# PROJECT MANUAL

## ELEMENTARY SCHOOLS – ADDITIONS

**WHITEHALL CITY SCHOOL DISTRICT**
**625 SOUTH YEARLING ROAD**
**WHITEHALL, OHIO 43213**

PREPARED FOR:

**WHITEHALL CITY SCHOOL DISTRICT**
**BRIAN HAMLER, SUPERINTENDENT**

**OHIO FACILITIES CONSTRUCTION COMMISSION**
**RICHARD HICKMAN, DIRECTOR**

CONSTRUCTION MANAGER:

**RUSCILLI CONSTRUCTION, INC.**
**2041 ARLINGATE LANE**
**COLUMBUS, OHIO 43228**

PREPARED BY:


**Schorr Architects, Inc.**
*Architect*
230 Bradenton Ave.
Dublin, OH 43017
614-798-2096

**Roger D. Fields & Assoc.**
*Mechanical/Electrical Consultant*
4588 Kenny Road
Columbus, OH 43220
614-451-2248

**Sands Decker CPS LLC**
*Civil Consultant*
1495 Old Henderson Rd.
Columbus, OH 43220
614-459-6992

**SMBH, Inc.**
*Structural Consultant*
1166 Dublin Rd., Ste. 200
Columbus, OH 4325
614-481-9800

**Osborn Engineering, Inc.**
*Technology Consultant*
1100 Superior Ave., Ste. 300
Cleveland, OH 44115
216-861-2020


BID SET 12/2/13

TABLE OF CONTENTS
WHITEHALL CITY SCHOOL DISTRICT
ELEMENTARY SCHOOLS - ADDITIONS
BID SET 12/2/13

**SPECIFICATIONS GROUP**

***Facility Construction Subgroup***

**DIVISION 02 – EXISTING CONDITIONS**
024113 SELECTIVE SITE DEMOLITION

**DIVISION 03 - CONCRETE**
033000 CAST-IN-PLACE CONCRETE
034100 PRECAST STRUCTURAL CONCRETE

**DIVISION 04 - MASONRY**
042000 UNIT MASONRY

**DIVISION 05 - METALS**
051200 STRUCTURAL STEEL FRAMING
052100 STEEL JOISTS FRAMING
053100 STEEL DECKING

**DIVISION 06 - WOOD, PLASTICS, AND COMPOSITES**
061053 MISCELLANEOUS ROUGH CARPENTRY
061600 SHEATHING

**DIVISION 07 - THERMAL AND MOISTURE PROTECTION**
071900 WATER REPELLENTS
072100 THERMAL INSULATION
075423 THERMOPLASTIC POLYOLEFIN (TPO) ROOFING
077100 ROOF SPECIALTIES
079200 JOINT SEALANTS

**DIVISION 08 - OPENINGS**
081113 HOLLOW METAL FRAMES
081416 FLUSH WOOD DOORS
084113 ALUMINUM-FRAMED ENTRANCES AND STOREFRONTS
084413 GLAZED ALUMINUM CURTAIN WALLS
085113 ALUMINUM WINDOWS
087100 DOOR HARDWARE
088000 GLAZING

**DIVISION 09 - FINISHES**
092216 NON-STRUCTURAL METAL FRAMING
092900 GYPSUM BOARD
095113 ACOUSTICAL PANEL CEILINGS
096513 RESILIENT BASE AND ACCESSORIES
096519 RESILIENT TILE FLOORING
096543 LINOLEUM FLOORING
096813 TILE CARPETING
099000 PAINTING AND COATINGS

**DIVISION 10 - SPECIALTIES**
101100 VISUAL DISPLAY SURFACES
101400 SIGNAGE
104413 FIRE EXTINGUISHER CABINETS
104416 FIRE EXTINGUISHERS
107315 PRE-ENGINEERED ALUMINUM LIGHT SHELF

**DIVISION 12 - FURNISHINGS**
122113 HORIZONTAL LOUVER BLINDS
123200 MANUFACTURED WOOD CASEWORK

**DIVISION 21 – FIRE SUPPRESSION**
210500 COMMON WORK RESULTS FOR SUPPRESSION
210506 FIRE-SUPPRESSION SUBMITTALS
210507 FIRE-SUPPRESSION OPERATING AND MAINTENANCE MANUALS
210515 FIRE-SUPPRESSION SLEEVES
210523 GENERAL-DUTY VALVES FOR WATER-BASED FIRE-SUPPRESSION PIPING & EQUIPMENT
210529 HANGERS & SUPPORTS FOR FIRE-SUPPRESSION PIPING & EQUIPMENT
210553 IDENTIFICATION FOR FIRE-SUPPRESSION PIPING AND EQUIPMENT
210560 REQUIREMENTS FOR COMPLETION OF FIRE-SUPPRESSION WORK
211000 WATER-BASED FIRE SUPPRESSION SYSTEMS
211313 WET-PIPE SPRINKLER SYSTEMS

**DIVISION 22 – PLUMBING**
220500 COMMON WORK RESULTS FOR PLUMBING
220505 PLUMBING EXCAVATION AND BACKFILL
220506 PLUMBING SUBMITTALS
220507 PLUMBING OPERATING AND MAINTENANCE MANUALS
220515 PLUMBING SLEEVES
220523 GENERAL-DUTY VALVES FOR PLUMBING PIPING
220529 HANGERS & SUPPORTS FOR PLUMBING PIPING & EQUIPMENT
220553 IDENTIFICATION FOR PLUMBING PIPING AND EQUIPMENT
220560 REQUIREMENTS FOR COMPLETION OF PLUMBING WORK

220576 FACILITY DRAINAGE PIPING CLEANOUTS
220700 PLUMBING INSULATION
221000 PLUMBING PIPING AND PUMPS
221116 DOMESTIC WATER PIPING
221119 DOMESTIC WATER PIPING SPECIALTIES
221316 SANITARY WASTE AND VENT PIPING
221400 FACILITY STORM DRAINAGE
224000 PLUMBING FIXTURES

**DIVISION 23 – HEATING, VENTILATING AND AIR CONDITIONING (HVAC)**
230500 COMMON WORK RESULTS FOR HVAC
230503 HVAC LUBRICATION AND PACKING
230504 HVAC ACCESS PANELS
230506 HVAC SUBMITTALS
230507 HVAC OPERATING AND MAINTENANCE MANUALS
230515 HVAC SLEEVES
230516 EXPANSION FITTINGS AND LOOPS FOR HVAC PIPING
230523 GENERAL-DUTY VALVES FOR HVAC PIPING
230529 HANGERS & SUPPORTS FOR HVAC PIPING & EQUIPMENT
230548 VIBRATION & SEISMIC CONTROLS FOR HVAC PIPING & EQUIPMENT
230553 IDENTIFICATION FOR HVAC PIPING AND EQUIPMENT
230560 REQUIREMENTS FOR COMPLETION OF HVAC WORK
230593 TESTING, ADJUSTING, AND BALANCING FOR HVAC
230700 HVAC INSULATION
230800 COMMISSIONING OF HVAC
230900 INSTRUMENTATION AND CONTROL FOR HVAC (ELECTRICAL COORDINATION)
230923 DIRECT-DIGITAL CONTROL SYSTEM FOR HVAC
230993 SEQUENCE OF OPERATIONS FOR HVAC CONTROLS
232000 HVAC PIPING AND PUMPS
232100 HYDRONIC PIPING AND PUMPS
232300 REFRIGERANT PIPING
233100 HVAC DUCTS AND CASINGS (HANGERS AND SUPPORTS)
233113 METAL DUCTS (LOW-VELOCITY)
233300 AIR DUCT ACCESSORIES
233313 DAMPERS
233600 AIR TERMINAL UNITS
233700 AIR OUTLETS AND INLETS
237400 PACKAGED OUTDOOR HVAC EQUIPMENT
238143 AIR-SOURCE UNITARY HEAT PUMPS
238239.13 CABINET UNIT HEATERS

**DIVISION 26 – ELECTRICAL**
260500 COMMON WORK RESULTS FOR ELECTRICAL

260501 ELECTRICAL DEMOLITION AND RENOVATION
260506 ELECTRICAL SUBMITTALS
260507 ELECTRICAL OPERATING AND MAINTENANCE MANUALS
260508 TEMPORARY LIGHTING AND POWER
260511 EQUIPMENT HOOK-UP AND FINAL CONNECTIONS
260515 ELECTRICAL SLEEVES
260519 LOW-VOLTAGE ELECTRICAL POWER CONDUCTORS & CABLES
260526 GROUNDING AND BONDING FOR ELECTRICAL SYSTEMS
260529 HANGERS AND SUPPORTS FOR ELECTRICAL SYSTEMS
260533 RACEWAY AND BOXES FOR ELECTRICAL SYSTEMS
260553 IDENTIFICATION FOR ELECTRICAL SYSTEMS
260560 REQUIREMENTS FOR COMPLETION OF ELECTRICAL WORK
260593 TESTING, ADJUSTING, AND BALANCING FOR ELECTRICAL
260800 COMMISSIONING OF ELECTRICAL
260900 INSTRUMENTATION & CONTROL FOR ELECTRICAL SYSTEMS
260923 LIGHTING CONTROL DEVICES
262726 WIRING DEVICES
262800 LOW-VOLTAGE CIRCUIT PROTECTIVE DEVICES
262913 ENCLOSED CONTROLLERS
262923 VARIABLE-FREQUENCY MOTOR CONTROLLERS
265000 LIGHTING
265551 CLASSROOM LIGHTING

**DIVISION 27 – TECHNOLOGY**
270500 COMMON WORK RESULTS FOR TECHNOLOGY
270504 PATHWAYS FOR COMMUNICATIONS
270505 TECHNOLOGY FIRE STOPPING
270526 TECHNOLOGY GROUNDING SYSTEM
271000 STRUCTURED CABLING SYSTEM
275127 CLASSROOM AUDIO VISUAL SYSTEM

**DIVISION 28 – ELECTRONIC SAFETY AND SECURITY**
283100 FIRE DETECTION AND ALARM

**DIVISION 31 – EARTHWORK**
311000 SITE CLEARING
312000 EARTH MOVING
312213 ROUGH GRADING
312500 EROSION & SEDIMENT CONTROL

**DIVISION 32 – EXTERIOR IMPROVEMENTS**
321216 ASPHALT PAVING
321313 CONCRETE PAVING
321723 PAVEMENT MARKING
329119 LANDSCAPE GRADING

329219 SEEDING

**DIVISION 33 – UTILITIES**
331000 WATER UTILITIES
333000 SANITARY SEWERAGE UTILITIES
334100 STORM UTILITY DRAINAGE PIPING

END OF TABLE OF CONTENTS VOLUME II

# SECTION 024113 – SELECTIVE SITE DEMOLITION

## PART 1 - GENERAL

### 1.1 SUMMARY

A. Section Includes:

1. Demolition of structures, paving, and utilities.
2. Filling voids created as a result of removals or demolition.

B. Related Requirements:

1. Section 31 10 00 – Site Clearing
2. Section 31 20 00 – Earth Moving
3. Section 31 25 00 – Erosion & Sediment Controls

### 1.2 REGULATORY REQUIREMENTS

A. Conform to applicable State and local codes for demolition of structures, safety of adjacent structures, dust control, runoff control, and pollution prevention.

B. Obtain required permits and licenses from appropriate authorities. Pay associated fees including disposal charges.

C. Notify affected utility companies before starting work and comply with their requirements.

D. Do not close or obstruct public or private roadways, sidewalks, or fire hydrants without appropriate permits or written authorization.

E. If hazardous, contaminated materials, or other environmental related conditions are discovered, stop work immediately and notify the Construction Manager for action to be taken. Do not resume work until specifically authorized by the Construction Manager.

F. Test soils around buried tanks for contamination. Coordinate notification for mobilization to site and required observation of tank removal with Construction Manager.

### 1.3 SUBMITTALS

A. Project Record Documents: Accurately record actual locations of capped utilities and subsurface obstructions that will remain after demolition. Submit record as part of closeout submittals.

### 1.4 PROJECT CONDITIONS

A. Structures to be demolished will be discontinued in use and vacated prior to start of work.

B. Owner assumes no responsibility for condition of structures to be demolished.

C. Conditions existing at time of inspection for bidding purposes will be maintained by Owner as reasonably practical. Variations within structures may occur by Owner's removal and salvage operations prior to start of demolition work.

D. Unless otherwise indicated in Contract Documents or specified by the Owner, items of salvageable value to Contractor shall be removed from site and structures. Storage or sale of removed items on site will not be permitted and shall not interfere with other work specified.

E. Explosives shall not be brought to site or used.

## PART 2 - PRODUCTS

### 2.1 FILL MATERIALS

A. Fill material shall be as specified in Section 31 20 00 Earth Moving.

## PART 3 - EXECUTION

### 3.1 PREPARATION

A. Provide, erect, and maintain erosion control devices, temporary barriers, and security devices at locations indicated on Construction Drawings.

B. Protect existing landscaping materials, appurtenances, and structures, which are not to be demolished. Repair damage to existing items to remain caused by demolition operations. Repair shall meet or exceed existing conditions and shall be coordinated with the Construction Manager.

C. Prevent movement or settlement of adjacent structures. Provide bracing and shoring as necessary.

D. Mark location of utilities. Protect and maintain in safe and operable condition utilities that are to remain. Prevent interruption of existing utility service to occupied or used facilities, except when authorized in writing by authorities having jurisdiction. Provide temporary services during interruptions to existing utilities as acceptable to governing authorities and Owner.

E. Notify adjacent property owners of work that may affect their property, potential noise, utility outages, or other disruptions.

F. Obtain written permission from adjacent property owners when demolition equipment will traverse, infringe upon, or limit access to their property. Coordinate notice with Owner.

G. Existing Utilities: Locate, identify, disconnect, and seal or cap off at source indicated utilities serving buildings and structures to be demolished.

1. Contractor will arrange to shut off indicated utilities with respective utility companies.

2. If removal or relocation of utility services will affect adjacent occupied buildings, then provide temporary utilities that bypass buildings and structures to be demolished and that maintain continuity of service to other buildings and structures.
3. Remove utilities to source per the requirements of the authorities having jurisdiction.
4. Where utilities are removed, also remove all protective encasements and conduit.

H. Existing Utilities: Do not start demolition work until utility disconnecting, sealing and removal to source have been completed and verified in writing.

3.2 GENERAL DEMOLITION REQUIREMENTS

A. Conduct demolition to minimize interference with adjacent structures or pavements to remain.

B. Cease operations immediately if adjacent structures appear to be in danger. Notify construction manager. Do not resume operations until approved by construction manager.

C. Conduct operations with minimum of interference to public or private access. Maintain ingress and egress at all times.

D. Use water to minimize dust. Provide hoses and water connections for this purpose.

E. Comply with governing regulations pertaining to environmental protection.

F. Clean adjacent structures and improvements of dust, dirt, and debris caused by demolition operations. Return adjacent areas to condition existing prior to start of work.

G. Keep public streets free of mud, dirt, dust and other debris.

3.3 DEMOLITION

A. Demolish site improvements designated to be removed as shown on the drawings. Site improvements shall include but not be limited to structures, retaining walls, foundations, pavements, curbs and gutters, drainage structures, utilities, signage or landscaping.

B. Disconnect and cap or remove utilities to be abandoned as shown on the drawings.

C. Fill or remove underground tanks, piping, and appurtenances as specified.

D. Demolish buildings completely and remove from site using methods as required to complete work within limitations of governing regulations. Small structures may be removed intact when acceptable to Owner and authorities having jurisdiction.

E. Locate demolition equipment and remove materials to prevent excessive loading to supporting walls, floors, or framing.

F. Demolish and remove any concrete and masonry slabs or structures visible on the surface or identified on the drawing to be removed.

3.4 FILLING BASEMENTS AND VOIDS

A. Completely fill below grade areas and voids resulting from demolition or removal of structures, underground fuel storage tanks, wells, cisterns, etc., using materials specified in section 31 20 00 Earth Moving.

B. Areas to be filled shall be free of standing water, frost, frozen or unsuitable material, trash, and debris prior to fill placement.

C. Place fill materials in accordance with Section 31 20 00 Earth Moving unless subsequent excavation for new work is required.

D. Grade surface to match adjacent grades and to provide flow of surface drainage after fill placement and compaction.

3.5 DISPOSAL OF DEMOLISHED MATERIALS

A. Remove from site debris, rubbish, and other materials resulting from demolition operations. Leave areas of work in clean condition.

B. No burning of any material, debris, or trash on-site or off-site will be allowed except when allowed by appropriate governing authority and Owner. If allowed as stated above, burning shall be performed in manner prescribed by governing authority. Attend burning materials until fires have burned out and have been completely extinguished.

C. Transport materials removed from demolished structures with appropriate vehicles and dispose off-site to areas that are approved for disposal by governing authorities and appropriate property owners.

END OF SECTION 024100

# SECTION 033000 - CAST-IN-PLACE CONCRETE

## PART 1 - GENERAL

### 1.1 RELATED DOCUMENTS

A. Drawings and general provisions of the Contract, including General and Supplementary Conditions and Division 01 Specification Sections, apply to this Section.

### 1.2 SUMMARY

A. This Section specifies cast-in place concrete, including formwork, reinforcement, concrete materials, mixture design, placement procedures, and finishes for the following:

1. Footings.
2. Slabs-on-grade.
3. Grade beams.

B. Related Sections include the following:

1. Division 03 Section "Architectural Concrete" for general building applications of specially finished formed concrete.
2. Division 31 Section "Earth Moving" for drainage fill under slabs-on-grade.
3. Division 32 Section "Concrete Paving" for concrete pavement and walks.
4. Division 32 Section "Decorative Concrete Paving" for decorative concrete pavement and walks.

### 1.3 DEFINITIONS

A. Cementitious Materials: Portland cement alone or in combination with one or more of the following: fly ash and other pozzolans, ground granulated blast-furnace slag, and silica fume; subject to compliance with requirements.

### 1.4 SUBMITTALS

A. Product Data: For each type of product indicated.

B. Design Mixtures: For each concrete mixture. Submit alternate design mixtures when characteristics of materials, Project conditions, weather, test results, or other circumstances warrant adjustments.

1. Indicate amounts of mixing water to be withheld for later addition at Project site.

C. Steel Reinforcement Shop Drawings: Placing drawings that detail fabrication, bending, and placement, prepared according to ACI 315, “Details and Detailing of Concrete Reinforcement.”

Include bar sizes, lengths, material, grade, bar schedules, stirrup spacing, bent bar diagrams, bar arrangement, splices and laps, mechanical connections, tie spacing, hoop spacing, and supports for concrete reinforcement. Include special reinforcement required for openings through concrete structures.

D. Material Test Reports: From a qualified testing agency, indicating compliance with requirements indicated, based on comprehensive testing of current materials.

1. Aggregates. Include service record data indicating absence of deleterious expansion of concrete due to alkali aggregate reactivity.

E. Material Certificates: For each of the following, signed by manufacturers:

1. Cementitious materials.
2. Admixtures.
3. Form materials and form-release agents.
4. Steel reinforcement and accessories.
5. Fiber reinforcement.
6. Curing compounds.
7. Floor and slab treatments.
8. Bonding agents.
9. Adhesives.
10. Vapor retarders.
11. Semi rigid joint filler.
12. Joint-filler strips.
13. Repair materials.

F. Floor surface flatness and levelness measurements to determine compliance with specified tolerances.

G. Field quality-control test and inspection reports.

## 1.5 QUALITY ASSURANCE

A. Testing Agency Qualifications: An independent agency, acceptable to authorities having jurisdiction, qualified according to ASTM C 1077 and ASTM E 329 for testing indicated, as documented according to ASTM E 548.

1. Personnel conducting field tests shall be qualified as ACI Concrete Field Testing Technician, Grade 1, according to ACI CP-01 or an equivalent certification program.
2. Personnel performing laboratory tests shall be ACI-certified Concrete Strength Testing Technician and Concrete Laboratory Testing Technician - Grade I. Testing Agency laboratory supervisor shall be an ACI-certified Concrete Laboratory Testing Technician - Grade II.

B. Source Limitations: Obtain each type or class of cementitious material of the same brand from the same manufacturer's plant, obtain aggregate from one source, and obtain admixtures through one source from a single manufacturer.

C. ACI Publications: Comply with the following unless more stringent provisions are indicated:

1. ACI 301, "Specification for Structural Concrete," Sections 1 through 5.
2. ACI 117, "Specifications for Tolerances for Concrete Construction and Materials."

D. Concrete Testing Service: Engage a qualified independent testing agency to perform material evaluation tests and to design concrete mixtures.

## 1.6 DELIVERY, STORAGE, AND HANDLING

A. Steel Reinforcement: Deliver, store, and handle steel reinforcement to prevent bending and damage.

# PART 2 - PRODUCTS

## 2.1 MANUFACTURERS

A. In other Part 2 articles where titles below introduce lists, the following requirements apply to product selection:

1. Available Products: Subject to compliance with requirements, products that may be incorporated into the Work include, but are not limited to, products specified.
2. Available Manufacturers: Subject to compliance with requirements, manufacturers offering products that may be incorporated into the Work include, but are not limited to, manufacturers specified.

## 2.2 FORM-FACING MATERIALS

A. Rough-Formed Finished Concrete: Plywood, lumber, metal, or another approved material. Provide lumber dressed on at least two edges and one side for tight fit.

B. Chamfer Strips: Wood, metal, PVC, or rubber strips, ¾ by ¾ inch minimum.

C. Form-Release Agent: Commercially formulated form-release agent that will not bond with, stain, or adversely affect concrete surfaces and will not impair subsequent treatments of concrete surfaces.

1. Formulate form-release agent with rust inhibitor for steel form-facing materials.

D. Form Ties: Factory-fabricated, removable or snap-off metal or glass-fiber-reinforced plastic form ties designed to resist lateral pressure of fresh concrete on forms and to prevent spalling of concrete on removal.

1. Furnish units that will leave no corrodible metal closer than 1 inch to the plane of exposed concrete surface.
2. Furnish ties that, when removed, will leave holes no larger than 1 inch in diameter in concrete surface.
3. Furnish ties with integral water-barrier plates to walls indicated to receive dampproofing or waterproofing.

## 2.3 STEEL REINFORCEMENT

A. Reinforcing Bars: ASTM A 615, Grade 60, deformed.

B. Plain-Steel Welded Wire Reinforcement: ASTM A 185, plain, fabricated from as-drawn steel wire into flat sheets.

C. Recycled Content of Steel Products: Postconsumer recycled content plus one-half of preconsumer recycled content not less than 90 percent.

## 2.4 FIBER REINFORCEMENT

A. Fibrous Reinforcement: Fibrillated Polypropylene Fibers conforming to ASTM C116 with a maximum cut length of ¾” and a dosage rate of 1.5 lbs/CY.

1. Available Products:

a. Euclid Chemcial Company (The); Fiberstrand F.
b. Sika Corporation, Inc.; SikaFiber PPF
c. Nycon, Inc.; ProCon F.
d. W.R. Grace & Co.; Grace Fibers

## 2.5 REINFORCEMENT ACCESSORIES

A. Joint Dowel Bars: ASTM A 615, Grade 60, plain-steel bars, cut bars true to length with ends square and free of burrs.

B. Bar Supports: Bolsters, chairs, spacers, and other devices for spacing, supporting, and fastening reinforcing bars and welded wire reinforcement in place. Manufacture bar supports from steel wire, plastic, or precast concrete according to CRSI's "Manual of Standard Practice" of greater compressive strength than concrete and as follows:

## 2.6 CONCRETE MATERIALS

A. Cementitious Material: Use the following cementitious materials, of the same type, brand, and source, throughout Project:

1. Portland Cement: ASTM C 150, Type I, gray. Supplement with the following:

a. Fly Ash: ASTM C 618, Class F.

B. Normal-Weight Aggregates: ASTM C 33, uniformly graded, and as follows:

1. Class: Severe weathering region, but not less than 3S.
2. Nominal Maximum Aggregate Size: 3/4 inch.
3. Fine Aggregate: Free of materials with deleterious reactivity to alkali in cement.

C. Water: ASTM C 94 and potable.

## 2.7 ADMIXTURES

A. Air-Entraining Admixture: ASTM C 260.

B. Chemical Admixtures: Provide admixtures certified by manufacturer to be compatible with other admixtures and that will not contribute water-soluble chloride ions exceeding those permitted in hardened concrete. Do not use calcium chloride or admixtures containing calcium chloride.

1. Water-Reducing Admixture: ASTM C 494, Type A.
2. Retarding Admixture: ASTM C 494, Type B.
3. Water-Reducing and Retarding Admixture: ASTM C 494, Type D.
4. High-Range, Water-Reducing Admixture: ASTM C 494, Type F.

## 2.8 CURING MATERIALS

A. Evaporation Retarder: Waterborne, monomolecular film forming, manufactured for application to fresh concrete.

1. Available Products:

a. Axim Concrete Technologies; Cimfilm.
b. Burke by Edoco; BurkeFilm.
c. ChemMasters; Spray-Film.
d. Conspec Marketing & Manufacturing Co., Inc., a Dayton Superior Company; Aquafilm.
e. Dayton Superior Corporation; Sure Film.
f. Euclid Chemical Company (The); Eucobar.
g. Kaufman Products, Inc.; Vapor Aid.
h. Lambert Corporation; Lambco Skin.
i. L&M Construction Chemicals, Inc.; E-Con.
j. MBT Protection and Repair, Div. of ChemRex; Confilm.
k. Meadows, W. R., Inc.; Sealtight Evapre.
l. Metalcrete Industries; Waterhold.
m. Nox-Crete Products Group, Kinsman Corporation; Monofilm.
n. Sika Corporation, Inc.; SikaFilm.
o. Symons Corporation, a Dayton Superior Company; Finishing Aid.
p. Unitex; Pro-Film.
q. US Mix Products Company; US Spec Monofilm ER.
r. Vexcon Chemicals, Inc.; Certi-Vex EnvioAssist.

B. Absorptive Cover: AASHTO M 182, Class 2, burlap cloth made from jute or kenaf, weighing approximately 9 oz./sq. yd. when dry.

C. Moisture-Retaining Cover: ASTM C 171, polyethylene film or white burlap-polyethylene sheet.

D. Water: Potable.

E. Clear, Waterborne, Membrane-Forming Curing Compound: ASTM C 309, Type 1, Class B, dissipating.

1. Available Products:

a. Anti-Hydro International, Inc.; AH Curing Compound #2 DR WB.
b. Burke by Edoco; Aqua Resin Cure.
c. ChemMasters; Safe-Cure Clear.
d. Conspec Marketing & Manufacturing Co., Inc., a Dayton Superior Company; W.B. Resin Cure.
e. Dayton Superior Corporation; Day Chem Rez Cure (J-11-W).
f. Euclid Chemical Company (The); Kurez DR VOX.
g. Kaufman Products, Inc.; Thinfilm 420.
h. Lambert Corporation; Aqua Kure-Clear.
i. L&M Construction Chemicals, Inc.; L&M Cure R.
j. Meadows, W. R., Inc.; 1100 Clear.
k. Nox-Crete Products Group, Kinsman Corporation; Resin Cure E.
l. Symons Corporation, a Dayton Superior Company; Resi-Chem Clear Cure.
m. Tamms Industries, Inc.; Horncure WB 30.
n. Unitex; Hydro Cure 309.
o. US Mix Products Company; US Spec Maxcure Resin Clear.
p. Vexcon Chemicals, Inc.; Certi-Vex Enviocure 100.

## 2.9 RELATED MATERIALS

A. Expansion- and Isolation-Joint-Filler Strips: ASTM D 1751, asphalt-saturated cellulosic fiber or ASTM D 1752, cork or self-expanding cork.

B. Semirigid Joint Filler: Two-component, semirigid, 100 percent solids, epoxy resin with a Type A shore durometer hardness of 80 per ASTM D 2240.

C. Bonding Agent: ASTM C 1059, Type II, non-redispersible, acrylic emulsion or styrene butadiene.

## 2.10 REPAIR MATERIALS

A. Repair Underlayment: Cement-based, polymer-modified, self-leveling product that can be applied in thicknesses from 1/8 inch and that can be feathered at edges to match adjacent floor elevations.

1. Cement Binder: ASTM C 150, Portland cement or hydraulic or blended hydraulic cement as defined in ASTM C 219.
2. Primer: Product of underlayment manufacturer recommended for substrate, conditions, and application.
3. Aggregate: Well-graded, washed gravel, 1/8 to 1/4 inch or coarse sand as recommended by underlayment manufacturer.
4. Compressive Strength: Not less than 4100 psi at 28 days when tested according to ASTM C 109.

2.11 CONCRETE MIXTURES FOR BUILDING ELEMENTS,

Concrete Requirements and Location in Job:

| CLASS | ITEM OR STRUCTURE | COMPRESSIVE STRENGTH & OTHER REQUIREMENTS |
|---|---|---|
| I | Piers and Concrete not Otherwise Indicated | 3500 P.S.I. at 28 Days<br>Normal Weight Concrete:<br>Minimum Cementitious Material Content: ACI minimum requirements<br>Max W/C Ratio = 0.45<br>Mid-Range Water Reducer Required |
| II | Trench Footings, Footings, Grade Beams, Masonry Grout | 3000 P.S.I. at 38 Days |
| III | Interior Floor Slabs Scheduled to Receive Mud-Set Mosaic and Quarry Tile | 3500 P.S.I. at 28 Days<br>Max W/C Ratio = 0.45<br>Mid-Range Water Reducer Required |
| IV | Lean Concrete Fill at Soft Soils of Over Excavation | 1500 P.S.I. at 28 Days |
| V | Exposed Interior Floor Slabs and Interior Slabs Scheduled to Receive Resilient, Thin Film, and Wood Flooring Finishes | 3500 P.S.I. at 28 Days<br>Max W/C Ratio = 0.45<br>Mid-Range Water Reducer Required |
| VI | Exterior Walks, Stoops, Steps, Aprons, and Curbs Exterior Formed Concrete Exposed to View; Exterior Concrete not Otherwise Indicated | 4000 P.S.I. at 28 Days<br>4.5%-7.5% Air Entrainment<br>Max W/C Ratio = 0.45 |
| VII | Topping over Precast | 3500 P.S.I at 28 Days<br>#8 Aggregate Maximum<br>Fibrillated Polypropylene Fibers |
| VIII | Metal Stair Pan Fill | 3500 P.S.I. at 28 Days<br>#8 Aggregate Maximum |

Submit concrete mixes for approval in accordance with ACI 301 before placing any concrete.

2.12 CONCRETE MIXTURES, GENERAL

A. Prepare design mixtures for each type and strength of concrete, proportioned on the basis of laboratory trial mixture or field test data, or both, according to ACI 301 and ACI 318 chapter 5.

1. Use a qualified independent testing agency for preparing and reporting proposed mixture designs based on laboratory trial mixtures.
2. Submit written reports to Architect of each proposed mix for each class of concrete at least 15 days prior to start of Work. Do not begin concrete production until proposed mix designs have been reviewed by Architect.

B. Cementitious Materials: Limit percentage, by weight, of cementitious materials other than Portland cement in concrete as follows:

1. Fly Ash: 15 percent.

C. Limit water-soluble, chloride-ion content in hardened concrete to 0.15 percent by weight of cement.

D. Admixtures: Use admixtures according to manufacturer's written instructions.

1. Use water-reducing or high-range water-reducing admixture in concrete, as required, for placement and workability.
2. Use water-reducing and retarding admixture when required by high temperatures, low humidity, or other adverse placement conditions.
3. Use water-reducing admixture in pumped concrete and concrete with a water-cementitious materials ratio below 0.50.

E. Air Content: For concrete elements subject to freezing and thawing, add air-entraining admixture at manufacturer's prescribed rate to result in concrete at point of placement having an air content as follows:

1. Air Content: 6 percent, plus or minus 1.5 percent at point of delivery for 3/4 inch (25mm) nominal maximum aggregate size.

F. Slump Limits: Proportion and design mixes to result in concrete slump at point of placement as follows:

1. Ramps, slabs, and sloping surfaces: Not more than 3 inches.
2. Reinforced foundation systems: Not less than 1 inch and not more than 3 inches.
3. Concrete containing high-range water-reducing admixture (superplasticizer): Not more than 8 inches after adding admixture to site verified 2-to-3-inch slump concrete.
4. Other concrete: Not more than 4 inches.

## 2.13 FABRICATING REINFORCEMENT

A. Fabricate steel reinforcement according to CRSI's "Manual of Standard Practice."

## 2.14 CONCRETE MIXING

A. Ready-Mixed Concrete: Measure, batch, mix, and deliver concrete according to ASTM C 94 and ASTM C 1116, and furnish batch ticket information.

1. When air temperature is between 85 and 90 deg F, reduce mixing and delivery time from 1-1/2 hours to 75 minutes; when air temperature is above 90 deg F, reduce mixing and delivery time to 60 minutes.

B. Project-Site Mixing: Measure, batch, and mix concrete materials and concrete according to ASTM C 94/C 94M. Mix concrete materials in appropriate drum-type batch machine mixer.

1. For mixer capacity of 1 cu. yd. or smaller, continue mixing at least 1-1/2 minutes, but not more than 5 minutes after ingredients are in mixer, before any part of batch is released.
2. For mixer capacity larger than 1 cu. yd., increase mixing time by 15 seconds for each additional 1 cu. yd.
3. Provide batch ticket for each batch discharged and used in the Work, indicating Project identification name and number, date, mixture type, mixture time, quantity, and amount of water added. Record approximate location of final deposit in structure.

## PART 3 - EXECUTION

### 3.1 FORMWORK

A. Design, erect, shore, brace, and maintain formwork, according to ACI 301, to support vertical, lateral, static, and dynamic loads, and construction loads that might be applied, until structure can support such loads.

B. Construct formwork so concrete members and structures are of size, shape, alignment, elevation, and position indicated, within tolerance limits of ACI 117.

C. Limit concrete surface irregularities, designated by ACI 347R as abrupt or gradual, as follows:

1. Class C, 1/2 inch for rough-formed finished surfaces.

D. Construct forms tight enough to prevent loss of concrete mortar.

E. Fabricate forms for easy removal without hammering or prying against concrete surfaces. Provide crush or wrecking plates where stripping may damage cast concrete surfaces. Provide top forms for inclined surfaces steeper than 1.5 horizontal to 1 vertical.

1. Install keyways, reglets, recesses, and the like, for easy removal.
2. Do not use rust-stained steel form-facing material.

F. Set edge forms, bulkheads, and intermediate screed strips for slabs to achieve required elevations and slopes in finished concrete surfaces. Provide and secure units to support screed strips; use strike-off templates or compacting-type screeds.

G. Provide temporary openings for cleanouts and inspection ports where interior area of formwork is inaccessible. Close openings with panels tightly fitted to forms and securely braced to prevent loss of concrete mortar. Locate temporary openings in forms at inconspicuous locations.

H. Chamfer exterior corners and edges of permanently exposed concrete.

I. Form openings, chases, offsets, sinkages, keyways, reglets, blocking, screeds, and bulkheads required in the Work. Determine sizes and locations from trades providing such items.

J. Clean forms and adjacent surfaces to receive concrete. Remove chips, wood, sawdust, dirt, and other debris just before placing concrete.

K. Retighten forms and bracing before placing concrete, as required, to prevent mortar leaks and maintain proper alignment.

L. Coat contact surfaces of forms with form-release agent, according to manufacturer's written instructions, before placing reinforcement.

## 3.2 EMBEDDED ITEMS

A. Place and secure anchorage devices and other embedded items required for adjoining work that is attached to or supported by cast-in-place concrete. Use setting drawings, templates, diagrams, instructions, and directions furnished with items to be embedded.

1. Install anchor rods, accurately located, to elevations required and complying with tolerances in Section 7.5 of AISC's "Code of Standard Practice for Steel Buildings and Bridges."

## 3.3 REMOVING AND REUSING FORMS

A. General: Formwork for sides of beams, walls, columns, and similar parts of the Work that does not support weight of concrete may be removed after cumulatively curing at not less than 50 deg F for 24 hours after placing concrete, if concrete is hard enough to not be damaged by form-removal operations and curing and protection operations are maintained.

1. Determine compressive strength of in-place concrete by testing representative field- or laboratory-cured test specimens according to ACI 301.

B. Clean and repair surfaces of forms to be reused in the Work. Split, frayed, delaminated, or otherwise damaged form-facing material will not be acceptable for exposed surfaces. Apply new form-release agent.

C. When forms are reused, clean surfaces, remove fins and laitance, and tighten to close joints. Align and secure joints to avoid offsets. Do not use patched forms for exposed concrete surfaces unless approved by Architect.

## 3.4 VAPOR RETARDERS

A. Plastic Vapor Retarders: Place, protect, and repair vapor retarders according to ASTM E 1643 and manufacturer's written instructions.

1. Lap joints 6 inches and seal with manufacturer's recommended tape.

B. Bituminous Vapor Retarders: Place, protect, and repair vapor retarders according to manufacturer's written instructions.

## 3.5 STEEL REINFORCEMENT

A. General: Comply with CRSI's "Manual of Standard Practice" for placing reinforcement.

1. Do not cut or puncture vapor retarder. Repair damage and reseal vapor retarder before placing concrete.

B. Clean reinforcement of loose rust and mill scale, earth, ice, and other foreign materials that would reduce bond to concrete.

C. Accurately position, support, and secure reinforcement against displacement. Locate and support reinforcement with bar supports to maintain minimum concrete cover. Do not tack weld crossing reinforcing bars.

D. Set wire ties with ends directed into concrete, not toward exposed concrete surfaces.

E. Install welded wire reinforcement in longest practicable lengths on bar supports spaced to minimize sagging. Lap edges and ends of adjoining sheets at least one mesh spacing. Offset laps of adjoining sheet widths to prevent continuous laps in either direction. Lace overlaps with wire.

## 3.6 JOINTS

A. General: Construct joints true to line with faces perpendicular to surface plane of concrete.

B. Construction Joints: Install so strength and appearance of concrete are not impaired, at locations indicated or as approved by Architect.

1. Place joints perpendicular to main reinforcement. Continue reinforcement across construction joints, unless otherwise indicated. Do not continue reinforcement through sides of strip placements of floors and slabs.

C. Contraction Joints in Slabs-on-Grade: Form weakened-plane contraction joints, sectioning concrete into areas as indicated. Construct contraction joints for a depth equal to at least one-fourth of concrete thickness as follows:

1. Grooved Joints: Form contraction joints after initial floating by grooving and finishing each edge of joint to a radius of 1/8 inch. Repeat grooving of contraction joints after applying surface finishes. Eliminate groover tool marks on concrete surfaces.
2. Sawed Joints: Form contraction joints with power saws equipped with shatterproof abrasive or diamond-rimmed blades. Cut 1/8-inch wide joints into concrete when cutting action will not tear, abrade, or otherwise damage surface and before concrete develops random contraction cracks.

D. Isolation Joints in Slabs-on-Grade: After removing formwork, install joint-filler strips at slab junctions with vertical surfaces, such as column pedestals, foundation walls, other locations, as indicated.

1. Extend joint-filler strips full width and depth of joint, terminating flush with finished concrete surface, unless otherwise indicated.
2. Terminate full-width joint-filler strips not less than 1/2 inch or more than 1 inch below finished concrete surface where joint sealants, specified in Division 07 Section "Joint Sealants," are indicated.
3. Install joint-filler strips in lengths as long as practicable. Where more than one length is required, lace or clip sections together.

E. Doweled Joints: Install dowel bars and support assemblies at joints where indicated. Provide dowel sleeve to prevent concrete bonding to one side of joint.

## 3.7 CONCRETE PLACEMENT

A. Before placing concrete, verify that installation of formwork, reinforcement, and embedded items is complete and that required inspections have been performed.

B. Do not add water to concrete during delivery, at Project site, or during placement unless approved by Architect.

1. Do not add water to concrete after adding high-range water-reducing admixtures to mixture.

C. Deposit concrete continuously in one layer or in horizontal layers no deeper than 24 inches and of such thickness that no new concrete will be placed on concrete that has hardened enough to cause seams or planes of weakness. If a section cannot be placed continuously, provide construction joints as indicated. Deposit concrete to avoid segregation.

1. Deposit concrete in horizontal layers of depth to not exceed formwork design pressures and in a manner to avoid inclined construction joints.
2. Consolidate placed concrete with mechanical vibrating equipment according to ACI 301 and ACI 309R.
3. Do not use vibrators to transport concrete inside forms. Insert and withdraw vibrators vertically at uniformly spaced locations to rapidly penetrate placed layer and at least 6 inches into preceding layer. Do not insert vibrators into lower layers of concrete that have begun to lose plasticity. At each insertion, limit duration of vibration to time necessary to consolidate concrete and complete embedment of reinforcement and other embedded items without causing mixture constituents to segregate.

D. Deposit and consolidate concrete for floors and slabs in a continuous operation, within limits of construction joints, until placement of a panel or section is complete.

1. Consolidate concrete during placement operations so concrete is thoroughly worked around reinforcement and other embedded items and into corners.
2. Maintain reinforcement in position on chairs during concrete placement.
3. Screed slab surfaces with a straightedge and strike off to correct elevations.
4. Slope surfaces uniformly to drains where required.

5. Begin initial floating using bull floats or darbies to form a uniform and open-textured surface plane, before excess bleedwater appears on the surface. Do not further disturb slab surfaces before starting finishing operations.

E. Cold-Weather Placement: Comply with ACI 306.1 and as follows. Protect concrete work from physical damage or reduced strength that could be caused by frost, freezing actions, or low temperatures.

1. When average of the highest and lowest temperature during the period from midnight to midnight is expected to fall below 40 deg F for three successive days, maintain delivered concrete mixture temperature within the temperature range required by ACI 301.
2. Do not use frozen materials or materials containing ice or snow. Do not place concrete on frozen subgrade or on subgrade containing frozen materials.
3. Do not use calcium chloride, salt, or other materials containing antifreeze agents or chemical accelerators unless otherwise specified and approved in mixture designs.

F. Hot-Weather Placement: Comply with ACI 301 and ACI 305R and as follows:

1. Maintain concrete temperature below 90 deg F at time of placement. Chilled mixing water or chopped ice may be used to control temperature, provided water equivalent of ice is calculated to total amount of mixing water. Using liquid nitrogen to cool concrete is Contractor's option.
2. Fog-spray forms, steel reinforcement, and subgrade just before placing concrete. Keep subgrade uniformly moist without standing water, soft spots, or dry areas.
3. Cover steel reinforcement with water-soaked burlap so steel temperature will not exceed ambient air temperature immediately before embedding in concrete.

## 3.8 FINISHING FORMED SURFACES

A. Rough-Formed Finish: As-cast concrete texture imparted by form-facing material with tie holes and defects repaired and patched. Remove fins and other projections that exceed specified limits on formed-surface irregularities.

1. Apply to concrete surfaces not exposed to view.

B. Smooth-Formed Finish: As-cast concrete texture imparted by form-facing material, arranged in an orderly and symmetrical manner with a minimum of seams. Repair and patch tie holes and defects. Remove fins and other projections that exceed specified limits on formed-surface irregularities.

1. Apply to concrete surfaces exposed to view or to be covered with a coating or covering material applied directly to concrete, such as waterproofing.

C. Related Unformed Surfaces: At tops of walls, horizontal offsets, and similar unformed surfaces adjacent to formed surfaces, strike off smooth and finish with a texture matching adjacent formed surfaces. Continue final surface treatment of formed surfaces uniformly across adjacent unformed surfaces, unless otherwise indicated.

3.9 FINISHING FLOORS AND SLABS

A. General: Comply with ACI 302.1R recommendations for screeding, restraightening, and finishing operations for concrete surfaces. Do not wet concrete surfaces.

B. Float Finish: Consolidate surface with power-driven floats or by hand floating if area is small or inaccessible to power driven floats. Restraighten, cut down high spots, and fill low spots. Repeat float passes and restraightening until surface is left with a uniform, smooth, granular texture. Unless otherwise indicated, place floor drains ¾-inch below finish floor line. Uniformly slope slab surfaces to drains including drains in thickset quarry tile and ceramic tile areas. Start slope to drains 6-feet away from drain.

1. Apply float finish to surfaces to receive trowel finish.

C. Trowel Finish: After applying float finish, apply first troweling and consolidate concrete by hand or power-driven trowel. Continue troweling passes and restraighten until surface is free of trowel marks and uniform in texture and appearance. Grind smooth any surface defects that would telegraph through applied coatings or floor coverings.

1. Apply a trowel finish to surfaces indicated, exposed to view or to be covered with resilient flooring, carpet, thin-set ceramic or quarry tile set over a cleavage or waterproofing membrane.
2. Finish surfaces to the following tolerances, according to ASTM E 1155, for a randomly trafficked floor surface:

a. Trowel Finish 1: Typical Classroom, Corridors and Normal Sized Rooms (Under 1,000 sq.ft.):

1) Specified overall values of flatness, F(F) 25; and of levelness, F(L) 20; with minimum local values of flatness, F(F) 17; and of levelness, F(L) 14.

b. Trowel Finish 2: Large Rooms and Public Areas (Over 1,000 sq.ft.):

1) Specified overall values of flatness, F(F) 35; and of levelness, F(L) 25; with minimum local values of flatness, F(F) 24; and of levelness, F(L) 17.

c. Trowel Finish 3: Spaces with wood flooring:

1) Specified overall values of flatness, F(F) 45; and of levelness, F(L) 35; with minimum local values of flatness, F(F) 30; and of levelness, F(L) 24.

3. Trowel and Fine-Broom Finish: Apply a first trowel finish to surfaces indicated and to surfaces where ceramic or quarry tile is to be installed by thin-set method. While concrete is still plastic, slightly scarify surface with a fine broom.
4. Comply with flatness and levelness tolerances for trowel finished floor surfaces.

D. Nonslip Broom Finish: Apply a broom finish to exterior concrete platforms, steps, and ramps, and elsewhere as indicated.

1. Immediately after float finishing, slightly roughen trafficked surface by brooming with fiber-bristle broom perpendicular to main traffic route. Coordinate required final finish with Architect before application.

## 3.10 MISCELLANEOUS CONCRETE ITEMS

A. Filling In: Fill in holes and openings left in concrete structures, unless otherwise indicated, after work of other trades is in place. Mix, place, and cure concrete, as specified, to blend with in-place construction. Provide other miscellaneous concrete filling indicated or required to complete the Work.

B. Curbs: Provide monolithic finish to interior curbs by stripping forms while concrete is still green and by steel-troweling surfaces to a hard, dense finish with corners, intersections, and terminations slightly rounded.

C. Equipment Bases and Foundations: Provide machine and equipment bases and foundations as shown on Drawings. Set anchor bolts for machines and equipment at correct elevations, complying with diagrams or templates from manufacturer furnishing machines and equipment.

D. Steel Pan Stairs: Provide concrete fill for steel pan stair treads, landings, and associated items. Cast-in inserts and accessories as shown on Drawings. Screed, tamp, and trowel-finish concrete surfaces.

## 3.11 CONCRETE PROTECTING AND CURING

A. General: Protect freshly placed concrete from premature drying and excessive cold or hot temperatures. Comply with ACI 306.1 for cold-weather protection and ACI 301 and ACI 305R for hot-weather protection during curing.

B. Evaporation Retarder: Apply evaporation retarder to unformed concrete surfaces if hot, dry, or windy conditions cause moisture loss approaching 0.2 lb/sq. ft./h before and during finishing operations. Apply according to manufacturer's written instructions after placing, screeding, and bull floating or darbying concrete, but before float finishing.

C. Formed Surfaces: Cure formed concrete surfaces, including underside of beams, supported slabs, and other similar surfaces. If forms remain during curing period, moist cure after loosening forms. If removing forms before end of curing period, continue curing for the remainder of the curing period.

D. Unformed Surfaces: Begin curing immediately after finishing concrete. Cure unformed surfaces, including floors and slabs, concrete floor toppings, and other surfaces.

E. Cure concrete according to ACI 308.1, by one or a combination of the following methods:

1. Moisture Curing: Keep surfaces continuously moist for not less than seven days with the following materials:

   a. Water.
   b. Continuous water-fog spray.

c. Absorptive cover, water saturated, and kept continuously wet. Cover concrete surfaces and edges with 12-inch lap over adjacent absorptive covers.

2. Moisture-Retaining-Cover Curing: Cover concrete surfaces with moisture-retaining cover for curing concrete, placed in widest practicable width, with sides and ends lapped at least 12 inches, and sealed by waterproof tape or adhesive. Cure for not less than seven days. Immediately repair any holes or tears during curing period using cover material and waterproof tape.

a. Cure concrete surfaces to receive floor coverings with either a moisture-retaining cover or a curing compound that the manufacturer certifies will not interfere with bonding of floor covering used on Project..

3. Curing Compound: Apply uniformly in continuous operation by power spray or roller according to manufacturer's written instructions. Recoat areas subjected to heavy rainfall within three hours after initial application. Maintain continuity of coating and repair damage during curing period.

a. After curing period has elapsed, remove curing compound without damaging concrete surfaces by method recommended by curing compound manufacturer.

4. Curing and Sealing Compound: Apply uniformly to floors and slabs indicated in a continuous operation by power spray or roller according to manufacturer's written instructions. Recoat areas subjected to heavy rainfall within three hours after initial application. Repeat process 24 hours later and apply a second coat. Maintain continuity of coating and repair damage during curing period.

## 3.12 JOINT FILLING

A. Prepare, clean, and install joint filler according to manufacturer's written instructions.

1. Defer joint filling until concrete has aged at least six months. Do not fill joints until construction traffic has permanently ceased.

B. Remove dirt, debris, saw cuttings, curing compounds, and sealers from joints; leave contact faces of joint clean and dry.

C. Install semirigid joint filler full depth in saw-cut joints and at least 2 inches deep in formed joints. Overfill joint and trim joint filler flush with top of joint after hardening.

## 3.13 CONCRETE SURFACE REPAIRS

A. Defective Concrete: Repair and patch defective areas when approved by Architect. Remove and replace concrete that cannot be repaired and patched to Architect's approval.

B. Patching Mortar: Mix dry-pack patching mortar, consisting of one part Portland cement to two and one-half parts fine aggregate passing a No. 16 sieve, using only enough water for handling and placing.

C. Repairing Formed Surfaces: Surface defects include color and texture irregularities, cracks, spalls, air bubbles, honeycombs, rock pockets, fins and other projections on the surface, and stains and other discolorations that cannot be removed by cleaning.

1. Immediately after form removal, cut out honeycombs, rock pockets, and voids more than 1/2 inch in any dimension in solid concrete, but not less than 1 inch in depth. Make edges of cuts perpendicular to concrete surface. Clean, dampen with water, and brush-coat holes and voids with bonding agent. Fill and compact with patching mortar before bonding agent has dried. Fill form-tie voids with patching mortar or cone plugs secured in place with bonding agent.
2. Repair defects on surfaces exposed to view by blending white Portland cement and standard Portland cement so that, when dry, patching mortar will match surrounding color. Patch a test area at inconspicuous locations to verify mixture and color match before proceeding with patching. Compact mortar in place and strike off slightly higher than surrounding surface.
3. Repair defects on concealed formed surfaces that affect concrete's durability and structural performance as determined by Architect.

D. Repairing Unformed Surfaces: Test unformed surfaces, such as floors and slabs, for finish and verify surface tolerances specified for each surface. Correct low and high areas. Test surfaces sloped to drain for trueness of slope and smoothness; use a sloped template.

1. Repair finished surfaces containing defects. Surface defects include spalls, popouts, honeycombs, rock pockets, crazing and cracks in excess of 0.01 inch wide or that penetrate to reinforcement or completely through unreinforced sections regardless of width, and other objectionable conditions.
2. After concrete has cured at least 14 days, correct high areas by grinding.
3. Correct localized low areas during or immediately after completing surface finishing operations by cutting out low areas and replacing with patching mortar. Finish repaired areas to blend into adjacent concrete.
4. Correct other low areas scheduled to receive floor coverings with a repair underlayment. Prepare, mix, and apply repair underlayment and primer according to manufacturer's written instructions to produce a smooth, uniform, plane, and level surface. Feather edges to match adjacent floor elevations.
5. Correct other low areas scheduled to remain exposed with a repair topping. Cut out low areas to ensure a minimum repair topping depth of 1/4 inch to match adjacent floor elevations. Prepare, mix, and apply repair topping and primer according to manufacturer's written instructions to produce a smooth, uniform, plane, and level surface.
6. Repair defective areas, except random cracks and single holes 1 inch or less in diameter, by cutting out and replacing with fresh concrete. Remove defective areas with clean, square cuts and expose steel reinforcement with at least a 3/4-inch clearance all around. Dampen concrete surfaces in contact with patching concrete and apply bonding agent. Mix patching concrete of same materials and mixture as original concrete except without coarse aggregate. Place, compact, and finish to blend with adjacent finished concrete. Cure in same manner as adjacent concrete.
7. Repair random cracks and single holes 1 inch or less in diameter with patching mortar. Groove top of cracks and cut out holes to sound concrete and clean off dust, dirt, and loose particles. Dampen cleaned concrete surfaces and apply bonding agent. Place patching mortar before bonding agent has dried. Compact patching mortar and finish to match adjacent concrete. Keep patched area continuously moist for at least 72 hours.

E. Perform structural repairs of concrete, subject to Architect's approval, using epoxy adhesive and patching mortar.

F. Repair materials and installation not specified above may be used, subject to Architect's approval.

## 3.14 FIELD QUALITY CONTROL

A. Testing and Inspecting: Owner shall engage a qualified testing and inspecting agency to perform tests and inspections and to submit reports.

B. Special Inspections:

1. Steel reinforcement placement.
2. Steel reinforcement welding.
3. Headed bolts and studs.
4. Verification of use of required design mixture.
5. Concrete placement, including conveying and depositing.
6. Curing procedures and maintenance of curing temperature.
7. Verification of concrete strength before removal of shores and forms from beams and slabs.

C. Concrete Tests: Testing of composite samples of fresh concrete obtained according to ASTM C 172 shall be performed according to the following requirements:

1. Testing Frequency: Obtain at least one composite sample for each 100 cu. yd. or fraction thereof of each concrete mixture placed each day.

   a. When frequency of testing will provide fewer than five compressive-strength tests for each concrete mixture, testing shall be conducted from at least five randomly selected batches or from each batch if fewer than five are used.

2. Slump: ASTM C 143; one test at point of placement for each composite sample, but not less than one test for each day's pour of each concrete mixture. Perform additional tests when concrete consistency appears to change.
3. Air Content: ASTM C 231, pressure method, for normal-weight concrete; one test for each composite sample, but not less than one test for each day's pour of each concrete mixture.
4. Concrete Temperature: ASTM C 1064; one test hourly when air temperature is 40 deg F and below and when 80 deg F and above, and one test for each composite sample.
5. Compression Test Specimens: ASTM C 31.

   a. Cast and laboratory cure two sets of two standard cylinder specimens for each composite sample.

6. Compressive-Strength Tests: ASTM C 39; test one set of two laboratory-cured specimens at 7 days and one set of two laboratory-cured specimens at 28 days. Hold one cylinder for testing at 56 days if required.

a. Test one set of two field-cured specimens at 7 days and two field-cured specimens at 28 days.
b. A compressive-strength test shall be the average compressive strength from a set of two specimens obtained from same composite sample and tested at age indicated.

7. When strength of field-cured cylinders is less than 85 percent of companion laboratory-cured cylinders, Contractor shall evaluate operations and provide corrective procedures for protecting and curing in-place concrete.
8. Strength of each concrete mixture will be satisfactory if every average of any three consecutive compressive-strength tests equals or exceeds specified compressive strength and no compressive-strength test value falls below specified compressive strength by more than 500 psi.
9. Test results shall be reported in writing to Architect, concrete manufacturer, and Contractor within 48 hours of testing. Reports of compressive-strength tests shall contain Project identification name and number, date of concrete placement, name of concrete testing and inspecting agency, location of concrete batch in Work, design compressive strength at 28 days, concrete mixture proportions and materials, compressive breaking strength, and type of break for both 7- and 28-day tests.
10. Nondestructive Testing: Impact hammer, sonoscope, or other nondestructive device may be permitted by Architect but will not be used as sole basis for approval or rejection of concrete.
11. Additional Tests: Testing and inspecting agency shall make additional tests of concrete when test results indicate that slump, air entrainment, compressive strengths, or other requirements have not been met, as directed by Architect. Testing and inspecting agency may conduct tests to determine adequacy of concrete by cored cylinders complying with ASTM C 42 or by other methods as directed by Architect.
12. Additional testing and inspecting, at Contractor's expense, will be performed to determine compliance of replaced or additional work with specified requirements.
13. Correct deficiencies in the Work that test reports and inspections indicate dos not comply with the Contract Documents.

D. Measure floor and slab flatness and levelness according to ASTM E 1155 within 24 hours of finishing.

END OF SECTION 033000

# SECTION 034100 - PRECAST STRUCTURAL CONCRETE

## PART 1 - GENERAL

### 1.1 RELATED DOCUMENTS

A. Drawings and general provisions of the Contract, including General and Supplementary Conditions and Division 01 Specification Sections, apply to this Section.

### 1.2 SUMMARY

A. This Section includes plant-precast structural concrete units, including the following:

1. Hollow-core slab units.

B. Related Sections include the following:

1. Division 03 Section "Cast-in-Place Concrete" for concrete topping and placing connection anchors in concrete.
2. Division 04 Section "Unit Masonry" for inserts or anchorages required for precast concrete slab connections.
3. Division 05 Section "Structural Steel Framing" for furnishing and installing connections attached to structural-steel framing.
4. Division 05 Section "Metal Fabrications" for kickers and other miscellaneous steel shapes.
5. Division 07 Section "Sheet Metal Flashing and Trim" for flashing receivers and Reglets.

### 1.3 PERFORMANCE REQUIREMENTS

A. Structural Performance: Provide precast structural concrete units and connections capable of withstanding design loads within limits and under conditions indicated.

### 1.4 SUBMITTALS

A. Product Data: For each type of product indicated.

B. Design Mixes: For each concrete mix.

C. Shop Drawings: Detail fabrication and installation of precast structural concrete units. Indicate member locations, plans, elevations, dimensions, shapes, cross sections, openings, and types of reinforcement, including special reinforcement.

1. Indicate welded connections by AWS standard symbols. Detail loose and cast-in hardware, inserts, connections, and joints, including accessories.
2. Indicate locations and details of anchorage devices to be embedded in other construction.

3. Comprehensive engineering analysis signed and sealed certified by the qualified professional engineer responsible for its preparation.

    a. Include calculated fire-resistance analysis.

D. Samples of bearing pads.

E. Welding Certificates: Copies of certificates for welding procedures and personnel.

F. Qualification Data: For firms and persons specified in "Quality Assurance" Article to demonstrate their capabilities and experience. Include lists of completed projects with project names and addresses, names and addresses of architects and owners, and other information specified.

G. Material Test Reports: From a qualified testing agency indicating and interpreting test results of the following for compliance with requirements indicated:

H. Material Certificates: Signed by manufacturers certifying that each of the following items complies with requirements:

1. Concrete materials.
2. Reinforcing materials and prestressing tendons.
3. Admixtures.
4. Bearing pads.

## 1.5 QUALITY ASSURANCE

A. Installer Qualifications: An experienced installer who has completed precast structural concrete work similar in material, design, and extent to that indicated for this Project and whose work has resulted in construction with a record of successful in-service performance.

B. Fabricator Qualifications: A firm that complies with the following requirements and is experienced in manufacturing precast structural concrete units similar to those indicated for this Project and with a record of successful in-service performance.

1. Assumes responsibility for engineering precast structural concrete units to comply with performance requirements. This responsibility includes preparation of Shop Drawings and comprehensive engineering analysis by a qualified professional engineer.
2. Professional Engineer Qualifications: A professional engineer who is legally qualified to practice in jurisdiction where Project is located and who is experienced in providing engineering services of the kind indicated. Engineering services are defined as those performed for installations of precast structural concrete that are similar to those indicated for this Project in material, design, and extent.
3. Has sufficient production capacity to produce required units without delaying the Work.

C. Testing Agency Qualifications: An independent testing agency, acceptable to authorities having jurisdiction, qualified according to ASTM C 1077 and ASTM E 329 to conduct the testing indicated, as documented according to ASTM E 548.

D. Design Standards: Comply with ACI 318 and the design recommendations of PCI MNL 120, "PCI Design Handbook--Precast and Prestressed Concrete."

E. Quality-Control Standard: For manufacturing procedures and testing requirements, quality-control recommendations, and camber and dimensional tolerances for types of units required, comply with PCI MNL 116, "Manual for Quality Control for Plants and Production of Precast and Prestressed Concrete Products."

F. Product Options: Drawings indicate size, profiles, and dimensional requirements of precast concrete units and are based on the specific types of units indicated. Other fabricators' precast concrete units complying with requirements may be considered. Refer to Division 01 Section "Substitutions."

G. Welding: Qualify procedures and personnel according to AWS D1.1, "Structural Welding Code--Steel"; and AWS D1.4, "Structural Welding Code--Reinforcing Steel."

## 1.6 DELIVERY, STORAGE, AND HANDLING

A. Deliver precast structural concrete units to Project site in such quantities and at such times to ensure continuity of installation. Store units at Project site to prevent cracking, distorting, warping, staining, or other physical damage, and so markings are visible.

B. Lift and support units only at designated lifting and supporting points as shown on Shop Drawings.

## 1.7 SEQUENCING

A. Furnish anchorage items to be embedded in other construction without delaying the Work. Provide setting diagrams, templates, instructions, and directions, as required, for installation.

# PART 2 - PRODUCTS

## 2.1 MOLD MATERIALS

A. Molds: Provide molds and, where required, form-facing materials of metal, plastic, wood, or another material that is nonreactive with concrete and dimensionally stable to produce continuous and true precast concrete surfaces within fabrication tolerances and suitable for required finishes.

## 2.2 REINFORCING MATERIALS

A. Reinforcing Bars: ASTM A 615, Grade 60, deformed.

B. Plain-Steel Welded Wire Reinforcing: ASTM A 185, fabricated from as-drawn steel wire into flat sheets.

C. Supports: Manufacturer's bolsters, chairs, spacers, and other devices for spacing, supporting, and fastening reinforcing bars and welded wire fabric in place according to CRSI's "Manual of Standard Practice," PCI MNL 116. Use all-plastic or CRSI Class 1 plastic-protected bar supports

## 2.3 PRESTRESSING TENDONS

A. Prestressing Strand: ASTM A 416, Grade 250 or 270, uncoated, 7-wire, low-relaxation strand.

## 2.4 CONCRETE MATERIALS

A. Portland Cement: ASTM C 150, Type I or Type III, of same type, brand, and source.

B. Normal-Weight Aggregates: Except as modified by PCI MNL 116, ASTM C 33, with coarse aggregates complying with Class 4S.

C. Water: Potable; free from deleterious material that may affect color stability, setting, or strength of concrete and complying with chemical limits of PCI MNL 116.

D. Air-Entraining Admixture: ASTM C 260, certified by manufacturer to be compatible with other required admixtures.

E. Water-Reducing Admixture: ASTM C 494, Type A.

F. Retarding Admixture: ASTM C 494, Type B.

G. Water-Reducing and Retarding Admixture: ASTM C 494, Type D.

H. High-Range, Water-Reducing Admixture: ASTM C 494, Type F.

I. High-Range, Water-Reducing and Retarding Admixture: ASTM C 494, Type G.

J. Plasticizing Admixture: ASTM C 1017.

K. Fly Ash Admixture: ASTM C 618, Class C or F.

## 2.5 STEEL CONNECTION MATERIALS

A. Carbon-Steel Shapes and Plates: ASTM A 36.

B. Carbon-Steel Headed Studs: ASTM A 108, AISI 1018 through AISI 1020, cold finished; AWS D1.1, Type A or B, with arc shields.

C. Malleable Steel Castings: ASTM A 47.

D. Deformed-Steel Wire or Bar Anchors: ASTM A 496 or ASTM A 706.

E. Carbon-Steel Bolts and Studs: ASTM A 307, Grade A; carbon-steel, hex-head bolts and studs; carbon-steel nuts; and flat, unhardened steel washers.

F. Finish: For exterior steel items, steel in exterior walls, and items indicated for galvanizing, apply zinc coating by hot-dip process according to ASTM A 123, after fabrication, and ASTM A 153, as applicable.

1. Galvanizing Repair Paint: High-zinc-dust-content paint with dry film containing not less than 94 percent zinc dust by weight, and complying with DOD-P-21035A or SSPC-Paint 20.

G. Shop-Primed Finish: Prepare surfaces of nongalvanized steel items, except those surfaces to be embedded in concrete, according to requirements in SSPC-SP 3 and shop-apply lead and chromate-free, rust-inhibitive primer, complying with performance requirements in SSPC-Paint 25 according to SSPC-PA 1.

H. Welding Electrodes: Comply with AWS standards.

I. Accessories: Provide clips, hangers, plastic shims, and other accessories required to install precast structural concrete units.

## 2.6 BEARING PADS

A. Provide bearing pads for precast structural concrete units as follows:

1. Hardboard: AHA A135.4, Class 1, tempered hardboard strips, smooth on both sides.
2. High-Density Plastic: Multimonomer, nonleaching, plastic strip.

## 2.7 GROUT MATERIALS

A. Sand-Cement Grout: Portland cement, ASTM C 150, Type I, and clean, natural sand, ASTM C 144. Mix at ratio of 1 part cement to 2-1/2 parts sand, by volume, with minimum water required for placement and hydration.

## 2.8 CONCRETE MIXES

A. Prepare design mixes for each type of concrete required.

1. Limit use of fly ash and silica fume to not exceed, in aggregate, 25 percent of Portland cement by weight.

B. Design mixes may be prepared by a qualified independent testing agency or by qualified precast plant personnel at precast structural concrete fabricator's option.

C. Limit water-soluble chloride ions to the maximum percentage by weight of cement permitted by ACI 318.

D. Normal-Weight Concrete: Proportion mixes by either laboratory trial batch or field test data methods according to ACI 211.1, with materials to be used on Project, to provide normal-weight concrete with the following properties:

1. Compressive Strength (28 Days): 5000 psi.
2. Maximum Water-Cementitious Materials Ratio: 0.40.
3. Add air-entraining admixture at manufacturer's prescribed rate to result in normal-weight concrete at point of placement having an air content of 2.5 to 4.5 precent, with a tolerance of plus or minus 1.5 percent:

E. Other Admixtures: Use water-reducing, high-range water-reducing, water-reducing and accelerating, or water-reducing and retarding admixtures according to manufacturer's written instructions.

F. Concrete Mix Adjustments: Concrete mix design adjustments may be proposed if characteristics of materials, Project conditions, weather, test results, or other circumstances warrant.

## 2.9 FABRICATION

A. Formwork: Accurately construct forms, mortar tight, of sufficient strength to withstand pressures due to concrete-placement operations and temperature changes and for pretensioning and detensioning operations. Maintain formwork to provide completed precast concrete units of shapes, lines, and dimensions indicated, within fabrication tolerances.

1. Coat surfaces of forms with bond-breaking compound before reinforcement is placed. Provide commercial-formula, form-coating compounds that will not bond with, stain, or adversely affect concrete surfaces and that will not impair subsequent treatments of concrete surfaces requiring bond or adhesion. Apply in compliance with manufacturer's written instructions.
2. Unless forms for precast, prestressed concrete units are stripped before detensioning, design forms so stresses are not induced in precast concrete units because of deformation or movement of concrete during detensioning.

B. Built-in Anchorages: Accurately position built-in anchorage devices and secure to formwork. Locate anchorages where they do not affect position of main reinforcement or concrete placement. Do not relocate bearing plates in units unless approved by Architect.

C. Cast-in openings larger than 10 inches in diameter or 10 inches square according to Shop Drawings. Smaller holes may be field cut by trades requiring them, as approved by Architect.

D. Reinforcement: Comply with recommendations in CRSI's "Manual of Standard Practice" for fabricating, placing, and supporting reinforcement.

1. Clean reinforcement of loose rust and mill scale, earth, and other materials that reduce or destroy the bond with concrete.
2. Accurately position, support, and secure reinforcement against displacement by formwork, construction, or concrete-placement operations. Locate and support reinforcement by metal chairs, runners, bolsters, spacers, and hangers, as required.
3. Place reinforcement to obtain at least the minimum coverage for concrete protection. Arrange, space, and securely tie bars and bar supports to hold reinforcement in position while placing concrete. Set wire ties so ends are directed into concrete, not toward exposed concrete surfaces.

4. Install welded wire fabric in lengths as long as practicable. Lap adjoining pieces at least one full mesh and lace splices with wire. Offset laps of adjoining widths to prevent continuous laps in either direction.

E. Prestress tendons for precast structural concrete units by either pretensioning or posttensioning methods. Comply with PCI MNL 116.

1. Delay detensioning until concrete has reached at least 70 percent of its compressive strength as established by test cylinders cured under the same conditions as concrete.
2. If concrete has been heat cured, detension while concrete is still warm and moist to avoid dimensional changes that may cause cracking or undesirable stresses.
3. Detension pretensioned tendons either by gradually releasing tensioning jacks or by heat-cutting tendons, using a sequence and pattern to prevent shock or unbalanced loading.

F. Mix concrete according to PCI MNL 116 and requirements in this Section. After concrete batching, no additional water may be added.

G. Place concrete in a continuous operation to prevent seams or planes of weakness from forming in precast concrete units. Comply with requirements in PCI MNL 116 for measuring, mixing, transporting, and placing concrete.

H. Thoroughly consolidate placed concrete by internal and external vibration without dislocating or damaging reinforcement and built-in items. Use equipment and procedures complying with PCI MNL 116.

I. Comply with ACI 306.1 procedures for cold-weather concrete placement.

J. Comply with ACI 301 and ACI 305R recommendations for hot-weather concrete placement.

K. Identify pickup points of precast concrete units and orientation in structure with permanent markings, complying with markings indicated on Shop Drawings. Imprint casting date on each precast concrete unit on a surface that will not show in finished structure.

L. Cure concrete, according to requirements in PCI MNL 116, by moisture retention without heat or by accelerated heat curing using low-pressure live steam or radiant heat and moisture.

M. Product Tolerances: Fabricate precast structural concrete units straight and true to size and shape with exposed edges and corners precise and true so each finished unit complies with PCI MNL 116 product tolerances.

N. Finish formed surfaces of precast structural concrete as indicated for each type of unit, and as follows:

1. Standard Finish: Normal plant-run finish produced in forms that impart a smooth finish to concrete. Small surface holes caused by air bubbles, normal color variations, form joint marks, and minor chips and spalls will be tolerated. Major or unsightly imperfections, honeycombs, or structural defects are not permitted.

O. Screed finish unformed surfaces. Strike off and consolidate concrete with vibrating screeds to a uniform finish. Hand screed at projections.

1. Apply scratch finish to precast concrete units that will receive concrete topping after installation. After initial strikeoff, transversely scarify surface to provide ridges approximately 1/4 inch deep.

## 2.10 HOLLOW-CORE SLAB UNITS

A. Type: Precast, prestressed concrete units with open, hollow cores running the full length of the slab units.

B. Furnish units free of voids and honeycombs.

C. Provide standard finish to precast concrete units.

D. Reinforce units to resist transportation and erection stresses.

E. Include cast-in weld plates where required.

F. Coordinate with other trades for installation of cast-in items.

G. Provide solid, monolithic, precast concrete slab units forming an integral part of hollow-core slab unit system. Design and fabricate solid units to dimensions and details indicated for hollow-core slab units.

H. Provide headers of cast-in-place concrete or structural-steel shapes for openings larger than one slab width according to hollow-core slab unit fabricator's written recommendations.

## 2.11 SOURCE QUALITY CONTROL

A. Employ an independent testing agency to evaluate precast structural concrete fabricator's quality-control and testing methods.

1. Allow testing agency access to material storage areas, concrete production equipment, concrete placement, and curing facilities. Cooperate with Owner's testing agency and provide samples of materials and concrete mixes as may be requested for additional testing and evaluation.

B. Quality-Control Testing: Test and inspect precast concrete according to PCI MNL 116 requirements.

C. Strength of precast concrete units will be considered deficient if units fail to comply with PCI MNL 116 requirements, including the following:

1. Units fail to comply with compressive-strength test requirements.
2. Reinforcement and prestressed tendons of units do not comply with fabrication requirements.
3. Concrete curing and protection of units against extremes in temperature fail to comply with requirements.
4. Units are damaged during handling and erecting.

D. Testing: If there is evidence that the strength of precast concrete units may be deficient or may not comply with PCI MNL 116 requirements, employ an independent testing agency to obtain, prepare, and test cores drilled from hardened concrete to determine compressive strength according to ASTM C 42.

1. A minimum of three representative cores will be taken from units of suspect strength, from locations directed by Architect.
2. Cores will be tested, after immersion in water, in a wet condition per ACI 301 if units will be wet under service conditions.
3. Cores will be tested in an air-dry condition per ACI 301 if units will be dry under service conditions.
4. Strength of concrete for each series of 3 cores will be considered satisfactory if the average compressive strength is equal to at least 85 percent of the 28-day design compressive strength and no single core is less than 75 percent of the 28-day design compressive strength.
5. Test results will be made in writing on the same day that tests are performed, with copies to Architect, Contractor, and precast concrete fabricator. Test reports will include the following:

    a. Project identification name and number.
    b. Date when tests were performed.
    c. Name of precast concrete fabricator.
    d. Name of concrete testing agency.
    e. Identification letter, name, and type of precast concrete unit or units represented by core tests; design compressive strength; type of break; compressive strength at break, corrected for length-diameter ratio; and direction of applied load to core in relation to horizontal plane of concrete as placed.

E. Patching: If core test results are satisfactory and precast concrete units comply with requirements, clean and dampen core holes and solidly fill with precast concrete mix that has no coarse aggregate, and finish to match adjacent precast concrete surfaces.

F. Dimensional Tolerances: Units with dimensions smaller or larger than required and not complying with tolerance limits may be subject to additional testing.

1. Precast concrete units with dimensions larger than required will be rejected if the appearance or function of the structure is adversely affected or if larger dimensions interfere with other construction. Repair or remove and replace rejected units, as required, to comply with construction conditions.

G. Defective Work: Precast concrete units that do not comply with requirements, including strength, manufacturing tolerances, and finishes, are unacceptable. Replace with precast concrete units that comply with requirements.

## PART 3 - EXECUTION

### 3.1 EXAMINATION

A. Examine substrates and conditions for compliance with requirements for installation tolerances, true and level bearing surfaces, and other conditions affecting performance. Proceed with installation only after unsatisfactory conditions have been corrected.

### 3.2 INSTALLATION

A. Bearing Pads: Install bearing pads as precast concrete units are being erected. Set pads on true, level, and uniform bearing surfaces and maintain in correct position until precast concrete units are placed.

B. Install precast structural concrete. Shore and brace precast concrete units to maintain location, stability, and alignment until permanent connections are installed.

C. Welding: Perform welding in compliance with AWS D1.1 and AWS D1.4, with qualified welders.

1. Protect precast concrete units and bearing pads from damage by field welding or cutting operations and provide noncombustible shields as required.
2. Repair damaged metal surfaces by cleaning and applying a coat of galvanized repair paint to galvanized surfaces.
3. Repair damaged metal surfaces by cleaning and repriming damaged painted surfaces.

D. Fasteners: Do not use drilled or powder-actuated fasteners for attaching accessory items to precast, prestressed concrete units unless approved by Architect.

E. Erection Tolerances: Install precast concrete units level, plumb, square, and true, without exceeding the recommended erection tolerances in PCI MNL 127, "Recommended Practice for Erection of Precast Concrete."

F. Grouting Connections and Joints: After precast concrete units have been placed and secured, grout open spaces at keyways, connections, and joints as follows:

1. Provide forms or other approved method to retain grout in place until hard enough to support itself. Pack spaces with stiff grout material, tamping until voids are completely filled. Place grout to finish smooth, level, and plumb with adjacent concrete surfaces. Keep grouted joints damp for not less than 24 hours after initial set. Promptly remove grout material from exposed surfaces before it hardens.

### 3.3 FIELD QUALITY CONTROL

A. Testing: Owner shall engage a qualified independent testing and inspecting agency to perform field tests and inspections.

B. Testing agency will report test results promptly and in writing to Contractor and Architect.

C. Remove and replace work that does not comply with specified requirements.

D. Additional testing and inspecting, at Contractor's expense, will be performed to determine compliance of corrected work with specified requirements.

## 3.4 CLEANING

A. Clean exposed surfaces of precast concrete units after erection to remove weld marks, other markings, dirt, and stains.

1. Wash and rinse according to precast concrete fabricator's written recommendations. Protect other work from staining or damage due to cleaning operations.
2. Do not use cleaning materials or processes that could change the appearance of exposed concrete finishes.

END OF SECTION 034100

# SECTION 042000 - UNIT MASONRY

## PART 1 - GENERAL

### 1.1 RELATED DOCUMENTS

A. Drawings and general provisions of the Contract, including General and Supplementary Conditions and Division 01 Specification Sections, apply to this Section.

### 1.2 SUMMARY

A. Section Includes:

1. Concrete masonry units.
2. Face brick.
3. Mortar and grout.
4. Ties and anchors.
5. Embedded flashing.
6. Miscellaneous masonry accessories.

B. Related Sections:

1. Section 051200 "Structural Steel Framing" for installing anchor sections of adjustable masonry anchors for connecting to structural steel frame.
2. Section 076200 "Sheet Metal Flashing and Trim" for exposed sheet metal flashing and for furnishing manufactured reglets installed in masonry joints.

### 1.3 DEFINITIONS

A. CMU(s): Concrete masonry unit(s).

### 1.4 ACTION SUBMITTALS

A. Product Data: For each type of product indicated.

B. Shop Drawings: For the following:

1. Masonry Units: Show sizes, profiles, coursing, and locations of special shapes.
2. Reinforcing Steel: Detail bending and placement of unit masonry reinforcing bars. Comply with ACI 315, “Details and Detailing of Concrete Reinforcement.”
3. Fabricated Flashing: Detail corner units, end-dam units, and other special applications.

C. Samples for Initial Selection:

1. Face brick, in the form of straps of five or more bricks.
2. Colored mortar.

3. Weep holes/vents.

## 1.5 INFORMATIONAL SUBMITTALS

A. Qualification Data: For testing agency.

B. Material Certificates: For each type and size of the following:

1. Masonry units.

   a. Include material test reports substantiating compliance with requirements.
   b. For brick, include size-variation data verifying that actual range of sizes falls within specified tolerances.
   c. For exposed brick, include test report for efflorescence according to ASTM C 67.

2. Cementitious materials. Include brand, type, and name of manufacturer.
3. Preblended, dry mortar mixes. Include description of type and proportions of ingredients.
4. Grout mixes. Include description of type and proportions of ingredients.
5. Anchors, ties, and metal accessories.

C. Mix Designs: For each type of mortar and grout. Include description of type and proportions of ingredients.

1. Include test reports for mortar mixes required to comply with property specification. Test according to ASTM C 109/C 109M for compressive strength, ASTM C 1506 for water retention, and ASTM C 91 for air content.
2. Include test reports, according to ASTM C 1019, for grout mixes required to comply with compressive strength requirement.

## 1.6 QUALITY ASSURANCE

A. Testing Agency Qualifications: Qualified according to ASTM C 1093 for testing indicated.

B. Source Limitations for Masonry Units: Obtain exposed masonry units of a uniform texture and color, or a uniform blend within the ranges accepted for these characteristics, from single source from single manufacturer for each product required.

C. Source Limitations for Mortar Materials: Obtain mortar ingredients of a uniform quality, including color for exposed masonry, from single manufacturer for each cementitious component and from single source or producer for each aggregate.

D. Masonry Standard: Comply with ACI 530.1/ASCE 6/TMS 602 unless modified by requirements in the Contract Documents.

E. Mockups: Build mockups to verify selections made under sample submittals and to demonstrate aesthetic effects and set quality standards for materials and execution.

1. Build mockup of typical wall area as shown on Drawings.

2. Build mockups for typical exterior and interior walls in sizes approximately 48 inches long by 48 inches high by full thickness, including face and backup wythes and accessories.

    a. Include a sealant-filled joint at least 16 inches long in exterior wall mockup.
    b. Include lower corner of window opening at upper corner of exterior wall mockup. Make opening approximately 12 inches wide by 16 inches high.
    c. Include through-wall flashing installed for a 24-inch length in corner of exterior wall mockup approximately 16 inches down from top of mockup, with a 12-inch length of flashing left exposed to view (omit masonry above half of flashing).

3. Where masonry is to match existing, erect mockups adjacent and parallel to existing surface.
4. Clean one-half of exposed faces of mockups with masonry cleaner as indicated.
5. Protect accepted mockups from the elements with weather-resistant membrane.
6. Approval of mockups is for color, texture, and blending of masonry units; relationship of mortar and sealant colors to masonry unit colors; tooling of joints; and aesthetic qualities of workmanship.

    a. Approval of mockups is also for other material and construction qualities specifically approved by Architect in writing.
    b. Approval of mockups does not constitute approval of deviations from the Contract Documents contained in mockups unless such deviations are specifically approved by Architect in writing.

7. Approved mockups may become part of the completed Work if undisturbed at time of Substantial Completion.

F. Preinstallation Conference: Conduct conference at Project site to comply with requirements in Section 013100 "Project Management and Coordination."

## 1.7 DELIVERY, STORAGE, AND HANDLING

A. Store masonry units on elevated platforms in a dry location. If units are not stored in an enclosed location, cover tops and sides of stacks with waterproof sheeting, securely tied. If units become wet, do not install until they are dry.

B. Store cementitious materials on elevated platforms, under cover, and in a dry location. Do not use cementitious materials that have become damp.

C. Store aggregates where grading and other required characteristics can be maintained and contamination avoided.

D. Deliver preblended, dry mortar mix in moisture-resistant containers designed for use with dispensing silos. Store preblended, dry mortar mix in delivery containers on elevated platforms, under cover, and in a dry location or in covered weatherproof dispensing silos.

E. Store masonry accessories, including metal items, to prevent corrosion and accumulation of dirt and oil.

## 1.8 PROJECT CONDITIONS

A. Protection of Masonry: During construction, cover tops of walls, projections, and sills with waterproof sheeting at end of each day's work. Cover partially completed masonry when construction is not in progress.

1. Extend cover a minimum of 24 inches down both sides of walls and hold cover securely in place.
2. Where one wythe of multiwythe masonry walls is completed in advance of other wythes, secure cover a minimum of 24 inches down face next to unconstructed wythe and hold cover in place.

B. Do not apply uniform floor or roof loads for at least 12 hours and concentrated loads for at least three days after building masonry walls or columns.

C. Stain Prevention: Prevent grout, mortar, and soil from staining the face of masonry to be left exposed or painted. Immediately remove grout, mortar, and soil that come in contact with such masonry.

1. Protect base of walls from rain-splashed mud and from mortar splatter by spreading coverings on ground and over wall surface.
2. Protect sills, ledges, and projections from mortar droppings.
3. Protect surfaces of window and door frames, as well as similar products with painted and integral finishes, from mortar droppings.
4. Turn scaffold boards near the wall on edge at the end of each day to prevent rain from splashing mortar and dirt onto completed masonry.

D. Cold-Weather Requirements: Do not use frozen materials or materials mixed or coated with ice or frost. Do not build on frozen substrates. Remove and replace unit masonry damaged by frost or by freezing conditions. Comply with cold-weather construction requirements contained in ACI 530.1/ASCE 6/TMS 602.

1. Cold-Weather Cleaning: Use liquid cleaning methods only when air temperature is 40 deg F and higher and will remain so until masonry has dried, but not less than seven days after completing cleaning.

E. Hot-Weather Requirements: Comply with hot-weather construction requirements contained in ACI 530.1/ASCE 6/TMS 602.

# PART 2 - PRODUCTS

## 2.1 MASONRY UNITS, GENERAL

A. Defective Units: Referenced masonry unit standards may allow a certain percentage of units to contain chips, cracks, or other defects exceeding limits stated in the standard. Do not use units where such defects will be exposed in the completed Work.

B. Fire-Resistance Ratings: Where indicated, provide units that comply with requirements for fire-resistance ratings indicated as determined by testing according to ASTM E 119, by equivalent masonry thickness, or by other means, as acceptable to authorities having jurisdiction.

2.2 CONCRETE MASONRY UNITS

A. Shapes: Provide shapes indicated and as follows, with exposed surfaces matching exposed faces of adjacent units unless otherwise indicated.

1. Provide special shapes for lintels, corners, jambs, sashes, movement joints, headers, bonding, and other special conditions.
2. Provide bullnose units for outside corners unless otherwise indicated.

B. CMUs: ASTM C 90.

1. Density Classification: Normal weight.
2. Unit Compressive Strength; Provide units with minimum average net-area compressive strength of 2150 psi.
3. Size (Width): Manufactured to dimensions 3/8 inch less than nominal dimensions.
4. Exposed Faces: Provide color and texture matching the range represented by Architect's sample.

a. Products: Subject to compliance with requirements, available products that may be incorporated into the Work include the following:

1) American Brick and Block, Inc., Dayton, OH 45408
2) Marble Cliff Block & Builder’s Supply, Columbus, OH 43207
3) Oberfield’s Concrete Products, Delaware, OH 43015
4) Snyder Brick & Block, Dayton, OH 45439
5) Wellnitz Company, Columbus, OH 43222

2.3 BRICK

A. General: Provide shapes indicated and as follows, with exposed surfaces matching finish and color of exposed faces of adjacent units:

1. For ends of sills and caps and for similar applications that would otherwise expose unfinished brick surfaces, provide units without cores or frogs and with exposed surfaces finished.
2. Provide special shapes for applications where stretcher units cannot accommodate special conditions, including those at corners, movement joints, bond beams, sashes, and lintels.
3. Provide special shapes for applications requiring brick of size, form, color, and texture on exposed surfaces that cannot be produced by sawing.
4. Provide special shapes for applications where shapes produced by sawing would result in sawed surfaces being exposed to view.

B. Face Brick: Facing brick complying with ASTM C 216.

1. Grade: SW.
2. Products:

a. Beechwood E.S. – Belden Brick.

1) BR-1: Double Monarch & Quad, Timberweed Velour.
2) BR-2: Double Monarch & Quad, Admiral Full Range.

b. Etna E.S. – Glen Gery

1) BR-1: Sunset Flushed Velour
2) BR-2: Smokey Quartz Velour
3) BR-3: Rome Grey Velour

c. Kae Avenue E.S. – Glen Gery

1) BR-1: Sunset Flashed Velour
2) BR-2: Smokey Quartz Velour

3. Initial Rate of Absorption: Less than 30 g/30 sq. in. per minute when tested per ASTM C 67.
4. Efflorescence: Provide brick that has been tested according to ASTM C 67 and is rated "not effloresced."
5. Surface Coating: Brick with colors or textures produced by application of coatings shall withstand 50 cycles of freezing and thawing per ASTM C 67 with no observable difference in the applied finish when viewed from 10 feet.

## 2.4 MORTAR AND GROUT MATERIALS

A. Masonry Cement: ASTM C 91.

1. Products: Subject to compliance with requirements, provide one of the following:

a. Cemex S.A.B. de C.V.; Richmortar.
b. Essroc, Italcementi Group; Brixment.
c. Lafarge North America Inc.; Lafarge Masonry Cement.
d. Lehigh Cement Company; Lehigh Masonry Cement.

B. Color Cement Product: Pre-blended mortar made from masonry cement and mortar pigments, all complying with specified requirements, and containing no other ingredients.

1. Provide pre-blended colored masonry cement mortar for all brick work.
2. Provide natural color (non-colored) pre-blended masonry cement mortar for all CMU work.
3. Colored Masonry Cement:

a. Cemex S.A.B. de C.V.; Richcolor Masonry Cement.
b. Essroc, Italcementi Group; Brixment-in-Color.
c. Lafarge North America Inc.; U.S. Cement Custom Color Masonry Cement.
d. Lehigh Cement Company; Lehigh Custom Color Masonry Cement.

4. Formulate blend as required to produce color selected by Architect under ‘submittals’.
5. Pigments shall not exceed 5 percent of masonry cement by weight.

C. Aggregate for Mortar: ASTM C 144.

1. For mortar that is exposed to view, use washed aggregate consisting of natural sand or crushed stone.
2. Colored-Mortar Aggregates: Natural sand or crushed stone of color necessary to produce required mortar color.

D. Grout:

1. Aggregate for Grout: ASTM C 404.
2. Slump: 8- to 11-inches.
3. Minimum compressive strength: 3,000 psi at 28 days.
4. Maximum compressive strength: 5,000 psi at 28 days.

E. Cold-Weather Admixture: Nonchloride, noncorrosive, accelerating admixture complying with ASTM C 494, Type C, and recommended by manufacturer for use in masonry mortar of composition indicted.

1. Use of cold-weather admixtures in mortar is not a substitution for compliance with ACI 530.1/ASCE 6/TMS 602 cold weather construction requirements.
2. Products: Subject to compliance with requirements, provide one of the following:

a. Addiment Incorporated; Mortar Kick.
b. Euclid Chemical Company (The); Accelguard 80.
c. Grace Construction Products, W.R. Grace & Co. – Conn.; Morset.
d. Sonneborn Products, BASF Aktiengesellschaft; Trimix-NCA.
e. Spec Mix Inc.; Spec Mix Non-Chloride Accelerator.

F. Water: Potable.

## 2.5 REINFORCEMENT

A. Uncoated Steel Reinforcing Bars: ASTM A 615 or ASTM A 996, Grade 60.

B. Masonry Joint Reinforcement, General: ASTM A 951.

1. Hot-dip galvanized, carbon steel.
2. Wire Size for Cross Rods and Side Rods: W1.7 or 0.148-inch diameter.
3. Wire Size for Cavity Adjustable Tie and Cross Tabs: Minimum W2.8 or 0.188-inch diameter. Actual size as determined by the delegated design engineer as required in Part 1 “Performance Requirements” of this section and in accordance with reviewed submittals including structural calculations for adjustable ties and cross tabs and similar veneer anchors.
4. Spacing of Cross Rods, Tabs, and Cross Ties: Not more than 16 inches o.c. each way and closer on center surrounding all openings; and as determined by the delegated Design Engineer as required in Part 1 “Performance Requirements” of this Section.
5. Provide in lengths of not less than 10 feet, with refabricated corner and tee units.

C. Masonry Joint Reinforcement for Multiwythe Masonry:

1. For Masonry Veneer / CMU cavity walls: Adjustable (2-piece) type with single pair of side rods, and cross tabs spaced not more than 16 inches o.c. and with separate adjustable ties engaging the cross tabs.

   a. Subject to delegated design engineer's calculations and documentation, adjustable ties and cross tabs shall be rectangular and 0.188-inch diameter minimum. Space side rods for embedment within each face shell of CMU wythe and size adjustable ties to extend at least halfway through masonry veneer wythe but with at least 5/8-inch vover on outside face. Assembly shall provide 100% protection against separation of adjustable ties from cross tabs and shall not allow the adjustable ties to be installed beyond allowable eccentricity.

   b. Products: Subject to compliance with requirements including size and spacing strength design of the delegated design engineer, provide one of the following:

      1) Dur-O-Wal, Inc.; Adjustable Dur-O-Tab.
      2) Hohmann and Barnard, Inc.; Catalog No. 265 Ladder Style.
      3) Wire-Bond; Series 600 Ladder Type with Adjustable Tab

## 2.6 TIES AND ANCHORS

A. Materials: Provide ties and anchors specified in this article that are made from materials that comply with the following unless otherwise indicated.

   1. Hot-Dip Galvanized, Carbon-Steel Wire: ASTM A 82; with ASTM A 153, Class B-2 coating.
   2. Steel Sheet, Galvanized after Fabrication: ASTM A 1008/A 1008M, Commercial Steel, with ASTM A 153/A 153M, Class B coating.

B. Adjustable Anchors for Connecting to Structure: Provide anchors that allow vertical or horizontal adjustment but resist tension and compression forces perpendicular to plane of wall.

   1. Anchor Section for Welding to Steel Frame: Crimped 1/4-inch-diameter, hot-dip galvanized steel wire.
   2. Tie Section for Steel Frame: Triangular-shaped wire tie, sized to extend within 1 inch of masonry face, made from minimum 0.188-inch-diameter, hot-dip galvanized steel wire. Where column web ties are indicated, provide 1/4-inch diameter x 12-inches long ties made from hot-dip galvanized steel.

C. Adjustable Masonry-Veneer Anchors for connecting to CMU where horizontal joints of veneer do not align with horizontal joints of backup CMU to allow proper engagement of cross tabs.

   1. General: Provide anchors that allow vertical adjustment but resist tension and compression forces perpendicular to plane of wall, for attachment over concrete masonry units at cavity walls where indicated on Drawings, and as follows:

      a. Structural Performance Characteristics: Capable of withstanding a 100-lbf load in both tension and compression without deforming or developing play in excess of 0.05 inch.

2. Screw-Attached, Masonry-Veneer Anchors: Units consisting of a wire tie and a metal anchor section.

    a. Anchor Section: Sheet metal plate, 1-1/4 inches wide by 6 inches long, with screw holes top and bottom, top and bottom ends bent to form pronged legs of length to match thickness of insulation; and raised rib-stiffened strap, 5/8 inch wide by 3-5/8 inches long, stamped into center to provide a slot between strap and plate for inserting wire tie, hot-dip galvanized after fabrication. Attach through insulation to concrete masonry units.
    b. Fabricate sheet metal anchor sections and other sheet metal parts form 0.097-inch-thick, steel sheet, galvanized after fabrication.
    c. Wire Ties: Rectangular-wire ties fabricated from minimum 0.188-inch-diameter, hot-dip galvanized steel wire.
    d. Products: provide one of the following:

        1) Hohmann & Barnard, Inc; X-Seal Anchor, Byna-Lok Wire Tie.
        2) Sandell Manufacturing Co., Inc.; VAX Anchor with VA Dovetail Tie.
        3) Wire-Bond; Type III-x Anchor, 1501 rectangular anchor.

3. Stainless steel screws for anchorage to CMU: Provide 3/16- or 1/4-inch diameter TapCon or equivalent hex-washer-head screws of length required for materials fastened and 1-1/2-inch embedment into CMU.

D. Partition Top Anchors: As detailed on the drawings.

## 2.7 MISCELLANEOUS ANCHORS

A. Anchor Bolts: Headed or L-shaped steel bolts complying with ASTM A 307, Grade A; with ASTM A 563 hex nuts and, where indicated, flat washers; hot-dip galvanized to comply with ASTM A 153, Class C; of dimensions indicted.

B. Postinstalled Anchors: Provide chemical anchors, with capability to sustain, without failure, a load equal to six times the load imposed when installed in solid or grouted unit masonry and equal to four times the load imposed when installed in concrete, as determined by testing per ASTM E 488 conducted by a qualified independent testing agency.

1. Corrosion Protection: Carbon-steel components zinc plated to comply with ASTM B 633, Class Fe/Zn 5 (5 microns) for Class SC 1 service condition (mild).
2. Adhesive: Two-component, formulated to include resin, hardener, cement and water to provide optimal curing speed as well as high strength and stiffness.
3. Products: Length as indicated or required; 3/8-inch minimum diameter.

    a. Hilti, Inc. “HIT HY 70”.
    b. Red Head “Epcon A7 Acrylic Adhesive”.
    c. Powers Fasteners “AC100+ Gold Acrylic Adhesive”.

4. Provide umbrella inserts where recommended by the manufacturer for use in hollow-core CMU.

## 2.8 EMBEDDED FLASHING MATERIALS

A. Metal Flashing: Provide metal flashing, where flashing is exposed, for exposed drip-edge leading-edge of membrane flashing, and where otherwise indicated, complying with SMACNA's "Architectural Sheet Metal Manual" and as follows:

1. Stainless Steel: ASTM A 240, Type 304, 0.016 inch thick.
2. Metal Drip Edges: Fabricate from stainless steel. Extend at least 3 inches into wall and 1/4-inch out from wall, with outer edge bent down 30 degrees and hemmed.
3. Fabricated Metal Flashing Tray with Integral End Dams: Fabricate from stainless steel in configuration shown in the drawings with welded corners. Extend 1/4" beyond outside face of wall, with outer edge bent down 30 degrees and hemmed.

B. Flexible Membrane Flashing: For flashing not exposed to the exterior, use the following:

1. Rubberized-Asphalt Membrane Flashing: Composite flashing product consisting of a pliable, adhesive rubberized-asphalt compound, bonded to a high-density, cross laminated polyethylene film to produce an overall thickness of not less than 0.040 inch.

a. Products:

1) Advanced Building Products Inc.; Peel-N-Seal.
2) Carlisle Coatings & Waterproofing; CCW-705-TWF Thru-Wall Flashing.
3) Heckmann Building Products Inc.; No. 82 Rubberized-Asphalt Thru-Wall Flashing.
4) Hohmann & Barnard, Inc.; Textroflash.
5) Sandell Manufacturing Co., Inc.; Sando-Seal.
6) Contractor Option for use at lintels only: "Total Flash cavity wall drainage system" by Mortar Net USA Ltd. in lieu of other membrane, cavity drainage material and weeps listed.

C. Sealants for Sheet Metal Flashings.

1. Elastomeric Sealants:

a. Exposed trims: ASTM C 920, chemically curing silicone sealant of type, grade, class, and use classifications required to seal joints in sheet metal flashing and trim and remain watertight.
b. Concealed flashings: Non-skinning, non-curing permanently flexible butyl sealant of type, grade, class, and use classifications required to seal overlap joints in metal flashings and remain watertight.

D. Adhesives Primers, and Seam Tapes for Flashings: Flashing manufacturer's standard products or products recommended by flashing manufacturer for bonding flashing sheets to each other and to substrates.

E. Metal Termination Bars: Predrilled stainless-steel or aluminum bars, approximately 1 by 1/8-inch thick; with anchors.

## 2.9 MISCELLANEOUS MASONRY ACCESSORIES

A. Wire Mesh Ties: 1/2-inch mesh, 16-gage steel wire, hot dip galvanized.

B. Compressible Filler: Premolded filler strips complying with ASTM D 1056, Grade 2A1; compressible up to 35 percent; of width and thicknesses indicated; formulated from neoprene.

C. Preformed Control-Joint Gaskets: Made from styrene-butadiene-rubber compound, complying with ASTM D 2000, designation M2AA-805 and designed to fit standard sash block and to maintain lateral stability in masonry wall; size and configuration as indicated.

D. Bond-Breaker Strips: Dense neoprene rubber (ASTM D-2000, Grade BC610) bearing pad; 1/8-inch thick. Use at steel wide flange beam and precast masonry lintel bearing end coinciding with control joint location.

E. Weep/Vent Products: Use the following unless otherwise indicated:

1. Wicking Material: Absorbent rope, ¼ to 3/8 inch in diameter, in length required to produce 2-inch exposure on exterior and 18 inches in cavity. Use only for weeps.

F. Cavity Drainage Material: Free-draining mesh, made from polymer strands that will not degrade within the wall cavity.

1. Products: Subject to compliance with requirements, provide one of the following:

a. Advanced Building Products Inc.; Mortar Break.
b. Hohmann & Barnard, Inc.; Mortar Trap.
c. Mortar Net USA, Ltd.; Mortar Net.
d. Sandell Manufacturing Co., Inc.; Mortar Web.

2. Provide one of the following configurations:

a. Strips, full-depth of cavity and 10 inches high, with dovetail shaped notches 7 inches deep that prevent clogging with mortar droppings.
b. Strips, not less than 3/4 inch thick and 10 inches high, with dimpled surface designed to catch mortar droppings and prevent weep holes from clogging with mortar.
c. Provide thinner strips where required at reduced cavity widths and no thicker than cavity width less 1/4 inch.

G. Reinforcing Bar Positioners: Wire units designed to fit into mortar bed joints spanning masonry unit cells and hold reinforcing bars in center of cells. Units are formed from 0.148-inch steel wire, hot-dip galvanized after fabrication. Provide units designed for number of bars indicated.

1. Products: Subject to compliance with requirements, provide one of the following:

a. Heckmann Building Products Inc.; No. 376 Rebar Positioner.
b. Hohmann & Barnard, Inc.; #RB or #RB-Twin Rebar Positioner.
c. Sandell Manufacturing Co., Inc.; Single and Double Rebar Positioners.
d. Wire-Bond; #3401 Figure 8 or #3402 Double Figure 8.

H. Injection Adhesive Anchor: Injectable adhesive shall be used for installation of reinforcing steel dowels into concrete, ONLY when dowling into footing was not completed per plan or misaligned.

1. Adhesive: two-component, formulated to include resin, hardener, cement and water to provide optimal curing speed as well as high strength and stiffness.
2. Products:

a. Hilti, Inc. “HIT HY 150 MAX”.
b. Red Head “Epcon A7 Acrylic Adhesive”.
c. Powers Fasteners “AC100+ Gold Acrylic Adhesive”.

## 2.10 MASONRY CLEANERS

A. Proprietary Acidic Cleaner: Manufacturer's standard-strength cleaner designed for removing mortar/grout stains, efflorescence, and other new construction stains from new masonry without discoloring or damaging masonry surfaces. Use product expressly approved for intended use by cleaner manufacturer and manufacturer of masonry units being cleaned.

1. Manufacturers: Subject to compliance with requirements, available manufacturers offering products that may be incorporated into the Work include the following:

a. Diedrich Technologies, Inc.
b. EaCo Chem, Inc.
c. ProSoCo, Inc.

## 2.11 MORTAR AND GROUT MIXES

A. General: Do not use admixtures, including pigments, air-entraining agents, accelerators, retarders, water-repellent agents, antifreeze compounds, or other admixtures, unless otherwise indicated.

1. Do not use calcium chloride in mortar or grout.
2. Add cold-weather admixture (if used) at same rate for all mortar that will be exposed to view, regardless of weather conditions, to ensure that mortar color is consistent.

B. Preblended, Dry Mortar Mix: Comply with ASTM C1714/C1714M. Furnish dry mortar ingredients in form of a preblended mix. Measure quantities by weight to ensure accurate proportions, and thoroughly blend ingredients before delivering to Project site.

C. Pre-blended mortar for Unit Masonry: Comply with ASTM C 270, Property Specification. Provide the following types of mortar for applications stated:

D.

| LOCATION | BUILDING SEGMENT | MORTAR TYPE |
|---|---|---|
| Exterior, above grade | Load-bearing wall<br>Non load-bearing wall<br>Parapet wall and veneer wall | S<br>N<br>N |
| Exterior, at or below grade | Foundation wall, walks and patios | S |
| Interior, above grade | Load-bearing wall<br>Non load-bearing partitions | N<br>N |
| Interior, at or below grade | Foundation wall | S |

E. Colored-Aggregate Mortar: Produce required mortar color by using colored aggregates and natural color or white cement as necessary to produce required mortar color.

1. Mix to match Architect's sample. Provide factory pre-mixed mortar for brickwork.

F. Grout for Unit Masonry: Comply with ASTM C 476.

1. Use grout of type indicated or, if not otherwise indicated, of type (fine or coarse) that will comply with Table 1.15.1 in ACI 530.1/ASCE 6/TMS 602 for dimensions of grout spaces and pour height.
2. Proportion grout in accordance with ASTM C 476, or paragraph 4.2.2 for specified 28-day compressive strength indicated, but not less than 3000 psi.
3. Provide grout with a slump of 8 to 11 inches as measured according to ASTM C 143/C 143M.

## PART 3 - EXECUTION

### 3.1 EXAMINATION

A. Examine conditions, with Installer present, for compliance with requirements for installation tolerances and other conditions affecting performance of the Work.

1. For the record, prepare written report, endorsed by Installer, listing conditions detrimental to performance of work.
2. Verify that foundations are within tolerances specified.

B. Before installation, examine rough-in and built-in construction for piping systems to verify actual locations of piping connections.

C. Proceed with installation only after unsatisfactory conditions have been corrected.

### 3.2 INSTALLATION, GENERAL

A. Thickness: Build cavity and composite walls and other masonry construction to full thickness shown. Build single-wythe walls to actual widths of masonry units, using units of widths indicated.

B. Leave openings for equipment to be installed before completing masonry. After installing equipment, complete masonry to match the construction immediately adjacent to opening.

C. Use full-size units without cutting if possible. If cutting is required to provide a continuous pattern or to fit adjoining construction, cut units with motor-driven saws; provide clean, sharp, unchipped edges. Allow units to dry before laying unless wetting of units is specified. Install cut units with cut surfaces and, where possible, cut edges concealed.

D. Select and arrange units for exposed unit masonry to produce a uniform blend of colors and textures.

1. Mix units from several pallets or cubes as they are placed.

E. Matching Existing Masonry: Match coursing, bonding, color, and texture of existing masonry.

F. Wetting of Brick: Wet brick before laying if initial rate of absorption exceeds 30 g/30 sq. in. per minute when tested per ASTM C 67. Allow units to absorb water so they are damp but not wet at time of laying.

## 3.3 TOLERANCES

A. Dimensions and Locations of Elements:

1. For dimensions in cross section or elevation do not vary by more than plus 1/2 inch or minus 1/4 inch.
2. For location of elements in plan do not vary from that indicated by more than plus or minus 1/2 inch.
3. For location of elements in elevation do not vary from that indicated by more than plus or minus 1/4 inch in a story height or 1/2 inch total.

B. Lines and Levels:

1. For bed joints and top surfaces of bearing walls do not vary from level by more than 1/4 inch in 10 feet, or 1/2 inch maximum.
2. For conspicuous horizontal lines, such as lintels, sills, parapets, and reveals, do not vary from level by more than 1/8 inch in 10 feet, 1/4 inch in 20 feet, or 1/2 inch maximum.
3. For vertical lines and surfaces do not vary from plumb by more than 1/4 inch in 10 feet, 3/8 inch in 20 feet, or 1/2 inch maximum.
4. For conspicuous vertical lines, such as external corners, door jambs, reveals, and expansion and control joints, do not vary from plumb by more than 1/8 inch in 10 feet, 1/4 inch in 20 feet, or 1/2 inch maximum.
5. For lines and surfaces do not vary from straight by more than 1/4 inch in 10 feet, 3/8 inch in 20 feet, or 1/2 inch maximum.
6. For vertical alignment of exposed head joints, do not vary from plumb by more than 1/4 inch in 10 feet, or 1/2 inch maximum.
7. For faces of adjacent exposed masonry units, do not vary from flush alignment by more than 1/16 inch except due to warpage of masonry units within tolerances specified for warpage of units.

C. Joints:

1. For bed joints, do not vary from thickness indicated by more than plus or minus 1/8 inch, with a maximum thickness limited to 1/2 inch.
2. For exposed bed joints, do not vary from bed-joint thickness of adjacent courses by more than 1/8 inch.
3. For head and collar joints, do not vary from thickness indicated by more than plus 3/8 inch or minus 1/4 inch.
4. For exposed head joints, do not vary from thickness indicated by more than plus or minus 1/8 inch. Do not vary from adjacent bed-joint and head-joint thicknesses by more than 1/8 inch.

## 3.4 LAYING MASONRY WALLS

A. Lay out walls in advance for accurate spacing of surface bond patterns with uniform joint thicknesses and for accurate location of openings, movement-type joints, returns, and offsets. Avoid using less-than-half-size units, particularly at corners, jambs, and, where possible, at other locations.

B. Bond Pattern for Exposed Masonry: Match existing.

C. Lay concealed masonry with all units in a wythe in running bond or bonded by lapping not less than 4-inches. Bond and interlock each course of each wythe at corners. Do not use units with less than nominal 4-inch horizontal face dimensions at corners or jambs.

D. Stopping and Resuming Work: Stop work by racking back units in each course from those in course below; do not tooth. When resuming work, clean masonry surfaces that are to receive mortar, remove loose masonry units and mortar, and wet brick if required before laying fresh masonry.

E. Built-in Work: As construction progresses, build in items specified in this and other Sections. Fill in solidly with masonry around built-in items.

F. Fill space between steel frames and masonry solidly with mortar unless otherwise indicated.

G. Where built-in items are to be embedded in cores of hollow masonry units, place a layer of metal lath, wire mesh, or plastic mesh in the joint below and rod mortar or grout into core.

H. Fill cores in hollow CMUs with grout 24 inches under bearing plates, beams, lintels, posts, and similar items unless otherwise indicated.

I. Build non-load-bearing interior partitions full height of story to underside of solid floor or roof structure above unless otherwise indicated.

1. Install compressible filler in joint between top of partition and underside of structure above.
2. Wedge non-load-bearing partitions against structure above with small pieces of tile, slate, or metal. Fill joint with mortar after dead-load deflection of structure above approaches final position.
3. At fire-rated partitions, treat joint between top of partition and underside of structure above to comply with Section 079200 “Joint Sealants”.

## 3.5 MORTAR BEDDING AND JOINTING

A. Lay hollow CMUs as follows:

1. With face shells fully bedded in mortar and with head joints of depth equal to bed joints.
2. With webs fully bedded in mortar in grouted masonry, including starting course on footings.
3. With entire units, including areas under cells, fully bedded in mortar at starting course on footings where cells are not grouted.

B. Lay solid masonry units with completely filled bed and head joints; butter ends with sufficient mortar to fill head joints and shove into place. Do not deeply furrow bed joints or slush head joints.

C. Tool exposed joints slightly concave when thumbprint hard, using a jointer larger than joint thickness unless otherwise indicated.

D. Cut joints flush for masonry walls to receive plaster or other direct-applied finishes (other than paint) unless otherwise indicated.

## 3.6 MASONRY JOINT REINFORCEMENT

A. General: Install entire length of longitudinal side rods in mortar with a minimum cover of 5/8 inch on exterior side of walls, 1/2 inch elsewhere. Lap reinforcement a minimum of 6 inches.

1. Space reinforcement not more than 16 inches o.c.
2. Space reinforcement not more than 8 inches o.c. in foundation walls and parapet walls.
3. Provide reinforcement not more than 8 inches above and below wall openings and extending 12 inches beyond openings.

    a. Reinforcement above is in addition to continuous reinforcement.

B. Interrupt joint reinforcement at control and expansion joints, unless otherwise indicated.

C. Provide continuity at corners by using prefabricated L-shaped units.

D. Cut and bend reinforcing units as directed by manufacturer for continuity at returns, offsets, and other special conditions.

## 3.7 TIEING MASONRY TO STRUCTURAL MEMBERS

A. Tie masonry to structural members where masonry abuts or faces structural members to comply with the following:

1. Provide an open space between masonry and structural member, unless otherwise indicated. Keep open space free of mortar and other rigid materials.
2. Anchor masonry to structural members with 1/4-inch diameter weld-on anchor rods and 3/16-inch diameter triangular ties at 24-inch vertical spacing unless otherwise noted.
3. Space anchors as indicated.

## 3.8 ANCHORING MASONRY VENEERS

A. Anchor masonry veneers to masonry backup with masonry-veneer anchors to comply with the following requirements:

1. Connecting to masonry backup: Fasten screw-attached anchor section through cavity wall insulation to masonry backup with metal fasteners of type indicated. Prongs of anchor plate shall seat firmly against the concrete. Use two fasteners unless anchor design only uses one fastener.
2. Locate anchor sections to allow maximum vertical differential movement of ties up and down.
3. Space anchors as indicated but not more than 16 inches o.c. vertically and horizontally. Install additional anchors within 12 inches of openings and at intervals, not exceeding 8 inches around perimeter of opening.

## 3.9 CONTROL AND EXPANSION JOINTS

A. General: Install control and expansion joint materials in unit masonry as masonry progresses. Do not allow materials to span control and expansion joints without provision to allow for in-plane wall or partition movement.

B. Form control joints in concrete masonry using one of the following methods:

1. Fit bond-breaker strips into hollow contour in ends of CMUs on one side of control joint. Fill resultant core with grout and rake out joints in exposed faces for application of sealant.
2. Install preformed control-joint gaskets designed to fit standard sash block.
3. Install interlocking units designed for control joints. Install bond-breaker strips at joint. Keep head joints free and clear of mortar or rake out joint for application of sealant.
4. Install temporary foam-plastic filler in head joints and remove filler when unit masonry is complete for application of sealant.

C. Form expansion joints in brick as follows:

1. Build flanges of factory-fabricated, expansion-joint units into masonry.
2. Form open joint full depth of brick wythe and of width indicated, but not less than 3/8 inch for installation of sealant and backer rod specified in Division 07 Section "Joint Sealants."

## 3.10 LINTELS

A. Provide minimum bearing of 8 inches at each jamb unless otherwise indicated.

## 3.11 FLASHING, WEEP HOLES, CAVITY DRAINAGE, AND VENTS

A. General: Install embedded flashing and weep holes in masonry at shelf angles, lintels, other obstructions to downward flow of water in wall, and where indicated.

B. Install flashing as follows unless otherwise indicated:

1. Prepare masonry surfaces so they are smooth and free from projections that could puncture flashing. Where flashing is within mortar joint, place through-wall flashing on sloping bed of mortar and cover with mortar. Before covering with mortar, seal penetrations in flashing with adhesive, sealant, or tape as recommended by flashing manufacturer.
2. Allow no penetrations through flashings. Coordinate in advance with all trades to ensure placement of all wall-penetrating work to be above or below flashings. Do not flash and/or seal around such items if discovered when installing flashings; notify Architect and have such work relocated.
3. At multiwythe masonry walls, including cavity walls, install flashing as indicated on the drawings and any other interruption in the downward flow of moisture in the cavity. Provide weeps and cavity drainage material at all across-cavity flashings.
4. Under sills of aluminum windows, storefront and curtainwall systems install membrane flashing from inside edge of aluminum member to outside face of masonry (or slab, or extent of substrate concealed by the aluminum sill.
5. In cavities including behind brick veneer, turn flashing up substrate surface at least 8-inches (higher if recommended by the manufacturer) then terminate and seal top of flexible flashings and mechanically anchor to substrate through termination bars.
6. At lintels, extend flashing full length of lintel bearing into masonry at each end. At heads and sills, extend flashing 6 inches at ends and turn up not less than 2 inches to form end dams.
7. Lap ends of sheet metal flashing not less than 1-1/2 inches or as recommended by flashing manufacturer, and seal lap with elastomeric sealant complying with requirements of the flashing manufacturer.
8. Install metal drip edges beneath flexible flashing at exterior face of wall. Stop flexible flashing 1/2 inch from face of wall and adhere flexible flashing to top of metal drip edge. Bed metal drip edges in sealant.
9. Special condition for flashing of walls above adjacent roof, roof edges and parapets:

    a. Extend all through-wall flashings located above roof lines at least 6-inches beyond the roof edge and not less distance than the projection of roof edge metal trim, coping, or gutter.
    b. Overlap flashing steps 6-inches minimum.
    c. Do not terminate through wall flashings or provide a flashing step at inside or outside wall corners; wrap around corners at least 6-inches.
    d. At abutting parapet walls, step through-wall flashings around and above parapet in a manner that enables proper roof membrane flashing and termination.

10. Roll overlaps in self-adhering membrane flashings with 2-inch wide neoprene roller and firm pressure to ensure proper adhesion of the lap.
11. Prime surfaces of substrates to receive self-adhered membrane flashings if flashing manufacturer indicates in their literature this operation will produce superior bonding of the membrane to the substrates indicated for the Project. Do not spread bonding agents onto insulation.

C. Install weep holes in head joints in exterior wythes of first course of masonry immediately above embedded flashing and as follows:

1. Use specified weep/vent products to form weep holes.
2. Space weep holes 16 inches o.c. unless otherwise indicated.

D. Place cavity drainage material in cavities to comply with configuration requirements for cavity drainage material in Part 2 “Miscellaneous Masonry Accessories” Article.

E. Install vents in head joints in exterior wythes at spacing indicated. Use specified weep/vent products to form vents.

1. Close cavities off vertically and horizontally with blocking in manner indicated. Install through-wall flashing and weep holes above horizontal blocking.

## 3.12 REINFORCED UNIT MASONRY INSTALLATION

A. Temporary Formwork and Shores: Construct formwork and shores as needed to support reinforced masonry elements during construction.

1. Construct formwork to provide shape, line, and dimensions of completed masonry as indicated. Make forms sufficiently tight to prevent leakage of mortar and grout. Brace, tie, and support forms to maintain position and shape during construction and curing of reinforced masonry.
2. Do not remove forms and shores until reinforced masonry members have hardened sufficiently to carry their own weight and other temporary loads that may be placed on them during construction. Above windows and doors limit deflection of formwork and shores to 1/16-inch.

B. Placing Reinforcement: Comply with requirements in ACI 530.1/ASCE 6/TMS 602.

C. Grouting: Do not place grout until entire height of masonry to be grouted has attained sufficient strength to resist grout pressure.

1. Comply with requirements in ACI 530.1/ASCE 6/TMS 602 for cleanouts and for grout placement.
2. Limit height of vertical grout pours to not more than 56 inches.

## 3.13 FIELD QUALITY CONTROL

A. Contractor’s Performance Testing: Water-test cavity to verify all water is draining to the exterior through the weeps before continuing with exterior wythe or capping wall.

1. Perform tests in presence of Owner’s Agent, Architect and Owner’s testing agency representative. Representative of CMR and masonry contractor must be in attendance and perform the test. Provide at least 5-days advance notice of time a scheduled test will be performed.
2. Perform tests at locations selected by the Architect. At least three tests will be required. A least one test will be at an above-roof location. Architect may require an additional unscheduled next-day test at any time, after flashing is placed and veneer above flashing is just starting; regardless of unanticipated interruption of veneer work, comply with test procedures.
3. Test Procedures:

a. Extend veneer wythe 8-inches minimum and 12-inch maximum, above flashing to perform test.
b. Hold water hose and continuously discharge at standard water pressure force into the cavity at a cell vent so that water can be observed discharging from adjacent weeps for a period of five minutes minimum.
c. Continue down the wall to the next cell vent where water has not been observed discharging and repeat the test for the same time period.
d. Continue repeating this process until entire flashing length has been tested and passed.
e. Photo-document the testing. Permit and assist other test observers to photograph test.
f. Water observed inside the building, or water outside the building at locations other than at weeps will constitute a test failure.

4. In the event of test failure, remove the masonry veneer down to the flashing, inspect and repair or replace the flashing, relay veneer to required test-height and re-perform the water test.
5. Failure of one test location will mandate higher frequency and number of tests to be performed at no additional cost to Owner or others.

B. Owner's Testing and Inspecting: Owner will engage special inspectors to perform tests and inspections and prepare reports. Allow inspectors access to scaffolding and work areas, as needed to perform tests and inspections. Retesting of materials that fail to comply with specified requirements shall be done at Contractor's expense.

C. Inspections: Level 1 special inspections according to the "International Building Code."

1. Place grout only after inspectors have verified compliance of grout spaces and of grades, sizes, and locations of reinforcement.
2. Place grout only after inspectors have verified proportions of site-prepared grout.
3. Payment for these serves will be made by Owner.
4. Retesting of materials failing to comply with specified requirements shall be done at Contractor's expense.

D. Testing Frequency: One set of tests for each 5000 sq. ft. of wall area or portion thereof.

E. Concrete Masonry Unit Test: For each type of unit provided, per ASTM C 140.

F. Mortar Test (Property Specification): For each mix provided, per ASTM C 1714/C 1714M.

G. Grout Test (Compressive Strength): For each mix provided, per ASTM C 1019.

## 3.14 REPAIRING, POINTING, AND CLEANING

A. Remove and replace masonry units that are loose, chipped, broken, stained, or otherwise damaged or that do not match adjoining units. Install new units to match adjoining units; install in fresh mortar, pointed to eliminate evidence of replacement.

B. Pointing: During the tooling of joints, enlarge voids and holes, except weep holes, and completely fill with mortar. Point up joints, including corners, openings, and adjacent

construction, to provide a neat, uniform appearance. Prepare joints for sealant application, where indicated.

C. In-Progress Cleaning: Clean unit masonry as work progresses by dry brushing to remove mortar fins and smears before tooling joints.

D. Final Cleaning: After mortar is thoroughly set and cured, clean exposed masonry as follows:

1. Remove large mortar particles by hand with wooden paddles and nonmetallic scrape hoes or chisels.
2. Test cleaning methods on sample wall panel; leave one-half of panel uncleaned for comparison purposes. Obtain Architect's approval of sample cleaning before proceeding with cleaning of masonry.
3. Protect adjacent stone and nonmasonry surfaces from contact with cleaner by covering them with liquid strippable masking agent or polyethylene film and waterproof masking tape.
4. Wet wall surfaces with water before applying cleaners; remove cleaners promptly by rinsing surfaces thoroughly with clear water.
5. Clean brick by bucket-and-brush hand-cleaning method described in BIA Technical Notes 20.
6. Clean concrete masonry by cleaning method indicated in NCMA TEK 8-2A applicable to type of stain on exposed surfaces.

## 3.15 MASONRY WASTE DISPOSAL

A. Salvageable Materials: Unless otherwise indicated, excess masonry materials are Contractor's property. At completion of unit masonry work, remove from Project site.

B. Waste Disposal as Fill Material: Dispose of clean masonry waste, including excess or soil-contaminated sand, waste mortar, and broken masonry units, by crushing and mixing with fill material as fill is placed.

1. Crush masonry waste to less than 4 inches in each dimension.
2. Mix masonry waste with at least two parts of specified fill material for each part of masonry waste. Fill material is specified in Section 312000 "Earth Moving."
3. Do not dispose of masonry waste as fill within 18 inches of finished grade.

C. Excess Masonry Waste: Remove excess clean masonry waste that cannot be used as fill, as described above, and other masonry waste, and legally dispose of off Owner's property.

END OF SECTION 042000

# SECTION 051200 - STRUCTURAL STEEL FRAMING

## PART 1 - GENERAL

### 1.1 RELATED DOCUMENTS

A. Drawings and general provisions of the Contract, including General and Supplementary Conditions and Division 01 Specification Sections, apply to this Section.

### 1.2 SUMMARY

A. This Section includes the following:

1. Structural steel.
2. Grout.

B. Related Sections include the following:

1. Division 05 Section “Metal Stairs” for steel stair treads, stair framing and railings.
2. Division 05 Section "Steel Decking".
3. Division 05 Section "Metal Fabrications" for steel lintels or shelf angles not attached to structural-steel frame miscellaneous steel fabrications and other metal items not defined as structural steel.
4. Division 05 Section “Steel Joists”.

### 1.3 DEFINITIONS

A. Structural Steel: Elements of structural-steel frame, as classified by AISC's "Code of Standard Practice for Steel Buildings and Bridges," that support design loads.

### 1.4 PROJECT CONDITIONS

A. DOMESTIC STEEL USE REQUIREMENTS AS SPECIFIED IN SECTION 153.011 OF THE REVISED CODE APPLY TO THIS PROJECT. COPIES OF SECTION 153.011 CAN BE OBTAINED FROM ANY OF THE OFFICES OF THE DEPARTMENT OF ADMINISTRATIVE SERVICES.

### 1.5 PERFORMANCE REQUIREMENTS

A. Connections: Provide details of simple shear connections required by the Contract Documents to be selected or completed by structural-steel fabricator to withstand ASD-service loads indicated and comply with other information and restrictions indicated.

1. Select and complete connections using schematic details indicated and AISC's "Manual of Steel Construction, Allowable Stress Design," Part 4.

2. Engineering Responsibility: Fabricator's responsibilities include using a qualified professional engineer to prepare structural analysis data for structural-steel connections.

B. Construction: Type 2 simple framing.

1.6 SUBMITTALS

A. Product Data: For each type of product indicated.

B. Shop Drawings: Show fabrication of structural-steel components.

1. Include details of cuts, connections, splices, camber, holes, and other pertinent data.
2. Include embedment drawings.
3. Indicate welds by standard AWS symbols, distinguishing between shop and field welds, and show size, length, and type of each weld.
4. Indicate type, size, and length of bolts, distinguishing between shop and field bolts. Identify pretensioned and slip-critical high-strength bolted connections.
5. For structural-steel connections indicated to comply with design loads, include structural analysis data signed and sealed by the qualified professional engineer responsible for their preparation.
6. The following statements shall be placed on the front cover or initial sheet of each shop drawing submittal:

Steel Fabricator Certification

The steel fabricator identified below certifies that for this project all load-bearing structural steel (as defined by the State of Ohio Department of Administrative Services, Directive Number 01-30, dated August 31, 2001) has been fabricated or produced, to the best of its knowledge, only from steel made in the United States in accordance with Sections 153.011 and 153.99, of the Ohio Revised Code (ORC). Further, the steel fabricator hereby certifies that it has read and understands that a monetary penalty for violations may be imposed under the authority of the referenced sections of the ORC.

[Printed or Typed Name of Fabrication Company]
by
[Printed or typed Name of Company Official]

_____ _____
Signature of Company Official Date

C. Welding certificates.

D. Qualification data for firms and persons specified in the "Quality Assurance" Article to demonstrate their capabilities and experience. Include list of not less than (3) comparable projects completed within the last (5) years, with project names and addresses, names and addresses of architects and owners with reference contact names, and scope of work performed.

E. Mill Test Reports: Signed by manufacturers certifying that the following products comply with requirements:

1. Structural steel including chemical and physical properties.
2. Bolts, nuts, and washers including mechanical properties and chemical analysis.
3. Direct-tension indicators.
4. Tension-control, high-strength bolt-nut-washer assemblies.
5. Shear stud connectors.
6. Shop primers.
7. Nonshrink grout.

F. Source quality-control test reports.

## 1.7 QUALITY ASSURANCE

A. Installer Qualifications: A qualified firm with not less than (10) years of successful experience in comparable steel installation projects and employing personnel skilled in the installation processes and operations indicated.

B. Fabricator Qualifications: A qualified firm with not less than (10) years of successful experience in comparable steel fabrication projects and employing personnel skilled in the fabrication processes and operations indicated.

C. Welding: Qualify procedures and personnel according to AWS D1.1, "Structural Welding Code--Steel."

D. Comply with applicable provisions of the following specifications and documents:

1. AISC's "Code of Standard Practice for Steel Buildings and Bridges."
2. AISC's "Seismic Provisions for Structural Steel Buildings" and "Supplement No. 2."
3. AISC's "Specification for Structural Steel Buildings--Allowable Stress Design and Plastic Design."
4. AISC's "Specification for the Design of Steel Hollow Structural Sections."
5. AISC's "Specification for Allowable Stress Design of Single-Angle Members."
6. RCSC's "Specification for Structural Joints Using ASTM A 325 or A 490 Bolts."

## 1.8 DELIVERY, STORAGE, AND HANDLING

A. Store materials to permit easy access for inspection and identification. Keep steel members off ground and spaced by using pallets, dunnage, or other supports and spacers. Protect steel members and packaged materials from erosion and deterioration.

1. Store fasteners in a protected place. Clean and relubricate bolts and nuts that become dry or rusty before use.
2. Do not store materials on structure in a manner that might cause distortion, damage, or overload to members or supporting structures. Repair or replace damaged materials or structures as directed.

1.9 COORDINATION

A. Furnish anchorage items to be embedded in or attached to other construction without delaying the Work. Provide setting diagrams, sheet metal templates, instructions, and directions for installation.

PART 2 - PRODUCTS

2.1 STRUCTURAL-STEEL MATERIALS

A. W-Shapes: ASTM A 992.

B. Channels, Angles: ASTM A 36.

C. Plate and Bar: ASTM A 36.

D. Cold-Formed Hollow Structural Sections: ASTM A 500, Grade B, structural tubing.

E. Welding Electrodes: Comply with AWS requirements.

F. Recycled Content of Steel Products: Provide products with an average recycled content of steel products so post-consumer recycled content plus one-half of pre-consumer recycled content is not less than the following:

1. W-Shapes: 80 percent.
2. Channels, Angles, Shapes: 30 percent.
3. Plate and Bar: 30 percent.
4. Cold-Formed Hollow Structural Sections: 30 percent.
5. Steel Pipe: 30 percent.
6. All Other Steel Materials: 30 percent.

2.2 BOLTS, CONNECTORS, AND ANCHORS

A. High-Strength Bolts, Nuts, and Washers: ASTM A 325, Type 1, heavy hex steel structural bolts; ASTM A 563 heavy hex carbon-steel nuts; and ASTM F 436 hardened carbon-steel washers.

1. Finish: Plain.

B. Low-Emitting Materials: Paints and coatings shall comply with the testing and product requirements of the California Department of Health Services' "Standard Practice for the Testing of Volatile Organic Emissions from Various Sources Using Small-Scale Environmental Chambers."

C. Unheaded Anchor Rods: ASTM F 1554, Grade 36.

1. Configuration: Straight.
2. Nuts: ASTM A 563 hex carbon steel.

3. Plate Washers: ASTM A 36 carbon steel.
4. Washers: ASTM F 436 hardened carbon steel.
5. Finish: Plain.

## 2.3 PRIMER

A. Primer: SSPC – Paint 25, Type II, iron oxide, zinc oxide, raw linseed oil and alkyd.

B. Galvanizing Repair Paint: ASTM A 780.

C. Low-Emitting Materials: Paints and coatings shall comply with the testing and product requirements of the California Department of Health Services' "Standard Practice for the Testing of Volatile Organic Emissions from Various Sources Using Small-Scale Environmental Chambers."

## 2.4 GROUT

A. Nonmetallic, Shrinkage-Resistant Grout: ASTM C 1107, factory-packaged, nonmetallic aggregate grout, noncorrosive, nonstaining, mixed with water to consistency suitable for application and a 30-minute working time.

## 2.5 FABRICATION

A. Structural Steel: Fabricate and assemble in shop to greatest extent possible. Fabricate according to AISC's "Code of Standard Practice for Steel Buildings and Bridges" and AISC's "Specification for Structural Steel Buildings--Allowable Stress Design and Plastic Design."

1. Camber structural-steel members where indicated.
2. Identify high-strength structural steel according to ASTM A 6 and maintain markings until structural steel has been erected.
3. Mark and match-mark materials for field assembly.
4. Complete structural-steel assemblies, including welding of units, before starting shop-priming operations.

B. Thermal Cutting: Perform thermal cutting by machine to greatest extent possible.

1. Plane thermally cut edges to be welded to comply with requirements in AWS D1.1.

C. Bolt Holes: Cut, drill or punch standard bolt holes perpendicular to metal surfaces.

D. Finishing: Accurately finish ends of columns and other members transmitting bearing loads.

E. Cleaning: Clean and prepare steel surfaces that are to remain unpainted according to SSPC-SP 2, "Hand Tool Cleaning."

F. Steel Wall-Opening Framing: Select true and straight members for fabricating steel wall-opening framing to be attached to structural steel. Straighten as required to provide uniform, square, and true members in completed wall framing.

G. Welded Door Frames: Build up welded door frames attached to structural steel. Weld exposed joints continuously and grind smooth. Plug-weld fixed steel bar stops to frames. Secure removable stops to frames with countersunk, cross-recessed head machine screws, uniformly spaced not more than 10 inches o.c., unless otherwise indicated.

H. Holes: Provide holes required for securing other work to structural steel and for passage of other work through steel framing members.

1. Cut, drill, or punch holes perpendicular to steel surfaces. Do not thermally cut bolt holes or enlarge holes by burning.
2. Base-Plate Holes: Cut, drill, mechanically thermal cut, or punch holes perpendicular to steel surfaces.
3. Weld threaded nuts to framing and other specialty items indicated to receive other work.

## 2.6 SHOP CONNECTIONS

A. High-Strength Bolts: Shop install high-strength bolts according to RCSC's "Specification for Structural Joints Using ASTM A 325 or A 490 Bolts" for type of bolt and type of joint specified.

1. Joint Type: Snug tightened unless indicated as Pretensioned.

B. Weld Connections: Comply with AWS D1.1 for welding procedure specifications, tolerances, appearance, and quality of welds and for methods used in correcting welding work.

1. Remove backing bars or runoff tabs, back gouge, and grind steel smooth.
2. Assemble and weld built-up sections by methods that will maintain true alignment of axes without exceeding tolerances of AISC's "Code of Standard Practice for Steel Buildings and Bridges" for mill material.
3. Verify that weld sizes, fabrication sequence, and equipment used for architecturally exposed structural steel will limit distortions to allowable tolerances. Prevent weld show-through on exposed steel surfaces.

a. Grind butt welds flush.
b. Grind or fill exposed fillet welds to smooth profile. Dress exposed welds.

## 2.7 SHOP PRIMING

A. Shop prime steel surfaces except the following:

1. Surfaces embedded in concrete or mortar. Extend priming of partially embedded members to a depth of 2 inches.
2. Surfaces to be field welded.
3. Surfaces to be high-strength bolted with slip-critical connections.
4. Surfaces to receive sprayed fire-resistive materials.
5. Galvanized surfaces.

B. Surface Preparation: Clean surfaces to be painted. Remove loose rust and mill scale and spatter, slag, or flux deposits. Prepare surfaces according to the following specifications and standards:

1. SSPC-SP 2, "Hand Tool Cleaning."

C. Priming: Immediately after surface preparation, apply primer according to manufacturer's written instructions and at rate recommended by SSPC to provide a dry film thickness of not less than 1.5 mils. Use priming methods that result in full coverage of joints, corners, edges, and exposed surfaces.

1. Stripe paint corners, crevices, bolts, welds, and sharp edges.
2. Apply two coats of shop paint to inaccessible surfaces after assembly or erection. Change color of second coat to distinguish it from first.

D. Painting: Apply a 1-coat, nonasphaltic primer complying with SSPC-PS Guide 7.00, "Painting System Guide 7.00: Guide for Selecting One-Coat Shop Painting Systems," to provide a dry film thickness of not less than 1.5 mils.

## 2.8 GALVANIZING

A. Hot-Dip Galvanized Finish: Apply zinc coating by the hot-dip process to structural steel according to ASTM A 123.

1. Fill vent holes and grind smooth after galvanizing.
2. Galvanize lintels and shelf angles attached to structural-steel frame and located in exterior walls.

## 2.9 SOURCE QUALITY CONTROL

A. Engage an independent testing and inspecting agency to perform shop tests and inspections and prepare test reports.

1. Provide testing agency with access to places where structural-steel work is being fabricated or produced to perform tests and inspections.

B. Correct deficiencies in Work that test reports and inspections indicate does not comply with the Contract Documents.

C. Bolted Connections: Shop-bolted connections will be tested and inspected according to RCSC's "Specification for Structural Joints Using ASTM A 325 or A 490 Bolts."

D. Welded Connections: In addition to visual inspection, shop-welded connections will be tested and inspected according to AWS D1.1 and the following inspection procedures, at testing agency's option:

1. Liquid Penetrant Inspection: ASTM E 165.
2. Magnetic Particle Inspection: ASTM E 709; performed on root pass and on finished weld. Cracks or zones of incomplete fusion or penetration will not be accepted.

3. Ultrasonic Inspection: ASTM E 164.
4. Radiographic Inspection: ASTM E 94.

E. In addition to visual inspection, shop-welded shear connectors will be tested and inspected according to requirements in AWS D1.1 for stud welding and as follows:

1. Bend tests will be performed if visual inspections reveal either a less-than- continuous 360-degree flash or welding repairs to any shear connector.
2. Tests will be conducted on additional shear connectors if weld fracture occurs on shear connectors already tested, according to requirements in AWS D1.1.

PART 3 - EXECUTION

3.1 EXAMINATION

A. Verify elevations of concrete- and masonry-bearing surfaces and locations of anchor rods, bearing plates, and other embedments, with steel erector present, for compliance with requirements.

B. Proceed with installation only after unsatisfactory conditions have been corrected.

3.2 PREPARATION

A. Provide temporary shores, guys, braces, and other supports during erection to keep structural steel secure, plumb, and in alignment against temporary construction loads and loads equal in intensity to design loads. Remove temporary supports when permanent structural steel, connections, and bracing are in place, unless otherwise indicated.

1. Do not remove temporary shoring supporting composite deck construction until cast-in-place concrete has attained its design compressive strength.

3.3 ERECTION

A. Set structural steel accurately in locations and to elevations indicated and according to AISC's "Code of Standard Practice for Steel Buildings and Bridges" and "Specification for Structural Steel Buildings--Allowable Stress Design and Plastic Design."

B. Base and Bearing Plates: Clean concrete- and masonry-bearing surfaces of bond-reducing materials, and roughen surfaces prior to setting base and bearing plates. Clean bottom surface of base and bearing plates.

1. Set base and bearing plates for structural members on wedges, shims, or setting nuts as required.
2. Weld plate washers to top of base plate.
3. Snug-tighten anchor rods after supported members have been positioned and plumbed. Do not remove wedges or shims but, if protruding, cut off flush with edge of base or bearing plate before packing with grout.

4. Promptly pack grout solidly between bearing surfaces and base or bearing plates so no voids remain. Neatly finish exposed surfaces; protect grout and allow to cure. Comply with manufacturer's written installation instructions for shrinkage-resistant grouts.

C. Maintain erection tolerances of structural steel and architecturally exposed structural steel within AISC's "Code of Standard Practice for Steel Buildings and Bridges."

D. Align and adjust various members forming part of complete frame or structure before permanently fastening. Before assembly, clean bearing surfaces and other surfaces that will be in permanent contact with members. Perform necessary adjustments to compensate for discrepancies in elevations and alignment.

1. Level and plumb individual members of structure.
2. Make allowances for difference between temperature at time of erection and mean temperature when structure is completed and in service.

E. Splice members only where indicated.

F. Remove erection bolts on welded, architecturally exposed structural steel; fill holes with plug welds; and grind smooth at exposed surfaces.

G. Finish thermally cut sections within smoothness limits in AWS D1.1.

H. Do not enlarge unfair holes in members by burning or using drift pins. Ream holes that must be enlarged to admit bolts.

I. Shear Connectors: Prepare steel surfaces as recommended by manufacturer of shear connectors. Use automatic end welding of headed-stud shear connectors according to AWS D1.1 and manufacturer's written instructions.

## 3.4 FIELD CONNECTIONS

A. High-Strength Bolts: Shop install high-strength bolts according to RCSC's "Specification for Structural Joints Using ASTM A 325 or A 490 Bolts" for type of bolt and type of joint specified.

1. Joint Type: Snug tightened unless noted as Pretensioned or Slip critical.

B. Weld Connections: Comply with AWS D1.1 for welding procedure specifications, tolerances, appearance, and quality of welds and for methods used in correcting welding work.

1. Comply with AISC's "Code of Standard Practice for Steel Buildings and Bridges" and "Specification for Structural Steel Buildings--Allowable Stress Design and Plastic Design" for bearing, adequacy of temporary connections, alignment, and removal of paint on surfaces adjacent to field welds.
2. Remove backing bars or runoff tabs, back gouge, and grind steel smooth.
3. Assemble and weld built-up sections by methods that will maintain true alignment of axes without exceeding tolerances of AISC's "Code of Standard Practice for Steel Buildings and Bridges" for mill material.

4. Verify that weld sizes, fabrication sequence, and equipment used for architecturally exposed structural steel will limit distortions to allowable tolerances. Prevent weld show-through on exposed steel surfaces.

    a. Grind butt welds flush.
    b. Grind or fill exposed fillet welds to smooth profile. Dress exposed welds.

## 3.5 FIELD QUALITY CONTROL

A. Testing Agency: Owner shall engage a qualified independent testing and inspecting agency to inspect field welds and high-strength bolted connections.

B. Bolted Connections: Shop-bolted connections will be tested and inspected according to RCSC's "Specification for Structural Joints Using ASTM A 325 or A 490 Bolts."

C. Welded Connections: Field welds will be visually inspected according to AWS D1.1.

1. In addition to visual inspection, field welds will be tested according to AWS D1.1 and the following inspection procedures, at testing agency's option:

    a. Liquid Penetrant Inspection: ASTM E 165.
    b. Magnetic Particle Inspection: ASTM E 709; performed on root pass and on finished weld. Cracks or zones of incomplete fusion or penetration will not be accepted.
    c. Ultrasonic Inspection: ASTM E 164.
    d. Radiographic Inspection: ASTM E 94.

D. In addition to visual inspection, test and inspect field-welded shear connectors according to requirements in AWS D1.1 for stud welding and as follows:

1. Perform bend tests if visual inspections reveal either a less-than- continuous 360-degree flash or welding repairs to any shear connector.
2. Conduct tests on additional shear connectors if weld fracture occurs on shear connectors already tested, according to requirements in AWS D1.1.

E. Correct deficiencies in Work that test reports and inspections indicate does not comply with the Contract Documents.

## 3.6 REPAIRS AND PROTECTION

A. Repair damaged galvanized coatings on galvanized items with galvanized repair paint according to ASTM A 780 and manufacturer's written instructions.

B. Touchup Painting: After installation, promptly clean, prepare, and prime or reprime field connections, rust spots, and abraded surfaces of prime-painted joists and accessories, bearing plates, and abutting structural steel.

1. Clean and prepare surfaces by SSPC-SP 2 hand-tool cleaning or SSPC-SP 3 power-tool cleaning.

2. Apply a compatible primer of same type as shop primer used on adjacent surfaces.

C. Touchup Painting: Cleaning and touchup painting are specified in Division 09 painting Sections.

END OF SECTION 051200

# SSECTION 052100 - STEEL JOISTS FRAMING

## PART 1 - GENERAL

### 1.1 RELATED DOCUMENTS

A. Drawings and general provisions of the Contract, including General and Supplementary Conditions and Division 01 Specification Sections, apply to this Section.

### 1.2 SUMMARY

A. This Section includes the following:

1. K-series steel joists.
2. KCS-type K-series steel joists.
3. Joist accessories.

B. Related Sections include the following:

1. Division 03 Section "Cast-in-Place Concrete" for installing bearing plates in concrete.
2. Division 04 Section "Unit Masonry" for installing bearing plates in unit masonry.

### 1.3 DEFINITIONS

A. SJI "Specifications": Steel Joist Institute's "Standard Specifications, Load Tables and Weight Tables for Steel Joists and Joist Girders."

B. Special Joists: Steel joists or joist girders requiring modification by manufacturer to support nonuniform, unequal, or special loading conditions that invalidate load tables in SJI's "Specifications."

### 1.4 PERFORMANCE REQUIREMENTS

A. Structural Performance: Provide special joists and connections capable of withstanding design loads indicated.

B. Design special joists to withstand design loads with live load deflections no greater than the following:

1. Roof Joists: Vertical deflection of 1/240 of the span.

### 1.5 SUBMITTALS

A. Product Data: For each type of joist, accessory, and product indicated.

B. Shop Drawings: Show layout, designation, number, type, location, and spacings of joists. Include joining and anchorage details, bracing, bridging, joist accessories; splice and connection locations and details; and attachments to other construction.

1. Indicate locations and details of bearing plates to be embedded in other construction.
2. Comprehensive engineering analysis of special joists signed and sealed by the qualified professional engineer responsible for its preparation.

C. Welding certificates.

D. Manufacturer Certificates: Signed by manufacturers certifying that joists comply with requirements.

E. Mill Certificates: Signed by bolt manufacturers certifying that bolts comply with requirements.

F. Qualification Data: For manufacturer.

G. Field quality-control test and inspection reports.

H. Research/Evaluation Reports: For joists.

## 1.6 QUALITY ASSURANCE

A. Manufacturer Qualifications: A manufacturer certified by SJI to manufacture joists complying with applicable standard specifications and load tables of SJI "Specifications."

1. Manufacturer's responsibilities include providing professional engineering services for designing special joists to comply with performance requirements.

B. SJI Specifications: Comply with standard specifications in SJI's "Specifications" that are applicable to types of joists indicated.

C. Welding: Qualify procedures and personnel according to AWS D1.1/D1.1M, "Structural Welding Code - Steel."

## 1.7 DELIVERY, STORAGE, AND HANDLING

A. Deliver, store, and handle joists as recommended in SJI's "Specifications."

B. Protect joists from corrosion, deformation, and other damage during delivery, storage, and handling.

## 1.8 SEQUENCING

A. Deliver steel bearing plates to be built into masonry construction.

PART 2 - PRODUCTS

2.1 MATERIALS

A. Steel: Comply with SJI's "Specifications" for web and steel-angle chord members.

1. Yield strength used as a basis for the design stresses shall be as follows:
   a. Chords = 50,000 psi.
   b. Webs = 36,000 psi or 50,000 psi

B. Steel Bearing Plates: ASTM A 36.

C. Carbon-Steel Bolts and Threaded Fasteners: ASTM A 307, Grade A, carbon-steel, hex-head bolts and threaded fasteners; carbon-steel nuts; and flat, unhardened steel washers.

1. Finish: Plain, uncoated.

D. High-Strength Bolts, Nuts, and Washers: ASTM A 325, Type 1, heavy hex steel structural bolts; ASTM A 563 heavy hex carbon-steel nuts; and ASTM F 436 hardened carbon-steel washers.

1. Finish: Plain, uncoated.

E. Welding Electrodes: Comply with AWS standards.

F. Recycled Content of Steel Products: Postconsumer recycled content plus one-half of preconsumer recycled content not less than 90%.

2.2 PRIMERS

A. Primer: SSPC-Paint 15, or manufacturer's standard shop primer complying with performance requirements in SSPC-Paint 15.

B. Low-Emitting Materials: Paints and coatings shall comply with the testing and product requirements of the California Department of Health Services' "Standard Practice for the Testing of Volatile Organic Emissions from Various Sources Using Small-Scale Environmental Chambers."

2.3 K-SERIES STEEL JOISTS

A. Manufacture steel joists of type indicated according to "Standard Specifications for Open Web Steel Joists, K-Series" in SJI's "Specifications," with steel-angle top- and bottom-chord members, underslung ends, and parallel top chord.

1. Joist Type: K-series steel joists and KCS-type K-series steel joists.

B. Comply with AWS requirements and procedures for shop welding, appearance, quality of welds, and methods used in correcting welding work.

C. Provide holes in chord members for connecting and securing other construction to joists.

D. Camber joists according to SJI's "Specifications."

E. Equip bearing ends of joists with manufacturer's standard beveled ends or sloped shoes if joist slope exceeds 1/4 inch per 12 inches (1:48).

## 2.4 JOIST ACCESSORIES

A. Bridging: Schematically indicated. Detail and fabricate according to SJI's "Specifications." Furnish additional erection bridging if required for stability.

B. Fabricate steel bearing plates with integral anchorages of sizes and thicknesses indicated. Shop prime paint.

C. Steel bearing plates with integral anchorages are specified in Division 05 Section "Metal Fabrications."

D. Supply ceiling extensions, either extended bottom-chord elements or a separate extension unit of enough strength to support ceiling construction. Extend ends to within 1/2 inch (13 mm) of finished wall surface, unless otherwise indicated.

E. Supply miscellaneous accessories, including splice plates and bolts required by joist manufacturer to complete joist installation.

## 2.5 CLEANING AND SHOP PAINTING

A. Clean and remove loose scale, heavy rust, and other foreign materials from fabricated joists and accessories by hand-tool cleaning, SSPC-SP 2.

B. Apply 1 coat of shop primer to joists and joist accessories to be primed to provide a continuous, dry paint film not less than 1 mil thick.

# PART 3 - EXECUTION

## 3.1 EXAMINATION

A. Examine supporting substrates, embedded bearing plates, and abutting structural framing for compliance with requirements for installation tolerances and other conditions affecting performance.

1. Proceed with installation only after unsatisfactory conditions have been corrected.

## 3.2 INSTALLATION

A. Do not install joists until supporting construction is in place and secured.

B. Install joists and accessories plumb, square, and true to line; securely fasten to supporting construction according to SJI's "Specifications," joist manufacturer's written recommendations, and requirements in this Section.

1. Before installation, splice joists delivered to Project site in more than one piece.
2. Space, adjust, and align joists accurately in location before permanently fastening.
3. Install temporary bracing and erection bridging, connections, and anchors to ensure that joists are stabilized during construction.
4. Delay rigidly connecting bottom-chord extensions to columns or supports until dead loads have been applied.

C. Field weld joists to supporting steel bearing plates and framework. Coordinate welding sequence and procedure with placement of joists. Comply with AWS requirements and procedures for welding, appearance and quality of welds, and methods used in correcting welding work.

D. Bolt joists to supporting steel framework using carbon-steel bolts.

E. Bolt joists to supporting steel framework using high-strength structural bolts. Comply with RCSC's "Specification for Structural Joints Using ASTM A 325 or ASTM A 490 Bolts" for high-strength structural bolt installation and tightening requirements.

F. Install and connect bridging concurrently with joist erection, before construction loads are applied. Anchor ends of bridging lines at top and bottom chords if terminating at walls or beams.

## 3.3 FIELD QUALITY CONTROL

A. Testing Agency: Owner shall engage a qualified independent testing and inspecting agency to inspect field welds and bolted connections and to perform field tests and inspections and prepare test and inspection reports.

B. Field welds will be visually inspected according to AWS D1.1.

C. In addition to visual inspection, field welds will be tested according to AWS D1.1 and the following procedures, as applicable:

1. Radiographic Testing: ASTM E 94.
2. Magnetic Particle Inspection: ASTM E 709.
3. Ultrasonic Testing: ASTM E 164.
4. Liquid Penetrant Inspection: ASTM E 165.

D. Bolted connections will be visually inspected.

E. High-strength, field-bolted connections will be tested and verified according to procedures in RCSC's "Specification for Structural Joints Using ASTM A 325 or ASTM A 490 Bolts."

F. Correct deficiencies in Work that test and inspection reports have indicated are not in compliance with specified requirements.

G. Additional testing will be performed to determine compliance of corrected Work with specified requirements.

## 3.4 REPAIRS AND PROTECTION

A. Repair damaged galvanized coatings on galvanized items with galvanized repair paint according to ASTM A 780 and manufacturer's written instructions.

B. Touchup Painting: After installation, promptly clean, prepare, and prime or reprime field connections, rust spots, and abraded surfaces of prime-painted joists, bearing plates, abutting structural steel, and accessories.

1. Clean and prepare surfaces by hand-tool cleaning, SSPC-SP 2, or power-tool cleaning, SSPC-SP 3.
2. Apply a compatible primer of same type as shop primer used on adjacent surfaces.

C. Provide final protection and maintain conditions, in a manner acceptable to manufacturer and Installer, that ensure that joists and accessories are without damage or deterioration at time of Final Completion.

END OF SECTION 052100

# SECTION 053100 - STEEL DECKING

## PART 1 - GENERAL

### 1.1 RELATED DOCUMENTS

A. Drawings and general provisions of the Contract, including General and Supplementary Conditions and Division 01 Specification Sections, apply to this Section.

### 1.2 SUMMARY

A. This Section includes the following:

1. Roof deck.

B. Related Sections include the following:

1. Division 03 Section "Cast-in-Place Concrete" for concrete fill.
2. Division 05 Section "Structural Steel Framing" for shop- and field-welded shear connectors.
3. Division 05 Section "Metal Fabrications" for framing deck openings with miscellaneous steel shapes.
4. Division 09 painting Sections for repair painting of primed deck.

### 1.3 SUBMITTALS

A. Product Data: For each type of deck, accessory, and product indicated.

B. Shop Drawings: Show layout and types of deck panels, anchorage details, reinforcing channels, pans, cut deck openings, special jointing, accessories, and attachments to other construction.

C. Product Certificates: For each type of steel deck, signed by product manufacturer.

D. Welding certificates.

E. Field quality-control test and inspection reports.

F. Product Test Reports: Based on evaluation of comprehensive tests performed by a qualified testing agency, indicating that each of the following complies with requirements:

1. Power-actuated mechanical fasteners.

G. Research/Evaluation Reports: For steel deck. Evidence of steel deck’s compliance with building code in effect for the project, from a model code organization acceptable to the authorities having jurisdiction.

1.4 QUALITY ASSURANCE

A. Testing Agency Qualifications: An independent agency qualified according to ASTM E 329 for testing indicated.

B. Welding: Qualify procedures and personnel according to AWS D1.3, "Structural Welding Code - Sheet Steel."

C. Fire-Test-Response Characteristics: Where indicated, provide steel deck units identical to those tested for fire resistance per ASTM E 119 by a testing and inspecting agency acceptable to authorities having jurisdiction.

1. Fire-Resistance Ratings: Indicated by design designations of applicable testing and inspecting agency.
2. Steel deck units shall be identified with appropriate markings of applicable testing and inspecting agency.

D. AISI Specifications: Comply with calculated structural characteristics of steel deck according to AISI's "North American Specification for the Design of Cold-Formed Steel Structural Members."

E. FMG Listing: Provide steel roof deck evaluated by FMG and listed in its "Approval Guide, Building Materials" for Class 1 fire rating and Class 1-90 windstorm ratings.

1.5 DELIVERY, STORAGE, AND HANDLING

A. Protect steel deck from corrosion, deformation, and other damage during delivery, storage, and handling.

B. Stack steel deck on platforms or pallets and slope to provide drainage. Protect with a waterproof covering and ventilate to avoid condensation.

1. Protect and ventilate acoustical cellular roof deck with factory-installed insulation to maintain insulation free of moisture.

PART 2 - PRODUCTS

2.1 MANUFACTURERS

A. Available Manufacturers: Subject to compliance with requirements, manufacturers offering products that may be incorporated into the Work include, but are not limited to, the following:

1. Steel Deck:
   a. Canam Steel Corp.;The Canam Manac Group.
   b. Consolidated Systems, Inc.
   c. Epic Metals Corporation.
   d. New Millennium Building Systems, LLC.
   e. Nucor Corp.; Vulcraft Division.

f. Roof Deck, Inc.
g. United Steel Deck, Inc.
h. Valley Joist; Division of EBSCO Industries, Inc.
i. Wheeling Corrugating Company; Div. of Wheeling-Pittsburgh Steel Corporation.

## 2.2 ROOF DECK

A. Steel Roof Deck: Fabricate panels, without top-flange stiffening grooves, to comply with "SDI Specifications and Commentary for Steel Roof Deck," in SDI Publication No. 30, and with the following:

1. Galvanized Steel Sheet: ASTM A 653, Structural Steel (SS), Grade 33, G60 zinc coating.
2. Deck Profile: Type WR, wide rib.
3. Profile Depth: 1-1/2 inches.
4. Span Condition: Double span
5. Side Laps: Overlapped.

## 2.3 MATERIALS

A. Recycled Content of Steel Products: Postconsumer recycled content plus one-half of preconsumer recycled content not less than 30 percent.

B. Low-Emitting Materials: Paints and coatings shall comply with the testing and product requirements of the California Department of Health Services' "Standard Practice for the Testing of Volatile Organic Emissions from Various Sources Using Small-Scale Environmental Chambers."

# PART 3 - EXECUTION

## 3.1 EXAMINATION

A. Examine supporting frame and field conditions for compliance with requirements for installation tolerances and other conditions affecting performance.

## 3.2 INSTALLATION, GENERAL

A. Install deck panels and accessories according to applicable specifications and commentary in SDI Publication No. 30, manufacturer's written instructions, and requirements in this Section.

B. Install temporary shoring before placing deck panels, if required to meet deflection limitations.

C. Locate deck bundles to prevent overloading of supporting members.

D. Place deck panels on supporting frame and adjust to final position with ends accurately aligned and bearing on supporting frame before being permanently fastened. Do not stretch or contract side-lap interlocks.

1. Align cellular deck panels over full length of cell runs and align cells at ends of abutting panels.

E. Place deck panels flat and square and fasten to supporting frame without warp or deflection.

F. Cut and neatly fit deck panels and accessories around openings and other work projecting through or adjacent to deck.

G. Provide additional reinforcement and closure pieces at openings as required for strength, continuity of deck, and support of other work.

H. Comply with AWS requirements and procedures for manual shielded metal arc welding, appearance and quality of welds, and methods used for correcting welding work.

I. Mechanical fasteners may be used in lieu of welding to fasten deck. Locate mechanical fasteners and install according to deck manufacturer's written instructions.

## 3.3 ROOF-DECK INSTALLATION

A. Fasten roof-deck panels to steel supporting members by arc spot (puddle) welds of the surface diameter indicated or arc seam welds with an equal perimeter that is not less than 1-1/2 inches long, and as follows:

1. Weld Diameter: 5/8 inch, nominal.
2. Weld Spacing: Weld edge and interior ribs of deck units with a minimum of two welds per deck unit at each support. Space welds 12 inches apart in the field of roof and 6 inches apart in roof corners and perimeter.
3. Weld Washers: Install weld washers at each weld location.

B. Side-Lap and Perimeter Edge Fastening: Fasten side laps and perimeter edges of panels between supports, at intervals not exceeding the lesser of 1/2 of the span or 18 inches, and as follows:

1. Mechanically fasten with self-drilling, No. 10 diameter or larger, carbon-steel screws.
2. Mechanically clinch or button punch.
3. Fasten with a minimum of 1-1/2-inch long welds.

C. End Bearing: Install deck ends over supporting frame with a minimum end bearing of 1-1/2 inches, with end joints as follows:

1. End Joints: Lapped 2 inches minimum.

D. Flexible Closure Strips: Install flexible closure strips over partitions, walls, and where indicated. Install with adhesive according to manufacturer's written instructions to ensure complete closure.

## 3.4 FIELD QUALITY CONTROL

A. Testing Agency: Owner shall engage a qualified independent testing and inspecting agency to perform field tests and inspections and prepare test reports.

B. Field welds will be subject to inspection.

C. Testing agency will report inspection results promptly and in writing to Contractor and Architect.

D. Remove and replace work that does not comply with specified requirements.

E. Additional inspecting, at Contractor's expense, will be performed to determine compliance of corrected work with specified requirements.

## 3.5 REPAIRS AND PROTECTION

A. Galvanizing Repairs: Prepare and repair damaged galvanized coatings on both surfaces of deck with galvanized repair paint according to ASTM A 780 and manufacturer's written instructions.

B. Provide final protection and maintain conditions to ensure that steel deck is without damage or deterioration at time of Final Completion.

END OF SECTION 053100

# SECTION 107315 - PRE-ENGINEERED ALUMINUM LIGHT SHELF

## PART 1 - GENERAL

### 1.1 RELATED DOCUMENTS

A. Drawings and general provisions of the Contract, including General and Supplementary Conditions and Division 01 Specification Sections, apply to this Section.

### 1.2 SECTION INCLUDES

A. Pre-Engineered Aluminum Light Shelf custom fabricated as depicted on Drawings.

B. The Drawings are not to be used for construction, but rather to assist in the preparation of the bid proposal and shop drawings.

### 1.3 RELATED SECTIONS

A. Unit Masonry Assemblies: Clips to be embedded into masonry mortar joints.

B. Structural Steel: Attachment to structural frame of the building.

C. Joint Sealers: Water tight sealants applicable to Work of this Section.

### 1.4 PERFORMANCE REQUIREMENTS

A. Comply with the following for exterior light shelf:
   1. Structural loading requirements:
      a. Downward: 20 lbs/SF.
      b. Upward: 20 lbs/SF.
      c. Horizontal Wind Load: 20 lbs/SF.
      d. Vertical point load at mid span: 250#.
   2. Weathering:
      a. Weathering of the complete panel assembly shall have been tested in accordance with ASTM D2247. The panel shall show no evidence of delamination of the facing and core when subjected to 100% humidity at 100 deg - F for 1000 hours.
   3. Fire Testing:
      a. The complete panel assembly shall have been successfully tested in accordance with ASTM E84 and certified to comply with the following characteristics:
         1) Flame Spread Index: 5 or less.
         2) Smoke Developed Index: 5 or less.
   4. Dimensional and Flatness Criteria:
      a. The panel component of the assembly shall have a flatness criteria not to exceed 1/16” in 18” in any direction. Using a straight edge, no points shall be more than 1/16” away from the straight edge between any two points of contact.
      b. Normal dimensional tolerances of the blade assembly shall be as follows:

1) Length: ±1/16”
2) Width: ±1/16”
3) Diagonal: ±1/8”
4) Radius: ±1/4”

5. Performance Testing - Adhesive:
   a. The adhesive shall have been tested in accordance with ASTM E84.
   b. The adhesive shall be tested at a temperature of 225 deg-F to determine that the shear values are not affected at this service temperature.

## 1.5 SUBMITTALS

A. Product Data: Provide manufacturer’s technical data, guide specification, and installation instructions for aluminum light shelf and supports.

B. Shop Drawings: Indicate fabrication and installation of light shelf. Include plans, elevations, and large-scale details. Show anchorages and accessory items. Provide location template drawings for items supported or anchored to permanent construction.

C. Samples: Submit two samples of light shelf, full depth x 36 inch in size, illustrating material, finish, and construction of light shelf.

D. Samples: Submit two Manufacturer’s color charts showing colors and finishes of exposed materials and accessories available.

E. Design Data: Provide a letter of Design Certification, signed and sealed by a qualified professional engineer licensed in the State of Ohio. Include the following Design Criteria:
   1. Design Loads: Include dead load, live load, deflection, wind loads/speeds, and exposure.

F. Warranty: Submit manufacturer warranty and ensure that forms have been completed in Owner’s name and registered with manufacturer.

## 1.6 QUALITY ASSURANCE

A. Manufacturer: Shall engineer system to withstand design loads indicated.

B. Manufacturer Qualifications: A firm experienced in producing aluminum fabrication similar to that indicated for this project, with a record of successful in-service performance as well as sufficient production capacity to produce required units.

C. Code Approvals:
   1. The panel component of the assembly shall have ICBO and OBC approvals. Approvals of individual components DOES NOT constitute compliance with this requirement.

D. Manufacturing and Fabrication:
   1. The Manufacturer shall have an existing Quality Assurance/Quality Control program which must include quarterly unannounced inspections by an independent Quality Control Agency. Inspections shall be performed in accordance with an approved inspection program.

2. The program records and manufacturing facilities shall be open for auditing and inspection during the course of the project.

E. Installation
1. The installer shall be the manufacturer or an experienced erection firm licensed by or acceptable to the light shelf manufacturer.
2. Written approval of any subcontract erector or verification that the work shall be installed by the manufacturer must be received by the Architect prior to the installation of any materials.

F. Design light shelves under direct supervision of a Professional Structural Engineer experienced in design of this Work and licensed in the State of Ohio.

## 1.7 DELIVERY, STORAGE, AND PROTECTION

A. Store aluminum fabrications inside a well-ventilated area, away from uncured concrete and masonry, and protected from weather, moisture, soiling, abrasion, extreme temperature, and humidity.

## 1.8 PROJECT CONDITIONS

A. Field Measurements: Verify dimensions of windows by field measurements before fabrication and indicate measurements on Shop Drawings. Coordinate fabrication schedule with construction progress to avoid delaying the Work.

## 1.9 WARRANTY

A. Correct defective Work within a five year period after date of Final Completion.

# PART 2 - PRODUCTS

## 2.1 APPROVED FABRICATORS

A. Products
1. Beechwood E.S. and Etna E.S.
   a. Doralco
2. Kae Avenue E.S.
   a. Element

## 2.2 MATERIALS - ALUMINUM

A. Extruded Aluminum: ASTM B 221 (ASTM B 221M), 6063 alloy, T6 temper.

B. Sheet Aluminum: ASTM B 209 (ASTM B 209M), 5052 alloy, H32 or H22 temper.

C. Aluminum-Alloy Drawn Seamless Tubes: ASTM B 210 (ASTM B 210M), 6063 alloy, T6 temper.

D. Aluminum-Alloy Bars: ASTM B 211 (ASTM B 211M), 6061 alloy, T6 temper.

E. Aluminum-Alloy Sand Castings: ASTM B 26.

F. Aluminum-Alloy Die Castings: ASTM B 85.

G. Bolts, Nuts, and Washers: Stainless steel.

H. Welding Materials: AWS D1.1; type required for materials being welded.

## 2.3 COMPONENTS

A. Frame: See Drawings for location and details for light shelf frame assembly construction and locations. Fabricate to match custom assemblies at each building.
   1. Frame assembly shall be shop fabricated from aluminum extrusions as described below.

B. Aluminum Extrusions:
   1. Aluminum extruded continuous square edge pieces and retainers shall be used to finish light shelf edges, produced to the same depth and finish to match the panel skins or as detailed. The edge assembly shall be designed in conjunction with the light shelf panels and shall be shop assembled and finished for a complete assembly delivered to the site.
   2. Extruded support retainers shall be designed in conjunction with and finished to match the light shelf panels to provide adequate support and means of positive attachment to the building structure as a complete assembly.
   3. The extrusion wall thickness, as a component of the light shelf system shall be designed in compliance with the loading and deflection requirements specified herein.
   4. All extrusions shall be fabricated as detailed and if exposed, finished to match the exterior skin.
   5. All extrusions will be formed in lengths equal to the entire length or width of the associated component, unless otherwise noted. All inside and outside corner intersections exposed to view are to be shop mitered.
   6. The alloy of the extrusions should be determined by its intended use. Such factors as corrosion resistance, machinability, formability, strength, and weldability shall be considered. The alloy should be listed on the product standard die drawing.

## 2.4 ACCESSORIES

A. Fasteners: Fasteners shall be compatible with structural substrate.
   1. All hardware shall be positively attached to the structure through the use of concealed fasteners contained within the assembly.
   2. Exposed fasteners shall be kept at a minimum and shall be countersunk stainless screws finished to match the light shelf system, unless otherwise noted. Exposed fasteners shall be clearly identified on Shop Drawings for review by the Architect.
   3. Fastener types and sizes shall be designed to resist negative and positive wind loads.

B. Adhesive: Thermo-setting type adhesive.

1. Type recommended by Manufacturer.
2. Contact type adhesives are not permitted.

## 2.5 SHOP FINISHING

A. Exterior Aluminum Surfaces: superior performance organic coating.
   1. Superior Performance Organic Coating System: AAMA 2605 multiple coat, thermally cured polyvinylidene fluoride system; color as selected from manufacturer's standard colors.

B. Finish for adhered surfaces: For portions of surfaces to receive adhesives on site, finish with primer compatible with recommended adhesives.

C. Surface protection: All exposed surfaces are to be protected by a strippable coating compatible with the anodized finish.

## 2.6 SOURCE QUALITY CONTROL

A. Interior Aluminum Surfaces: Epoxy bonded anodized aluminum (powder coat).
   1. Thermosetting powder coating bonded to anodized aluminum with the following characteristics:
   2. Specific Gravity: 1.26.
   3. Gloss @60: visually matte by standards of ASTM D523.
   4. Film Thickness: 3.0-4.0 mils measured by ASTM D1186.
   5. Depth of Field: Smooth.
   6. Pencil Hardness: 2H-3H by ASTM D3363.
   7. Impact Resistance: 160 inch/lbs. direct and reverse as measured by ASTM D2794.
   8. Adhesion: 5B as tested by D3359.
   9. Flexibility: Pass 1/8" bend. No cracking or loss of adhesion (ASTM D522).
   10. Salt Spray: Pass 1000 hours salt spray, less than 1/8" creepage, no blistering (ASTM B117).

B. Fabrication Tolerances:
   1. Length: ± 1/16 inch.
   2. Width: ±1/16 inch.
   3. Diagonal: ±1/8 inch.
   4. Radius: ±1/16 inch.

# PART 3 - EXECUTION

## 3.1 EXAMINATION

A. Furnish fasteners to be placed in structural frame construction for Work of appropriate Sections.

B. Verify that surrounding area is ready for the light shelf installation.

C. Verify that dimensions and elevations match Drawings and Shop Drawings.

D. Examine structure and surfaces for defects that would prevent proper installation of the light shelf system. Report any discrepancies to the Architect and Contractor. Do not proceed until the defects have been corrected.

## 3.2 PREPARATION

A. All masonry work to be performed must be complete before installation of light shelves may proceed.

## 3.3 INSTALLATION

A. Installation shall be in strict accordance with fabricator's Shop Drawings. Particular attention shall be given to protecting the finish during handling and erection.

B. Comply with the light shelf fabricator's instruction for assembly, installation and erection of light shelf system. Install in accordance with approved Shop Drawings.

C. Anchor component parts securely in place, providing for necessary thermal and structural movement.

## 3.4 ERECTION TOLERANCES

A. Maximum Variation from True Position: ±1/8" over the length of the light shelf.

B. Maximum Offset from True Alignment: ±1/8".

## 3.5 CLEANING

A. The strippable coating shall be removed by the erector immediately upon installation of the light shelf.

B. Clean all surfaces of the light shelf immediately after removal of the strippable coating.

C. Protect installed light shelves from subsequent construction operations.

D. Replace any and all defective or damaged light shelves immediately after discovery of defect or damage.

END OF SECTION 107315

# SECTION 061053 - MISCELLANEOUS ROUGH CARPENTRY

## PART 1 - GENERAL

### 1.1 RELATED DOCUMENTS

A. Drawings and general provisions of the Contract, including General and Supplementary Conditions and Division 01 Specification Sections, apply to this Section.

### 1.2 SUMMARY

A. Section Includes:

1. Framing with dimension lumber.
2. Equipment bases and support curbs.
3. Wood blocking, cants, and nailers.
4. Wood furring and grounds.

B. Related Requirements:

1. Division 06 Section "Sheathing."

### 1.3 DEFINITIONS

A. Dimension Lumber: Lumber of 2 inches nominal or greater but less than 5 inches nominal in least dimension.

B. Lumber grading agencies, and the abbreviations used to reference them, include the following:

1. NeLMA: Northeastern Lumber Manufacturers' Association.
2. NHLA: National Hardwood Lumber Association.
3. NLGA: National Lumber Grades Authority.
4. SPIB: The Southern Pine Inspection Bureau.
5. WCLIB: West Coast Lumber Inspection Bureau.
6. WWPA: Western Wood Products Association.

### 1.4 ACTION SUBMITTALS

A. Product Data: For each type of process and factory-fabricated product. Indicate component materials and dimensions and include construction and application details.

1. Include data for wood-preservative treatment from chemical treatment manufacturer and certification by treating plant that treated materials comply with requirements. Indicate type of preservative used and net amount of preservative retained.
2. Include data for fire-retardant treatment from chemical treatment manufacturer and certification by treating plant that treated materials comply with requirements. Include

physical properties of treated materials based on testing by a qualified independent testing agency.

3. For fire-retardant treatments, include physical properties of treated lumber both before and after exposure to elevated temperatures, based on testing by a qualified independent testing agency according to ASTM D 5664.
4. For products receiving a waterborne treatment, include statement that moisture content of treated materials was reduced to levels specified before shipment to Project site.
5. Include copies of warranties from chemical treatment manufacturers for each type of treatment.

1.5 INFORMATIONAL SUBMITTALS

A. Evaluation Reports: For the following, from ICC-ES:

1. Fire-retardant-treated wood.
2. Power-driven fasteners.
3. Powder-actuated fasteners.
4. Expansion anchors.
5. Metal framing anchors.

1.6 QUALITY ASSURANCE

A. Testing Agency Qualifications: For testing agency providing classification marking for fire-retardant treated material, an inspection agency acceptable to authorities having jurisdiction that periodically performs inspections to verify that the material bearing the classification marking is representative of the material tested.

1.7 DELIVERY, STORAGE, AND HANDLING

A. Stack lumber flat with spacers beneath and between each bundle to provide air circulation. Protect lumber from weather by covering with waterproof sheeting, securely anchored. Provide for air circulation around stacks and under coverings.

PART 2 - PRODUCTS

2.1 WOOD PRODUCTS, GENERAL

A. Certified Wood: shall be produced from wood obtained from forests certified by an FSC-accredited certification body to comply with FSC STD-01-001, "FSC Principles and Criteria for Forest Stewardship."

B. Lumber: DOC PS 20 and applicable rules of grading agencies indicated. If no grading agency is indicated, provide lumber that complies with the applicable rules of any rules-writing agency certified by the ALSC Board of Review. Provide lumber graded by an agency certified by the ALSC Board of Review to inspect and grade lumber under the rules indicated.

1. Factory mark each piece of lumber with grade stamp of grading agency.

2. For exposed lumber indicated to receive a stained or natural finish.
3. Where nominal sizes are indicated, provide actual sizes required by DOC PS 20 for moisture content specified. Where actual sizes are indicated, they are minimum dressed sizes for dry lumber.
4. Provide dressed lumber, S4S, unless otherwise indicated.

C. Maximum Moisture Content of Lumber: 15 percent for 2-inch nominal thickness or less, 19 percent for more than 2-inch nominal thickness unless otherwise indicated.

## 2.2 FIRE-RETARDANT-TREATED MATERIALS

A. General: Use materials complying with requirements in this article, that are acceptable to authorities having jurisdiction, and with fire-test-response characteristics specified as determined by testing identical products per test method indicated by a qualified testing agency.

1. Application: Treat all miscellaneous carpentry unless otherwise indicated.

a. Framing for raised platforms.
b. Concealed blocking.
c. Roof framing and blocking.
d. Wood cants, nailers, curbs, equipment support bases, blocking, and similar members in connection with roofing.
e. Plywood backing panels.

B. Fire-Retardant-Treated Lumber and Plywood by Pressure Process: Products with a flame spread index of 25 or less when tested according to ASTM E 84, and with no evidence of significant progressive combustion when the test is extended an additional 20 minutes, and with the flame front not extending more than 10.5 feet beyond the centerline of the burners at any time during the test.

1. Use treatment that does not promote corrosion of metal fasteners.
2. Exterior Type: Treated materials shall comply with requirements specified above for fire-retardant-treated lumber and plywood by pressure process after being subjected to accelerated weathering according to ASTM D 2898. Use for exterior locations and where indicated.
3. Interior Type A: Treated materials shall have a moisture content of 28 percent or less when tested according to ASTM D 3201 at 92 percent relative humidity. Use where exterior type is not indicated.
4. Design Value Adjustment Factors: Treated lumber shall be tested according ASTM D 5664, and design value adjustment factors shall be calculated according to ASTM D 6841.

C. Kiln-dry lumber after treatment to a maximum moisture content of 19 percent.

D. Identify fire-retardant-treated wood with appropriate classification marking of testing and inspecting agency acceptable to authorities having jurisdiction.

1. For exposed lumber indicated to receive a stained or natural finish.

E. For exposed items indicated to receive a stained or natural finish, use chemical formulations that do not bleed through, contain colorants, or otherwise adversely affect finishes.

## 2.3 DIMENSION LUMBER FRAMING

A. Other Framing: No. 2 grade and the following species:

1. Hem-fir (north); NLGA.
2. Southern pine; SPIB.
3. Douglas fir-larch; WCLIB or WWPA.
4. Mixed southern pine; SPIB.
5. Spruce-pine-fir; NLGA.
6. Douglas fir-south; WWPA.
7. Hem-fir; WCLIB or WWPA.
8. Douglas fir-larch (north); NLGA.
9. Spruce-pine-fir (south); NeLMA, WCLIB, or WWPA.

## 2.4 MISCELLANEOUS LUMBER

A. General: Provide miscellaneous lumber indicated and lumber for support or attachment of other construction, including the following:

1. Blocking.
2. Nailers.

B. For items of dimension lumber size, provide Construction or No. 2 grade lumber.

1. Hem-fir (north); NLGA.
2. Mixed southern pine; SPIB.
3. Spruce-pine-fir; NLGA.
4. Hem-fir; WCLIB or WWPA.
5. Spruce-pine-fir (south); NeLMA, WCLIB, or WWPA.
6. Western woods; WCLIB or WWPA.
7. Northern species; NLGA.
8. Eastern softwoods; NeLMA.

C. For concealed boards, provide lumber with 19 percent maximum moisture content and the following species and grades:

1. Mixed southern pine, No. 2 grade; SPIB.
2. Hem-fir or hem-fir (north), Construction or No. 2 Common grade; NLGA, WCLIB, or WWPA.
3. Spruce-pine-fir (south) or spruce-pine-fir, Construction or No. 2 Common grade; NeLMA, NLGA, WCLIB, or WWPA.
4. Eastern softwoods, No. 2 Common grade; NELMA.
5. Northern species, No. 2 Common grade; NLGA.

D. For blocking not used for attachment of other construction, Utility, Stud, or No. 3 grade lumber of any species may be used provided that it is cut and selected to eliminate defects that will interfere with its attachment and purpose.

E. For blocking and nailers used for attachment of other construction, select and cut lumber to eliminate knots and other defects that will interfere with attachment of other work.

## 2.5 FASTENERS

A. General: Provide fasteners of size and type indicated that comply with requirements specified in this article for material and manufacture.

1. Where carpentry is exposed to weather, in ground contact, pressure-preservative treated, or in area of high relative humidity, provide fasteners with hot-dip zinc coating complying with ASTM A 153/A 153M.

B. Nails, Brads, and Staples: ASTM F 1667.

C. Power-Driven Fasteners: NES NER-272.

D. Wood Screws: ASME B18.6.1.

E. Screws for Fastening to Metal Framing: ASTM C 1002, length as recommended by screw manufacturer for material being fastened.

F. Lag Bolts: ASME B18.2.1.

G. Bolts: Steel bolts complying with ASTM A 307, Grade A; with ASTM A 563 hex nuts and, where indicated, flat washers.

H. Expansion Anchors: Anchor bolt and sleeve assembly of material indicated below with capability to sustain, without failure, a load equal to 6 times the load imposed when installed in unit masonry assemblies and equal to 4 times the load imposed when installed in concrete as determined by testing per ASTM E 488 conducted by a qualified independent testing and inspecting agency.

1. Material: Carbon-steel components, zinc plated to comply with ASTM B 633, Class Fe/Zn 5.
2. Material: Stainless steel with bolts and nuts complying with ASTM F 593 and ASTM F 594, Alloy Group 1 or 2.

## 2.6 METAL FRAMING ANCHORS

A. Basis-of-Design Product: Subject to compliance with requirements, provide or comparable product by one of the following:

1. Cleveland Steel Specialty Co.
2. KC Metals Products, Inc.
3. Phoenix Metal Products, Inc.
4. Simpson Strong-Tie Co., Inc.

B. Galvanized-Steel Sheet: Hot-dip, zinc-coated steel sheet complying with ASTM A 653/A 653M, G60 coating designation.

1. Use for interior locations unless otherwise indicated.

C. Hot-Dip Heavy-Galvanized Steel Sheet: ASTM A 653/A 653M; Structural Steel (SS), high-strength low-alloy steel Type A (HSLAS Type A), or high-strength low-alloy steel Type B (HSLAS Type B); G185 coating designation; and not less than 0.036 inch thick.

1. Use for wood-preservative-treated lumber and where indicated.

D. Stainless-Steel Sheet: ASTM A 666, Type 304.

1. Use for exterior locations and where indicated.

## 2.7 MISCELLANEOUS MATERIALS

A. Adhesives for Gluing to Concrete or Masonry: Formulation complying with ASTM D 3498 that is approved for use indicated by adhesive manufacturer.

1. Adhesives shall have a VOC content or less when calculated according to 40 CFR 59, Subpart D (EPA Method 24).
2. Adhesives shall comply with the testing and product requirements of the California Department of Health Services' "Standard Practice for the Testing of Volatile Organic Emissions from Various Sources Using Small-Scale Environmental Chambers."

# PART 3 - EXECUTION

## 3.1 INSTALLATION, GENERAL

A. Set carpentry to required levels and lines, with members plumb, true to line, cut, and fitted. Fit carpentry to other construction; scribe and cope as needed for accurate fit. Locate nailers, blocking, grounds, and similar supports to comply with requirements for attaching other construction.

B. Framing Standard: Comply with AF&PA's WCD 1, "Details for Conventional Wood Frame Construction," unless otherwise indicated.

C. Metal Framing Anchors: Install metal framing anchors to comply with manufacturer's written instructions. Install fasteners through each fastener hole.

D. Do not splice structural members between supports unless otherwise indicated.

E. Provide fire blocking in furred spaces, stud spaces, and other concealed cavities.

F. Sort and select lumber so that natural characteristics will not interfere with installation or with fastening other materials to lumber. Do not use materials with defects that interfere with function of member or pieces that are too small to use with minimum number of joints or optimum joint arrangement.

G. Comply with AWPA M4 for applying field treatment to cut surfaces of preservative-treated lumber.

1. Use inorganic boron for items that are continuously protected from liquid water.
2. Use copper naphthenate for items not continuously protected from liquid water.

H. Securely attach carpentry work to substrate by anchoring and fastening as indicated, complying with the following:

1. NES NER-272 for power-driven fasteners.
2. Table 2304.9.1, "Fastening Schedule," in ICC's International Building Code.
3. Table R602.3(1), "Fastener Schedule for Structural Members," and Table R602.3(2), "Alternate Attachments," in ICC's International Residential Code for One- and Two-Family Dwellings.

I. Use steel common nails unless otherwise indicated. Select fasteners of size that will not fully penetrate members where opposite side will be exposed to view or will receive finish materials. Make tight connections between members. Install fasteners without splitting wood. Drive nails snug but do not countersink nail heads unless otherwise indicated.

## 3.2 WOOD BLOCKING AND NAILER INSTALLATION

A. Install where indicated and where required for attaching other work. Form to shapes indicated and cut as required for true line and level of attached work. Coordinate locations with other work involved.

B. Attach items to substrates to support applied loading. Recess bolts and nuts flush with surfaces unless otherwise indicated.

## 3.3 PROTECTION

A. Protect wood that has been treated with inorganic boron (SBX) from weather. If, despite protection, inorganic boron-treated wood becomes wet, apply EPA-registered borate treatment. Apply borate solution by spraying to comply with EPA-registered label.

B. Protect miscellaneous rough carpentry from weather. If, despite protection, miscellaneous rough carpentry becomes wet, apply EPA-registered borate treatment. Apply borate solution by spraying to comply with EPA-registered label.

END OF SECTION 061053

# SECTION 061600 - SHEATHING

## PART 1 - GENERAL

### 1.1 RELATED DOCUMENTS

A. Drawings and general provisions of the Contract, including General and Supplementary Conditions and Division 01 Specification Sections, apply to this Section.

### 1.2 SUMMARY

A. Section Includes:

1. Wall sheathing.

### 1.3 ACTION SUBMITTALS

A. Product Data: For each type of process and factory-fabricated product. Indicate component materials and dimensions and include construction and application details.

1. Include data for fire-retardant treatment from chemical treatment manufacturer and certification by treating plant that treated plywood complies with requirements. Include physical properties of treated materials.
2. For fire-retardant treatments, include physical properties of treated plywood both before and after exposure to elevated temperatures, based on testing by a qualified independent testing agency according to ASTM D 5516.
3. Include copies of warranties from chemical treatment manufacturers for each type of treatment.

### 1.4 INFORMATIONAL SUBMITTALS

A. Evaluation Reports: For following products, from ICC-ES:

1. Fire-retardant-treated plywood.

### 1.5 QUALITY ASSURANCE

A. Testing Agency Qualifications: For testing agency providing classification marking for fire-retardant-treated material, an inspection agency acceptable to authorities having jurisdiction that periodically performs inspections to verify that the material bearing the classification marking is representative of the material tested.

## 1.6 DELIVERY, STORAGE, AND HANDLING

A. Stack panels flat with spacers beneath and between each bundle to provide air circulation. Protect sheathing from weather by covering with waterproof sheeting, securely anchored. Provide for air circulation around stacks and under coverings.

# PART 2 - PRODUCTS

## 2.1 PERFORMANCE REQUIREMENTS

A. Fire-Test-Response Characteristics: For assemblies with fire-resistance ratings, provide materials and construction identical to those of assemblies tested for fire resistance per ASTM E 119 by a testing and inspecting agency acceptable to authorities having jurisdiction.

1. Fire-Resistance Ratings: Indicated by design designations from UL's "Fire Resistance Directory.".

## 2.2 WOOD PANEL PRODUCTS

A. Emissions: Products shall meet the testing and product requirements of the California Department of Health Services' "Standard Practice for the Testing of Volatile Organic Emissions from Various Sources Using Small-Scale Environmental Chambers."

B. Certified Wood: For the following wood products, provide materials produced from wood obtained from forests certified by an FSC-accredited certification body to comply with FSC STD-01-001, "FSC Principles and Criteria for Forest Stewardship."

1. Plywood.

C. Plywood: DOC PS 1.

D. Thickness: As needed to comply with requirements specified, but not less than thickness indicated.

E. Factory mark panels to indicate compliance with applicable standard.

## 2.3 FIRE-RETARDANT-TREATED PLYWOOD

A. General: Use materials complying with requirements in this article that are acceptable to authorities having jurisdiction and with fire-test-response characteristics specified as determined by testing identical products per test method indicated by a qualified testing agency.

1. Application: Treat all plywood unless otherwise indicated.

B. Fire-Retardant-Treated Plywood by Pressure Process: Products with a flame-spread index of 25 or less when tested according to ASTM E 84, and with no evidence of significant progressive combustion when the test is extended an additional 20 minutes, and with the flame front not extending more than 10.5 feet beyond the centerline of the burners at any time during the test.

1. Use treatment that does not promote corrosion of metal fasteners.
2. Exterior Type: Treated materials shall comply with requirements specified above for fire-retardant-treated plywood by pressure process after being subjected to accelerated weathering according to ASTM D 2898. Use for exterior locations and where indicated.
3. Interior Type A: Treated materials shall have a moisture content of 28 percent or less when tested according to ASTM D 3201 at 92 percent relative humidity. Use where exterior type is not indicated.
4. Design Value Adjustment Factors: Treated lumber plywood shall be tested according ASTM D 5516 and design value adjustment factors shall be calculated according to ASTM D 6305. Span ratings after treatment shall be not less than span ratings specified.

C. Kiln-dry material after treatment to a maximum moisture content of 15 percent. Do not use material that is warped or does not comply with requirements for untreated material.

D. Identify fire-retardant-treated plywood with appropriate classification marking of qualified testing agency.

## 2.4 WALL SHEATHING

A. Fire Retardant Wall Sheathing: Exposure 1, Structural I sheathing.

1. Span Rating: Not less than 16/0.
2. Nominal Thickness: Not less than 1/2 inch.

## 2.5 FASTENERS

A. General: Provide fasteners of size and type indicated that comply with requirements specified in this article for material and manufacture.

1. For sheathing, provide fasteners with hot-dip zinc coating complying with ASTM A 153/A 153M.

B. Nails, Brads, and Staples: ASTM F 1667.

C. Power-Driven Fasteners: NES NER-272.

D. Wood Screws: ASME B18.6.1.

# PART 3 - EXECUTION

## 3.1 INSTALLATION, GENERAL

A. Do not use materials with defects that impair quality of sheathing or pieces that are too small to use with minimum number of joints or optimum joint arrangement. Arrange joints so that pieces do not span between fewer than three support members.

B. Cut panels at penetrations, edges, and other obstructions of work; fit tightly against abutting construction unless otherwise indicated.

C. Securely attach to substrate by fastening as indicated, complying with the following:

1. NES NER-272 for power-driven fasteners.
2. Table 2304.9.1, "Fastening Schedule," in ICC's "International Building Code."
3. Table R602.3(1), "Fastener Schedule for Structural Members," and Table R602.3(2), "Alternate Attachments," in ICC's "International Residential Code for One- and Two-Family Dwellings."

D. Use common wire nails unless otherwise indicated. Select fasteners of size that will not fully penetrate members where opposite side will be exposed to view or will receive finish materials. Make tight connections. Install fasteners without splitting wood.

E. Coordinate sheathing installation with flashing and joint-sealant installation so these materials are installed in sequence and manner that prevent exterior moisture from passing through completed assembly.

F. Do not bridge building expansion joints; cut and space edges of panels to match spacing of structural support elements.

G. Coordinate sheathing installation with installation of materials installed over sheathing so sheathing is not exposed to precipitation or left exposed at end of the workday when rain is forecast.

END OF SECTION 061600

# SECTION 071900 - WATER REPELLENTS

## PART 1 - GENERAL

### 1.1 RELATED DOCUMENTS

A. Drawings and general provisions of the Contract, including General and Supplementary Conditions and Division 01 Specification Sections, apply to this Section.

### 1.2 SUMMARY

A. Section includes film-forming water-repellent treatments for the following vertical and horizontal surfaces:

1. Clay brick masonry.

### 1.3 INFORMATIONAL SUBMITTALS

A. Warranty: Special warranty specified in this Section.

### 1.4 QUALITY ASSURANCE

A. Mockups: Apply water repellent to each type of substrate required.

1. Locate each test application as directed by Architect.
2. Size: 10 sq. ft.
3. Retain subparagraph below if applicable. Retain option for pigmented repellent if required.
4. Final approval by Architect of water-repellent application will be from test applications.

B. Preinstallation Conference: Conduct conference at Project site.

### 1.5 PROJECT CONDITIONS

A. Limitations: Proceed with application only when the following existing and forecasted weather and substrate conditions permit water repellents to be applied according to manufacturers' written instructions and warranty requirements:

1. Building has been closed in for not less than 30 days before treating wall assemblies.
2. Ambient temperature is above 40 deg F and below 100 deg F and will remain so for 24 hours.
3. Substrate is not frozen and substrate-surface temperature is above 40 deg F and below 100 deg F.
4. Rain or snow is not predicted within 24 hours.
5. Not less than 24 hours have passed since surfaces were last wet.

6. Windy conditions do not exist that might cause water repellent to be blown onto vegetation or surfaces not intended to be treated.

1.6 WARRANTY

A. Special Warranty: Manufacturer's standard form in which manufacturer agrees to repair or replace materials that fail to maintain water repellency specified in "Performance Requirements" Article within specified warranty period.

1. Warranty Period: Five years from date of Final Completion.

PART 2 - PRODUCTS

2.1 FILM-FORMING WATER REPELLENTS

A. Silicone-Resin Sealer, Film-Forming Water Repellent: Clear, polymerized, silicone-resin water repellent for dense substrates; with a solvent- or waterborne solution containing not less than 3 and up to 5 percent solids by weight; and with 400 g/L or less of VOCs.

1. Products: Subject to compliance with requirements, provide the following:

a. ProSoCo, Inc; Blok-Guard & Graffiti Control II.

PART 3 - EXECUTION

3.1 EXAMINATION

A. Examine substrates, areas, and conditions, with Applicator present, for compliance with requirements and conditions affecting performance of the Work.

1. Verify that surfaces are clean and dry according to water-repellent manufacturer's requirements. Check moisture content in three representative locations by method recommended by manufacturer.
2. Inspect for previously applied treatments that may inhibit penetration or performance of water repellents.
3. Verify that there is no efflorescence or other removable residues that would be trapped beneath the application of water repellent.
4. Verify that required repairs are complete, cured, and dry before applying water repellent.

B. Proceed with installation only after unsatisfactory conditions have been corrected.

3.2 PREPARATION

A. Cleaning: Before application of water repellent, clean substrate of substances that could impair penetration or performance of product according to water-repellent manufacturer's written instructions and as follows:

1. Clay Brick Masonry: ASTM D 5703.

B. Protect adjoining work, including mortar and sealant bond surfaces, from spillage or blow-over of water repellent. Cover adjoining and nearby surfaces of aluminum and glass if there is the possibility of water repellent being deposited on surfaces. Cover live vegetation.

C. Coordination with Sealant Joints: Do not apply water repellent until sealants for joints adjacent to surfaces receiving water-repellent treatment have been installed and cured.

1. Water-repellent work may precede sealant application only if sealant adhesion and compatibility have been tested and verified using substrate, water repellent, and sealant materials identical to those required.

## 3.3 APPLICATION

A. Manufacturer's Field Service: Engage a factory-authorized service representative to inspect the substrate before application of water repellent and to instruct Applicator on the product and application method to be used.

B. Apply a heavy-saturation coating of water repellent, on surfaces indicated for treatment, to the point of saturation. Apply coating in dual passes of uniform, overlapping strokes. Remove excess material; do not allow material to puddle beyond saturation. Comply with manufacturer's written instructions for application procedure unless otherwise indicated.

C. Apply a second saturation coating, repeating first application. Comply with manufacturer's written instructions for limitations on drying time between coats and after rainstorm wetting of surfaces between coats. Consult manufacturer's technical representative if written instructions are not applicable to Project conditions.

## 3.4 CLEANING

A. Immediately clean water repellent from adjoining surfaces and surfaces soiled or damaged by water-repellent application as work progresses. Correct damage to work of other trades caused by water-repellent application, as approved by Architect.

B. Comply with manufacturer's written cleaning instructions.

END OF SECTION 071900

# SECTION 072100 - THERMAL INSULATION

## PART 1 - GENERAL

### 1.1 RELATED DOCUMENTS

A. Drawings and general provisions of the Contract, including General and Supplementary Conditions and Division 01 Specification Sections, apply to this Section.

### 1.2 SUMMARY

A. Section Includes:

1. Foam-plastic board insulation.
2. Glass-fiber blanket insulation.
3. Spray polyurethane foam insulation.

B. Related Sections:

1. Division 07 Section(s) "Thermoplastic Polyolefin (TPO) Roofing" for insulation specified as part of roofing construction.

### 1.3 ACTION SUBMITTALS

A. Product Data: For each type of product indicated.

### 1.4 INFORMATIONAL SUBMITTALS

A. Product Test Reports: Based on evaluation of comprehensive tests performed by a qualified testing agency, for each product.

B. Research/Evaluation Reports: For foam-plastic insulation, from ICC-ES.

### 1.5 QUALITY ASSURANCE

A. Surface-Burning Characteristics: As determined by testing identical products according to ASTM E 84 by a qualified testing agency. Identify products with appropriate markings of applicable testing agency.

### 1.6 DELIVERY, STORAGE, AND HANDLING

A. Protect insulation materials from physical damage and from deterioration due to moisture, soiling, and other sources. Store inside and in a dry location. Comply with manufacturer's written instructions for handling, storing, and protecting during installation.

B. Protect foam-plastic board insulation as follows:

1. Do not expose to sunlight except to necessary extent for period of installation and concealment.
2. Protect against ignition at all times. Do not deliver foam-plastic board materials to Project site before installation time.
3. Quickly complete installation and concealment of foam-plastic board insulation in each area of construction.

## PART 2 - PRODUCTS

### 2.1 FOAM BOARD INSULATION

A. Extruded-Polystyrene Board Insulation: ASTM C 578, of type and minimum compressive strength indicated below, with maximum flame-spread and smoke-developed indexes of 75 and 450, respectively, per ASTM E 84.

1. Manufacturers: Subject to compliance with requirements, provide products by one of the following:

a. DiversiFoam Products.
b. Dow Chemical Company (The).
c. Owens Corning.
d. Pactiv Building Products.

2. Type IV, 25 psi.

### 2.2 GLASS-FIBER BLANKET INSULATION

A. Manufacturers: Subject to compliance with requirements, provide products by one of the following:

1. CertainTeed Corporation.
2. Johns Manville.
3. Knauf Insulation.
4. Owens Corning.

B. Recycled Content: Postconsumer recycled content plus one-half of preconsumer recycled content not less than 25 percent.

C. Unfaced, Glass-Fiber Blanket Insulation: ASTM C 665, Type I; with maximum flame-spread and smoke-developed indexes of 25 and 50, respectively, per ASTM E 84; passing ASTM E 136 for combustion characteristics. Provide sound attenuation rating where indicated on drawings.

D. Sustainability Requirements: Provide glass-fiber blanket insulation as follows:

1. Free of Formaldehyde: Insulation manufactured with 100 percent acrylic binders and no formaldehyde.

2. Low Emitting: Insulation tested according to ASTM D 5116 and shown to emit less than 0.05-ppm formaldehyde.

## 2.3 SPRAY POLYURETHANE FOAM INSULATION

A. Polyurethane Foam Insulation: ASTM C 1029, Type II, with maximum flame-spread and smoke-developed indexes of 75 and 450, respectively, per ASTM E 84.

1. Manufacturers: Subject to compliance with requirements, provide products by one of the following:

a. BASF Corporation.
b. Bay Systems North America, LLC.
c. Dow Chemical Company.
d. ER Systems, Inc.

2. Minimum density of 1.5 lb/cu. ft., thermal resistivity of 6.2 deg F x h x sq. ft./Btu x in. at 75 deg F.

# PART 3 - EXECUTION

## 3.1 PREPARATION

A. Clean substrates of substances that are harmful to insulation or that interfere with insulation attachment.

## 3.2 INSTALLATION, GENERAL

A. Comply with insulation manufacturer's written instructions applicable to products and applications indicated.

B. Install insulation that is undamaged, dry, and unsoiled and that has not been left exposed to ice, rain, or snow at any time.

C. Extend insulation to envelop entire area to be insulated. Cut and fit tightly around obstructions and fill voids with insulation. Remove projections that interfere with placement.

D. Provide sizes to fit applications indicated and selected from manufacturer's standard thicknesses, widths, and lengths. Apply single layer of insulation units to produce thickness indicated unless multiple layers are otherwise shown or required to make up total thickness.

## 3.3 INSTALLATION OF BELOW-GRADE INSULATION

A. On vertical surfaces, set insulation units according to manufacturer's written instructions.

1. If not otherwise indicated, extend insulation a minimum of 24 inches below exterior grade line.

B. On horizontal surfaces, loosely lay insulation units according to manufacturer's written instructions. Stagger end joints and tightly abut insulation units.

1. If not otherwise indicated, extend insulation a minimum of 24 inches in from exterior walls.

## 3.4 INSTALLATION OF CAVITY-WALL INSULATION

A. Foam-Plastic Board Insulation: Install pads of adhesive spaced approximately 24 inches o.c. both ways on inside face, and as recommended by manufacturer. Fit courses of insulation between wall ties and other obstructions, with edges butted tightly in both directions. Press units firmly against inside substrates.

1. Supplement adhesive attachment of insulation by securing boards with two-piece wall ties designed for this purpose and specified in Division 04 Section "Unit Masonry."

## 3.5 INSTALLATION OF SPRAY-APPLIED INSULATION

A. Apply spray-applied insulation according to manufacturer’s written instructions. Do not apply insulation until installation of pipes, ducts, conduits, wiring, and electrical outlets in walls is completed and windows, electrical boxes, and other items not indicated to receive insulation are masked. After insulation is applied, make flush with face of studs by using method recommended by insulation manufacturer.

B. Miscellaneous Voids: Install insulation in miscellaneous voids and cavity spaces where required to prevent gaps in insulation using the following materials:

1. Spray Polyurethane Insulation: Apply according to manufacturer’s written instructions.

## 3.6 PROTECTION

A. Protect installed insulation from damage due to harmful weather exposures, physical abuse, and other causes. Provide temporary coverings or enclosures where insulation is subject to abuse and cannot be concealed and protected by permanent construction immediately after installation.

END OF SECTION 072100

# SECTION 075423 - THERMOPLASTIC POLYOLEFIN (TPO) ROOFING

## PART 1 - GENERAL

### 1.1 RELATED DOCUMENTS

A. Drawings and general provisions of the Contract, including General and Supplementary Conditions and Division 01 Specification Sections, apply to this Section.

### 1.2 SUMMARY

A. Section Includes:

1. Adhered TPO membrane roofing system.
2. Roof insulation.

B. Related Sections:

1. Division 06 Section "Rough Carpentry" for wood nailers, curbs, and blocking.

### 1.3 DEFINITIONS

A. TPO: Thermoplastic polyolefin.

B. Roofing Terminology: See ASTM D 1079 and glossary in NRCA's "The NRCA Roofing and Waterproofing Manual" for definitions of terms related to roofing work in this Section.

### 1.4 PERFORMANCE REQUIREMENTS

A. General Performance: Installed membrane roofing and base flashings shall withstand specified uplift pressures, thermally induced movement, and exposure to weather without failure due to defective manufacture, fabrication, installation, or other defects in construction. Membrane roofing and base flashings shall remain watertight.

B. Material Compatibility: Provide roofing materials that are compatible with one another under conditions of service and application required, as demonstrated by membrane roofing manufacturer based on testing and field experience.

C. Roofing System Design: Provide membrane roofing system that is identical to systems that have been successfully tested by a qualified testing and inspecting agency to resist uplift pressure calculated according to ASCE/SEI 7.

D. FM Approvals Listing: Provide membrane roofing, base flashings, and component materials that comply with requirements in FM Approvals 4450 and FM Approvals 4470 as part of a membrane roofing system, and that are listed in FM Approvals' "RoofNav" for Class 1 or noncombustible construction, as applicable. Identify materials with FM Approvals markings.

1. Fire/Windstorm Classification: Class 1A-90.
2. Hail Resistance: MH.

E. Energy Performance: Provide roofing system with initial Solar Reflectance Index not less than 78 when calculated according to ASTM E 1980, based on testing identical products by a qualified testing agency.

F. Energy Performance: Provide roofing system that is listed on the DOE's ENERGY STAR "Roof Products Qualified Product List" for slope roof products.

G. Energy Performance: Provide roofing system with initial solar reflectance not less than 0.70 and emissivity not less than 0.75 when tested according to CRRC-1.

## 1.5 SUBMITTALS

A. Product Data: For each type of product indicated.

B. Shop Drawings: For roofing system. Include plans, elevations, sections, details, and attachments to other work.

1. Base flashings and membrane terminations.
2. Tapered insulation, including slopes.
3. Roof plan showing orientation of steel roof deck and orientation of membrane roofing and fastening spacings and patterns for mechanically fastened membrane roofing.
4. Insulation fastening patterns for corner, perimeter, and field-of-roof locations.

C. Samples for Verification: For the following products:

1. Sheet roofing, of color specified, including T-shaped side and end lap seam.
2. Roof insulation.
3. Six insulation fasteners of each type, length, and finish.

D. Qualification Data: For qualified Installer and manufacturer.

E. Manufacturer Certificates: Signed by roofing manufacturer certifying that roofing system complies with requirements specified in "Performance Requirements" Article.

1. Submit evidence of compliance with performance requirements.

F. Product Test Reports: Based on evaluation of comprehensive tests performed by manufacturer and witnessed by a qualified testing agency, for components of membrane roofing system.

G. Field quality-control reports.

H. Maintenance Data: For roofing system to include in maintenance manuals.

I. Warranties: Sample of special warranties.

## 1.6 QUALITY ASSURANCE

A. Manufacturer Qualifications: A qualified manufacturer that is UL listed for membrane roofing system identical to that used for this Project.

B. Installer Qualifications: A qualified firm that is approved, authorized, or licensed by membrane roofing system manufacturer to install manufacturer's product and that is eligible to receive manufacturer's special warranty.

C. Source Limitations: Obtain components from same manufacturer as membrane roofing.

D. Exterior Fire-Test Exposure: ASTM E 108, Class A; for application and roof slopes indicated, as determined by testing identical membrane roofing materials by a qualified testing agency. Materials shall be identified with appropriate markings of applicable testing agency.

E. Fire-Resistance Ratings: Where indicated, provide fire-resistance-rated roof assemblies identical to those of assemblies tested for fire resistance per ASTM E 119 by a qualified testing agency. Identify products with appropriate markings of applicable testing agency.

F. Preinstallation Roofing Conference: Conduct conference at Project site.

1. Meet with Owner, Architect, roofing Installer, roofing system manufacturer's representative, and installers whose work interfaces with or affects roofing, including installers of roof accessories and roof-mounted equipment.
2. Review methods and procedures related to roofing installation, including manufacturer's written instructions.
3. Review and finalize construction schedule and verify availability of materials, Installer's personnel, equipment, and facilities needed to make progress and avoid delays.
4. Examine deck substrate conditions and finishes for compliance with requirements, including flatness and fastening.
5. Review structural loading limitations of roof deck during and after roofing.
6. Review base flashings, special roofing details, roof drainage, roof penetrations, equipment curbs, and condition of other construction that will affect roofing system.
7. Review governing regulations.
8. Review temporary protection requirements for roofing system during and after installation.
9. Review roof observation and repair procedures after roofing installation.

## 1.7 DELIVERY, STORAGE, AND HANDLING

A. Deliver roofing materials to Project site in original containers with seals unbroken and labeled with manufacturer's name, product brand name and type, date of manufacture, approval or listing agency markings, and directions for storing and mixing with other components.

B. Store liquid materials in their original undamaged containers in a clean, dry, protected location and within the temperature range required by roofing system manufacturer. Protect stored liquid material from direct sunlight.

1. Discard and legally dispose of liquid material that cannot be applied within its stated shelf life.

C. Protect roof insulation materials from physical damage and from deterioration by sunlight, moisture, soiling, and other sources. Store in a dry location. Comply with insulation manufacturer's written instructions for handling, storing, and protecting during installation.

D. Handle and store roofing materials and place equipment in a manner to avoid permanent deflection of deck.

1.8 PROJECT CONDITIONS

A. Weather Limitations: Proceed with installation only when existing and forecasted weather conditions permit roofing system to be installed according to manufacturer's written instructions and warranty requirements.

1.9 WARRANTY

A. Special Warranty: Manufacturer's standard or customized form, without monetary limitation, in which manufacturer agrees to repair or replace components of membrane roofing system that fail in materials or workmanship within specified warranty period. Warranty is to include verbiage that states warranty covers damages due to wind gusts up to 90 mph for roofing and 110 mph for the metal copings. There are to be no inspection fees for any manufacturer inspections during the twenty years.

1. Special warranty includes membrane roofing, base flashings, roof insulation, fasteners, roofing accessories, copings, and other components of membrane roofing system.
2. Warranty Period: 20 years from date of Final Completion.

B. Special Project Warranty: Submit roofing Installer's warranty, on warranty form at end of this Section, signed by Installer, covering the Work of this Section, including all components of membrane roofing system such as membrane roofing, base flashing, roof insulation, fasteners, copings, walkway products, etc. for the following warranty period:

1. Warranty Period: Two years from date of Final Completion.

PART 2 - PRODUCTS

2.1 TPO MEMBRANE ROOFING

A. Fabric-Reinforced Thermoplastic Polyolefin Sheet: ASTM D 6878, internally fabric or scrim reinforced, uniform, flexible TPO sheet.

1. Manufacturers: Subject to compliance with requirements, provide products by one of the following:

a. Carlisle SynTec Incorporated.
b. Firestone Building Products Company.
c. Versico Incorporated.

2. Thickness: 60 mils, nominal.

3. Exposed Face Color: White.

## 2.2 AUXILIARY MEMBRANE ROOFING MATERIALS

A. General: Auxiliary membrane roofing materials recommended by roofing system manufacturer for intended use, and compatible with membrane roofing.

1. Liquid-type auxiliary materials shall comply with VOC limits of authorities having jurisdiction.
2. Adhesives and sealants that are not on the exterior side of weather barrier shall comply with the following limits for VOC content when calculated according to 40 CFR 59, Subpart D (EPA Method 24):

   a. Plastic Foam Adhesives: 50 g/L.
   b. Gypsum Board and Panel Adhesives: 50 g/L.
   c. Multipurpose Construction Adhesives: 70 g/L.
   d. Fiberglass Adhesives: 80 g/L.
   e. Contact Adhesive: 80 g/L.
   f. Other Adhesives: 250 g/L.
   g. Single-Ply Roof Membrane Sealants: 450 g/L.
   h. Nonmembrane Roof Sealants: 300 g/L.
   i. Sealant Primers for Nonporous Substrates: 250 g/L.
   j. Sealant Primers for Porous Substrates: 775 g/L.
3. Adhesives and sealants that are not on the exterior side of weather barrier shall comply with the testing and product requirements of the California Department of Health Services' "Standard Practice for the Testing of Volatile Organic Emissions from Various Sources Using Small-Scale Environmental Chambers."

B. Sheet Flashing: Manufacturer's standard unreinforced thermoplastic polyolefin sheet flashing, 55 mils thick, minimum, of same color as sheet membrane.

C. Bonding Adhesive: Manufacturer's standard.

D. Slip Sheet: Manufacturer's standard, of thickness required for application.

E. Metal Termination Bars: Manufacturer's standard, predrilled stainless-steel or aluminum bars, with anchors.

F. Metal Battens: Manufacturer's standard, aluminum-zinc-alloy-coated or zinc-coated steel sheet, prepunched.

G. Fasteners: Factory-coated steel fasteners and metal or plastic plates complying with corrosion-resistance provisions in FM Approvals 4470, designed for fastening membrane to substrate, and acceptable to membrane roofing system manufacturer.

H. Miscellaneous Accessories: Provide pourable sealers, preformed cone and vent sheet flashings, preformed inside and outside corner sheet flashings, T-joint covers, lap sealants, termination reglets, and other accessories.

## 2.3 ROOF INSULATION

A. General: Preformed roof insulation boards manufactured or approved by EPDM roofing manufacturer, selected from manufacturer's standard sizes suitable for application, of thicknesses indicated.

B. Manufacturers: Subject to compliance with requirements, available manufacturers offering products that may be incorporated into the Work include, but are not limited to, the following:

1. Atlas Roofing Corporation.
2. Carlisle SynTec Incorporated.
3. Firestone Building Products.
4. Hunter Panels.
5. Johns Manville.
6. Rmax, Inc.

C. Flat roof insulation; minimum (2) layers staggered rigid, closed cell polyisocyanurate foam core bonded to specially coated inorganic, fiberglass facers, long term thermal resistance (LTTR) of approximately 6.0 per inch, selected for chemical compatibility with specific manufacturer's roofing membrane, compressive strength of 20 psi, insulation must meet ASTM C1289 Type II, Class 2 and ASTM D3273 for mold resistance. Reference drawings for thicknesses.

D. Provide preformed saddles, polyisocyanurate insulation, crickets, tapered edge strips, and other insulation shapes where indicated for sloping to drain. Fabricate to slopes indicated.

# PART 3 - EXECUTION

## 3.1 EXAMINATION

A. Examine substrates, areas, and conditions, with Installer present, for compliance with the following requirements and other conditions affecting performance of roofing system:

1. Verify that roof openings and penetrations are in place and curbs are set and braced and that roof drain bodies are securely clamped in place.
2. Verify that wood blocking, curbs, and nailers are securely anchored to roof deck at penetrations and terminations and that nailers match thicknesses of insulation.

B. Proceed with installation only after unsatisfactory conditions have been corrected.

## 3.2 PREPARATION

A. Clean substrate of dust, debris, moisture, and other substances detrimental to roofing installation according to roofing system manufacturer's written instructions. Remove sharp projections.

B. Prevent materials from entering and clogging roof drains and conductors and from spilling or migrating onto surfaces of other construction. Remove roof-drain plugs when no work is taking place or when rain is forecast.

C. Complete terminations and base flashings and provide temporary seals to prevent water from entering completed sections of roofing system at the end of the workday or when rain is forecast. Remove and discard temporary seals before beginning work on adjoining roofing.

## 3.3 INSULATION INSTALLATION

A. Coordinate installing membrane roofing system components so insulation is not exposed to precipitation or left exposed at the end of the workday.

B. Comply with membrane roofing system and insulation manufacturer's written instructions for installing roof insulation. Screw attach insulation.

C. Install tapered insulation under area of roofing to conform to slopes indicated.

D. Install insulation under area of roofing to achieve required thickness. Where overall insulation thickness is 2.7 inches or greater, install two or more layers with joints of each succeeding layer staggered from joints of previous layer a minimum of 6 inches in each direction.

1. Where installing composite and noncomposite insulation in two or more layers, install noncomposite board insulation for bottom layer and intermediate layers, if applicable, and install composite board insulation for top layer.

E. Trim surface of insulation where necessary at roof drains so completed surface is flush and does not restrict flow of water.

F. Install insulation with long joints of insulation in a continuous straight line with end joints staggered between rows, abutting edges and ends between boards. Fill gaps exceeding 1/4 inch with insulation.

1. Cut and fit insulation within 1/4 inch of nailers, projections, and penetrations.

## 3.4 ADHERED MEMBRANE ROOFING INSTALLATION

A. Adhere membrane roofing over area to receive roofing and install according to membrane roofing system manufacturer's written instructions.

B. Start installation of membrane roofing in presence of membrane roofing system manufacturer's technical personnel.

C. Accurately align membrane roofing and maintain uniform side and end laps of minimum dimensions required by manufacturer. Stagger end laps.

D. Bonding Adhesive: Apply to substrate and underside of membrane roofing at rate required by manufacturer and allow to partially dry before installing membrane roofing. Do not apply to splice area of membrane roofing.

E. In addition to adhering, mechanically fasten membrane roofing securely at terminations, penetrations, and perimeter of roofing.

F. Apply membrane roofing with side laps shingled with slope of roof deck where possible.

G. Seams: Clean seam areas, overlap membrane roofing, and hot-air weld side and end laps of membrane roofing and sheet flashings according to manufacturer's written instructions to ensure a watertight seam installation.

1. Test lap edges with probe to verify seam weld continuity. Apply lap sealant to seal cut edges of sheet membrane.
2. Verify field strength of seams a minimum of twice daily and repair seam sample areas.
3. Repair tears, voids, and lapped seams in roofing that does not comply with requirements.

H. Spread sealant bed over deck drain flange at roof drains and securely seal membrane roofing in place with clamping ring.

## 3.5 BASE FLASHING INSTALLATION

A. Install sheet flashings and preformed flashing accessories and adhere to substrates according to membrane roofing system manufacturer's written instructions.

B. Apply bonding adhesive to substrate and underside of sheet flashing at required rate and allow to partially dry. Do not apply to seam area of flashing.

C. Flash penetrations and field-formed inside and outside corners with cured or uncured sheet flashing.

D. Clean seam areas, overlap, and firmly roll sheet flashings into the adhesive. Hot-air weld side and end laps to ensure a watertight seam installation.

E. Terminate and seal top of sheet flashings.

## 3.6 WALKWAY INSTALLATION

A. Flexible Walkways: Install walkway products in locations indicated. Heat weld to substrate or adhere walkway products to substrate with compatible adhesive according to roofing system manufacturer's written instructions.

## 3.7 FIELD QUALITY CONTROL

A. Testing Agency: Owner will engage a qualified testing agency to perform tests and inspections.

B. Final Roof Inspection: Arrange for roofing system manufacturer's technical personnel to inspect roofing installation on completion.

C. Repair or remove and replace components of membrane roofing system where inspections indicate that they do not comply with specified requirements.

D. Additional inspections, at Contractor's expense, will be performed to determine compliance of replaced or additional work with specified requirements.

## 3.8 PROTECTING AND CLEANING

A. Protect membrane roofing system from damage and wear during remainder of construction period. When remaining construction will not affect or endanger roofing, inspect roofing for deterioration and damage, describing its nature and extent in a written report, with copies to Architect and Owner.

B. Correct deficiencies in or remove membrane roofing system that does not comply with requirements; repair substrates; and repair or reinstall membrane roofing system to a condition free of damage and deterioration at time of Final Completion and according to warranty requirements.

C. Clean overspray and spillage from adjacent construction using cleaning agents and procedures recommended by manufacturer of affected construction.

END OF SECTION 075423

# SECTION 077100 - ROOF SPECIALTIES

## PART 1 - GENERAL

### 1.1 RELATED DOCUMENTS

A. Drawings and general provisions of the Contract, including General and Supplementary Conditions and Division 01 Specification Sections, apply to this Section.

### 1.2 SUMMARY

A. Section Includes:

1. Copings.
2. Reglets and counterflashings.

B. Related Sections:

1. Division 06 Section for wood nailers, curbs, and blocking.

### 1.3 PERFORMANCE REQUIREMENTS

A. General Performance: Roof specialties shall withstand exposure to weather and resist thermally induced movement without failure, rattling, leaking, or fastener disengagement due to defective manufacture, fabrication, installation, or other defects in construction.

B. FM Approvals' Listing: Manufacture and install copings that are listed in FM Approvals' "RoofNav" and approved for windstorm classification. Identify materials with FM Approvals' markings.

C. SPRI Wind Design Standard: Manufacture and install according to SPRI ES-1 and capable of resisting design pressures:

D. Thermal Movements: Allow for thermal movements from ambient and surface temperature changes to prevent buckling, opening of joints, hole elongation, overstressing of components, failure of joint sealants, failure of connections, and other detrimental effects. Provide clips that resist rotation and avoid shear stress as a result of thermal movements. Base calculations on surface temperatures of materials due to both solar heat gain and nighttime-sky heat loss.

1. Temperature Change (Range): 120 deg F, ambient; 180 deg F, material surfaces.

### 1.4 SUBMITTALS

A. Product Data: For each type of product indicated. Include construction details, material descriptions, dimensions of individual components and profiles, and finishes.

B. Shop Drawings: For roof specialties. Include plans, elevations, expansion-joint locations, keyed details, and attachments to other work. Distinguish between plant- and field-assembled work. Include the following:

1. Details for expansion and contraction; locations of expansion joints, including direction of expansion and contraction.
2. Pattern of seams and layout of fasteners, cleats, clips, and other attachments.
3. Details of termination points and assemblies, including fixed points.
4. Details of special conditions.

C. Samples for Initial Selection: For each type of roof specialty indicated with factory-applied color finishes.

D. Samples for Verification: Made from 12-inch lengths of full-size components including fasteners, cover joints, accessories, and attachments.

E. Product Test Reports: Based on evaluation of comprehensive tests performed by a qualified testing agency.

F. Maintenance Data: For roofing specialties to include in maintenance manuals.

G. Warranty: Sample of special warranty.

1.5 QUALITY ASSURANCE

A. Mockups: Build mockups to verify selections made under sample submittals and to demonstrate aesthetic effects and set quality standards for fabrication and installation.

1. Build mockup of typical roof edge, approximately 10 feet long, including supporting construction, seams, attachments, underlayment, and accessories.
2. Approval of mockups does not constitute approval of deviations from the Contract Documents contained in mockups unless Architect specifically approves such deviations in writing.
3. Approved mockups may become part of the completed Work if undisturbed at time of Final Completion.

1.6 DELIVERY, STORAGE, AND HANDLING

A. Do not store roof specialties in contact with other materials that might cause staining, denting, or other surface damage. Store roof specialties away from uncured concrete and masonry.

B. Protect strippable protective covering on roof specialties from exposure to sunlight and high humidity, except to extent necessary for the period of roof specialties installation.

1.7 WARRANTY

A. Special Warranty: Manufacturer shall guarantee that the roof edge system will not blow off, leak, or cause membrane failure for wind conditions up to 110 mph.

B. Special Warranty on Painted Finishes: Manufacturer's standard form in which manufacturer agrees to repair finish or replace roof specialties that show evidence of deterioration of factory-applied finishes within specified warranty period.

1. Fluoropolymer Finish: Deterioration includes, but is not limited to, the following:

a. Color fading more than 5 Hunter units when tested according to ASTM D 2244.

b. Chalking in excess of a No. 8 rating when tested according to ASTM D 4214.
c. Cracking, checking, peeling, or failure of paint to adhere to bare metal.

2. Finish Warranty Period: 20 years from date of Final Completion.

PART 2 - PRODUCTS

2.1 EXPOSED METALS

A. Aluminum Extrusions: ASTM B 221, alloy and temper recommended by manufacturer for type of use and finish indicated, finished as follows:

1. Exposed High-Performance Organic Finish: Prepare, pretreat, and apply coating to exposed metal surfaces to comply with coating and resin manufacturers' written instructions.

a. Two-Coat Fluoropolymer: AAMA 2604. System consisting of primer and fluoropolymer color topcoat containing not less than 70 percent PVDF resin by weight.

2.2 CONCEALED METALS

A. Aluminum Extrusions: ASTM B 221, alloy and temper recommended by manufacturer for type of use and structural performance indicated, mill finished.

2.3 MISCELLANEOUS MATERIALS

A. General: Provide materials and types of fasteners, protective coatings, sealants, and other miscellaneous items required by manufacturer for a complete installation.

B. Fasteners: Manufacturer's recommended fasteners, suitable for application and designed to meet performance requirements. Furnish the following unless otherwise indicated:

1. Exposed Penetrating Fasteners: Gasketed screws with hex washer heads matching color of sheet metal.
2. Fasteners for Aluminum: Aluminum or Series 300 stainless steel.
3. Fasteners for Zinc-Coated (Galvanized) Steel Sheet: Series 300 stainless steel or hot-dip zinc-coated steel according to ASTM A 153/A 153M or ASTM F 2329.

C. Elastomeric Sealant: ASTM C 920, elastomeric polymer sealant of type, grade, class, and use classifications required by roofing-specialty manufacturer for each application.

D. Butyl Sealant: ASTM C 1311, single-component, solvent-release butyl rubber sealant; polyisobutylene plasticized; heavy bodied for hooked-type expansion joints with limited movement.

E. Bituminous Coating: Cold-applied asphalt emulsion complying with ASTM D 1187.

F. Asphalt Roofing Cement: ASTM D 4586, asbestos free, of consistency required for application.

## 2.4 COPINGS

A. Metal Copings: Manufactured coping system consisting of metal coping cap in section lengths not exceeding 12 feet, concealed anchorage; with corner units, end cap units, and concealed splice plates with finish matching coping caps.

1. Subject to compliance with requirements, provide “Perma-Tite Coping” as manufactured by Metal-Era, Inc., “Permasnap Coping System” as manufactured by Hickman, “Anchor Guard Gold Coping” as manufactured by Firestone Building Products or “Secure Edge Gold Coping” as manufactured by Carlisle SynTec Incorporated. Product to be approved by roofing system manufacturer specified in Section 075423 TPO Roofing.
2. Formed Aluminum Sheet Coping Caps: Aluminum sheet, 0.050 inch thick. Verify drawings for sizes.

    a. Surface: Smooth, flat finish.
    b. Finish: Two-coat fluoropolymer.
    c. Color: As selected by Architect from manufacturer’s full range.

3. Corners: Factory mitered and continuously welded.
4. Coping-Cap Attachment Method: Snap-on.

    a. Snap-on Coping Anchor Clips: Concealed, 20-gauge galvanized-steel sheet, with integral cleats.

## 2.5 REGLETS AND COUNTERFLASHINGS

A. Manufacturers: Subject to compliance with requirements, provide products by one of the following:

1. Castle Metal Products.
2. Cheney Flashing Company.
3. Fry Reglet Corporation.
4. Heckmann Building Products Inc.
5. Hickman Company, W. P.
6. Keystone Flashing Company, Inc.
7. Metal-Era, Inc.
8. Metal-Fab Manufacturing, LLC.

B. Reglets: Manufactured units formed to provide secure interlocking of separate reglet and counterflashing pieces, from the following exposed metal. Receiver metal to be custom fabricate to form an “S” shaped receiver in which a slip-type counterflashing can be installed and secured in place with stainless steel fasteners.

1. Stainless Steel: 0.019 inch thick.
2. Corners: Factory mitered and continuously welded.
3. Masonry Type, Embedded: Provide reglets with offset top flange for embedment in masonry mortar joint.

C. Counterflashings: Manufactured units of heights to overlap top edges of base flashings by 4 inches and in lengths not exceeding 12 feet designed to snap into reglets and compress against base flashings with joints lapped, from the following exposed metal:

1. Formed Aluminum: 0.040 inch thick.
2. Aluminum Finish: Two-coat fluoropolymer.
3. Color: As selected by Architect from manufacturer's full range.

## 2.6 GENERAL FINISH REQUIREMENTS

A. Comply with NAAMM's "Metal Finishes Manual for Architectural and Metal Products" for recommendations for applying and designating finishes.

B. Protect mechanical and painted finishes on exposed surfaces from damage by applying a strippable, temporary protective covering before shipping.

C. Appearance of Finished Work: Noticeable variations in same piece are not acceptable. Variations in appearance of adjoining components are acceptable if they are within the range of approved Samples and are assembled or installed to minimize contrast.

# PART 3 - EXECUTION

## 3.1 EXAMINATION

A. Examine substrates, areas, and conditions, with Installer present, to verify actual locations, dimensions, and other conditions affecting performance of the Work.

B. Examine walls, roof edges, and parapets for suitable conditions for roof specialties.

C. Verify that substrate is sound, dry, smooth, clean, sloped for drainage, and securely anchored.

D. Proceed with installation only after unsatisfactory conditions have been corrected.

## 3.2 INSTALLATION, GENERAL

A. General: Install roof specialties according to manufacturer's written instructions. Anchor roof specialties securely in place, with provisions for thermal and structural movement. Use fasteners, solder, protective coatings, separators, sealants, and other miscellaneous items as required to complete roof-specialty systems.

1. Install roof specialties level, plumb, true to line and elevation; with limited oil-canning and without warping, jogs in alignment, buckling, or tool marks.
2. Provide uniform, neat seams with minimum exposure of solder and sealant.
3. Install roof specialties to fit substrates and to result in watertight performance. Verify shapes and dimensions of surfaces to be covered before manufacture.
4. Torch cutting of roof specialties is not permitted.
5. Do not use graphite pencils to mark metal surfaces.

B. Metal Protection: Protect metals against galvanic action by separating dissimilar metals from contact with each other or with corrosive substrates by painting contact surfaces with bituminous coating or by other permanent separation as recommended by manufacturer.

1. Coat concealed side of roof specialties with bituminous coating where in contact with wood, ferrous metal, or cementitious construction.
2. Underlayment: Where installing metal flashing directly on cementitious or wood substrates.
3. Bed flanges in thick coat of asphalt roofing cement where required by manufacturers of roof specialties for waterproof performance.

C. Expansion Provisions: Allow for thermal expansion of exposed roof specialties.

1. Space movement joints at a maximum of 12 feet with no joints within 18 inches of corners or intersections unless otherwise shown on Drawings.
2. When ambient temperature at time of installation is between 40 and 70 deg F, set joint members for 50 percent movement each way. Adjust setting proportionately for installation at higher ambient temperatures.

D. Seal joints with sealant as required by roofing-specialty manufacturer.

E. Seal joints as required for watertight construction. Place sealant to be completely concealed in joint. Do not install sealants at temperatures below 40 deg F.

F. Soldered Joints: Clean surfaces to be soldered, removing oils and foreign matter. Pre-tin edges of sheets to be soldered to a width of 1-1/2 inches except reduce pre-tinning where pre-tinned surface would show in completed Work. Tin edges of uncoated copper sheets using solder for copper. Do not use torches for soldering. Heat surfaces to receive solder and flow solder into joint. Fill joint completely. Completely remove flux and spatter from exposed surfaces.

## 3.3 COPING INSTALLATION

A. Install cleats, anchor plates, and other anchoring and attachment accessories and devices with concealed fasteners.

B. Anchor copings to meet performance requirements.

1. Interlock face and back leg drip edges of snap-on coping cap into cleated anchor plates anchored to substrate at 30-inch centers.
2. Interlock face leg drip edge into continuous cleat anchored to substrate at 16-inch centers. Anchor back leg of coping with screw fasteners and elastomeric washers at 16-inch centers.

## 3.4 REGLET AND COUNTERFLASHING INSTALLATION

A. General: Coordinate installation of reglets and counterflashings with installation of base flashings.

B. Counterflashings: Insert counterflashings into reglets or other indicated receivers; ensure that counterflashings overlap 4 inches over top edge of base flashings. Lap counterflashing joints a minimum of 4 inches and bed with sealant. Fit counterflashings tightly to base flashings.

## 3.5 CLEANING AND PROTECTION

A. Clean exposed metal surfaces of substances that interfere with uniform oxidation and weathering.

B. Clean and neutralize flux materials. Clean off excess solder and sealants.

C. Remove temporary protective coverings and strippable films as roof specialties are installed. On completion of installation, clean finished surfaces including removing unused fasteners, metal filings, pop rivet stems, and pieces of flashing. Maintain roof specialties in a clean condition during construction.

D. Replace roof specialties that have been damaged or that cannot be successfully repaired by finish touchup or similar minor repair procedures.

END OF SECTION 077100

# SECTION 079200 - JOINT SEALANTS

## PART 1 - GENERAL

### 1.1 RELATED DOCUMENTS

A. Drawings and general provisions of the Contract, including General and Supplementary Conditions and Division 01 Specification Sections, apply to this Section.

### 1.2 SUMMARY

A. Section Includes:

1. Urethane joint sealants.
2. Latex joint sealants.
3. Acoustical joint sealants.

B. Related Sections:

1. Division 04 Section "Unit Masonry" for masonry control and expansion joint fillers and gaskets.
2. Division 08 Section "Glazing" for glazing sealants.

### 1.3 PRECONSTRUCTION TESTING

A. Preconstruction Compatibility and Adhesion Testing: Submit to joint-sealant manufacturers, for testing indicated below, samples of materials that will contact or affect joint sealants.

1. Use ASTM C 1087 to determine whether priming and other specific joint preparation techniques are required to obtain rapid, optimum adhesion of joint sealants to joint substrates.
2. Submit pieces of each kind of material, including joint substrates, shims, joint-sealant backings, secondary seals, and miscellaneous materials.
3. Schedule sufficient time for testing and analyzing results to prevent delaying the Work.
4. For materials failing tests, obtain joint-sealant manufacturer's written instructions for corrective measures including use of specially formulated primers.
5. Testing will not be required if joint-sealant manufacturers submit joint preparation data that are based on previous testing, not older than 24 months, of sealant products for adhesion to, and compatibility with, joint substrates and other materials matching those submitted.

B. Preconstruction Field-Adhesion Testing: Before installing sealants, field test their adhesion to Project joint substrates as follows:

1. Locate test joints where indicated on Project or, if not indicated, as directed by Architect.
2. Conduct field tests for each application indicated below:

a. Each kind of sealant and joint substrate indicated.

3. Notify Architect seven days in advance of dates and times when test joints will be erected.
4. Arrange for tests to take place with joint-sealant manufacturer's technical representative present.

   a. Test Method: Test joint sealants according to Method A, Field-Applied Sealant Joint Hand Pull Tab, in Appendix X1 in ASTM C 1193 or Method A, Tail Procedure, in ASTM C 1521.

      1) For joints with dissimilar substrates, verify adhesion to each substrate separately; extend cut along one side, verifying adhesion to opposite side. Repeat procedure for opposite side.

5. Report whether sealant failed to adhere to joint substrates or tore cohesively. Include data on pull distance used to test each kind of product and joint substrate. For sealants that fail adhesively, retest until satisfactory adhesion is obtained.
6. Evaluation of Preconstruction Field-Adhesion-Test Results: Sealants not evidencing adhesive failure from testing, in absence of other indications of noncompliance with requirements, will be considered satisfactory. Do not use sealants that fail to adhere to joint substrates during testing.

## 1.4 SUBMITTALS

A. Product Data: For each joint-sealant product indicated.

B. Samples for Initial Selection: Manufacturer's color charts consisting of strips of cured sealants showing the full range of colors available for each product exposed to view.

C. Samples for Verification: For each kind and color of joint sealant required, provide Samples with joint sealants in 1/2-inch- wide joints formed between two 6-inch- long strips of material matching the appearance of exposed surfaces adjacent to joint sealants.

D. Joint-Sealant Schedule: Include the following information:

   1. Joint-sealant application, joint location, and designation.
   2. Joint-sealant manufacturer and product name.
   3. Joint-sealant formulation.
   4. Joint-sealant color.

E. Product Certificates: For each kind of joint sealant and accessory, from manufacturer.

F. Sealant, Waterproofing, and Restoration Institute (SWRI) Validation Certificate: For each sealant specified to be validated by SWRI's Sealant Validation Program.

G. Product Test Reports: Based on evaluation of comprehensive tests performed by a qualified testing agency, indicating that sealants comply with requirements.

H. Preconstruction Compatibility and Adhesion Test Reports: From sealant manufacturer, indicating the following:

1. Materials forming joint substrates and joint-sealant backings have been tested for compatibility and adhesion with joint sealants.
2. Interpretation of test results and written recommendations for primers and substrate preparation needed for adhesion.

I. Preconstruction Field-Adhesion Test Reports: Indicate which sealants and joint preparation methods resulted in optimum adhesion to joint substrates based on testing specified in "Preconstruction Testing" Article.

J. Field-Adhesion Test Reports: For each sealant application tested.

K. Warranties: Sample of special warranties.

## 1.5 QUALITY ASSURANCE

A. Installer Qualifications: Manufacturer's authorized representative who is trained and approved for installation of units required for this Project.

B. Source Limitations: Obtain each kind of joint sealant from single source from single manufacturer.

C. Product Testing: Test joint sealants using a qualified testing agency.

1. Testing Agency Qualifications: An independent testing agency qualified according to ASTM C 1021 to conduct the testing indicated.
2. Test according to SWRI's Sealant Validation Program for compliance with requirements specified by reference to ASTM C 920 for adhesion and cohesion under cyclic movement, adhesion-in-peel, and indentation hardness.

D. Mockups: Install sealant in mockups of assemblies specified in other Sections that are indicated to receive joint sealants specified in this Section. Use materials and installation methods specified in this Section.

## 1.6 PROJECT CONDITIONS

A. Do not proceed with installation of joint sealants under the following conditions:

1. When ambient and substrate temperature conditions are outside limits permitted by joint-sealant manufacturer or are below 40 deg F.
2. When joint substrates are wet.
3. Where joint widths are less than those allowed by joint-sealant manufacturer for applications indicated.
4. Where contaminants capable of interfering with adhesion have not yet been removed from joint substrates.

## 1.7 WARRANTY

A. Special Installer's Warranty: Manufacturer's standard form in which Installer agrees to repair or replace joint sealants that do not comply with performance and other requirements specified in this Section within specified warranty period.

1. Warranty Period: Two years from date of Final Completion.

B. Special Manufacturer's Warranty: Manufacturer's standard form in which joint-sealant manufacturer agrees to furnish joint sealants to repair or replace those that do not comply with performance and other requirements specified in this Section within specified warranty period.

1. Warranty Period: Five years from date of Final Completion.

C. Special warranties specified in this article exclude deterioration or failure of joint sealants from the following:

1. Movement of the structure caused by structural settlement or errors attributable to design or construction resulting in stresses on the sealant exceeding sealant manufacturer's written specifications for sealant elongation and compression.
2. Disintegration of joint substrates from natural causes exceeding design specifications.
3. Mechanical damage caused by individuals, tools, or other outside agents.
4. Changes in sealant appearance caused by accumulation of dirt or other atmospheric contaminants.

# PART 2 - PRODUCTS

## 2.1 MATERIALS, GENERAL

A. Compatibility: Provide joint sealants, backings, and other related materials that are compatible with one another and with joint substrates under conditions of service and application, as demonstrated by joint-sealant manufacturer, based on testing and field experience.

B. VOC Content of Interior Sealants: Provide sealants and sealant primers for use inside the weatherproofing system that comply with the following limits for VOC content when calculated according to 40 CFR 59, Part 59, Subpart D (EPA Method 24):

1. Architectural Sealants: 250 g/L.
2. Sealant Primers for Nonporous Substrates: 250 g/L.
3. Sealant Primers for Porous Substrates: 775 g/L.

C. Low-Emitting Interior Sealants: Sealants and sealant primers used inside the weatherproofing system shall comply with the testing and product requirements of the California Department of Health Services' "Standard Practice for the Testing of Volatile Organic Emissions from Various Sources Using Small-Scale Environmental Chambers."

D. Liquid-Applied Joint Sealants: Comply with ASTM C 920 and other requirements indicated for each liquid-applied joint sealant specified, including those referencing ASTM C 920 classifications for type, grade, class, and uses related to exposure and joint substrates.

1. Suitability for Immersion in Liquids. Where sealants are indicated for Use I for joints that will be continuously immersed in liquids, provide products that have undergone testing according to ASTM C 1247. Liquid used for testing sealants is deionized water, unless otherwise indicated.

E. Stain-Test-Response Characteristics: Where sealants are specified to be nonstaining to porous substrates, provide products that have undergone testing according to ASTM C 1248 and have not stained porous joint substrates indicated for Project.

F. Suitability for Contact with Food: Where sealants are indicated for joints that will come in repeated contact with food, provide products that comply with 21 CFR 177.2600.

## 2.2 URETHANE JOINT SEALANTS

A. Single-Component, Nonsag, Urethane Joint Sealant: ASTM C 920, Type S, Grade NS, Class 25, for Use NT. To be used at all vertical and horizontal locations at surfaces not to be pained as indicated.

1. Products: Subject to compliance with requirements, provide one of the following:

a. BASF Building Systems; Sonolastic NP1.
b. Bostik, Inc.; Chem-Calk 900.
c. Pecora Corporation; Dynatrol I-XL.
d. Sika Corporation, Construction Products Division; Sikaflex - 1a.
e. Tremco Incorporated; Dymonic.

## 2.3 LATEX JOINT SEALANTS

A. Latex Joint Sealant: Acrylic latex or siliconized acrylic latex, ASTM C 834, Type OP, Grade NF. To be used at all interior surfaces to be painted as indicated.

1. Products: Subject to compliance with requirements, provide one of the following:

a. BASF Building Systems; Sonolac.
b. Bostik, Inc.; Chem-Calk 600.
c. Pecora Corporation; AC-20+.
d. Tremco Incorporated; Tremflex 834.

## 2.4 ACOUSTICAL JOINT SEALANTS

A. Acoustical Joint Sealant: Manufacturer's standard nonsag, paintable, nonstaining latex sealant complying with ASTM C 834. Product effectively reduces airborne sound transmission through perimeter joints and openings in building construction as demonstrated by testing representative assemblies according to ASTM E 90.

1. Products: Subject to compliance with requirements, provide one of the following:

a. Pecora Corporation; AC-20 FTR.
b. USG Corporation; SHEETROCK Acoustical Sealant.

c. Henkel Corporation; OSI SC-175.

## 2.5 FIRE-RESISTANT JOINT SEALANTS

A. General; provide manufacturer's standard firestopping sealant, with accessory materials, having fire-resistance ratings indicated as established by testing identical assemblies per ASTM E 814 by Underwriters Laboratory, Inc. or other testing and inspecting agency acceptable to authorities having jurisdiction.

B. One-part firestopping sealant; one part elastomeric sealant formulated for use in a through-penetration firestop system for sealing openings around cables, conduit, pipes, and similar penetrations through walls and floors.

C. Products; subject to compliance with requirements, provide one of the following:

1. "Dow Corning Fire Stop Sealant"; Dow Corning Corp.
2. "3M Fire Barrier Caulk CP-25"; Electrical Products Div./3M.
3. "RTV 7403"; General Electric Company.

## 2.6 JOINT SEALANT BACKING

A. General: Provide sealant backings of material that are nonstaining; are compatible with joint substrates, sealants, primers, and other joint fillers; and are approved for applications indicated by sealant manufacturer based on field experience and laboratory testing.

B. Cylindrical Sealant Backings: ASTM C 1330, As approved in writing by joint-sealant manufacturer for joint application indicated], and of size and density to control sealant depth and otherwise contribute to producing optimum sealant performance.

C. Bond-Breaker Tape: Polyethylene tape or other plastic tape recommended by sealant manufacturer for preventing sealant from adhering to rigid, inflexible joint-filler materials or joint surfaces at back of joint. Provide self-adhesive tape where applicable.

## 2.7 MISCELLANEOUS MATERIALS

A. Primer: Material recommended by joint-sealant manufacturer where required for adhesion of sealant to joint substrates indicated, as determined from preconstruction joint-sealant-substrate tests and field tests.

B. Cleaners for Nonporous Surfaces: Chemical cleaners acceptable to manufacturers of sealants and sealant backing materials, free of oily residues or other substances capable of staining or harming joint substrates and adjacent nonporous surfaces in any way, and formulated to promote optimum adhesion of sealants to joint substrates.

C. Masking Tape: Nonstaining, nonabsorbent material compatible with joint sealants and surfaces adjacent to joints.

# PART 3 - EXECUTION

## 3.1 EXAMINATION

A. Examine joints indicated to receive joint sealants, with Installer present, for compliance with requirements for joint configuration, installation tolerances, and other conditions affecting joint-sealant performance.

B. Proceed with installation only after unsatisfactory conditions have been corrected.

## 3.2 PREPARATION

A. Surface Cleaning of Joints: Clean out joints immediately before installing joint sealants to comply with joint-sealant manufacturer's written instructions and the following requirements:

1. Remove all foreign material from joint substrates that could interfere with adhesion of joint sealant, including dust, paints (except for permanent, protective coatings tested and approved for sealant adhesion and compatibility by sealant manufacturer), old joint sealants, oil, grease, waterproofing, water repellents, water, surface dirt, and frost.
2. Clean porous joint substrate surfaces by brushing, grinding, mechanical abrading, or a combination of these methods to produce a clean, sound substrate capable of developing optimum bond with joint sealants. Remove loose particles remaining after cleaning operations above by vacuuming or blowing out joints with oil-free compressed air. Porous joint substrates include the following:

    a. Concrete.
    b. Masonry.

3. Remove laitance and form-release agents from concrete.
4. Clean nonporous joint substrate surfaces with chemical cleaners or other means that do not stain, harm substrates, or leave residues capable of interfering with adhesion of joint sealants. Nonporous joint substrates include the following:

    a. Metal.
    b. Glass.

B. Joint Priming: Prime joint substrates where recommended by joint-sealant manufacturer or as indicated by preconstruction joint-sealant-substrate tests or prior experience. Apply primer to comply with joint-sealant manufacturer's written instructions. Confine primers to areas of joint-sealant bond; do not allow spillage or migration onto adjoining surfaces.

C. Masking Tape: Use masking tape where required to prevent contact of sealant or primer with adjoining surfaces that otherwise would be permanently stained or damaged by such contact or by cleaning methods required to remove sealant smears. Remove tape immediately after tooling without disturbing joint seal.

## 3.3 INSTALLATION OF JOINT SEALANTS

A. General: Comply with joint-sealant manufacturer's written installation instructions for products and applications indicated, unless more stringent requirements apply.

B. Sealant Installation Standard: Comply with recommendations in ASTM C 1193 for use of joint sealants as applicable to materials, applications, and conditions indicated.

C. Install sealant backings of kind indicated to support sealants during application and at position required to produce cross-sectional shapes and depths of installed sealants relative to joint widths that allow optimum sealant movement capability.

1. Do not leave gaps between ends of sealant backings.
2. Do not stretch, twist, puncture, or tear sealant backings.
3. Remove absorbent sealant backings that have become wet before sealant application and replace them with dry materials.

D. Install bond-breaker tape behind sealants where sealant backings are not used between sealants and backs of joints.

E. Install sealants using proven techniques that comply with the following and at the same time backings are installed:

1. Place sealants so they directly contact and fully wet joint substrates.
2. Completely fill recesses in each joint configuration.
3. Produce uniform, cross-sectional shapes and depths relative to joint widths that allow optimum sealant movement capability.

F. Tooling of Nonsag Sealants: Immediately after sealant application and before skinning or curing begins, tool sealants according to requirements specified in subparagraphs below to form smooth, uniform beads of configuration indicated; to eliminate air pockets; and to ensure contact and adhesion of sealant with sides of joint.

1. Remove excess sealant from surfaces adjacent to joints.
2. Use tooling agents that are approved in writing by sealant manufacturer and that do not discolor sealants or adjacent surfaces.
3. Provide concave joint profile per Figure 8A in ASTM C 1193, unless otherwise indicated.
4. Provide flush joint profile where indicated per Figure 8B in ASTM C 1193.
5. Provide recessed joint configuration of recess depth and at locations indicated per Figure 8C in ASTM C 1193.

    a. Use masking tape to protect surfaces adjacent to recessed tooled joints.

G. Acoustical Sealant Installation: At sound-rated assemblies and elsewhere as indicated, seal construction at perimeters, behind control joints, and at openings and penetrations with a continuous bead of acoustical sealant. Install acoustical sealant at both faces of partitions at perimeters and through penetrations. Comply with ASTM C 919 and with manufacturer's written recommendations.

## 3.4 FIELD QUALITY CONTROL

A. Field-Adhesion Testing: Field test joint-sealant adhesion to joint substrates as follows:

1. Test Method: Test joint sealants according to Method A, Field-Applied Sealant Joint Hand Pull Tab, in Appendix X1 in ASTM C 1193 or Method A, Tail Procedure, in ASTM C 1521.

   a. For joints with dissimilar substrates, verify adhesion to each substrate separately; extend cut along one side, verifying adhesion to opposite side. Repeat procedure for opposite side.

2. Inspect tested joints and report on the following:

   a. Whether sealants filled joint cavities and are free of voids.
   b. Whether sealant dimensions and configurations comply with specified requirements.
   c. Whether sealants in joints connected to pulled-out portion failed to adhere to joint substrates or tore cohesively. Include data on pull distance used to test each kind of product and joint substrate. Compare these results to determine if adhesion passes sealant manufacturer's field-adhesion hand-pull test criteria.

3. Record test results in a field-adhesion-test log. Include dates when sealants were installed, names of persons who installed sealants, test dates, test locations, whether joints were primed, adhesion results and percent elongations, sealant fill, sealant configuration, and sealant dimensions.
4. Repair sealants pulled from test area by applying new sealants following same procedures used originally to seal joints. Ensure that original sealant surfaces are clean and that new sealant contacts original sealant.

B. Evaluation of Field-Adhesion Test Results: Sealants not evidencing adhesive failure from testing or noncompliance with other indicated requirements will be considered satisfactory. Remove sealants that fail to adhere to joint substrates during testing or to comply with other requirements. Retest failed applications until test results prove sealants comply with indicated requirements.

## 3.5 CLEANING

A. Clean off excess sealant or sealant smears adjacent to joints as the Work progresses by methods and with cleaning materials approved in writing by manufacturers of joint sealants and of products in which joints occur.

## 3.6 PROTECTION

A. Protect joint sealants during and after curing period from contact with contaminating substances and from damage resulting from construction operations or other causes so sealants are without deterioration or damage at time of Final Completion. If, despite such protection, damage or deterioration occurs, cut out and remove damaged or deteriorated joint sealants immediately so installations with repaired areas are indistinguishable from original work.

END OF SECTION 079200

# SECTION 081113 - HOLLOW METAL FRAMES

## PART 1 - GENERAL

### 1.1 RELATED DOCUMENTS

A. Drawings and general provisions of the Contract, including General and Supplementary Conditions and Division 01 Specification Sections, apply to this Section.

### 1.2 SUMMARY

A. Section Includes:

1. Standard hollow metal frames.

B. Related Sections:

1. Division 04 Section "Unit Masonry" for embedding anchors for hollow metal work into masonry construction.
2. Division 08 Section "Door Hardware".

### 1.3 DEFINITIONS

A. Minimum Thickness: Minimum thickness of base metal without coatings.

B. Standard Hollow Metal Work: Hollow metal work fabricated according to ANSI/SDI A250.8.

### 1.4 SUBMITTALS

A. Product Data: For each type of product indicated. Include construction details, material descriptions, core descriptions, fire-resistance rating, and finishes.

B. Shop Drawings: Include the following:

1. Frame details for each frame type, including dimensioned profiles and metal thicknesses.
2. Locations of reinforcement and preparations for hardware.
3. Details of anchorages, joints, field splices, and connections.
4. Details of accessories.
5. Details of moldings, removable stops, and glazing.

C. Other Action Submittals:

1. Schedule: Provide a schedule of hollow metal work prepared by or under the supervision of supplier, using same reference numbers for details and openings as those on Drawings. Coordinate with door hardware schedule.

## 1.5 QUALITY ASSURANCE

A. Source Limitations: Obtain hollow metal work from single source from single manufacturer.

B. Fire-Rated Door Assemblies: Assemblies complying with NFPA 80 that are listed and labeled by a qualified testing agency, for fire-protection ratings indicated, based on testing at positive pressure according to NFPA 252.

1. Temperature-Rise Limit: At vertical exit enclosures and exit passageways, provide doors that have a maximum transmitted temperature end point of not more than 450 deg F above ambient after 30 minutes of standard fire-test exposure.

## 1.6 DELIVERY, STORAGE, AND HANDLING

A. Deliver hollow metal work palletized, wrapped, or crated to provide protection during transit and Project-site storage. Do not use nonvented plastic.

1. Provide additional protection to prevent damage to finish of factory-finished units.

B. Deliver welded frames with two removable spreader bars across bottom of frames, tack welded to jambs and mullions.

C. Store hollow metal work under cover at Project site. Place in stacks of five units maximum in a vertical position with heads up, spaced by blocking, on minimum 4-inch- high wood blocking. Do not store in a manner that traps excess humidity.

1. Provide minimum 1/4-inch space between each stacked door to permit air circulation.

## 1.7 COORDINATION

A. Coordinate installation of anchorages for hollow metal frames. Furnish setting drawings, templates, and directions for installing anchorages, including sleeves, concrete inserts, anchor bolts, and items with integral anchors. Deliver such items to Project site in time for installation.

# PART 2 - PRODUCTS

## 2.1 MANUFACTURERS

A. Manufacturers: Subject to compliance with requirements, provide products by one of the following:

1. Amweld Building Products, LLC.
2. Benchmark; a division of Therma-Tru Corporation.
3. Ceco Door Products; an Assa Abloy Group company.
4. Curries Company; an Assa Abloy Group company.
5. Kewanee Corporation.
6. Steelcraft; an Ingersoll-Rand company.
7. Windsor Republic Doors.

## 2.2 REGULATORY REQUIREMENTS

A. Fire-Rated Assemblies: Complying with NFPA 80 and listed and labeled by a qualified testing agency acceptable to authorities having jurisdiction for fire protection ratings indicated, based on testing at positive pressure according to UL 10C.

## 2.3 MATERIALS

A. Recycled Content of Steel Products: Postconsumer recycled content plus one-half of preconsumer recycled content not less than 25%.

B. Cold-Rolled Steel Sheet: ASTM A 1008/A 1008M, Commercial Steel (CS), Type B; suitable for exposed applications.

C. Frame Anchors: ASTM A 591/A 591M, Commercial Steel (CS), 40Z coating designation; mill phosphatized.

1. For anchors built into exterior walls, steel sheet complying with ASTM A 1008/A 1008M or ASTM A 1011/A 1011M, hot-dip galvanized according to ASTM A 153/A 153M, Class B.

D. Inserts, Bolts, and Fasteners: Hot-dip galvanized according to ASTM A 153/A 153M.

E. Powder-Actuated Fasteners in Concrete: Fastener system of type suitable for application indicated, fabricated from corrosion-resistant materials, with clips or other accessory devices for attaching hollow metal frames of type indicated.

F. Grout: ASTM C 476, except with a maximum slump of 4 inches, as measured according to ASTM C 143/C 143M.

G. Mineral-Fiber Insulation: ASTM C 665, Type I (blankets without membrane facing); consisting of fibers manufactured from slag or rock wool with 6- to 12-lb/cu. ft. density; with maximum flame-spread and smoke-development indexes of 25 and 50, respectively; passing ASTM E 136 for combustion characteristics.

H. Bituminous Coating: Cold-applied asphalt mastic, SSPC-Paint 12, compounded for 15-mil dry film thickness per coat. Provide inert-type noncorrosive compound free of asbestos fibers, sulfur components, and other deleterious impurities.

## 2.4 STANDARD HOLLOW METAL FRAMES

A. General: Comply with ANSI/SDI A250.8 and with details indicated for type and profile.

B. Interior Frames: Fabricated from cold-rolled steel sheet.

1. Fabricate frames with mitered or coped corners.
2. Fabricate frames as full profile welded unless otherwise indicated.
3. Frames: 0.053-inch- thick steel sheet.
4. Provide extra stops to receive 5/8” operable integral horizontal blinds at all interior borrowed lite and classroom sidelights. Provide remotely operated horizontal louver

blinds in the space between the two panes of glass. Reference Section 122113 Horizontal Louver Blinds. Operating hardware located on inside face of sash.

C. Hardware Reinforcement: Fabricate according to ANSI/SDI A250.6 with reinforcement plates from same material as frames.

## 2.5 FRAME ANCHORS

A. Jamb Anchors:

1. Masonry Type: Adjustable strap-and-stirrup or T-shaped anchors to suit frame size, not less than 0.042 inch thick, with corrugated or perforated straps not less than 2 inches wide by 10 inches long; or wire anchors not less than 0.177 inch thick.

B. Floor Anchors: Formed from same material as frames, not less than 0.042 inch thick, and as follows:

1. Monolithic Concrete Slabs: Clip-type anchors, with two holes to receive fasteners.
2. Separate Topping Concrete Slabs: Adjustable-type anchors with extension clips, allowing not less than 2-inch height adjustment. Terminate bottom of frames at finish floor surface.

## 2.6 STOPS AND MOLDINGS

A. Fixed Frame Moldings: Formed integral with hollow metal frames, a minimum of 5/8 inch high unless otherwise indicated.

B. Loose Stops for Glazed Lites in Frames: Minimum 0.032 inch thick, fabricated from same material as frames in which they are installed.

## 2.7 ACCESSORIES

A. Mullions and Transom Bars: Join to adjacent members by welding or rigid mechanical anchors.

B. Grout Guards: Formed from same material as frames, not less than 0.016 inch thick.

## 2.8 FABRICATION

A. Fabricate hollow metal work to be rigid and free of defects, warp, or buckle. Accurately form metal to required sizes and profiles, with minimum radius for thickness of metal. Where practical, fit and assemble units in manufacturer's plant. To ensure proper assembly at Project site, clearly identify work that cannot be permanently factory assembled before shipment.

B. Hollow Metal Frames: Where frames are fabricated in sections due to shipping or handling limitations, provide alignment plates or angles at each joint, fabricated of same thickness metal as frames.

1. Welded Frames: Weld flush face joints continuously; grind, fill, dress, and make smooth, flush, and invisible.
2. Provide closed tubular members with no visible face seams or joints, fabricated from same material as door frame. Fasten members at crossings and to jambs by butt welding.
3. Provide countersunk, flat- or oval-head exposed screws and bolts for exposed fasteners unless otherwise indicated.
4. Grout Guards: Weld guards to frame at back of hardware mortises in frames to be grouted.
5. Floor Anchors: Weld anchors to bottom of jambs and mullions with at least four spot welds per anchor.
6. Jamb Anchors: Provide number and spacing of anchors as follows:

    a. Masonry Type: Locate anchors not more than 18 inches from top and bottom of frame. Space anchors not more than 32 inches o.c. and as follows:

        1) Two anchors per jamb up to 60 inches high.
        2) Three anchors per jamb from 60 to 90 inches high.
        3) Four anchors per jamb from 90 to 120 inches high.
        4) Four anchors per jamb plus 1 additional anchor per jamb for each 24 inches or fraction thereof above 120 inches high.

    b. Compression Type: Not less than two anchors in each jamb.
    c. Postinstalled Expansion Type: Locate anchors not more than 6 inches from top and bottom of frame. Space anchors not more than 26 inches o.c.

7. Door Silencers: Except on weather-stripped doors, drill stops to receive door silencers as follows. Keep holes clear during construction.

    a. Single-Door Frames: Drill stop in strike jamb to receive three door silencers.
    b. Double-Door Frames: Drill stop in head jamb to receive two door silencers.

C. Fabricate concealed stiffeners, edge channels, and hardware reinforcement from either cold- or hot-rolled steel sheet.

D. Hardware Preparation: Factory prepare hollow metal work to receive templated mortised hardware; include cutouts, reinforcement, mortising, drilling, and tapping according to the Door Hardware Schedule and templates furnished as specified in Division 08 Section "Door Hardware."

1. Locate hardware as indicated, or if not indicated, according to ANSI/SDI A250.8.
2. Reinforce frames to receive nontemplated, mortised and surface-mounted door hardware.
3. Comply with applicable requirements in ANSI/SDI A250.6 and ANSI/DHI A115 Series specifications for preparation of hollow metal work for hardware.

E. Stops and Moldings: Provide stops and moldings around glazed lites where indicated. Form corners of stops and moldings with butted or mitered hairline joints.

1. Single Glazed Lites: Provide fixed stops and moldings welded on secure side of hollow metal work.
2. Provide fixed frame moldings on secure side of interior frames.
3. Provide loose stops and moldings on inside of hollow metal work.

4. Coordinate rabbet width between fixed and removable stops with type of glazing and type of installation indicated.

## 2.9 STEEL FINISHES

A. Prime Finish: Apply manufacturer's standard primer immediately after cleaning and pretreating.

1. Shop Primer: Manufacturer's standard, fast-curing, lead- and chromate-free primer complying with ANSI/SDI A250.10 acceptance criteria; recommended by primer manufacturer for substrate; compatible with substrate and field-applied coatings despite prolonged exposure.

# PART 3 - EXECUTION

## 3.1 EXAMINATION

A. Examine substrates, areas, and conditions, with Installer present, for compliance with requirements for installation tolerances and other conditions affecting performance of the Work.

B. Examine roughing-in for embedded and built-in anchors to verify actual locations before frame installation.

C. For the record, prepare written report, endorsed by Installer, listing conditions detrimental to performance of the Work.

D. Proceed with installation only after unsatisfactory conditions have been corrected.

## 3.2 PREPARATION

A. Remove welded-in shipping spreaders installed at factory. Restore exposed finish by grinding, filling, and dressing, as required to make repaired area smooth, flush, and invisible on exposed faces.

B. Prior to installation, adjust and securely brace welded hollow metal frames for squareness, alignment, twist, and plumbness to the following tolerances:

1. Squareness: Plus or minus 1/16 inch, measured at door rabbet on a line 90 degrees from jamb perpendicular to frame head.
2. Alignment: Plus or minus 1/16 inch, measured at jambs on a horizontal line parallel to plane of wall.
3. Twist: Plus or minus 1/16 inch, measured at opposite face corners of jambs on parallel lines, and perpendicular to plane of wall.
4. Plumbness: Plus or minus 1/16 inch, measured at jambs on a perpendicular line from head to floor.

C. Drill and tap frames to receive nontemplated, mortised, and surface-mounted door hardware.

## 3.3 INSTALLATION

A. General: Install hollow metal work plumb, rigid, properly aligned, and securely fastened in place; comply with Drawings and manufacturer's written instructions.

B. Hollow Metal Frames: Install hollow metal frames of size and profile indicated. Comply with ANSI/SDI A250.11.

1. Set frames accurately in position, plumbed, aligned, and braced securely until permanent anchors are set. After wall construction is complete, remove temporary braces, leaving surfaces smooth and undamaged.

    a. At fire-protection-rated openings, install frames according to NFPA 80.
    b. Install frames with removable glazing stops located on secure side of opening.
    c. Install door silencers in frames before grouting.
    d. Remove temporary braces necessary for installation only after frames have been properly set and secured.
    e. Check plumbness, squareness, and twist of frames as walls are constructed. Shim as necessary to comply with installation tolerances.
    f. Field apply bituminous coating to backs of frames that are filled with grout containing antifreezing agents.

2. Floor Anchors: Provide floor anchors for each jamb and mullion that extends to floor, and secure with postinstalled expansion anchors.

    a. Floor anchors may be set with powder-actuated fasteners instead of postinstalled expansion anchors if so indicated and approved on Shop Drawings.

3. Masonry Walls: Coordinate installation of frames to allow for solidly filling space between frames and masonry with grout.
4. In-Place Concrete or Masonry Construction: Secure frames in place with postinstalled expansion anchors. Countersink anchors, and fill and make smooth, flush, and invisible on exposed faces.
5. Installation Tolerances: Adjust hollow metal door frames for squareness, alignment, twist, and plumb to the following tolerances:

    a. Squareness: Plus or minus 1/16 inch, measured at door rabbet on a line 90 degrees from jamb perpendicular to frame head.
    b. Alignment: Plus or minus 1/16 inch, measured at jambs on a horizontal line parallel to plane of wall.
    c. Twist: Plus or minus 1/16 inch, measured at opposite face corners of jambs on parallel lines, and perpendicular to plane of wall.
    d. Plumbness: Plus or minus 1/16 inch, measured at jambs at floor.

C. Glazing: Comply with installation requirements in Division 08 Section "Glazing" and with hollow metal manufacturer's written instructions.

1. Secure stops with countersunk flat- or oval-head machine screws spaced uniformly not more than 9 inches o.c. and not more than 2 inches o.c. from each corner.

## 3.4 ADJUSTING AND CLEANING

A. Final Adjustments: Check and readjust operating hardware items immediately before final inspection. Leave work in complete and proper operating condition. Remove and replace defective work, including hollow metal work that is warped, bowed, or otherwise unacceptable.

B. Remove grout and other bonding material from hollow metal work immediately after installation.

C. Prime-Coat Touchup: Immediately after erection, sand smooth rusted or damaged areas of prime coat and apply touchup of compatible air-drying, rust-inhibitive primer.

END OF SECTION 081113

# SECTION 081416 - FLUSH WOOD DOORS

## PART 1 - GENERAL

### 1.1 RELATED DOCUMENTS

A. Drawings and general provisions of the Contract, including General and Supplementary Conditions and Division 01 Specification Sections, apply to this Section.

### 1.2 SUMMARY

A. Section Includes:

1. Solid-core doors with wood-veneer faces.
2. Factory finishing flush wood doors.

B. Related Sections:

1. Division 08 Section “Hardware.”

### 1.3 SUBMITTALS

A. Product Data: For each type of door indicated. Include details of core and edge construction. Include factory-finishing specifications.

B. Shop Drawings: Indicate location, size, and hand of each door; elevation of each kind of door; construction details not covered in Product Data; location and extent of hardware blocking; and other pertinent data.

1. Indicate dimensions and locations of mortises and holes for hardware.
2. Indicate dimensions and locations of cutouts.
3. Indicate requirements for veneer matching.
4. Indicate doors to be factory finished and finish requirements.
5. Indicate fire-protection ratings for fire-rated doors.

C. Samples for Initial Selection: For factory-finished doors.

D. Samples for Verification:

1. Factory finishes applied to actual door face materials, approximately 8 by 10 inches, for each material and finish. For each wood species and transparent finish, provide set of three samples showing typical range of color and grain to be expected in the finished work.
2. Corner sections of doors, approximately 8 by 10 inches, with door faces and edges representing actual materials to be used.

    a. Provide samples for each species of veneer and solid lumber required.

b. Provide samples for each color, texture, and pattern of plastic laminate required.
c. Finish veneer-faced door samples with same materials proposed for factory-finished doors.

3. Louver blade and frame sections, 6 inches long, for each material and finish specified.
4. Frames for light openings, 6 inches long, for each material, type, and finish required.

E. Warranty: Sample of special warranty.

## 1.4 QUALITY ASSURANCE

A. Manufacturer Qualifications: A qualified manufacturer that is certified for chain of custody by an FSC-accredited certification body.

B. Source Limitations: Obtain flush wood doors from single manufacturer.

C. Quality Standard: In addition to requirements specified, comply with AWI's "Architectural Woodwork Quality Standards Illustrated."

1. Provide AWI Quality Certification Labels or an AWI letter of licensing for Project indicating that doors comply with requirements of grades specified.
2. Provide WI-Certified Compliance Certificate indicating that doors comply with requirements of grades specified.
3. Provide WI-Certified Compliance Certificate for installation.

D. Fire-Rated Wood Doors: Doors complying with NFPA 80 that are listed and labeled by a qualified testing agency, for fire-protection ratings indicated, based on testing at positive pressure according to NFPA 252.

1. Temperature-Rise Limit: At vertical exit enclosures and exit passageways, provide doors that have a maximum transmitted temperature end point of not more than 450 deg F above ambient after 30 minutes of standard fire-test exposure.

## 1.5 DELIVERY, STORAGE, AND HANDLING

A. Comply with requirements of referenced standard and manufacturer's written instructions.

B. Package doors individually.

C. Mark each door with opening number used on Shop Drawings.

## 1.6 PROJECT CONDITIONS

A. Environmental Limitations: Do not deliver or install doors until spaces are enclosed and weathertight, wet work in spaces is complete and dry, and HVAC system is operating and maintaining temperature between 60 and 90 deg F and relative humidity between 43 and 70 percent during the remainder of the construction period.

1.7 WARRANTY

A. Special Warranty: Manufacturer's standard form in which manufacturer agrees to repair or replace doors that fail in materials or workmanship within specified warranty period.

1. Failures include, but are not limited to, the following:

a. Warping (bow, cup, or twist) more than 1/4 inch in a 42-by-84-inch section.
b. Telegraphing of core construction in face veneers exceeding 0.01 inch in a 3-inch span.

2. Warranty shall also include installation and finishing that may be required due to repair or replacement of defective doors.
3. Warranty Period for Solid-Core Interior Doors: Life of installation.

PART 2 - PRODUCTS

2.1 MANUFACTURERS

A. Beechwood E.S. and Etna E.S.: Algoma Hardwoods.

B. Kae Avenue E.S.: Mohawk.

2.2 DOOR CONSTRUCTION, GENERAL

A. Certified Wood: Fabricate doors from wood obtained from forests certified by an FSC-accredited certification body to comply with FSC STD-01-001, “FSC Principles and Criteria for Forest Stewardship.”

B. Low-Emitting Materials: Fabricate doors with adhesives and composite wood products that do not contain urea formaldehyde.

C. Low-Emitting Materials: Fabricate doors that comply with the testing and product requirements of the California Department of Health Services’ “Standard Practice for the Testing of Volatile Organic Emissions from Various Sources Using Small-Scale Environmental Chambers.”

D. WDMA I.S.1-A Performance Grade: Extra Heavy Duty.

E. Particleboard-Core Doors:

1. Particleboard: ANSI A208.1, Grade LD-1 , made with binder containing no urea-formaldehyde resin.
2. Particleboard: Straw-based particleboard complying with ANSI A208.1, Grade LD-2 or M-2, except for density.
3. Blocking: Provide wood blocking in particleboard-core doors as needed to eliminate through-bolting hardware. as follows:

a. 5-inch top-rail blocking, in doors indicated to have closers.

b. 5-inch bottom-rail blocking, in exterior doors and doors indicated to have kick, mop, or armor plates.
c. 5-inch midrail blocking, in doors indicated to have exit devices.

4. Provide doors with structural-composite-lumber cores instead of particleboard cores for doors indicated to receive exit devices.

F. Fire-Protection-Rated Doors: Provide core specified or mineral core as needed to provide fire-protection rating indicated.

1. Edge Construction: Provide edge construction with intumescent seals concealed by outer stile. Comply with specified requirements for exposed edges.
2. Pairs: Provide fire-retardant stiles that are listed and labeled for applications indicated without formed-steel edges and astragals. Comply with specified requirements for exposed edges.
3. Pairs: Provide formed-steel edges and astragals.

a. Finish steel edges and astragals with baked enamel.
b. Finish steel edges and astragals to match door hardware (locksets or exit devices).

## 2.3 VENEERED-FACED DOORS FOR TRANSPARENT FINISH

A. Interior Solid-Core Doors:

1. Grade: Premium, with Grade A faces.
2. Species: Red oak, match existing veneer per school.
3. Cut: Rotary cut.
4. Match between Veneer Leaves: Running match.
5. Exposed Vertical and Top Edges: Same species as faces.
6. Core: Particleboard.
7. Construction: Five plies. Stiles and rails are bonded to core, then entire unit abrasive planed before veneering. Faces are bonded to core using a hot press.
8. Construction: Five plies, either bonded or nonbonded construction.
9. WDMA I.S.1-A Performance Grade: Extra Heavy Duty.

## 2.4 FABRICATION

A. Factory fit doors to suit frame-opening sizes indicated. Comply with clearance requirements of referenced quality standard for fitting unless otherwise indicated.

1. Comply with requirements in NFPA 80 for fire-rated doors.

B. Factory machine doors for hardware that is not surface applied. Locate hardware to comply with DHI-WDHS-3. Comply with final hardware schedules, door frame Shop Drawings, DHI A115-W series standards, and hardware templates.

1. Coordinate with hardware mortises in metal frames to verify dimensions and alignment before factory machining.

2. Metal Astragals: Factory machine astragals and formed-steel edges for hardware for pairs of fire-rated doors.

C. Openings: Cut and trim openings through doors in factory.

1. Light Openings: Trim openings with moldings of material and profile indicated.
2. Glazing: Factory install glazing in doors indicated to be factory finished. Comply with applicable requirements in Division 08 Section "Glazing."

## PART 3 - EXECUTION

### 3.1 EXAMINATION

A. Examine doors and installed door frames before hanging doors.

1. Verify that frames comply with indicated requirements for type, size, location, and swing characteristics and have been installed with level heads and plumb jambs.
2. Reject doors with defects.

B. Proceed with installation only after unsatisfactory conditions have been corrected.

### 3.2 INSTALLATION

A. Hardware: For installation, see Division 08 Section "Door Hardware."

B. Installation Instructions: Install doors to comply with manufacturer's written instructions and the referenced quality standard, and as indicated.

1. Install fire-rated doors in corresponding fire-rated frames according to NFPA 80.

C. Job-Fitted Doors: Align and fit doors in frames with uniform clearances and bevels as indicated below; do not trim stiles and rails in excess of limits set by manufacturer or permitted for fire-rated doors. Machine doors for hardware. Seal edges of doors, edges of cutouts, and mortises after fitting and machining.

1. Clearances: Provide 1/8 inch at heads, jambs, and between pairs of doors. Provide 1/8 inch from bottom of door to top of decorative floor finish or covering unless otherwise indicated. Where threshold is shown or scheduled, provide 1/4 inch from bottom of door to top of threshold unless otherwise indicated.

   a. Comply with NFPA 80 for fire-rated doors.

2. Bevel non-fire-rated doors 1/8 inch in 2 inches at lock and hinge edges.
3. Bevel fire-rated doors 1/8 inch in 2 inches at lock edge; trim stiles and rails only to extent permitted by labeling agency.

D. Factory-Fitted Doors: Align in frames for uniform clearance at each edge.

E. Factory-Finished Doors: Restore finish before installation if fitting or machining is required at Project site.

3.3 ADJUSTING

A. Operation: Rehang or replace doors that do not swing or operate freely.

B. Finished Doors: Replace doors that are damaged or that do not comply with requirements. Doors may be repaired or refinished if work complies with requirements and shows no evidence of repair or refinishing.

END OF SECTION 081416

# SECTION 084113 - ALUMINUM-FRAMED ENTRANCES AND STOREFRONTS

## PART 1 - GENERAL

### 1.1 RELATED DOCUMENTS

A. Drawings and general provisions of the Contract, including General and Supplementary Conditions and Division 01 Specification Sections, apply to this Section.

### 1.2 SUMMARY

A. Section Includes:

1. Storefront framing.
2. Storefront framing for window walls.
3. Entrance doors and door-frame units.

B. Related Sections:

1. Division 08 Section "Aluminum Windows”.

### 1.3 DEFINITIONS

A. ADA/ABA Accessibility Guidelines: U.S. Architectural & Transportation Barriers Compliance Board's "Americans with Disability Act (ADA) and Architectural Barriers Act (ABA) Accessibility Guidelines for Buildings and Facilities."

### 1.4 PERFORMANCE REQUIREMENTS

A. General Performance: Aluminum-framed systems shall withstand the effects of the following performance requirements without exceeding performance criteria or failure due to defective manufacture, fabrication, installation, or other defects in construction:

1. Movements of supporting structure indicated on Drawings including, but not limited to, story drift and deflection from uniformly distributed and concentrated live loads.
2. Dimensional tolerances of building frame and other adjacent construction.
3. Failure includes the following:

   a. Deflection exceeding specified limits.
   b. Thermal stresses transferring to building structure.
   c. Framing members transferring stresses, including those caused by thermal and structural movements to glazing.
   d. Glazing-to-glazing contact.
   e. Noise or vibration created by wind and by thermal and structural movements.
   f. Loosening or weakening of fasteners, attachments, and other components.
   g. Sealant failure.

h. Failure of operating units.

B. Delegated Design: Design aluminum-framed systems, including comprehensive engineering analysis by a qualified professional engineer, using performance requirements and design criteria indicated.

C. Structural Loads: As indicated on drawings.

D. Structural-Test Performance: Provide aluminum-framed systems tested according to ASTM E 330 as follows:

1. When tested at positive and negative wind-load design pressures, systems do not evidence deflection exceeding specified limits.
2. When tested at 150] percent of positive and negative wind-load design pressures, systems, including anchorage, do not evidence material failures, structural distress, and permanent deformation of main framing members exceeding 0.2 percent of span.
3. Test Durations: As required by design wind velocity, but not fewer than 10 seconds.

E. Windborne-Debris-Impact-Resistance Performance: Provide aluminum-framed systems that pass missile-impact and cyclic-pressure tests when tested according to ASTM E 1886 and testing information in ASTM E 1996.

1. Large-Missile Impact: For aluminum-framed systems located within 30 feet of grade.
2. Small-Missile Impact: For aluminum-framed systems located more than 30 feet above grade.

F. Story Drift: Provide aluminum-framed systems that accommodate design displacement of adjacent stories indicated.

1. Test Performance: Meet criteria for passing, based on building occupancy type, when tested according to AAMA 501.4 at design displacement and 1.5 times design displacement.

G. Air Infiltration: Provide aluminum-framed systems with maximum air leakage through fixed glazing and framing areas of 0.06 cfm/sq. ft. ] of fixed wall area when tested according to ASTM E 283 at a minimum static-air-pressure difference of 1.57 lbf/sq. ft.

H. Water Penetration under Static Pressure: Provide aluminum-framed systems that do not evidence water penetration through fixed glazing and framing areas when tested according to ASTM E 331 at a minimum static-air-pressure difference of 20 percent of positive wind-load design pressure, but not less than 6.24 lbf/sq. ft.

I. Water Penetration under Dynamic Pressure: Provide aluminum-framed systems that do not evidence water leakage through fixed glazing and framing areas when tested according to AAMA 501.1 under dynamic pressure equal to 20 percent of positive wind-load design pressure, but not less than 6.24 lbf/sq. ft.

J. Thermal Movements: Provide aluminum-framed systems that allow for thermal movements resulting from the following maximum change (range) in ambient and surface temperatures. Base engineering calculation on surface temperatures of materials due to both solar heat gain and nighttime-sky heat loss.

1. Temperature Change (Range): 120 deg F, ambient; 180 deg F, material surfaces.
2. Test Performance: No buckling; stress on glass; sealant failure; excess stress on framing, anchors, and fasteners; or reduction of performance when tested according to AAMA 501.5.

    a. High Exterior Ambient-Air Temperature: That which produces an exterior metal-surface temperature of 180 deg F.
    b. Low Exterior Ambient-Air Temperature: 0 deg F.

3. Interior Ambient-Air Temperature: 75 deg F.

K. Condensation Resistance: Provide aluminum-framed systems with fixed glazing and framing areas having condensation-resistance factor (CRF) of not less than 45 when tested according to AAMA 1503.

L. Thermal Conductance: Provide aluminum-framed systems with fixed glazing and framing areas having an average U-factor of not more than 0.57 Btu/sq. ft. x h x deg F. when tested according to AAMA 1503.

M. Sound Transmission: Provide aluminum-framed systems with fixed glazing and framing areas having the following sound-transmission characteristics:

1. Sound Transmission Class (STC): Minimum 26 STC when tested for laboratory sound transmission loss according to ASTM E 90 and determined by ASTM E 413.
2. Outdoor-Indoor Transmission Class (OITC): Minimum 26 OITC when tested for laboratory sound transmission loss according to ASTM E 90 and determined by ASTM E 1332.

N. Structural Sealant: Capable of withstanding tensile and shear stresses imposed by aluminum-framed systems without failing adhesively or cohesively. When tested for preconstruction adhesion and compatibility, cohesive failure of sealant shall occur before adhesive failure.

1. Adhesive failure occurs when sealant pulls away from substrate cleanly, leaving no sealant material behind.
2. Cohesive failure occurs when sealant breaks or tears within itself but does not separate from each substrate because sealant-to-substrate bond strength exceeds sealant's internal strength.

O. Structural-Sealant Joints: Designed to produce tensile or shear stress of less than 20 psi..

## 1.5 SUBMITTALS

A. Product Data: For each type of product indicated. Include construction details, material descriptions, dimensions of individual components and profiles, and finishes for aluminum-framed systems.

B. Shop Drawings: For aluminum-framed systems. Include plans, elevations, sections, details, and attachments to other work.

1. Include details of provisions for system expansion and contraction and for drainage of moisture in the system to the exterior.
2. For entrance doors, include hardware schedule and indicate operating hardware types, functions, quantities, and locations.

C. Samples for Initial Selection: For units with factory-applied color finishes.

D. Samples for Verification: For each type of exposed finish required, in manufacturer's standard sizes.

E. Fabrication Sample: Of each vertical-to-horizontal intersection of aluminum-framed systems, made from 12-inch lengths of full-size components and showing details of the following:

1. Joinery, including concealed welds.
2. Anchorage.
3. Expansion provisions.
4. Glazing.
5. Flashing and drainage.

F. Other Action Submittals:

1. Entrance Door Hardware Schedule: Prepared by or under the supervision of supplier, detailing fabrication and assembly of entrance door hardware, as well as procedures and diagrams. Coordinate final entrance door hardware schedule with doors, frames, and related work to ensure proper size, thickness, hand, function, and finish of entrance door hardware.

G. Delegated-Design Submittal: For aluminum-framed systems indicated to comply with performance requirements and design criteria, including analysis data signed and sealed by the qualified professional engineer responsible for their preparation.

1. Detail fabrication and assembly of aluminum-framed systems.
2. Include design calculations.

H. Qualification Data: For qualified Installer.

I. Seismic Qualification Certificates: For aluminum-framed systems, accessories, and components, from manufacturer.

1. Basis for Certification: Indicate whether withstand certification is based on actual test of assembled components or on calculation.

J. Welding certificates.

K. Preconstruction Test Reports: For sealant.

L. Product Test Reports: Based on evaluation of comprehensive tests performed by a qualified testing agency, for aluminum-framed systems, indicating compliance with performance requirements.

M. Source quality-control reports.

N. Quality-Control Program for Structural-Sealant-Glazed System: Include reports.

O. Field quality-control reports.

P. Maintenance Data: For aluminum-framed systems to include in maintenance manuals.

Q. Warranties: Sample of special warranties.

## 1.6 QUALITY ASSURANCE

A. Installer Qualifications: Manufacturer's authorized representative who is trained and approved for installation of units required for this Project.

B. Testing Agency Qualifications: Qualified according to ASTM E 699 for testing indicated.

C. Engineering Responsibility: Prepare data for aluminum-framed systems, including Shop Drawings, based on testing and engineering analysis of manufacturer's standard units in systems similar to those indicated for this Project.

D. Quality-Control Program for Structural-Sealant-Glazed System: Develop quality control program specifically for Project. Document quality-control procedures and verify results for aluminum-framed systems. Comply with ASTM C 1401 recommendations including, but not limited to, system material-qualification procedures, preconstruction sealant-testing program, procedures for system fabrication and installation, and intervals of reviews and checks.

E. Product Options: Information on Drawings and in Specifications establishes requirements for systems' aesthetic effects and performance characteristics. Aesthetic effects are indicated by dimensions, arrangements, alignment, and profiles of components and assemblies as they relate to sightlines, to one another, and to adjoining construction. Performance characteristics are indicated by criteria subject to verification by one or more methods including preconstruction testing, field testing, and in-service performance.

1. Do not revise intended aesthetic effects, as judged solely by Architect, except with Architect's approval. If revisions are proposed, submit comprehensive explanatory data to Architect for review.

F. Preconstruction Sealant Testing: For structural-sealant-glazed systems, perform sealant manufacturer's standard tests for compatibility with and adhesion of each material that will come in contact with sealants and each condition required by aluminum-framed systems.

1. Test a minimum five samples each of metal, glazing, and other material.
2. Prepare samples using techniques and primers required for installed systems.
3. For materials that fail tests, determine corrective measures necessary to prepare each material to ensure compatibility with and adhesion of sealants including, but not limited to, specially formulated primers. After performing these corrective measures on the minimum number of samples required for each material, retest materials.

G. Accessible Entrances: Comply with applicable provisions in the U.S. Architectural & Transportation Barriers Compliance Board's ADA-ABA Accessibility Guidelines.

H. Source Limitations for Aluminum-Framed Systems: Obtain from single source from single manufacturer.

I. Structural-Sealant Glazing: Comply with ASTM C 1401, "Guide for Structural Sealant Glazing" for design and installation of structural-sealant-glazed systems.

J. Structural-Sealant Joints: Design reviewed and approved by structural-sealant manufacturer.

K. Welding Qualifications: Qualify procedures and personnel according to AWS D1.2, "Structural Welding Code - Aluminum."

## 1.7 PROJECT CONDITIONS

A. Field Measurements: Verify actual locations of structural supports for aluminum-framed systems by field measurements before fabrication and indicate measurements on Shop Drawings.

## 1.8 WARRANTY

A. Special Warranty: Manufacturer's standard form in which manufacturer agrees to repair or replace components of aluminum-framed systems that do not comply with requirements or that fail in materials or workmanship within specified warranty period.

1. Failures include, but are not limited to, the following:

a. Structural failures including, but not limited to, excessive deflection.
b. Noise or vibration caused by thermal movements.
c. Deterioration of finishes and other materials beyond normal weathering.
d. Adhesive or cohesive sealant failures.
e. Water leakage through fixed glazing and framing areas.
f. Failure of operating components.

2. Warranty Period: 10 years from date of Final Completion.

B. Special Finish Warranty: Manufacturer's standard form in which manufacturer agrees to repair or replace components on which finishes do not comply with requirements or that fail in materials or workmanship within specified warranty period. Warranty does not include normal weathering.

1. Warranty Period: Five years from date of Final Completion.

# PART 2 - PRODUCTS

## 2.1 MANUFACTURERS

A. Door Products:

1. Beechwood E.S. and Etna E.S.: YKK.

a. 20D.

2. Kae Avenue E.S.: Tubelight.

a. 14000 Series, Type DF.

B. Storefront Products

1. Beechwood E.S. and Etna E.S.: YKK

a. AP Series, YES 45 TU.

2. Kae Avenue E.S.: Tubelight.

a. 14650 Series.

## 2.2 MATERIALS

A. Aluminum: Alloy and temper recommended by manufacturer for type of use and finish indicated.

1. Sheet and Plate: ASTM B 209.
2. Extruded Bars, Rods, Profiles, and Tubes: ASTM B 221.
3. Extruded Structural Pipe and Tubes: ASTM B 429.
4. Structural Profiles: ASTM B 308/B 308M.
5. Welding Rods and Bare Electrodes: AWS A5.10/A5.10M.

B. Steel Reinforcement: Manufacturer's standard zinc-rich, corrosion-resistant primer, complying with SSPC-PS Guide No. 12.00; applied immediately after surface preparation and pretreatment. Select surface preparation methods according to recommendations in SSPC-SP COM and prepare surfaces according to applicable SSPC standard.

1. Structural Shapes, Plates, and Bars: ASTM A 36/A 36M.
2. Cold-Rolled Sheet and Strip: ASTM A 1008/A 1008M.
3. Hot-Rolled Sheet and Strip: ASTM A 1011/A 1011M.

## 2.3 FRAMING SYSTEMS

A. Framing Members: Manufacturer's standard extruded-aluminum framing members of thickness required and reinforced as required to support imposed loads.

1. Construction: Thermally broken.
2. Glazing System: Retained mechanically with gaskets on four sides.
3. Glazing Plane: Outside.

B. Brackets and Reinforcements: Manufacturer's standard high-strength aluminum with nonstaining, nonferrous shims for aligning system components.

C. Fasteners and Accessories: Manufacturer's standard corrosion-resistant, nonstaining, nonbleeding fasteners and accessories compatible with adjacent materials.

1. Use self-locking devices where fasteners are subject to loosening or turning out from thermal and structural movements, wind loads, or vibration.
2. Reinforce members as required to receive fastener threads.
3. Use exposed fasteners with countersunk Phillips screw heads, finished to match framing system.

D. Concrete and Masonry Inserts: Hot-dip galvanized cast-iron, malleable-iron, or steel inserts, complying with ASTM A 123/A 123M or ASTM A 153/A 153M.

E. Concealed Flashing: Manufacturer's standard corrosion-resistant, nonstaining, nonbleeding flashing compatible with adjacent materials.

F. Framing System Gaskets and Sealants: Manufacturer's standard, recommended by manufacturer for joint type.

1. Provide sealants for use inside of the weatherproofing system that have a low VOC content of g/L or less when calculated according to 40 CFR 59, Subpart D (EPA Method 24).
2. Sealants used inside the weatherproofing system shall comply with the testing and product requirements of the California Department of Health Services' "Standard Practice for the Testing of Volatile Organic Emissions from Various Sources Using Small-Scale Environmental Chambers."

G. Integral Louver Blinds: Provide remotely operated horizontal louver blinds in the space between two panes of glass. Construct blinds of aluminum scats, approximately 1 inch wide, with polyester fiber cords, equipped for tilting, raising, and lowering by standard operating hardware located on inside face of sash.

## 2.4 GLAZING SYSTEMS

A. Glazing: As specified in Division 08 Section "Glazing."

B. Glazing Gaskets: Manufacturer's standard compression types; replaceable, molded or extruded, of profile and hardness required to maintain watertight seal.

C. Spacers and Setting Blocks: Manufacturer's standard elastomeric type.

D. Bond-Breaker Tape: Manufacturer's standard TFE-fluorocarbon or polyethylene material to which sealants will not develop adhesion.

E. Glazing Sealants: For structural-sealant-glazed systems, as recommended by manufacturer for joint type, and as follows:

1. Structural Sealant: ASTM C 1184, single-component neutral-curing silicone formulation that is compatible with system components with which it comes in contact, specifically formulated and tested for use as structural sealant and approved by a structural-sealant manufacturer for use in aluminum-framed systems indicated.

2. Weatherseal Sealant: ASTM C 920 for Type S, Grade NS, Class 25, Uses NT, G, A, and O; single-component neutral-curing formulation that is compatible with structural sealant

and other system components with which it comes in contact; recommended by structural-sealant, weatherseal-sealant, and aluminum-framed-system manufacturers for this use.

3. Sealants used inside the weatherproofing system shall have a VOC content of 250 g/L or less when calculated according to 40 CFR 59, Subpart D (EPA Method 24).

4. Sealants used inside the weatherproofing system shall comply with the testing and product requirements of the California Department of Health Services' "Standard Practice for the Testing of Volatile Organic Emissions from Various Sources Using Small-Scale Environmental Chambers."

## 2.5 ENTRANCE DOOR SYSTEMS

A. Entrance Doors: Manufacturer's standard glazed entrance doors for manual-swing operation.

1. Door Construction: 1-3/4-inch overall thickness, with minimum 0.125-inch thick, extruded-aluminum tubular rail and stile members. Mechanically fasten corners with reinforcing brackets that are deeply penetrated and fillet welded or that incorporate concealed tie rods.

2. Door Design: Wide stile; 5-inch nominal width.

3. Glazing Stops and Gaskets: snap-on, extruded-aluminum stops and preformed gaskets.

a. Provide nonremovable glazing stops on outside of door.

B. Entrance Door Hardware: As specified in Division 08 Section "Door Hardware."

## 2.6 FABRICATION

A. Form or extrude aluminum shapes before finishing.

B. Weld in concealed locations to greatest extent possible to minimize distortion or discoloration of finish. Remove weld spatter and welding oxides from exposed surfaces by descaling or grinding.

C. Framing Members, General: Fabricate components that, when assembled, have the following characteristics:

1. Profiles that are sharp, straight, and free of defects or deformations.
2. Accurately fitted joints with ends coped or mitered.
3. Means to drain water passing joints, condensation within framing members, and moisture migrating within the system to exterior.
4. Physical and thermal isolation of glazing from framing members.
5. Accommodations for thermal and mechanical movements of glazing and framing to maintain required glazing edge clearances.
6. Provisions for field replacement of glazing from exterior.
7. Fasteners, anchors, and connection devices that are concealed from view to greatest extent possible.

D. Mechanically Glazed Framing Members: Fabricate for flush glazing without projecting stops.

E. Structural-Sealant-Glazed Framing Members: Include accommodations for using temporary support device to retain glazing in place while structural sealant cures.

F. Storefront Framing: Fabricate components for assembly using head-and-sill-receptor system with shear blocks at intermediate horizontal members.

G. Entrance Door Frames: Reinforce as required to support loads imposed by door operation and for installing entrance door hardware.

1. At exterior doors, provide compression weather stripping at fixed stops.

H. Entrance Doors: Reinforce doors as required for installing entrance door hardware.

1. At pairs of exterior doors, provide sliding-type weather stripping retained in adjustable strip and mortised into door edge.
2. At exterior doors, provide weather sweeps applied to door bottoms.

I. Entrance Door Hardware Installation: Factory install entrance door hardware to the greatest extent possible. Cut, drill, and tap for factory-installed entrance door hardware before applying finishes.

J. After fabrication, clearly mark components to identify their locations in Project according to Shop Drawings.

## 2.7 ALUMINUM FINISHES

A. Clear Anodic Finish: AAMA 611, AA-M12C22A41, Class I, 0.018 mm or thicker.

## 2.8 SOURCE QUALITY CONTROL

A. Testing Agency: Owner will engage a qualified testing agency to evaluate structural-sealant-glazed systems.

B. Structural-Sealant-Glazed Systems: Perform quality-control procedures complying with ASTM C 1401 recommendations, including, but not limited to, system material-qualification procedures, sealant testing, and system fabrication reviews and checks.

C. Structural-sealant-glazed system will be considered defective if it does not pass tests and inspections.

D. Prepare test and inspection reports.

# PART 3 - EXECUTION

## 3.1 EXAMINATION

A. Examine areas and conditions, with Installer present, for compliance with requirements for installation tolerances and other conditions affecting performance of the Work.

B. Proceed with installation only after unsatisfactory conditions have been corrected.

## 3.2 INSTALLATION

A. General:

1. Comply with manufacturer's written instructions.
2. Do not install damaged components.
3. Fit joints to produce hairline joints free of burrs and distortion.
4. Rigidly secure nonmovement joints.
5. Install anchors with separators and isolators to prevent metal corrosion and electrolytic deterioration.
6. Seal joints watertight unless otherwise indicated.

B. Metal Protection:

1. Where aluminum will contact dissimilar metals, protect against galvanic action by painting contact surfaces with primer or applying sealant or tape, or by installing nonconductive spacers as recommended by manufacturer for this purpose.
2. Where aluminum will contact concrete or masonry, protect against corrosion by painting contact surfaces with bituminous paint.

C. Install components to drain water passing joints, condensation occurring within framing members, and moisture migrating within the system to exterior.

D. Set continuous sill members and flashing in full sealant bed as specified in Division 07 Section "Joint Sealants" to produce weathertight installation.

E. Install components plumb and true in alignment with established lines and grades, and without warp or rack.

F. Install glazing as specified in Division 08 Section "Glazing."

1. Structural-Sealant Glazing:

a. Prepare surfaces that will contact structural sealant according to sealant manufacturer's written instructions to ensure compatibility and adhesion. Preparation includes, but is not limited to, cleaning and priming surfaces.
b. Install weatherseal sealant according to Division 07 Section "Joint Sealants" and according to sealant manufacturer's written instructions to produce weatherproof joints. Install joint filler behind sealant as recommended by sealant manufacturer.

G. Entrance Doors: Install doors to produce smooth operation and tight fit at contact points.

1. Exterior Doors: Install to produce weathertight enclosure and tight fit at weather stripping.
2. Field-Installed Entrance Door Hardware: Install surface-mounted entrance door hardware according to entrance door hardware manufacturers' written instructions using concealed fasteners to greatest extent possible.

H. Install perimeter joint sealants as specified in Division 07 Section "Joint Sealants" to produce weathertight installation.

## 3.3 ERECTION TOLERANCES

A. Install aluminum-framed systems to comply with the following maximum erection tolerances:

1. Location and Plane: Limit variation from true location and plane to 1/8 inch in 12 feet ; 1/4 inch over total length.
2. Alignment:

   a. Where surfaces abut in line, limit offset from true alignment to 1/16 inch.
   b. Where surfaces meet at corners, limit offset from true alignment to 1/32 inch.

B. Diagonal Measurements: Limit difference between diagonal measurements to 1/8 inch.

## 3.4 FIELD QUALITY CONTROL

A. Testing Agency: Owner will engage a qualified independent testing and inspecting agency to perform field tests and inspections.

B. Testing Services: Testing and inspecting of representative areas to determine compliance of installed systems with specified requirements shall take place as follows and in successive phases as indicated on Drawings. Do not proceed with installation of the next area until test results for previously completed areas show compliance with requirements.

1. Structural-Sealant Compatibility and Adhesion: Structural sealant shall be tested according to recommendations in ASTM C 1401.

   a. Destructive Test Method A, "Hand Pull Tab (Destructive)," in ASTM C 1401, Appendix X2, shall be used.

      1) A minimum of two areas on each building face shall be tested.
      2) Repair installation areas damaged by testing.

2. Structural-Sealant Glazing Inspection: After installation of aluminum-framed systems is complete, structural-sealant glazing shall be inspected and evaluated according to recommendations in ASTM C 1401.

C. Repair or remove work if test results and inspections indicate that it does not comply with specified requirements.

D. Additional testing and inspecting, at Contractor's expense, will be performed to determine compliance of replaced or additional work with specified requirements.

E. Aluminum-framed assemblies will be considered defective if they do not pass tests and inspections.

F. Prepare test and inspection reports.

3.5 ADJUSTING

A. Adjust operating entrance door hardware to function smoothly as recommended by manufacturer.

1. For entrance doors accessible to people with disabilities, adjust closers to provide a 3-second closer sweep period for doors to move from a 70-degree open position to 3 inches from the latch, measured to the leading door edge.

END OF SECTION 084113

# SECTION 084413 - GLAZED ALUMINUM CURTAIN WALLS

## PART 1 - GENERAL

### 1.1 RELATED DOCUMENTS

A. Drawings and general provisions of the Contract, including General and Supplementary Conditions and Division 01 Specification Sections, apply to this Section.

### 1.2 SUMMARY

A. Section includes conventionally glazed aluminum curtain walls.

B. If structural sealant is used to adhere glazing in small areas of an assembly such as outside edge of glazing at building corners, consider inserting requirements in this Section using Division 08 Section "Structural-Sealant-Glazed Curtain Walls" as a guide.

C. Related Sections:

1. Division 07 Section "Joint Sealants" for installation of joint sealants installed with glazed aluminum curtain walls.

### 1.3 PERFORMANCE REQUIREMENTS

A. General Performance: Comply with performance requirements specified, as determined by testing of glazed aluminum curtain walls representing those indicated for this Project without failure due to defective manufacture, fabrication, installation, or other defects in construction.

1. Glazed aluminum curtain walls shall withstand movements of supporting structure indicated on Drawings including, but not limited to, story drift, twist, column shortening, long-term creep, and deflection from uniformly distributed and concentrated live loads.
2. Failure also includes the following:

a. Thermal stresses transferring to building structure.
b. Glass breakage.
c. Noise or vibration created by wind and thermal and structural movements.
d. Loosening or weakening of fasteners, attachments, and other components.
e. Failure of operating units.

B. Delegated Design: Design glazed aluminum curtain walls, including comprehensive engineering analysis by a qualified professional engineer, using performance requirements and design criteria indicated.

C. Structural Loads: As indicated on Drawings.

D. Structural-Test Performance: Test according to ASTM E 330 as follows:

1. When tested at positive and negative wind-load design pressures, assemblies do not evidence deflection exceeding specified limits.
2. When tested at 150 percent of positive and negative wind-load design pressures, assemblies, including anchorage, do not evidence material failures, structural distress, and permanent deformation of main framing members exceeding 0.2 percent of span.
3. Test Durations: As required by design wind velocity, but not less than 10 seconds.

E. Windborne-Debris-Impact-Resistance Performance: Pass missile-impact and cyclic-pressure tests when tested according to ASTM E 1886 and testing information in ASTM E 1996 for Wind.

1. Large-Missile Test: For glazed openings located within 30 feet of grade.

F. Seismic Performance: Glazed aluminum curtain walls shall withstand the effects of earthquake motions determined according to SEI/ASCE 7.

1. Component Importance Factor is 1.5.

G. Story Drift: Accommodate design displacement of adjacent stories indicated.

1. Test Performance: Meeting criteria for passing based on building occupancy type when tested according to AAMA 501.4 at design displacement and 1.5 times the design displacement.

H. Water Penetration under Static Pressure: No evidence of water penetration through fixed glazing and framing areas when tested according to ASTM E 331 at a minimum static-air-pressure differential of 20 percent of positive wind-load design pressure, but not less than 6.24 lbf/sq. ft..

I. Water Penetration under Dynamic Pressure: No evidence of water penetration through fixed glazing and framing areas when tested according to AAMA 501.1 at dynamic pressure equal to 20 percent of positive wind-load design pressure, but not less than 6.24 lbf/sq. ft..

1. Maximum Water Leakage: According to AAMA 501.1. Water leakage does not include water controlled by flashing and gutters that is drained to exterior.

J. Thermal Movements: Allow for thermal movements resulting from the following maximum change (range) in ambient and surface temperatures:

1. Temperature Change (Range): 120 deg F, ambient; 180 deg F, material surfaces.
2. Test Interior Ambient-Air Temperature: 75 deg F.
3. Test Performance: No buckling; stress on glass; sealant failure; excess stress on framing, anchors, and fasteners; or reduction of performance when tested according to AAMA 501.5.

K. Energy Performance: Glazed aluminum curtain walls shall have certified and labeled energy performance ratings in accordance with NFRC.

1. Thermal Transmittance (U-factor): Fixed glazing and framing areas shall have U-factor of not more than 0.57 Btu/sq. ft. x h x deg F. as determined according to NFRC 100.

2. Solar Heat Gain Coefficient: Fixed glazing and framing areas shall have a solar heat gain coefficient of no greater than 0.35 as determined according to NFRC 200.
3. Air Infiltration: Maximum air leakage through fixed glazing and framing areas of 0.30 cfm/sq. ft. of fixed wall area as determined according to ASTM E 283 at a minimum static-air-pressure differential of 1.57 lbf/sq. ft..
4. Condensation Resistance: Fixed glazing and framing areas shall have an NFRC- certified condensation resistance rating of no less than 15 as determined according to NFRC 500.

L. Sound Transmission: Provide glazed aluminum curtain walls with fixed glazing and framing areas having the following sound-transmission characteristics:

1. Outdoor-Indoor Transmission Class: Minimum 26 when tested for laboratory sound transmission loss according to ASTM E 90 and determined by ASTM E 1332.

## 1.4 SUBMITTALS

A. Product Data: For each type of product indicated. Include construction details, material descriptions, dimensions of individual components and profiles, and finishes.

B. Shop Drawings: For glazed aluminum curtain walls. Include plans, elevations, sections, full-size details, and attachments to other work.

1. Include details of provisions for assembly expansion and contraction and for draining moisture occurring within the assembly to the exterior.
2. Include full-size isometric details of each vertical-to-horizontal intersection of glazed aluminum curtain walls, showing the following:

   a. Joinery, including concealed welds.
   b. Anchorage.
   c. Expansion provisions.
   d. Glazing.
   e. Flashing and drainage.

3. Include laboratory mockup Shop Drawings, prepared by a qualified preconstruction testing agency, showing details of laboratory mockup.

   a. Resubmit Shop Drawings with changes made to glazed aluminum curtain walls to successfully complete preconstruction testing.

C. Samples for Initial Selection: For units with factory-applied color finishes.

D. Samples for Verification: For each type of exposed finish required, in manufacturer's standard sizes.

E. Fabrication Sample: Of each vertical-to-horizontal intersection of assemblies, made from 12-inch lengths of full-size components and showing details of the following:

1. Joinery, including concealed welds.
2. Anchorage.
3. Expansion provisions.

4. Glazing.
5. Flashing and drainage.

F. Delegated-Design Submittal: For glazed aluminum curtain walls indicated to comply with performance requirements and design criteria, including analysis data signed and sealed by the qualified professional engineer responsible for their preparation.

## 1.5 INFORMATIONAL SUBMITTALS

A. Qualification Data: For qualified Installer.

B. Seismic Qualification Certificates: For glazed aluminum curtain walls, accessories, and components.

1. Basis for Certification: Indicate whether withstand certification is based on actual test of assembled components or on calculation.

C. Welding certificates.

D. Energy Performance Certificates: For glazed aluminum curtain walls, accessories, and components, from manufacturer.

1. Basis for Certification: NFRC-certified energy performance values for each glazed aluminum curtain wall.

E. Product Test Reports: Based on evaluation of comprehensive tests performed by a qualified preconstruction testing agency, for glazed aluminum curtain walls, indicating compliance with performance requirements.

F. Field quality-control reports.

G. Maintenance Data: For glazed aluminum curtain walls to include in maintenance manuals.

H. Warranties: Sample of special warranties.

## 1.6 QUALITY ASSURANCE

A. Manufacturer Qualifications: A manufacturer capable of fabricating glazed aluminum curtain walls that meet or exceed energy performance requirements indicated and of documenting this performance by certification, labeling, and inclusion in lists.

B. Installer Qualifications: Manufacturer's authorized representative who is trained and approved for installation of units required for this Project.

C. Preconstruction Testing Agency Qualifications: Qualified according to ISO/IEC 17025 and accredited by ICC-ES for preconstruction testing indicated.

D. Testing Agency Qualifications: Qualified according to ASTM E 699 for testing indicated.

E. Product Options: Information on Drawings and in Specifications establishes requirements for aesthetic effects and performance characteristics of assemblies. Aesthetic effects are indicated by dimensions, arrangements, alignment, and profiles of components and assemblies as they relate to sightlines, to one another, and to adjoining construction.

1. Do not revise intended aesthetic effects, as judged solely by Architect, except with Architect's approval. If revisions are proposed, submit comprehensive explanatory data to Architect for review.

F. Welding Qualifications: Qualify procedures and personnel according to the following:

1. AWS D1.1/D1.1M, "Structural Welding Code - Steel."
2. AWS D1.2/D1.2M, "Structural Welding Code - Aluminum."

G. Energy Performance Standards: Comply with NFRC for minimum standards of energy performance, materials, components, accessories, and fabrication. Comply with more stringent requirements if indicated.

1. Provide NFRC-certified glazed aluminum curtain walls with an attached label.

## 1.7 PROJECT CONDITIONS

A. Field Measurements: Verify actual locations of structural supports for glazed aluminum curtain walls by field measurements before fabrication and indicate measurements on Shop Drawings.

## 1.8 WARRANTY

A. Special Assembly Warranty: Standard form in which manufacturer agrees to repair or replace components of glazed aluminum curtain walls that do not comply with requirements or that fail in materials or workmanship within specified warranty period.

1. Failures include, but are not limited to, the following:

a. Structural failures including, but not limited to, excessive deflection.
b. Noise or vibration created by wind and thermal and structural movements.
c. Deterioration of metals, metal finishes, and other materials beyond normal weathering.
d. Water penetration through fixed glazing and framing areas.
e. Failure of operating components.

2. Warranty Period: 10 years from date of Final Completion.

B. Special Finish Warranty: Manufacturer's standard form in which manufacturer agrees to repair or replace components on which finishes do not comply with requirements or that fail in materials or workmanship within specified warranty period. Warranty does not include normal weathering.

1. Warranty Period: Five years from date of Final Completion.

## PART 2 - PRODUCTS

### 2.1 MANUFACTURERS

A. Products:

1. Beechwood E.S.: YKK

   a. YCW 750 OG.

2. Kae Avenue E.S.: Tubelight

   a. 200 Series.

### 2.2 MATERIALS

A. Aluminum: Alloy and temper recommended by manufacturer for type of use and finish indicated.

1. Sheet and Plate: ASTM B 209.
2. Extruded Bars, Rods, Profiles, and Tubes: ASTM B 221.
3. Extruded Structural Pipe and Tubes: ASTM B 429.
4. Structural Profiles: ASTM B 308/B 308M.
5. Welding Rods and Bare Electrodes: AWS A5.10/A5.10M.

B. Steel Reinforcement: Manufacturer's standard zinc-rich, corrosion-resistant primer complying with SSPC-PS Guide No. 12.00; applied immediately after surface preparation and pretreatment. Select surface preparation methods according to recommendations in SSPC-SP COM and prepare surfaces according to applicable SSPC standard.

1. Structural Shapes, Plates, and Bars: ASTM A 36/A 36M.
2. Cold-Rolled Sheet and Strip: ASTM A 1008/A 1008M.
3. Hot-Rolled Sheet and Strip: ASTM A 1011/A 1011M.

### 2.3 FRAMING

A. Framing Members: Manufacturer's standard extruded- or formed-aluminum framing members of thickness required and reinforced as required to support imposed loads.

1. Construction: Thermally improved.
2. Glazing System: Retained mechanically with gaskets on four sides.
3. Glazing Plane: Front.

B. Brackets and Reinforcements: Manufacturer's standard high-strength aluminum with nonstaining, nonferrous shims for aligning system components.

C. Fasteners and Accessories: Manufacturer's standard corrosion-resistant, nonstaining, nonbleeding fasteners and accessories compatible with adjacent materials.

1. Use self-locking devices where fasteners are subject to loosening or turning out from thermal and structural movements, wind loads, or vibration.
2. Reinforce members as required to receive fastener threads.
3. Use exposed fasteners with countersunk Phillips screw heads.

D. Anchors: Three-way adjustable anchors with minimum adjustment of 1 inch that accommodate fabrication and installation tolerances in material and finish compatible with adjoining materials and recommended by manufacturer.

1. Concrete and Masonry Inserts: Hot-dip galvanized cast-iron, malleable-iron, or steel inserts complying with ASTM A 123/A 123M or ASTM A 153/A 153M requirements.

E. Concealed Flashing: Manufacturer's standard corrosion-resistant, nonstaining, nonbleeding flashing compatible with adjacent materials.

F. Framing Sealants: Manufacturer's standard sealants.

## 2.4 GLAZING

A. Glazing: Comply with Division 08 Section "Glazing."

B. Glazing Gaskets: Comply with Division 08 Section "Glazing."

C. Glazing Sealants: Comply with Division 08 Section "Glazing."

1. Provide sealants for use inside of the weatherproofing system that have a low VOC content of g/L or less when calculated according to 40 CFR 59, Subpart D (EPA Method 24).

## 2.5 INSULATED SPANDREL PANELS

A. Insulated Spandrel Panels: Laminated, metal-faced flat panels with no deviations in plane exceeding 0.8 percent of panel dimension in width or length.

1. Thermal Insulation Core: Manufacturer's standard rigid, closed-cell, polyisocyanurate board.
2. Surface-Burning Characteristics: For exposed interior surfaces of panels, when tested according to ASTM E 84 as follows:

a. Flame-Spread Index: 25 or less.
b. Smoke-Developed Index: 450 or less.

## 2.6 FABRICATION

A. Form or extrude aluminum shapes before finishing.

B. Weld in concealed locations to greatest extent possible to minimize distortion or discoloration of finish. Remove weld spatter and welding oxides from exposed surfaces by descaling or grinding.

C. Fabricate components that, when assembled, have the following characteristics:

1. Profiles that are sharp, straight, and free of defects or deformations.
2. Accurately fitted joints with ends coped or mitered.
3. Physical and thermal isolation of glazing from framing members.
4. Accommodations for thermal and mechanical movements of glazing and framing to maintain required glazing edge clearances.
5. Provisions for field replacement of glazing.
6. Provisions for safety railings.
7. Fasteners, anchors, and connection devices that are concealed from view to greatest extent possible.
8. Components curved to indicated radii.

D. Fabricate components that, when assembled, have the following characteristics:

1. Internal guttering system or other means to drain water passing joints, condensation occurring within framing members, and moisture migrating within glazed aluminum curtain wall to exterior.
2. Pressure-equalized system or double barrier design with primary air and vapor barrier at interior side of glazed aluminum curtain wall and secondary seal weeped and vented to exterior.

E. Factory-Assembled Frame Units:

1. Rigidly secure nonmovement joints.
2. Seal joints watertight unless otherwise indicated.
3. Install glazing to comply with requirements in Division 08 Section "Glazing."

F. After fabrication, clearly mark components to identify their locations in Project according to Shop Drawings.

## 2.7 ALUMINUM FINISHES

A. Clear Anodic Finish: AAMA 611, AA-M12C22A41, Class I, 0.018 mm or thicker.

# PART 3 - EXECUTION

## 3.1 EXAMINATION

A. Examine areas, with Installer present, for compliance with requirements for installation tolerances and other conditions affecting performance of the Work.

B. Proceed with installation only after unsatisfactory conditions have been corrected.

## 3.2 INSTALLATION

A. General:

1. Comply with manufacturer's written instructions.
2. Do not install damaged components.
3. Fit joints to produce hairline joints free of burrs and distortion.
4. Rigidly secure nonmovement joints.
5. Install anchors with separators and isolators to prevent metal corrosion and electrolytic deterioration and to prevent impeding movement of moving joints.
6. Weld components in concealed locations to minimize distortion or discoloration of finish. Protect glazing surfaces from welding.
7. Seal joints watertight unless otherwise indicated.

B. Metal Protection:

1. Where aluminum will contact dissimilar metals, protect against galvanic action by painting contact surfaces with primer or by applying sealant or tape or installing nonconductive spacers as recommended by manufacturer for this purpose.
2. Where aluminum will contact concrete or masonry, protect against corrosion by painting contact surfaces with bituminous paint.

C. Install components to drain water passing joints, condensation occurring within framing members, and moisture migrating within glazed aluminum curtain wall to exterior.

D. Install components plumb and true in alignment with established lines and grades.

E. Install operable units level and plumb, securely anchored, and without distortion. Adjust weather-stripping contact and hardware movement to produce proper operation.

## 3.3 ERECTION TOLERANCES

A. Erection Tolerances: Install glazed aluminum curtain walls to comply with the following maximum tolerances:

1. Plumb: 1/8 inch in 10 feet; 1/4 inch in 40 feet.
2. Level: 1/8 inch in 20 feet; 1/4 inch in 40 feet.
3. Alignment:

   a. Where surfaces abut in line or are separated by reveal or protruding element up to 1/2 inch wide, limit offset from true alignment to 1/16 inch.
   b. Where surfaces are separated by reveal or protruding element from 1/2 to 1 inch wide, limit offset from true alignment to 1/8 inch.
   c. Where surfaces are separated by reveal or protruding element of 1 inch wide or more, limit offset from true alignment to 1/4 inch.

4. Location: Limit variation from plane to 1/8 inch in 12 feet; 1/2 inch over total length.

## 3.4 FIELD QUALITY CONTROL

A. Testing Agency: Owner will engage a qualified testing agency to perform tests and inspections.

B. Testing Services: Testing and inspecting of representative areas of glazed aluminum curtain walls shall take place as installation proceeds to determine compliance of installed assemblies with specified requirements.

1. Water Spray Test: Before installation of interior finishes has begun, areas designated by Architect shall be tested according to AAMA 501.2 and shall not evidence water penetration.

C. Glazed aluminum curtain walls will be considered defective if they do not pass tests and inspections.
D. Prepare test and inspection reports.

END OF SECTION 084413

# SECTION 085113 - ALUMINUM WINDOWS

## PART 1 - GENERAL

### 1.1 RELATED DOCUMENTS

A. Drawings and general provisions of the Contract, including General and Supplementary Conditions and Division 01 Specification Sections, apply to this Section.

### 1.2 SUMMARY

A. This Section includes aluminum-framed windows for exterior locations.

B. Related Sections include the following:

1. Division 08 Section "Aluminum-Framed Entrances and Storefronts" for coordinating finish among aluminum fenestration units.
2. Division 08 Section "Glazed Aluminum Curtain Walls" for incorporating aluminum windows into glazed curtain walls and for coordinating finish among aluminum fenestration units.

### 1.3 DEFINITIONS

A. Performance class designations according to AAMA/WDMA 101/I.S.2/NAFS:

1. AW Architectural.

B. Performance grade number according to AAMA/WDMA 101/I.S.2/NAFS:

1. Not less than 60.

C. Structural Test Pressure: For uniform load structural test, is equivalent to 150 percent of the design pressure.

D. Minimum Test Size: Smallest size permitted for performance class. Products must be tested at minimum test size or at a size larger than minimum test size to comply with requirements for performance class.

### 1.4 PERFORMANCE REQUIREMENTS

A. General: Provide aluminum windows capable of complying with performance requirements indicated, based on testing manufacturer's windows that are representative of those specified, and that are of minimum test size indicated below:

1. Size required by AAMA/WDMA 101/I.S.2/NAFS.
2. Size indicated on Drawings.

B. Structural Performance: Provide aluminum windows capable of withstanding the effects of the following loads, based on testing units representative of those indicated for Project that pass AAMA/WDMA 101/I.S.2/NAFS, Uniform Load Structural Test:

1. Design Wind Loads: Determine design wind loads applicable to Project from basic wind speed indicated in miles per hour at 33 feet above grade, according to ASCE 7, Section 6.5, "Method 2-Analytical Procedure," based on mean roof heights above grade indicated on Drawings.
2. Deflection: Design glass framing system to limit lateral deflections of glass edges to less than 1/175 of glass-edge length or 3/4 inch, whichever is less, at design pressure based on testing performed according to AAMA/WDMA 101/I.S.2/NAFS, Uniform Load Deflection Test or structural computations.

C. Windborne-Debris Resistance: Provide glazed windows capable of resisting impact from windborne debris, based on the pass/fail criteria as determined from testing glazed windows identical to those specified, according to ASTM E 1886 and testing information in ASTM E 1996 and requirements of authorities having jurisdiction.

D. Thermal Movements: Provide aluminum windows, including anchorage, that allow for thermal movements resulting from the following maximum change (range) in ambient and surface temperatures by preventing buckling, opening of joints, overstressing of components, failure of joint sealants, failure of connections, and other detrimental effects. Base engineering calculation on surface temperatures of materials due to both solar heat gain and nighttime-sky heat loss.

1. Temperature Change (Range): 120 deg F.; 180 deg F. material surfaces.

## 1.5 SUBMITTALS

A. Product Data: Include construction details, material descriptions, fabrication methods, dimensions of individual components and profiles, hardware, finishes, and operating instructions for each type of aluminum window indicated.

B. Shop Drawings: Include plans, elevations, sections, details, hardware, attachments to other work, operational clearances, installation details, and the following:

1. Mullion details, including reinforcement and stiffeners.
2. Joinery details.
3. Expansion provisions.
4. Flashing and drainage details.
5. Weather-stripping details.
6. Thermal-break details.
7. Glazing details.
8. Window cleaning provisions.
9. For installed products indicated to comply with design loads, include structural analysis data prepared by or under the supervision of a qualified professional engineer detailing fabrication and assembly of aluminum windows and used to determine the following:

   a. Structural test pressures and design pressures from wind loads indicated.
   b. Deflection limitations of glass framing systems.

C. Samples for Initial Selection: For units with factory-applied color finishes.

1. Include similar Samples of hardware and accessories involving color selection.

D. Samples for Verification: For aluminum windows and components required, prepared on Samples of size indicated below.

1. Main Framing Member: 12-inch- long, full-size sections of extrusions with factory-applied color finish.
2. Window Corner Fabrication: 12-by-12-inch- long, full-size window corner including full-size sections of extrusions with factory-applied color finish, weather stripping, and glazing.
3. Operable Window: Full-size unit with factory-applied finish.
4. Hardware: Full-size units with factory-applied finishes.
5. Weather Stripping: 12-inch- long sections.

E. Product Schedule: For aluminum windows. Use same designations indicated on Drawings.

F. Qualification Data: For manufacturer.

G. Field quality-control test reports.

H. Product Test Reports: Based on evaluation of comprehensive tests performedby a qualified testing agency for each type, class, grade, and size of aluminum window. Test results based on use of downsized test units will not be accepted.

I. Maintenance Data: For finishes to include in maintenance manuals.

J. Warranty: Special warranty specified in this Section.

## 1.6 QUALITY ASSURANCE

A. Installer Qualifications: An installer acceptable to aluminum window manufacturer for installation of units required for this Project.

1. Installer's responsibilities include providing professional engineering services needed to assume engineering responsibility.
2. Engineering Responsibility: Preparation of data for aluminum windows, including Shop Drawings, based on testing and engineering analysis of manufacturer's standard units in assemblies similar to those indicated for this Project.

B. Manufacturer Qualifications: A manufacturer capable of fabricating aluminum windows that meet or exceed performance requirements indicated and of documenting this performance by inclusion in lists and by labels, test reports, and calculations.

C. Source Limitations: Obtain aluminum windows through one source from a single manufacturer.

D. Product Options: Information on Drawings and in Specifications establishes requirements for aluminum windows' aesthetic effects and performance characteristics. Aesthetic effects are indicated by dimensions, arrangements, alignment, and profiles of components and assemblies as they relate to sightlines, to one another, and to adjoining construction. Performance

characteristics are indicated by criteria subject to verification by one or more methods including preconstruction testing, field testing, and in-service performance.

E. Product Options: Drawings indicate size, profiles, and dimensional requirements of aluminum windows and are based on the specific system indicated. Refer to Division 01 Section "Product Requirements." Do not modify size and dimensional requirements.

1. Do not modify intended aesthetic effects, as judged solely by Architect, except with Architect's approval. If modifications are proposed, submit comprehensive explanatory data to Architect for review.

F. Fenestration Standard: Comply with AAMA/WDMA 101/I.S.2/NAFS, "North American Fenestration Standard Voluntary Performance Specification for Windows, Skylights and Glass Doors," for definitions and minimum standards of performance, materials, components, accessories, and fabrication. Comply with more stringent requirements if indicated.

1. Provide AAMA-certified aluminum windows with an attached label.

G. Glazing Publications: Comply with published recommendations of glass manufacturers and with GANA's "Glazing Manual" unless more stringent requirements are indicated.

## 1.7 PROJECT CONDITIONS

A. Field Measurements: Verify aluminum window openings by field measurements before fabrication and indicate measurements on Shop Drawings.

1. Established Dimensions: Where field measurements cannot be made without delaying the Work, establish opening dimensions and proceed with fabricating aluminum windows without field measurements. Coordinate wall construction to ensure that actual opening dimensions correspond to established dimensions.

## 1.8 WARRANTY

A. Special Warranty: Manufacturer's standard form in which manufacturer agrees to repair or replace aluminum windows that fail in materials or workmanship within specified warranty period.

1. Failures include, but are not limited to, the following:

a. Failure to meet performance requirements.
b. Structural failures including excessive deflection, water leakage, air infiltration, or condensation.
c. Faulty operation of movable sash and hardware.
d. Deterioration of metals, other materials, and metal finishes beyond normal weathering.
e. Failure of insulating glass.

2. Warranty Period:

a. Window: Three years from date of Final Completion.

b. Glazing: 10 years from date of Final Completion.

B. Special Finish Warranty: Manufacturer's standard form in which manufacturer agrees to repair or replace components on which finishes do not comply with requirements or that fail in materials or workmanship within specified warranty period. Warranty does not include normal weathering.

1. Warranty Period: Five years from date of Final Completion.

PART 2 - PRODUCTS

2.1 MANUFACTURERS

A. Products:

1. Beechwood E.S. and Etna E.S.: Moduline

a. 30P, Zero Sightline Series w/integral blinds.

2. Kae Avenue E.S.: EFCO

a. 2-7/16” Heavy Commercial, Shadowline.

2.2 MATERIALS

A. Aluminum Extrusions: Alloy and temper recommended by aluminum window manufacturer for strength, corrosion resistance, and application of required finish, but not less than 22,000-psi ultimate tensile strength, not less than 16,000-psi minimum yield strength, and not less than 0.062-inch thickness at any location for the main frame and sash members.

B. Fasteners: Aluminum, nonmagnetic stainless steel, epoxy adhesive, or other materials warranted by manufacturer to be noncorrosive and compatible with aluminum window members, trim, hardware, anchors, and other components.

1. Reinforcement: Where fasteners screw anchor into aluminum less than 0.125 inch thick, reinforce interior with aluminum or nonmagnetic stainless steel to receive screw threads, or provide standard, noncorrosive, pressed-in, splined grommet nuts.
2. Exposed Fasteners: Unless unavoidable for applying hardware, do not use exposed fasteners. For application of hardware, use fasteners that match finish of member or hardware being fastened, as appropriate.

C. Anchors, Clips, and Accessories: Aluminum, nonmagnetic stainless steel, or zinc-coated steel or iron complying with ASTM B 633 for SC 3 severe service conditions; provide sufficient strength to withstand design pressure indicated.

D. Reinforcing Members: Aluminum, nonmagnetic stainless steel, or nickel/chrome-plated steel complying with ASTM B 456 for Type SC 3 severe service conditions, or zinc-coated steel or iron complying with ASTM B 633 for SC 3 severe service conditions; provide sufficient strength to withstand design pressure indicated.

E. Compression-Type Weather Stripping: Provide compressible weather stripping designed for permanently resilient sealing under bumper or wiper action and for complete concealment when aluminum window is closed.

1. Weather-Stripping Material: Elastomeric cellular preformed gaskets complying with ASTM C 509.
2. Weather-Stripping Material: Dense elastomeric gaskets complying with ASTM C 864.
3. Weather-Stripping Material: Manufacturer's standard system and materials complying with AAMA/WDMA 101/I.S.2/NAFS.

F. Sliding-Type Weather Stripping: Provide woven-pile weather stripping of wool, polypropylene, or nylon pile and resin-impregnated backing fabric. Comply with AAMA 701/702.

1. Weather Seals: Provide weather stripping with integral barrier fin or fins of semirigid, polypropylene sheet or polypropylene-coated material. Comply with AAMA 701/702.

G. Replaceable Weather Seals: Comply with AAMA 701/702.

H. Sealant: For sealants required within fabricated windows, provide window manufacturer's standard, permanently elastic, nonshrinking, and nonmigrating type recommended by sealant manufacturer for joint size and movement.

## 2.3 WINDOW

A. Class and grade rating; AW60.

B. AAMA/WDMA Performance Requirements: Provide aluminum windows of performance indicated that comply with AAMA/WDMA 101/I.S.2/NAFS.

C. Condensation-Resistance Factor (CRF): Provide aluminum windows tested for thermal performance according to AAMA 1503, showing a CRF of 45.

D. Thermal Transmittance: Provide aluminum windows with a whole-window, U-factor maximum indicated at 15-mph exterior wind velocity and winter condition temperatures when tested according to AAMA 1503.

1. U-Factor: 0.60 Btu/sq. ft. x h x deg F or less.

E. Solar Heat-Gain Coefficient (SHGC): Provide aluminum windows with a whole-window SHGC maximum of 0.40, determined according to NFRC 200 procedures.

F. Sound Transmission Class (STC): Provide glazed windows rated for not less than 26 STC when tested for laboratory sound transmission loss according to ASTM E 90 and determined by ASTM E 413.

G. Air Infiltration: Maximum rate not more than indicated when tested according to AAMA/WDMA 101/I.S.2/NAFS, Air Infiltration Test.

1. Maximum Rate: 0.3 cfm/sq.ft. of area at an inward test pressure of 6.24 lbf/sq.ft.

H. Water Resistance: No water leakage as defined in AAMA/WDMA referenced test methods at a water test pressure equaling that indicated, when tested according to AAMA/WDMA 101/I.S.2/NAFS, Water Resistance Test.

1. Test Pressure: 20 percent of positive design pressure, but not more than 15 lbf/sq. ft..

I. Forced-Entry Resistance: Comply with Performance Grade 10 requirements when tested according to ASTM F 588.

J. Life-Cycle Testing: Test according to AAMA 910 and comply with AAMA/WDMA 101/I.S.2/NAFS.

K. Operating Force and Auxiliary (Durability) Tests: Comply with AAMA/WDMA 101/I.S.2/NAFS for operating window types indicated.

## 2.4 GLAZING

A. Glass: Clear, insulating-glass units, argon gas filled, with low-E coating pyrolytic on second surface.

B. Glazing System: Manufacturer's standard factory-glazing system that produces weathertight seal and complies with requirements for windborne-debris resistance.

C. Dual-Action Windows: Provide pivoting unit, constructed of one sheet of glass in a removable sash for access to interior of unit, installed with airtight gaskets.

## 2.5 HARDWARE

A. General: Provide manufacturer's standard hardware fabricated from aluminum, stainless steel, carbon steel complying with AAMA 907, or other corrosion-resistant material compatible with aluminum; designed to smoothly operate, tightly close, and securely lock aluminum windows, and sized to accommodate sash or ventilator weight and dimensions. Do not use aluminum in frictional contact with other metals.

B. Counterbalancing Mechanism: Comply with AAMA 902.

1. Sash Balance: Concealed, ultralift spring type capable of lifting 70 percent of sash weight, of size and capacity to hold sash stationary at any open position.

C. Sill Cap/Track: Extruded-aluminum track with natural anodized finish, of thickness, dimensions, and profile indicated; designed to comply with performance requirements indicated and to drain to the exterior.

D. Locks and Latches: Designed to allow unobstructed movement of the sash across adjacent sash in direction indicated and operated from the inside only.

E. Roller Assemblies: Low-friction design.

F. Limit Devices: Provide limit devices designed to restrict sash or ventilator opening.

1. Safety Devices: Limit clear opening to 6 inches for ventilation; with custodial key release.

## 2.6 INSECT SCREENS

A. General: Design windows and hardware to accommodate screens in a tight-fitting, removable arrangement, with a minimum of exposed fasteners and latches. Fabricate insect screens to fully integrate with window frame. Locate screens on inside of window and provide for each operable exterior sash or ventilator.

1. Aluminum Tubular Frame Screens: Comply with SMA 1004, "Specifications for Aluminum Tubular Frame Screens for Windows," Architectural C-24 class.
2. Comply with SMA 1004, "Specifications for Aluminum Tubular Frame Screens for Windows," for minimum standards of appearance, fabrication, attachment of screen fabric, hardware, and accessories unless more stringent requirements are indicated.

B. Stainless-Steel Insect Screen Frames: Fabricate frames of nonmagnetic stainless-steel members of 0.020-inch minimum wall thickness, with mitered or coped joints or corner extrusions, concealed fasteners, adjustable rollers, and removable PVC spline/anchor concealing edge of frame. Finish frames with No. 2B, bright mill finish.

## 2.7 ACCESSORIES

A. Integral Ventilating System/Device: Provide weather-stripped, adjustable, horizontal fresh-air vent, with a free airflow slot, full width of window sash by approximately 1 inch 3 inches when open, complying with AAMA/WDMA 101/I.S.2/NAFS. Equip vent bar with an integral insect screen, removable for cleaning.

B. Window Cleaner Anchor Bolts: Provide window cleaner anchor bolts of standard design, complying with requirements of authorities having jurisdiction. Fabricate bolts of nonmagnetic stainless steel.

1. Reinforce window units or mullions to receive bolts and provide additional anchorage of units at bolt locations.

C. Integral Louver Blinds: Provide remotely operated horizontal louver blinds in the space between insulated glass unit and additional pane. Reference Section 122113 Horizontal Louver Blinds. Operating hardware located on inside face of sash.

## 2.8 FABRICATION

A. Fabricate aluminum windows in sizes indicated. Include a complete system for assembling components and anchoring windows.

B. Fabricate aluminum windows that are reglazable without dismantling sash or ventilator framing.

C. Thermally Improved Construction: Fabricate aluminum windows with an integral, concealed, low-conductance thermal barrier; located between exterior materials and window members exposed on interior side; in a manner that eliminates direct metal-to-metal contact.

1. Provide thermal-break construction that has been in use for not less than three years and has been tested to demonstrate resistance to thermal conductance and condensation and to show adequate strength and security of glass retention.
2. Provide thermal barriers tested according to AAMA 505; determine the allowable design shear flow per the appendix in AAMA 505.
3. Provide hardware with low conductivity or nonmetallic material for hardware bridging thermal breaks at frame or vent sash.

D. Weather Stripping: Provide full-perimeter weather stripping for each operable sash and ventilator.

1. Horizontal-Sliding Windows: Provide operable sash with a double row of sliding weather stripping in horizontal rails and single- or double-row weather stripping in meeting or jamb stiles, as required to meet specified performance requirements. Provide compression-type weather stripping at perimeter of each movable panel where sliding-type weather stripping is not appropriate.
2. Vertically Pivoted Windows: Provide double-row weather stripping.

E. Weep Holes: Provide weep holes and internal passages to conduct infiltrating water to exterior.

F. Provide water-shed members above side-hinged ventilators and similar lines of natural water penetration.

G. Mullions: Provide mullions and cover plates as shown, matching window units, complete with anchors for support to structure and installation of window units. Allow for erection tolerances and provide for movement of window units due to thermal expansion and building deflections, as indicated. Provide mullions and cover plates capable of withstanding design loads of window units.

H. Subframes: Provide subframes with anchors for window units as shown, of profile and dimensions indicated but not less than 0.062-inch- thick extruded aluminum. Miter or cope corners, and weld and dress smooth with concealed mechanical joint fasteners. Finish to match window units. Provide subframes capable of withstanding design loads of window units.

I. Factory-Glazed Fabrication: Glaze aluminum windows in the factory where practical and possible for applications indicated. Comply with requirements in Division 08 Section "Glazing" and with AAMA/WDMA 101/I.S.2/NAFS.

J. Glazing Stops: Provide snap-on glazing stops coordinated with Division 08 Section "Glazing" and glazing system indicated. Provide glazing stops to match sash and ventilator frames.

## 2.9 FINISHES, GENERAL

A. Comply with NAAMM's "Metal Finishes Manual for Architectural and Metal Products" for recommendations for applying and designating finishes.

B. Protect mechanical finishes on exposed surfaces from damage by applying a strippable, temporary protective covering before shipping.

C. Appearance of Finished Work: Variations in appearance of abutting or adjacent pieces are acceptable if they are within one-half of the range of approved Samples. Noticeable variations in the same piece are not acceptable. Variations in appearance of other components are acceptable if they are within the range of approved Samples and are assembled or installed to minimize contrast.

## 2.10 ALUMINUM FINISHES

A. Clear Anodic Finish: AAMA 611, AA-MI2C22A41, Class I, 0.018 min. or thicker.

# PART 3 - EXECUTION

## 3.1 EXAMINATION

A. Examine openings, substrates, structural support, anchorage, and conditions, with Installer present, for compliance with requirements for installation tolerances and other conditions affecting performance of work. Verify rough opening dimensions, levelness of sill plate, and operational clearances. Examine wall flashings, vapor retarders, water and weather barriers, and other built-in components to ensure a coordinated, weathertight window installation.

1. Masonry Surfaces: Visibly dry and free of excess mortar, sand, and other construction debris.
2. Metal Surfaces: Dry; clean; free of grease, oil, dirt, rust, corrosion, and welding slag; without sharp edges or offsets at joints.
3. Proceed with installation only after unsatisfactory conditions have been corrected.

## 3.2 INSTALLATION

A. Comply with Drawings, Shop Drawings, and manufacturer's written instructions for installing windows, hardware, accessories, and other components.

B. Install windows level, plumb, square, true to line, without distortion or impeding thermal movement, anchored securely in place to structural support, and in proper relation to wall flashing and other adjacent construction.

C. Set sill members in bed of sealant or with gaskets, as indicated, for weathertight construction.

D. Install windows and components to drain condensation, water penetrating joints, and moisture migrating within windows to the exterior.

E. Separate aluminum and other corrodible surfaces from sources of corrosion or electrolytic action at points of contact with other materials.

## 3.3 FIELD QUALITY CONTROL

A. Testing Agency: Owner will engage a qualified testing agency to perform tests and inspections and prepare test reports.

1. Testing and inspecting agency will interpret tests and state in each report whether tested work complies with or deviates from requirements.

B. Testing Services: Testing and inspecting of installed windows shall take place as follows:

1. Testing Methodology: Testing of windows for air infiltration and water resistance shall be performed according to AAMA 502, Test Method A, by applying same test pressures required to determine compliance with AAMA/WDMA 101/I.S.2/NAFS in Part 1 "Performance Requirements" Article.
2. Testing Extent: Three windows as selected by Architect and a qualified independent testing and inspecting agency. Windows shall be tested immediately after installation.
3. Test Reports: Shall be prepared according to AAMA 502.

C. Remove and replace noncomplying aluminum window and retest as specified above.

D. Additional testing and inspecting, at Contractor's expense, will be performed to determine compliance of replaced or additional work with specified requirements.

## 3.4 ADJUSTING, CLEANING, AND PROTECTION

A. Adjust operating sashes and ventilators, screens, hardware, operators, and accessories for a tight fit at contact points and weather stripping for smooth operation and weathertight closure. Lubricate hardware and moving parts.

B. Clean aluminum surfaces immediately after installing windows. Avoid damaging protective coatings and finishes. Remove excess sealants, glazing materials, dirt, and other substances.

C. Clean factory-glazed glass immediately after installing windows. Comply with manufacturer's written recommendations for final cleaning and maintenance. Remove nonpermanent labels, and clean surfaces.

D. Remove and replace glass that has been broken, chipped, cracked, abraded, or damaged during construction period.

E. Protect window surfaces from contact with contaminating substances resulting from construction operations. In addition, monitor window surfaces adjacent to and below exterior concrete and masonry surfaces during construction for presence of dirt, scum, alkaline deposits, stains, or other contaminants. If contaminating substances do contact window surfaces, remove contaminants immediately according to manufacturer's written recommendations.

END OF SECTION 085113

# SECTION 08710 - DOOR HARDWARE

## PART 1 - GENERAL

### 1.1 RELATED DOCUMENTS

A. Drawings and general provisions of the Contract, including General and Supplementary Conditions and Division 01 Specification Sections, apply to this Section.

### 1.2 SUMMARY

A. This Section includes the following:

1. Commercial door hardware.
2. Cylinders for doors specified in other Sections.
3. Electrified door hardware.

### 1.3 SUBMITTALS

A. Product Data: For each product indicated.

B. Shop Drawings: Include details of electrified door hardware and wiring diagrams.

C. Samples: For each exposed finish.

D. Door Hardware Schedule: Organized into door hardware sets indicating type, style, function, size, label, hand, manufacturer, fasteners, location, and finish of each door hardware item. Include description of each electrified door hardware function, including sequence of operation.

E. Keying Schedule: Detail Owner's final keying instructions for locks.

F. Product certificates.

### 1.4 QUALITY ASSURANCE

A. Supplier Qualifications: Person who is or employs a qualified DHI Architectural Hardware Consultant.

B. Source Limitations: Obtain electrified door hardware from same manufacturer as mechanical door hardware, unless otherwise indicated. Manufacturers that are listed to perform electrical modifications, by a testing and inspecting agency acceptable to authorities having jurisdiction, are acceptable.

C. Keying Conference: Conduct conference at Project site. Incorporate keying conference decisions into final keying schedule.

D. Pre-Installation Conference: Conduct conference at Project site.

E. Keys: Deliver keys to Owner by registered mail.

F. Templates: Obtain and distribute templates for doors, frames, and other work specified to be factory prepared for installing door hardware.

G. Standards: Comply with BHMA A156 series standards, Grade 1.

H. Certified Products: Provide door hardware that is listed in BHMA directory of certified products.

1.5 WARRANTY

A. Special Warranty: Manufacturer's standard form in which manufacturer agrees to repair or replace components of door hardware that fails in materials or workmanship within warranty period from date of Final Completion.
   1. Warranty Period for Manual Closers: 10 years.
   2. Warranty Period for Exit Devices: 3 years.
   3. Warranty Period for Locks: 7 years.
   4. All other hardware one year.

PART 2 - PRODUCTS

2.1 MANUFACTURERS

A. Product: Subject to compliance with requirements, provide the product named for each door hardware item indicated in Door Hardware Sets.

B. Basis-of-Design Product: Product named for each door hardware item indicated in Door Hardware Sets establishes the basis of design. Provide either the named product or a comparable product by one of the manufacturers specified for each type of hardware item.

C. Manufacturers Used in the specification:

| **Products** | **Manufacture Specified** | **Acceptable Equals** |
|---|---|---|
| Hinges | Ives | Hager, Stanley |
| Continuous Hinges | Ives | Roton, Select |
| Locksets | Schlage (Beechwood & Etna) | None |
| | Falcon (Kae Avenue) | None |
| Exit Devices | Von Duprin 99 Series | Precision Apex |
| | | Sargent 80 Series |
| Closers | LCN 4041 MC | Sargent 281 x MC |
| | | C-R DC6200 x MC |
| Overhead Stops | Glynn Johnson | Rixson, ABH |
| Kick Plates, Stops | Ives | Hager, Rockwood |
| Thresholds/Seals | National Guard | Hager, Pemko |
| Power Transfers/Supplies | Von Duprin | Precision, Sargent |
| Cylinder Cores | Schlage | None |

## 2.2 DOOR HARDWARE

A. Scheduled Door Hardware: Provide door hardware according to Door Hardware Sets at the end of Part 3. Manufacturers' names are abbreviated.

## 2.3 HINGES

A. General: Except for hinges and pivots to be installed entirely (both leaves) into wood doors and frames, provide only template-produced units.

B. Hinge Base Metal: Unless otherwise indicated, provide the following:

1. Exterior Hinges: Stainless steel, with stainless-steel pin.
2. Interior Hinges: Steel, with steel pin.
3. Hinges for Fire-Rated Assemblies: Steel, with steel pin.

C. Non-removable Pins: Provide set screw in hinge barrel that prevents removal of pin while door is closed; for out-swinging exterior doors.

D. Screws: Phillips flat-head screws; screw heads finished to match surface of hinges.

E. Metal Doors and Frames: Machine screws (drilled and tapped holes).

## 2.4 MECHANICAL LOCKS AND LATCHES

A. Cylindrical Locks:

1. Locks shall be ANSI A156.2, Series 4000 Grade 1 UL Listed for 3-hour doors. Manufactured from heavy gauge cold rolled steel mechanisms that are corrosion treated for normal conditions.

2. Locks to have standard 2-3/4” backset with a full 1/2" reversible dead latch. Thru-bolted mounting post for positive interlock to the door with concealed mounting screws.

3. Lever trim shall be pressure cast zinc to match finishes. The design specified, with 3-7/16” diameter roses. Trim shall be applied by “no exposed screws”.

## 2.5 BOLTS

Shall have forged bronze faceplate with extruded brass lever wrought brass guide and strike. Flush bolts for hollow metal doors shall be extension rod type door up to 7’6” in height shall have 12” steel or brass rods, manual flush bolts for doors over 7’6” in height shall be increased by 6” for each additional 6” of door height. Wood doors shall have corner-wrap type. Provide dust proof strikes for all bottom bolts.

## 2.6 EXIT DEVICES

A. Panic Exit Devices: Listed and labeled for panic protection, based on testing according to UL 305.

B. Fire Exit Devices: Complying with NFPA 80 that are listed and labeled for fire and panic protection, based on testing according to UL 305 and NFPA 252.

C. All lever design shall match mortise or cylindrical lock lever designs.

D. All devices to incorporate a security dead-latching feature. Provide roller strikes for all rim and surface mounted vertical rod devices, ASA strikes for mortise devices, and manufacturer's standard strikes for concealed vertical rod devices.

## 2.7 CLOSERS

A. Surface-Mounted Closers:

1. Spring power shall be continuously adjustable over the full range of closer sizes, and allow for reduced opening force for the physically handicapped. Hydraulic regulation shall be by tamper-proof, non-critical valves. Closers shall have separate adjustment for latch speed, general speed, and back check.

2. All closers will not be seen on the public side or hallway side of the door. The appropriate drop plate or mounting plates will be used as conditions dictate.

## 2.8 PROTECTIVE TRIM UNITS

A. Protective Trim Units: Sized 2" inches less than door width on push side and 1" inch less than door width on pull side, by height scheduled or indicated. Fasten with exposed machine or self-tapping screws.

## 2.9 STOPS AND HOLDERS

A. Stops and Holders: Provide floor stops for doors, unless wall or other type stops are scheduled or indicated. Do not mount floor stops where they will impede traffic. Where floor or wall stops are not appropriate, provide overhead holders.

B. Silencers for Door Frames: Neoprene or rubber; fabricated for drilled-in application to frame.

## 2.10 DOOR GASKETING AND THRESHOLDS

A. Door Gasketing: Provide continuous weather-strip gasketing on exterior doors and provide smoke, light, or sound gasketing on interior doors where indicated or scheduled. Provide non-corrosive fasteners for exterior applications and elsewhere as indicated.

## 2.11 CYLINDERS, KEYING, AND STRIKES

A. Cylinders: Tumbler type, constructed from brass or bronze, stainless steel, or nickel silver.

B. Keying System: Factory-registered keying system; grand master key system.

## 2.12 FABRICATION

A. Base Metals: Furnish metals of a quality equal to or greater than that of specified door hardware units and BHMA A156.18 for finishes. Do not furnish manufacturer's standard materials if different from specified standard.

B. Fasteners: Phillips flat-head screws with finished heads to match surface of door hardware, unless otherwise indicated. Provide steel machine or wood screws or steel through bolts for fire-rated applications.

C. Spacers or Sex Bolts: For through bolting of hollow metal doors.

D. Fasteners for Wood Doors: Comply with requirements of DHI WDHS.2, "Recommended Fasteners for Wood Doors."

E. Finishes: Comply with BHMA A156.18.

# PART 3 - EXECUTION

## 3.1 INSTALLATION

A. Examine doors and frames for compliance with requirements for installation tolerances, labeled fire door assembly construction, wall and floor construction, and other conditions affecting performance. Examine roughing-in for electrical power systems to verify actual locations of wiring connections before electrified door hardware installation.

B. Steel Door and Frame Preparation: Comply with DHI A115 series. Drill and tap doors and frames for surface-applied hardware according to SDI 107.

C. Wood Door Preparation: Comply with DHI A115-W series.

D. Mounting Heights: Comply with the following requirements, unless otherwise indicated:

1. Standard Steel Doors and Frames: DHI's "Recommended Locations for Architectural Hardware for Standard Steel Doors and Frames."
2. Custom Steel Doors and Frames: DHI's "Recommended Locations for Builders' Hardware for Custom Steel Doors and Frames."
3. Wood Doors: DHI WDHS.3, "Recommended Locations for Architectural Hardware for Wood Flush Doors."

E. Adjust and reinforce attachment substrates as necessary for proper installation and operation. Drill and countersink units that are not factory prepared for anchorage fasteners. Space fasteners and anchors according to industry standards.

1. Thresholds: Set thresholds for exterior and acoustical doors in full bed of sealant complying with requirements specified in Division 7 Section "Joint Sealants."

F. Adjust door control devices to compensate for final operation of heating and ventilating equipment and to comply with accessibility requirements.

1. Door Closers: Adjust sweep period so that from an open position of 70 degrees, the door will take at least three seconds to move to a point 3 inches (75 mm) from the latch, measured to the leading edge of the door.

## 3.2 FIELD QUALITY CONTROL

A. Inspections: Owner will engage a qualified independent Architectural Hardware Consultant to perform inspections and to prepare inspection reports.

## 3.3 DOOR HARDWARE SETS

HW SET: 01

| | | | | | |
|---|---|---|---|---|---|
| 1 | EA | POWER TRANSFER | EPT-10 | 689 | VON |
| 1 | EA | CONTINUOUS HINGE | 112HD EPT | 628 | IVE |
| 1 | EA | PANIC HARDWARE | RX LX 99EO | 626 | VON |
| 1 | EA | SURFACE CLOSER | 4041 X 61 | 689 | LCN |
| 1 | EA | OVERHEAD STOP | 100S | 630 | GLY |
| 1 | EA | THRESHOLD | 896S | AL | NGP |
| 1 | EA | POWER SUPPLY | PS914 | GRY | VON |
| | | | POSITION SWITCHES BY OTHERS | | |
| | | | SEALS BY DOOR SUPPLIER | | |

HW SET: 2

| | | | | | |
|---|---|---|---|---|---|
| 3 | EA | HINGE | 5BB1 4.5 X 4.5 | 652 | IVE |
| 1 | EA | CLASSROOM LOCK | ND75TD RHO | 626 | SCH |
| 2 | EA | CORE ONLY | 23-030 | 626 | SCH |
| 1 | EA | KICK PLATE | 8400 4" X 2" LDW | 630 | IVE |
| 1 | EA | WALL STOP & HOLDER | WS40 | 626 | IVE |
| 2 | SET | SEALS | 5050B | BRN | NGP |
| 1 | EA | DOOR BOTTOM | 422N | AL | NGP |

HW SET: 3

| | | | | | |
|---|---|---|---|---|---|
| 3 | EA | HINGE | 5BB1 4.5 X 4.5 | 652 | IVE |
| 1 | EA | STOREROOM LOCK | ND80TD RHO | 626 | SCH |
| 1 | EA | CORE ONLY | 23-030 | 626 | SCH |
| 1 | EA | OVERHEAD HOLDER | 904H | 630 | GLY |

HW SET: 4

| | | | | | |
|---|---|---|---|---|---|
| 3 | EA | HINGE | 5BB1HW 4.5 X 4.5 | 652 | IVE |
| 1 | EA | FIRE EXIT HARDWARE | 99L-BE-F 996L-BE | 626 | VON |
| 1 | EA | SURFACE CLOSER | 4041 MC | 689 | LCN |
| 1 | EA | KICK PLATE | 8400 8" X 2" LDW | 630 | IVE |

| | | | | | |
|---|---|---|---|---|---|
| 1 | EA | WALL STOP | WS407CCV | 630 | IVE |
| 1 | SET | SEALS | 9450B | BRN | NGP |

HW SET: 5

| | | | | | |
|---|---|---|---|---|---|
| 3 | EA | HINGE | 5BB1 4.5 X 4.5 | 652 | IVE |
| 1 | EA | CLASSROOM LOCK | T381 IC-SC DANE | 626 | FAL |
| 2 | EA | CORE ONLY | 23-030 | 626 | SCH |
| 1 | EA | KICK PLATE | 8400 4" X 2" LDW | 630 | IVE |
| 1 | EA | WALL STOP & HOLDER | WS40 | 626 | IVE |
| 2 | SET | SEALS | 5050B | BRN | NGP |
| 1 | EA | DOOR BOTTOM | 422N | AL | NGP |

HW SET: 6

| | | | | | |
|---|---|---|---|---|---|
| 3 | EA | HINGE | 5BB1 4.5 X 4.5 | 652 | IVE |
| 1 | EA | STOREROOM LOCK | T581 IC-SC DANE | 626 | FAL |
| 1 | EA | CORE ONLY | 23-030 | 626 | SCH |
| 1 | EA | OVERHEAD HOLDER | 904H | 630 | GLY |

HW SET: 7

| | | | | | |
|---|---|---|---|---|---|
| 6 | EA | HINGE | 5BB1HW 4.5 X 4.5 | 652 | IVE |
| 2 | EA | FIRE EXIT HARDWARE | 9927L-BE-F 996L-BE LBR | 626 | VON |
| 2 | EA | SURFACE CLOSER | 4041 MC | 689 | LCN |
| 2 | EA | OVERHEAD STOP | 900S | 630 | GLY |
| 2 | EA | KICK PLATE | 8400 8” X 1” LDW | 630 | IVE |
| 1 | SET | SEALS | 9450B | BRN | NGP |
| 1 | SET | SEALS | 9550 | DKB | NGP |

# SECTION 08710 - DOOR HARDWARE

## PART 1 - GENERAL

### 1.1 RELATED DOCUMENTS

A. Drawings and general provisions of the Contract, including General and Supplementary Conditions and Division 01 Specification Sections, apply to this Section.

### 1.2 SUMMARY

A. This Section includes the following:

1. Commercial door hardware.
2. Cylinders for doors specified in other Sections.
3. Electrified door hardware.

### 1.3 SUBMITTALS

A. Product Data: For each product indicated.

B. Shop Drawings: Include details of electrified door hardware and wiring diagrams.

C. Samples: For each exposed finish.

D. Door Hardware Schedule: Organized into door hardware sets indicating type, style, function, size, label, hand, manufacturer, fasteners, location, and finish of each door hardware item. Include description of each electrified door hardware function, including sequence of operation.

E. Keying Schedule: Detail Owner's final keying instructions for locks.

F. Product certificates.

### 1.4 QUALITY ASSURANCE

A. Supplier Qualifications: Person who is or employs a qualified DHI Architectural Hardware Consultant.

B. Source Limitations: Obtain electrified door hardware from same manufacturer as mechanical door hardware, unless otherwise indicated. Manufacturers that are listed to perform electrical modifications, by a testing and inspecting agency acceptable to authorities having jurisdiction, are acceptable.

C. Keying Conference: Conduct conference at Project site. Incorporate keying conference decisions into final keying schedule.

D. Pre-Installation Conference: Conduct conference at Project site.

E. Keys: Deliver keys to Owner by registered mail.

F. Templates: Obtain and distribute templates for doors, frames, and other work specified to be factory prepared for installing door hardware.

G. Standards: Comply with BHMA A156 series standards, Grade 1.

H. Certified Products: Provide door hardware that is listed in BHMA directory of certified products.

1.5 WARRANTY

A. Special Warranty: Manufacturer's standard form in which manufacturer agrees to repair or replace components of door hardware that fails in materials or workmanship within warranty period from date of Final Completion.
   1. Warranty Period for Manual Closers: 10 years.
   2. Warranty Period for Exit Devices: 3 years.
   3. Warranty Period for Locks: 7 years.
   4. All other hardware one year.

PART 2 - PRODUCTS

2.1 MANUFACTURERS

A. Product: Subject to compliance with requirements, provide the product named for each door hardware item indicated in Door Hardware Sets.

B. Basis-of-Design Product: Product named for each door hardware item indicated in Door Hardware Sets establishes the basis of design. Provide either the named product or a comparable product by one of the manufacturers specified for each type of hardware item.

C. Manufacturers Used in the specification:

| **Products** | **Manufacture Specified** | **Acceptable Equals** |
|---|---|---|
| Hinges | Ives | Hager, Stanley |
| Continuous Hinges | Ives | Roton, Select |
| Locksets | Schlage (Beechwood & Etna) | None |
| | Falcon (Kae Avenue) | None |
| Exit Devices | Von Duprin 99 Series | Precision Apex |
| | | Sargent 80 Series |
| Closers | LCN 4041 MC | Sargent 281 x MC |
| | | C-R DC6200 x MC |
| Overhead Stops | Glynn Johnson | Rixson, ABH |
| Kick Plates, Stops | Ives | Hager, Rockwood |
| Thresholds/Seals | National Guard | Hager, Pemko |
| Power Transfers/Supplies | Von Duprin | Precision, Sargent |
| Cylinder Cores | Schlage | None |

## 2.2 DOOR HARDWARE

A. Scheduled Door Hardware: Provide door hardware according to Door Hardware Sets at the end of Part 3. Manufacturers' names are abbreviated.

## 2.3 HINGES

A. General: Except for hinges and pivots to be installed entirely (both leaves) into wood doors and frames, provide only template-produced units.

B. Hinge Base Metal: Unless otherwise indicated, provide the following:

1. Exterior Hinges: Stainless steel, with stainless-steel pin.
2. Interior Hinges: Steel, with steel pin.
3. Hinges for Fire-Rated Assemblies: Steel, with steel pin.

C. Non-removable Pins: Provide set screw in hinge barrel that prevents removal of pin while door is closed; for out-swinging exterior doors.

D. Screws: Phillips flat-head screws; screw heads finished to match surface of hinges.

E. Metal Doors and Frames: Machine screws (drilled and tapped holes).

## 2.4 MECHANICAL LOCKS AND LATCHES

A. Cylindrical Locks:

1. Locks shall be ANSI A156.2, Series 4000 Grade 1 UL Listed for 3-hour doors. Manufactured from heavy gauge cold rolled steel mechanisms that are corrosion treated for normal conditions.

2. Locks to have standard 2-3/4” backset with a full 1/2" reversible dead latch. Thru-bolted mounting post for positive interlock to the door with concealed mounting screws.

3. Lever trim shall be pressure cast zinc to match finishes. The design specified, with 3-7/16” diameter roses. Trim shall be applied by “no exposed screws”.

## 2.5 BOLTS

Shall have forged bronze faceplate with extruded brass lever wrought brass guide and strike. Flush bolts for hollow metal doors shall be extension rod type door up to 7’6” in height shall have 12” steel or brass rods, manual flush bolts for doors over 7’6” in height shall be increased by 6” for each additional 6” of door height. Wood doors shall have corner-wrap type. Provide dust proof strikes for all bottom bolts.

## 2.6 EXIT DEVICES

A. Panic Exit Devices: Listed and labeled for panic protection, based on testing according to UL 305.

B. Fire Exit Devices: Complying with NFPA 80 that are listed and labeled for fire and panic protection, based on testing according to UL 305 and NFPA 252.

C. All lever design shall match mortise or cylindrical lock lever designs.

D. All devices to incorporate a security dead-latching feature. Provide roller strikes for all rim and surface mounted vertical rod devices, ASA strikes for mortise devices, and manufacturer's standard strikes for concealed vertical rod devices.

## 2.7 CLOSERS

A. Surface-Mounted Closers:

1. Spring power shall be continuously adjustable over the full range of closer sizes, and allow for reduced opening force for the physically handicapped. Hydraulic regulation shall be by tamper-proof, non-critical valves. Closers shall have separate adjustment for latch speed, general speed, and back check.

2. All closers will not be seen on the public side or hallway side of the door. The appropriate drop plate or mounting plates will be used as conditions dictate.

## 2.8 PROTECTIVE TRIM UNITS

A. Protective Trim Units: Sized 2" inches less than door width on push side and 1" inch less than door width on pull side, by height scheduled or indicated. Fasten with exposed machine or self-tapping screws.

## 2.9 STOPS AND HOLDERS

A. Stops and Holders: Provide floor stops for doors, unless wall or other type stops are scheduled or indicated. Do not mount floor stops where they will impede traffic. Where floor or wall stops are not appropriate, provide overhead holders.

B. Silencers for Door Frames: Neoprene or rubber; fabricated for drilled-in application to frame.

## 2.10 DOOR GASKETING AND THRESHOLDS

A. Door Gasketing: Provide continuous weather-strip gasketing on exterior doors and provide smoke, light, or sound gasketing on interior doors where indicated or scheduled. Provide non-corrosive fasteners for exterior applications and elsewhere as indicated.

## 2.11 CYLINDERS, KEYING, AND STRIKES

A. Cylinders: Tumbler type, constructed from brass or bronze, stainless steel, or nickel silver.

B. Keying System: Factory-registered keying system; grand master key system.

## 2.12 FABRICATION

A. Base Metals: Furnish metals of a quality equal to or greater than that of specified door hardware units and BHMA A156.18 for finishes. Do not furnish manufacturer's standard materials if different from specified standard.

B. Fasteners: Phillips flat-head screws with finished heads to match surface of door hardware, unless otherwise indicated. Provide steel machine or wood screws or steel through bolts for fire-rated applications.

C. Spacers or Sex Bolts: For through bolting of hollow metal doors.

D. Fasteners for Wood Doors: Comply with requirements of DHI WDHS.2, "Recommended Fasteners for Wood Doors."

E. Finishes: Comply with BHMA A156.18.

# PART 3 - EXECUTION

## 3.1 INSTALLATION

A. Examine doors and frames for compliance with requirements for installation tolerances, labeled fire door assembly construction, wall and floor construction, and other conditions affecting performance. Examine roughing-in for electrical power systems to verify actual locations of wiring connections before electrified door hardware installation.

B. Steel Door and Frame Preparation: Comply with DHI A115 series. Drill and tap doors and frames for surface-applied hardware according to SDI 107.

C. Wood Door Preparation: Comply with DHI A115-W series.

D. Mounting Heights: Comply with the following requirements, unless otherwise indicated:

1. Standard Steel Doors and Frames: DHI's "Recommended Locations for Architectural Hardware for Standard Steel Doors and Frames."
2. Custom Steel Doors and Frames: DHI's "Recommended Locations for Builders' Hardware for Custom Steel Doors and Frames."
3. Wood Doors: DHI WDHS.3, "Recommended Locations for Architectural Hardware for Wood Flush Doors."

E. Adjust and reinforce attachment substrates as necessary for proper installation and operation. Drill and countersink units that are not factory prepared for anchorage fasteners. Space fasteners and anchors according to industry standards.

1. Thresholds: Set thresholds for exterior and acoustical doors in full bed of sealant complying with requirements specified in Division 7 Section "Joint Sealants."

F. Adjust door control devices to compensate for final operation of heating and ventilating equipment and to comply with accessibility requirements.

1. Door Closers: Adjust sweep period so that from an open position of 70 degrees, the door will take at least three seconds to move to a point 3 inches (75 mm) from the latch, measured to the leading edge of the door.

## 3.2 FIELD QUALITY CONTROL

A. Inspections: Owner will engage a qualified independent Architectural Hardware Consultant to perform inspections and to prepare inspection reports.

## 3.3 DOOR HARDWARE SETS

HW SET: 01

| | | | | | |
|---|---|---|---|---|---|
| 1 | EA | POWER TRANSFER | EPT-10 | 689 | VON |
| 1 | EA | CONTINUOUS HINGE | 112HD EPT | 628 | IVE |
| 1 | EA | PANIC HARDWARE | RX LX 99EO | 626 | VON |
| 1 | EA | SURFACE CLOSER | 4041 X 61 | 689 | LCN |
| 1 | EA | OVERHEAD STOP | 100S | 630 | GLY |
| 1 | EA | THRESHOLD | 896S | AL | NGP |
| 1 | EA | POWER SUPPLY | PS873 | GRY | VON |
| | | | POSITION SWITCHES BY OTHERS | | |
| | | | SEALS BY DOOR SUPPLIER | | |

HW SET: 2

| | | | | | |
|---|---|---|---|---|---|
| 3 | EA | HINGE | 5BB1 4.5 X 4.5 | 652 | IVE |
| 1 | EA | CLASSROOM LOCK | ND75TD RHO | 626 | SCH |
| 2 | EA | CORE ONLY | 23-030 | 626 | SCH |
| 1 | EA | KICK PLATE | 8400 4" X 2" LDW | 630 | IVE |
| 1 | EA | WALL STOP & HOLDER | WS40 | 626 | IVE |
| 2 | SET | SEALS | 5050B | BRN | NGP |
| 1 | EA | DOOR BOTTOM | 422N | AL | NGP |

HW SET: 3

| | | | | | |
|---|---|---|---|---|---|
| 3 | EA | HINGE | 5BB1 4.5 X 4.5 | 652 | IVE |
| 1 | EA | STOREROOM LOCK | ND80TD RHO | 626 | SCH |
| 1 | EA | CORE ONLY | 23-030 | 626 | SCH |
| 1 | EA | OVERHEAD HOLDER | 904H | 630 | GLY |

HW SET: 4

| | | | | | |
|---|---|---|---|---|---|
| 3 | EA | HINGE | 5BB1HW 4.5 X 4.5 | 652 | IVE |
| 1 | EA | FIRE EXIT HARDWARE | 99L-BE-F 996L-BE | 626 | VON |
| 1 | EA | SURFACE CLOSER | 4041 MC | 689 | LCN |
| 1 | EA | KICK PLATE | 8400 8" X 2" LDW | 630 | IVE |

| | | | | | |
|---|---|---|---|---|---|
| 1 | EA | WALL STOP | WS407CCV | 630 | IVE |
| 1 | SET | SEALS | 9450B | BRN | NGP |

HW SET: 5

| | | | | | |
|---|---|---|---|---|---|
| 3 | EA | HINGE | 5BB1 4.5 X 4.5 | 652 | IVE |
| 1 | EA | CLASSROOM LOCK | T381 IC-SC DANE | 626 | FAL |
| 2 | EA | CORE ONLY | 23-030 | 626 | SCH |
| 1 | EA | KICK PLATE | 8400 4" X 2" LDW | 630 | IVE |
| 1 | EA | WALL STOP & HOLDER | WS40 | 626 | IVE |
| 2 | SET | SEALS | 5050B | BRN | NGP |
| 1 | EA | DOOR BOTTOM | 422N | AL | NGP |

HW SET: 6

| | | | | | |
|---|---|---|---|---|---|
| 3 | EA | HINGE | 5BB1 4.5 X 4.5 | 652 | IVE |
| 1 | EA | STOREROOM LOCK | T581 IC-SC DANE | 626 | FAL |
| 1 | EA | CORE ONLY | 23-030 | 626 | SCH |
| 1 | EA | OVERHEAD HOLDER | 904H | 630 | GLY |

HW SET: 7

| | | | | | |
|---|---|---|---|---|---|
| 6 | EA | HINGE | 5BB1HW 4.5 X 4.5 | 652 | IVE |
| 2 | EA | FIRE EXIT HARDWARE | 9927L-BE-F 996L-BE LBR | 626 | VON |
| 2 | EA | SURFACE CLOSER | 4041 MC | 689 | LCN |
| 2 | EA | OVERHEAD STOP | 900S | 630 | GLY |
| 2 | EA | KICK PLATE | 8400 8” X 1” LDW | 630 | IVE |
| 1 | SET | SEALS | 9450B | BRN | NGP |
| 1 | SET | SEALS | 9550 | DKB | NGP |

# SECTION 088000 - GLAZING

## PART 1 - GENERAL

### 1.1 RELATED DOCUMENTS

A. Drawings and general provisions of the Contract, including General and Supplementary Conditions and Division 01 Specification Sections, apply to this Section.

### 1.2 SUMMARY

A. Section includes glazing for the following products and applications, including those specified in other Sections where glazing requirements are specified by reference to this Section:

1. Windows.
2. Doors.
3. Glazed curtain walls.
4. Storefront framing.
5. Glazed entrances.
6. Interior borrowed lites.

B. Related Sections:

1. Division 08 Section "Entrances and Storefronts."
2. Division 08 Section “Aluminum Windows.”
3. Division 08 Section “Structural Curtain Walls.”

### 1.3 DEFINITIONS

A. Glass Manufacturers: Firms that produce primary glass, fabricated glass, or both, as defined in referenced glazing publications.

B. Glass Thicknesses: Indicated by thickness designations in millimeters according to ASTM C 1036.

C. Interspace: Space between lites of an insulating-glass unit.

### 1.4 PERFORMANCE REQUIREMENTS

A. General: Installed glazing systems shall withstand normal thermal movement and wind and impact loads (where applicable) without failure, including loss or glass breakage attributable to the following: defective manufacture, fabrication, or installation; failure of sealants or gaskets to remain watertight and airtight; deterioration of glazing materials; or other defects in construction.

B. Delegated Design: Design glass, including comprehensive engineering analysis according to ASTM E 1300 by a qualified professional engineer;

1. Vertical Glazing: For glass surfaces sloped 15 degrees or less from vertical, design glass to resist design wind pressure based on glass type factors for short-duration load.
2. Sloped Glazing: For glass surfaces sloped more than 15 degrees from vertical, design glass to resist each of the following combinations of loads:

   a. Outward design wind pressure minus the weight of the glass. Base design on glass type factors for short-duration load.
   b. Inward design wind pressure plus the weight of the glass plus half of the design snow load. Base design on glass type factors for short-duration load.
   c. Half of the inward design wind pressure plus the weight of the glass plus the design snow load. Base design on glass type factors for long-duration load.

3. Glass Type Factors for Wired, Patterned, and Sandblasted Glass:
4. Thickness of Patterned Glass: Base design of patterned glass on thickness at thinnest part of the glass.
5. Probability of Breakage for Sloped Glazing: For glass surfaces sloped more than 15 degrees from vertical, design glass for a probability of breakage not greater than 0.001.
6. Maximum Lateral Deflection: For glass supported on all four edges, limit center-of-glass deflection at design wind pressure to not more than 1/50 times the short-side length or 1 inch, whichever is less.
7. Differential Shading: Design glass to resist thermal stresses induced by differential shading within individual glass lites.

C. Thermal Movements: Allow for thermal movements from ambient and surface temperature changes acting on glass framing members and glazing components.

1. Temperature Change: 120 deg F, ambient; 180 deg F, material surfaces.

## 1.5 PRECONSTRUCTION TESTING

A. Preconstruction Adhesion and Compatibility Testing: Test each glazing material type, tape sealant, gasket, glazing accessory, and glass-framing member for adhesion to and compatibility with elastomeric glazing sealants.

1. Testing will not be required if data are submitted based on previous testing of current sealant products and glazing materials matching those submitted.
2. Use ASTM C 1087 to determine whether priming and other specific joint-preparation techniques are required to obtain rapid, optimum adhesion of glazing sealants to glass, tape sealants, gaskets, and glazing channel substrates.
3. Samples of each type of material, including joint substrates, shims, sealant backings, secondary seals, and miscellaneous materials.
4. Schedule sufficient time for testing and analyzing results to prevent delaying the Work.
5. For materials failing tests, submit sealant manufacturer's written instructions for corrective measures including the use of specially formulated primers.

## 1.6 SUBMITTALS

A. Product Data: For each glass product and glazing material indicated.

B. Glass Samples: For each type of glass product; 12 inches square.

C. Glazing Accessory Samples: In 12-inch lengths, install sealant Samples between two strips of material representative in color of the adjoining framing system.

D. Glazing Schedule: List glass types and thicknesses for each size opening and location. Use same designations indicated on Drawings.

E. Delegated-Design Submittal: For glass indicated to comply with performance requirements and design criteria, including analysis data signed and sealed by the qualified professional engineer responsible for their preparation.

F. Qualification Data: For installers.

G. Product Certificates: For glass and glazing products, from manufacturer.

H. Product Test Reports: Based on evaluation of comprehensive tests performed by a qualified testing agency;

1. For glazing sealants, provide test reports based on testing current sealant formulations within previous 36-month period.

I. Preconstruction adhesion and compatibility test report.

J. Warranties: Sample of special warranties.

## 1.7 QUALITY ASSURANCE

A. Manufacturer Qualifications for Insulating-Glass Units with Sputter-Coated, Low-E Coatings: A qualified insulating-glass manufacturer who is approved and certified by coated-glass manufacturer.

B. Installer Qualifications: A qualified installer who employs glass installers for this Project who are certified under the National Glass Association's Certified Glass Installer Program.

C. Glass Testing Agency Qualifications: A qualified independent testing agency accredited according to the NFRC CAP 1 Certification Agency Program.

D. Sealant Testing Agency Qualifications: An independent testing agency qualified according to ASTM C 1021 to conduct the testing indicated.

E. Source Limitations for Glass: Obtain all from single source from single manufacturer for each glass type.

F. Source Limitations for Glazing Accessories: Obtain from single source from single manufacturer for each product and installation method.

G. Glazing Publications: Comply with published recommendations of glass product manufacturers and organizations below, unless more stringent requirements are indicated. Refer to these publications for glazing terms not otherwise defined in this Section or in referenced standards.

H. Safety Glazing Labeling: Where safety glazing labeling is indicated, permanently mark glazing with certification label. Label shall indicate manufacturer's name, type of glass, thickness, and safety glazing standard with which glass complies.

I. Fire-Protection-Rated Glazing Labeling: Permanently mark fire-protection-rated glazing with certification label of a testing agency acceptable to authorities having jurisdiction. Label shall indicate manufacturer's name, test standard, whether glazing is for use in fire doors or other openings, whether or not glazing passes hose-stream test, whether or not glazing has a temperature rise rating of 450 deg F, and the fire-resistance rating in minutes.

J. Insulating-Glass Certification Program: Permanently marked either on spacers or on at least one component lite of units with appropriate certification label of IGCC.

## 1.8 DELIVERY, STORAGE, AND HANDLING

A. Protect glazing materials according to manufacturer's written instructions. Prevent damage to glass and glazing materials from condensation, temperature changes, direct exposure to sun, or other causes.

B. Comply with insulating-glass manufacturer's written recommendations for venting and sealing units to avoid hermetic seal ruptures due to altitude change.

## 1.9 PROJECT CONDITIONS

A. Environmental Limitations: Do not proceed with glazing when ambient and substrate temperature conditions are outside limits permitted by glazing material manufacturers and when glazing channel substrates are wet from rain, frost, condensation, or other causes.

1. Do not install glazing sealants when ambient and substrate temperature conditions are outside limits permitted by sealant manufacturer or below 40 deg F.

## 1.10 WARRANTY

A. Manufacturer's Special Warranty for Glass Products: Manufacturer's standard form in which coated-glass manufacturer agrees to replace coated-glass units that deteriorate within specified warranty period. Deterioration of coated glass is defined as defects developed from normal use that are not attributed to glass breakage or to maintaining and cleaning coated glass contrary to manufacturer's written instructions. Defects include peeling, cracking, and other indications of deterioration in coating.

1. Warranty Period: 10 years from date of Final Completion.

B. Manufacturer’s Special Warranty on Insulating Glass: Manufacturer’s standard form in which insulating-glass manufacturer agrees to replace insulating-glass units that deteriorate within specified warranty period. Deterioration of insulating glass is defined as failure of hermetic seal

under normal use that is not attributed to glass breakage or to maintaining and cleaning insulating glass contrary to manufacturer's written instructions. Evidence of failure is the obstruction of vision by dust, moisture, or film on interior surfaces of glass.

1. Warranty Period: 10 years from date of Final Completion.

## PART 2 - PRODUCTS

### 2.1 GLASS PRODUCTS, GENERAL

A. Thickness: Where glass thickness is indicated, it is a minimum. Provide glass lites in thicknesses as needed to comply with requirements indicated.

1. Minimum Glass Thickness for Exterior Lites: Not less than 6.0 mm.
2. Thickness of Tinted Glass: Provide same thickness for each tint color indicated throughout Project.

B. Strength: Where float glass is indicated, provide annealed Kind FT heat-treated float glass as needed to comply with "Performance Requirements" Article. Where fully tempered glass is indicated, provide Kind FT heat-treated float glass.

C. Windborne-Debris-Impact Resistance: Provide exterior glazing that passes-protection testing requirements in ASTM E 1996 when tested according to ASTM E 1886. Test specimens shall be no smaller in width and length than glazing indicated for use on the Project and shall be installed in same manner as glazing indicated for use on the Project.

D. Thermal and Optical Performance Properties: Provide glass with performance properties specified, as indicated in manufacturer's published test data, based on procedures indicated below:

1. U-Factors: Center-of-glazing values, according to NFRC 100 and based on LBL's WINDOW 5.2 computer program, expressed as Btu/sq. ft. x h x deg F.
2. Solar Heat-Gain Coefficient and Visible Transmittance: Center-of-glazing values, according to NFRC 200 and based on LBL's WINDOW 5.2 computer program.
3. Visible Reflectance: Center-of-glazing values, according to NFRC 300.

### 2.2 GLASS PRODUCTS

A. Float Glass: ASTM C 1036, Type I, Quality-Q3, Class I (clear) unless otherwise indicated.

B. Ultraclear Float Glass: ASTM C 1036, Type I, Quality-Q3, Class I, complying with other requirements specified and with visible light transmission not less than 90 percent.

1. Basis-of-Design Product: Subject to compliance with requirements, provide Guardian Industries Corp.; Ultra White, or a comparable product by one of the following:

a. Pilkington North America; Optiwhite.
b. PPG Industries, Inc.; Starphire.

C. Heat-Treated Float Glass: ASTM C 1048; Type I; Quality-Q3; Class I (clear) unless otherwise indicated; of kind and condition indicated.

D. Uncoated Tinted Float Glass: Class 2, complying with other requirements specified.

1. Basis-of-Design Product: Subject to compliance with requirements, provide Guardian Industries Corp.; CrystalGray, or comparable product by one of the following:

a. Pilkington North America.
b. PPG Industries, Inc.

2. Tint Color: Gray.

E. Low-E Coated Vision Glass: ASTM C 1376, coated by vacuum deposition, sputter-coating process, and complying with other requirements specified.

1. Basis-of-Design Product: Subject to compliance with requirements, provide Guardian Industries Corp.; SunGuard SN68, or comparable product by one of the following:

a. PPG Industries, Inc.
b. Viracon.

F. Low-E Coated Spandrel Glass: ASTM C 1376, coated by vacuum deposition, sputter-coating process, and complying with other requirements specified.

1. Basis-of-Design Product: Subject to compliance with requirements, provide Guardian Industries Corp.; SunGuard SN68 or comparable product by one of the following:

a. PPG Industries, Inc.
b. Viracon.

2. Coating Color: Warm Gray.
3. Glass: Clear.
4. Visible Light Transmittance: N/A.
5. Outdoor Visible Reflectance: N/A.

G. Safety Glass: Clear; fully tempered with horizontal tempering.

1. Comply with ASTM C 1036, Type I, transparent flat, Class 1 clear, Quality Q3 (glazing select) and ASTM C 1048.
2. Comply with ANSI Z97.1.
3. Where glazing is to be installed in fire-rated partition, provide glazing that is also fire-protection rated in accordance with applicable code.
4. 6mm minimum thick.
5. Provide this type of glazing in the locations required by code.

## 2.3 SEALED INSULATING GLASS MATERIALS

A. Manufacturers: Subject to compliance with requirements, provide products by available manufacturers offering products that may be incorporated into the work including, but are not limited to:

1. Oldcastle Glass.
2. UGC.
3. Glenny Glass.

B. Insulating-Glass Units: Factory-assembled units consisting of sealed lites of glass separated by a dehydrated interspace, qualified according to ASTM E 2190, and complying with other requirements specified.

1. Sealing System: Dual seal.
2. Spacer: Manufacturer's standard spacer material and construction.

## 2.4 FIRE-PROTECTION-RATED GLAZING

A. Fire-Protection-Rated Glazing, General: Listed and labeled by a testing agency acceptable to authorities having jurisdiction, for fire-protection ratings indicated, based on testing according to NFPA 252 for door assemblies and NFPA 257 for window assemblies.

B. Film-Faced Ceramic Glazing: Clear, ceramic flat glass; 3/16-inch (5-mm) nominal thickness; faced on one surface with a clear glazing film; complying with testing requirements in 16 CFR 1201 for Category II materials.

1. Products: Subject to compliance with requirements, provide one of the following:

a. Nippon Electric Glass Co., Ltd. (distributed by Technical Glass Products); FireLite NT.
b. Safti First; SuperLite C/SP.
c. Schott North America, Inc.; Platinum F.
d. Vetrotech Saint-Gobain; SGG Keralite FR-F.

C. Laminated Ceramic Glazing: Laminated glass made from 2 plies of clear, ceramic flat glass; 5/16-inch (8-mm) total nominal thickness; complying with testing requirements in 16 CFR 1201 for Category II materials.

1. Products: Subject to compliance with requirements, provide one of the following:

a. Nippon Electric Glass Co., Ltd. (distributed by Technical Glass Products); FireLite Plus.
b. Schott North America, Inc.; Laminated Pyran Platinum L.
c. Vetrotech Saint-Gobain; SGG Keralite FR-L.

## 2.5 GLAZING GASKETS

A. Dense Compression Gaskets: Molded or extruded gaskets of profile and hardness required to maintain watertight seal, made from the following:

1. Neoprene complying with ASTM C 864.
2. EPDM complying with ASTM C 864.
3. Silicone complying with ASTM C 1115.
4. Thermoplastic polyolefin rubber complying with ASTM C 1115.

B. Soft Compression Gaskets: Extruded or molded, closed-cell, integral-skinned neoprene gaskets complying with ASTM C 509, Type II, black; of profile and hardness required to maintain watertight seal.

1. Application: Use where soft compression gaskets will be compressed by inserting dense compression gaskets on opposite side of glazing or pressure applied by means of pressure-glazing stops on opposite side of glazing.

C. Lock-Strip Gaskets: Neoprene extrusions in size and shape indicated, fabricated into frames with molded corner units and zipper lock-strips, complying with ASTM C 542, black.

## 2.6 GLAZING SEALANTS

A. General:

1. Compatibility: Provide glazing sealants that are compatible with one another and with other materials they will contact, including glass products, seals of insulating-glass units, and glazing channel substrates, under conditions of service and application, as demonstrated by sealant manufacturer based on testing and field experience.
2. Suitability: Comply with sealant and glass manufacturers' written instructions for selecting glazing sealants suitable for applications indicated and for conditions existing at time of installation.
3. Sealants used inside the weatherproofing system, shall have a VOC content of not more than 250 g/L when calculated according to 40 CFT 59, Subpart D (EPA Method 24).
4. Sealants used inside the weatherproofing system shall comply with the testing and product requirements of the California Department of Health Services “Standard Practice for the Testing of Volatile Organic Emissions from Various Sources Using Small-Scale Environmental Chambers.”

B. Glazing Sealant: Neutral-curing silicone glazing sealant complying with ASTM C 920, Class 100/50.

1. Products: Subject to compliance with requirements, provide one of the following:

a. Dow Corning Corporation; 790.
b. Pecora Corporation; 890.
c. Sika Corporation, Construction Products Division; SikaSil-C990.
d. Tremco Incorporated; Spectrem 1.

C. Glazing Sealants for Fire-Rated Glazing Products: Products that are approved by testing agencies that listed and labeled fire-resistant glazing products with which they are used for applications and fire-protection ratings indicated.

## 2.7 GLAZING TAPES

A. Back-Bedding Mastic Glazing Tapes: Preformed, butyl-based, 100 percent solids elastomeric tape; nonstaining and nonmigrating in contact with nonporous surfaces; with or without spacer rod as recommended in writing by tape and glass manufacturers for application indicated; and complying with ASTM C 1281 and AAMA 800 for products indicated below:

1. AAMA 804.3 tape, where indicated.
2. AAMA 806.3 tape, for glazing applications in which tape is subject to continuous pressure.
3. AAMA 807.3 tape, for glazing applications in which tape is not subject to continuous pressure.

B. Expanded Cellular Glazing Tapes: Closed-cell, PVC foam tapes; factory coated with adhesive on both surfaces; and complying with AAMA 800 for the following types:

1. AAMA 810.1, Type 1, for glazing applications in which tape acts as the primary sealant.
2. AAMA 810.1, Type 2, for glazing applications in which tape is used in combination with a full bead of liquid sealant.

## 2.8 MISCELLANEOUS GLAZING MATERIALS

A. General: Provide products of material, size, and shape complying with referenced glazing standard, requirements of manufacturers of glass and other glazing materials for application indicated, and with a proven record of compatibility with surfaces contacted in installation.

B. Cleaners, Primers, and Sealers: Types recommended by sealant or gasket manufacturer.

C. Setting Blocks: Elastomeric material with a Shore, Type A durometer hardness of 85, plus or minus 5.

D. Spacers: Elastomeric blocks or continuous extrusions of hardness required by glass manufacturer to maintain glass lites in place for installation indicated.

E. Edge Blocks: Elastomeric material of hardness needed to limit glass lateral movement (side walking).

F. Cylindrical Glazing Sealant Backing: ASTM C 1330, Type O (open-cell material), of size and density to control glazing sealant depth and otherwise produce optimum glazing sealant performance.

G. Perimeter Insulation for Fire-Resistive Glazing: Product that is approved by testing agency that listed and labeled fire-resistant glazing product with which it is used for application and fire-protection rating indicated.

## 2.9 FABRICATION OF GLAZING UNITS

A. Fabricate glazing units in sizes required to fit openings indicated for Project, with edge and face clearances, edge and surface conditions, and bite complying with written instructions of product manufacturer and referenced glazing publications, to comply with system performance requirements.

B. Clean-cut or flat-grind vertical edges of butt-glazed monolithic lites to produce square edges with slight chamfers at junctions of edges and faces.

C. Grind smooth and polish exposed glass edges and corners.

## 2.10 INSULATING-GLASS TYPES

A. Glass Type GL1: Clear insulating glass.

1. Overall Unit Thickness: 1 inch.
2. Thickness of Each Glass Lite: 6.0mm.
3. Outdoor Lite: Clear, Heat-strengthened if not required fully tempered for safety.
4. Interspace Content: Air.
5. Indoor Lite: Clear, Heat-strengthened if not required fully tempered for safety.
6. Winter Nighttime U-Factor: .47 maximum.
7. Summer Daytime U-Factor: .50 maximum.
8. Solar Heat Gain Coefficient: .73 maximum.
9. Provide safety glazing labeling.

B. Glass Type GL2: Low-e-coated, clear insulating glass.

1. Overall Unit Thickeness: 1 inch.
2. Thickness of Each Glass Lite: 6.0mm.
3. Outdoor Lite: Clear, Heat-strengthened if not required fully tempered for safety.
4. Interspace Content: Air.
5. Indoor Lite: Clear, Heat-strengthened if not required fully tempered for safety.
6. Low-E Coating: Sputtered on second surface.
7. Visible Light Transmittance: 68 percent minimum.
8. Winter Nighttime U-Factor: .29 maximum.
9. Summer Daytime U-Factor: .28 maximum.
10. Solar Heat Gain Coefficient: .38 maximum.
11. Provide safety glazing labeling.

C. Glass Type GL3: Low-e coated, gray tinted insulating glass.

1. Overall Unit Thickness: 1 inch.
2. Thickness of Each Glass Lite: 6.0mm.
3. Outdoor Lite: Tinted, Heat-strengthened if not required fully tempered for safety.
4. Interspace Content: Air.
5. Indoor Lite: Clear, Heat-strengthened if not required fully tempered for safety.
6. Visible Light Transmittance: 49 percent minimum
7. Winter Nighttime U-Factor: .29 maximum.
8. Summer Daytime U-Factor: .28 maximum.
9. Solar Heat Gain Coefficient: .30 maximum.
10. Provide safety glazing labeling.

D. Glass Type GL4: Ceramic-coated, low-e tinted, insulating spandrel glass.

1. Overall Unit Thickness: 1 inch.
2. Thickness of Each Glass Lite: 6.0mm.
3. Outdoor Lite: Tinted, Heat-strengthened if not required fully tempered for safety.
4. Interspace Content: Air.
5. Indoor Lite: Clear, Heat-strengthened if not required fully tempered for safety.
6. Low-E Coating: Sputtered on second and third surfaces.
7. Opaque Coating Location: Fourth surface.
8. Winter Nighttime U-Factor: .29 maximum.

9. Summer Daytime U-Factor: .28 maximum.

## PART 3 - EXECUTION

### 3.1 EXAMINATION

A. Examine framing, glazing channels, and stops, with Installer present, for compliance with the following:

1. Manufacturing and installation tolerances, including those for size, squareness, and offsets at corners.
2. Presence and functioning of weep systems.
3. Minimum required face and edge clearances.
4. Effective sealing between joints of glass-framing members.

B. Proceed with installation only after unsatisfactory conditions have been corrected.

### 3.2 PREPARATION

A. Clean glazing channels and other framing members receiving glass immediately before glazing. Remove coatings not firmly bonded to substrates.

B. Examine glazing units to locate exterior and interior surfaces. Label or mark units as needed so that exterior and interior surfaces are readily identifiable. Do not use materials that will leave visible marks in the completed work.

### 3.3 GLAZING, GENERAL

A. Comply with combined written instructions of manufacturers of glass, sealants, gaskets, and other glazing materials, unless more stringent requirements are indicated, including those in referenced glazing publications.

B. Adjust glazing channel dimensions as required by Project conditions during installation to provide necessary bite on glass, minimum edge and face clearances, and adequate sealant thicknesses, with reasonable tolerances.

C. Protect glass edges from damage during handling and installation. Remove damaged glass from Project site and legally dispose of off Project site. Damaged glass is glass with edge damage or other imperfections that, when installed, could weaken glass and impair performance and appearance.

D. Apply primers to joint surfaces where required for adhesion of sealants, as determined by preconstruction testing.

E. Install setting blocks in sill rabbets, sized and located to comply with referenced glazing publications, unless otherwise required by glass manufacturer. Set blocks in thin course of compatible sealant suitable for heel bead.

F. Do not exceed edge pressures stipulated by glass manufacturers for installing glass lites.

G. Provide spacers for glass lites where length plus width is larger than 50 inches.

1. Locate spacers directly opposite each other on both inside and outside faces of glass. Install correct size and spacing to preserve required face clearances, unless gaskets and glazing tapes are used that have demonstrated ability to maintain required face clearances and to comply with system performance requirements.
2. Provide 1/8-inch minimum bite of spacers on glass and use thickness equal to sealant width. With glazing tape, use thickness slightly less than final compressed thickness of tape.

H. Provide edge blocking where indicated or needed to prevent glass lites from moving sideways in glazing channel, as recommended in writing by glass manufacturer and according to requirements in referenced glazing publications.

I. Set glass lites in each series with uniform pattern, draw, bow, and similar characteristics.

J. Set glass lites with proper orientation so that coatings face exterior or interior as specified.

K. Where wedge-shaped gaskets are driven into one side of channel to pressurize sealant or gasket on opposite side, provide adequate anchorage so gasket cannot walk out when installation is subjected to movement.

L. Square cut wedge-shaped gaskets at corners and install gaskets in a manner recommended by gasket manufacturer to prevent corners from pulling away; seal corner joints and butt joints with sealant recommended by gasket manufacturer.

## 3.4 TAPE GLAZING

A. Position tapes on fixed stops so that, when compressed by glass, their exposed edges are flush with or protrude slightly above sightline of stops.

B. Install tapes continuously, but not necessarily in one continuous length. Do not stretch tapes to make them fit opening.

C. Cover vertical framing joints by applying tapes to heads and sills first and then to jambs. Cover horizontal framing joints by applying tapes to jambs and then to heads and sills.

D. Place joints in tapes at corners of opening with adjoining lengths butted together, not lapped. Seal joints in tapes with compatible sealant approved by tape manufacturer.

E. Do not remove release paper from tape until right before each glazing unit is installed.

F. Apply heel bead of elastomeric sealant.

G. Center glass lites in openings on setting blocks and press firmly against tape by inserting dense compression gaskets formed and installed to lock in place against faces of removable stops. Start gasket applications at corners and work toward centers of openings.

H. Apply cap bead of elastomeric sealant over exposed edge of tape.

## 3.5 GASKET GLAZING (DRY)

A. Cut compression gaskets to lengths recommended by gasket manufacturer to fit openings exactly, with allowance for stretch during installation.

B. Insert soft compression gasket between glass and frame or fixed stop so it is securely in place with joints miter cut and bonded together at corners.

C. Installation with Drive-in Wedge Gaskets: Center glass lites in openings on setting blocks and press firmly against soft compression gasket by inserting dense compression gaskets formed and installed to lock in place against faces of removable stops. Start gasket applications at corners and work toward centers of openings. Compress gaskets to produce a weathertight seal without developing bending stresses in glass. Seal gasket joints with sealant recommended by gasket manufacturer.

D. Installation with Pressure-Glazing Stops: Center glass lites in openings on setting blocks and press firmly against soft compression gasket. Install dense compression gaskets and pressure-glazing stops, applying pressure uniformly to compression gaskets. Compress gaskets to produce a weathertight seal without developing bending stresses in glass. Seal gasket joints with sealant recommended by gasket manufacturer.

E. Install gaskets so they protrude past face of glazing stops.

## 3.6 SEALANT GLAZING (WET)

A. Install continuous spacers, or spacers combined with cylindrical sealant backing, between glass lites and glazing stops to maintain glass face clearances and to prevent sealant from extruding into glass channel and blocking weep systems until sealants cure. Secure spacers or spacers and backings in place and in position to control depth of installed sealant relative to edge clearance for optimum sealant performance.

B. Force sealants into glazing channels to eliminate voids and to ensure complete wetting or bond of sealant to glass and channel surfaces.

C. Tool exposed surfaces of sealants to provide a substantial wash away from glass.

## 3.7 LOCK-STRIP GASKET GLAZING

A. Comply with ASTM C 716 and gasket manufacturer's written instructions. Provide supplementary wet seal and weep system unless otherwise indicated.

## 3.8 CLEANING AND PROTECTION

A. Protect exterior glass from damage immediately after installation by attaching crossed streamers to framing held away from glass. Do not apply markers to glass surface. Remove nonpermanent labels and clean surfaces.

B. Protect glass from contact with contaminating substances resulting from construction operations. If, despite such protection, contaminating substances do come into contact with glass, remove substances immediately as recommended in writing by glass manufacturer.

C. Examine glass surfaces adjacent to or below exterior concrete and other masonry surfaces at frequent intervals during construction, but not less than once a month, for buildup of dirt, scum, alkaline deposits, or stains; remove as recommended in writing by glass manufacturer.

D. Remove and replace glass that is broken, chipped, cracked, or abraded or that is damaged from natural causes, accidents, and vandalism, during construction period.

E. Wash glass on both exposed surfaces in each area of Project not more than four days before date scheduled for inspections that establish date of Final Completion. Wash glass as recommended in writing by glass manufacturer.

END OF SECTION 088000

# SECTION 092216 – NON-STRUCTURAL METAL FRAMING

## PART 1 - GENERAL

### 1.1 RELATED DOCUMENTS

A. Drawings and general provisions of the Contract, including General and Supplementary Conditions and Division 01 Specification Sections, apply to this Section.

### 1.2 SUMMARY

A. Section Includes:

1. Non-load-bearing steel framing systems for interior gypsum board assemblies.

### 1.3 ACTION SUBMITTALS

A. Product Data: For each type of product.

## PART 2 - PRODUCTS

### 2.1 PERFORMANCE REQUIREMENTS

A. STC-Rated Assemblies: For STC-rated assemblies, provide materials and construction identical to those tested in assembly indicated, according to ASTM E 90 and classified according to ASTM E 413 by an independent testing agency.

### 2.2 FRAMING SYSTEMS

A. Recycled Content of Steel Products: Postconsumer recycled content plus one-half of preconsumer recycled content not less than 10 percent.

B. Framing Members, General: Comply with ASTM C 754 for conditions indicated.

1. Steel Sheet Components: Comply with ASTM C 645 requirements for metal unless otherwise indicated.
2. Protective Coating: Coating with equivalent corrosion resistance of ASTM A 653/A 653M, G40, hot-dip galvanized unless otherwise indicated.

C. Studs and Runners: ASTM C 645. Use either steel studs and runners or dimpled steel studs and runners.

1. Steel Studs and Runners:

a. Minimum Base-Metal Thickness: 0.018 inch.
b. Depth: As indicated on Drawings.

2. Dimples Steel Studs and Runners:

a. Minimum Base-Metal Thickness: 0.025 inch.
b. Depth: As indicated on Drawings.

D. Slip-Type Head Joints: Where indicated, provide one of the following:

1. Double-Runner System: ASTM C 645 top runners, inside runner with 2-inch-deep flanges in thickness not less than indicted for studs and fastened to studs, and out runner sized to friction fit inside runner.
2. Deflection Track: Steel sheet top runner manufactured to prevent cracking of finishes applied to interior partition framing resulting from deflection of structure above in thickness not less than indicated for studs and in width to accommodate depth of studs.

a. Products: Subject to compliance with requirements, provide one of the following:\

1) Dietrich Metal Framing; SLP-TRK Slotted Deflection Track.
2) MBA Building Supplies.
3) Steel Network Inc. (The).
4) Superior Metal Trim; Superior Flex Track System (SFT).
5) Telling Industries.

## 2.3 AUXILIARY MATERIALS

A. General: Provide auxiliary materials that comply with referenced installation standards.

1. Fasteners for Metal Framing: Of type, material, size, corrosion resistance, holding power, and other properties required to fasten steel members to substrates.

B. Isolation Strip at Exterior Walls: Provide one of the following:

1. Asphalt-Saturated Organic Felt: ASTM D 226, Type I (No. 15 asphalt felt), nonperforated.

2. Foam Gasket: Adhesive-backed, closed-cell vinyl foam strips that allow fastener penetration without foam displacement, 1/8 inch thick, in width to suit steel stud size.

# PART 3 - EXECUTION

## 3.1 EXAMINATION

A. Examine areas and substrates, with Installer present, and including welded hollow-metal frames, cast-in anchors, and structural framing, for compliance with requirements and other conditions affecting performance of the Work.

B. Proceed with installation only after unsatisfactory conditions have been corrected.

## 3.2 INSTALLATION, GENERAL

A. Installation Standard: ASTM C 754

1. Gypsum Board Assemblies: Also comply with requirements in ASTM C 840 that apply to framing installation.

B. Install supplementary framing, and blocking to support fixtures, equipment services, heavy trim, grab bars, toilet accessories, furnishing, or similar construction.

C. Install bracing at terminations in assemblies.

D. Do not bridge building control and expansion joints with non-load-bearing steel framing members. Frame both side4 of joints independently.

## 3.3 INSTALLING FRAMED ASSEMBLIES

A. Install framing system components according to spacings indicated, but not greater than spacings required by referenced installation standards for assembly types.

1. Single-Layer Application: 16 inches o.c. unless otherwise indicated.
2. Multi-Layer Application: 16 inches o.c. unless otherwise indicated.

B. Where studs are installed directly against exterior masonry walls or dissimilar metals at exterior walls, install isolation strip between studs and exterior wall.

C. Install studs so flanges within framing system point in same direction.

D. Install tracks (runners) at floors and overhead supports. Extend framing full height to structural supports. Continue framing around ducts penetrating partitions above ceiling.

1. Slip-Type Head Joints: Where framing extends to overhead structural supports, install to produce joints at tops of framing systems that prevent axial loading of finished assemblies.
2. Other Framed Openings: Frame openings other than door openings the same as required for door openings unless otherwise indicated. Install framing below sills of openings to match framing required above door heads.
3. Sound-Rated Partitions: install framing to comply with sound-rated assembly indicated.

E. Installation Tolerance: Install each framing member so fastening surfaces vary not more than 1/8 inch from the plane formed by faces of adjacent framing.

END OF SECTION 092216

# SECTION 092900 - GYPSUM BOARD

## PART 1 - GENERAL

### 1.1 RELATED DOCUMENTS

A. Drawings and general provisions of the Contract, including General and Supplementary Conditions and Division 01 Specification Sections, apply to this Section.

### 1.2 SUMMARY

A. Section Includes:

1. Interior gypsum board.

B. Related Requirements:

1. Division 09 Section “Non-Structural Metal Framing: for non-structural framing and suspension systems that support gypsum board panels.

### 1.3 ACTION SUBMITTALS

A. Product Data: For each type of product.

### 1.4 DELIVERY, STORAGE AND HANDLING

A. Store materials inside under cover and keep them dry and protected against weather, condensation, direct sunlight, construction traffic, and other potential causes of damage. Stack panels flat and supported on risers on a flat platform to prevent sagging.

### 1.5 FIELD CONDITIONS

A. Environmental Limitations: Comply with ASTM C 840 requirements or gypsum board manufacturer's written recommendations, whichever are more stringent.

B. Do not install paper-faced gypsum panels until installation areas are enclosed and conditioned.

C. Do not install panels that are wet, those that are moisture damaged, and those that are mold damaged.

1. Indications that panels are wet or moisture damaged include, but are not limited to, discoloration, sagging, or irregular shape.
2. Indications that panels are mold damaged include, but are not limited to, fuzzy or splotchy surface contamination and discoloration.

# PART 2 - PRODUCTS

## 2.1 PERFORMANCE REQUIREMENTS

A. STC-Rated Assemblies: For STC-rated assemblies, provide materials and construction identical to those tested in assembly indicated according to ASTM E 90 and classified according to ASTM E 413 by an independent testing agency.

B. Low-Emitting Materials: For ceiling and wall assemblies, provide materials and construction identical to those tested in assembly and complying with the testing and product requirements of the California Department of Health Services' "Standard Practice for the Testing of Volatile Organic Emissions from Various Sources Using Small-Scale Environmental Chambers."

C. Standards: Provide gypsum board complying with or exceeding requirements of 2009 OSDM.

## 2.2 GYPSUM BOARD, GENERAL

A. Recycled Content of Gypsum Panel Products: Postconsumer recycled content plus one-half of preconsumer recycled content not less than 10 percent.

B. Regional Materials: Gypsum panel products shall be manufactured within 500 miles of Project site from materials that have been extracted, harvested, or recovered, as well as manufactured, within 500 miles of Project site.

C. Size: Provide maximum lengths and widths available that will minimize joints in each area and that correspond with support system indicated.

## 2.3 INTERIOR GYPSUM BOARD

A. Manufacturers: Subject to compliance with requirements, provide products by the following:

1. American Gypsum.
2. CertainTeed Corp.
3. Georgia-Pacific Gypsum LLC.
4. Lafarge North America Inc.
5. National Gypsum Company.
6. PABCO Gypsum.
7. Temple-Inland.
8. USG Corporation.

B. Gypsum Board, Type X: ASTM C 1396/C 1396M.

1. Thickness: 5/8 inch.
2. Long Edges: Tapered and featured (rounded or beveled) for prefilling.

C. Abuse-Resistant Gypsum Board: ASTM C 1629/C 1629M, Level 1.

1. Core: As indicated on Drawings.
2. Long Edges: Tapered.

3. Mold Resistance: ASTM D 3273, score of 10.

## 2.4 TRIM ACCESSORIES

A. Interior Trim: ASTM C 1047.

1. Material: Galvanized or aluminum-coated steel sheet or rolled zinc.
2. Shapes:

a. Cornerbead.
b. LC-Bead: J-shaped; exposed long flange receives joint compound.
c. Expansion (control) joint.

## 2.5 JOINT TREATMENT MATERIALS

A. General: Comply with ASTM C 475/C 475M.

B. Joint Tape:

1. Interior Gypsum Board: Paper.
2. Glass-Mat Gypsum Sheathing Board: 10-by-10 glass mesh.
3. Tile Backing Panels: As recommended by panel manufacturer.

C. Joint Compound for Interior Gypsum Board: For each coat use formulation that is compatible with other compounds applied on previous or for successive coats.

1. Prefilling: At open joints, rounded or beveled panel edges, and damaged surface areas, use setting-type taping compound.
2. Embedding and First Coat: For embedding tape and first coat on joints, fasteners, and trim flanges, use setting-type taping compound.

a. Use setting-type compound for installing paper-faced metal trim accessories.

3. Fill Coat: For second coat, use drying-type, all-purpose compound.
4. Finish Coat: For third coat, use drying-type, all-purpose compound.

## 2.6 AUXILIARY MATERIALS

A. General: Provide auxiliary materials that comply with referenced installation standards and manufacturer's written recommendations.

B. Steel Drill Screws: ASTM C 1002, unless otherwise indicated.

1. Use screws complying with ASTM C 954 for fastening panels to steel members from 0.033 to 0.112 inch thick.
2. For fastening cementitious backer units, use screws of type and size recommended by panel manufacturer.

# PART 3 - EXECUTION

## 3.1 EXAMINATION

A. Examine areas and substrates with Installer present, for compliance with requirements and other conditions affecting performance.

B. Examine panels before installation. Reject panels that are wet, moisture damaged, and mold damaged.

C. Proceed with installation only after unsatisfactory conditions have been corrected.

## 3.2 APPLYING AND FINISHING PANELS, GENERAL

A. Comply with ASTM C 840.

B. Install panels with face side out. Butt panels together for a light contact at edges and ends with not more than 1/16 inch of open space between panels. Do not force into place.

C. Locate edge and end joints over supports. Do not place tapered edges against cut edges or ends. Stagger vertical joints on opposite sides of partitions.

D. Form control and expansion joints with space between edges of adjoining gypsum panels.

E. Cover both faces of support framing with gypsum panels in concealed spaces (above ceilings, etc.).

1. Unless concealed application is indicated or required for sound, fire, air, or smoke ratings, coverage may be accomplished with scraps of not less than 8 sq. ft. in area.
2. Fit gypsum panels around ducts, pipes, and conduits.
3. Where partitions intersect structural members projecting below underside of floor/roof slabs and decks, cut gypsum panels to fit profile formed by structural members; allow 1/4- to 3/8-inch- wide joints to install sealant.

F. Isolate perimeter of gypsum board applied to non-load-bearing partitions at structural abutments, except floors. Provide 1/4- to 1/2-inch- wide spaces at these locations and trim edges with edge trim where edges of panels are exposed. Seal joints between edges and abutting structural surfaces with acoustical sealant.

G. Attachment to Steel Framing: Attach panels so leading edge or end of each panel is attached to open (unsupported) edges of stud flanges first.

H. STC-Rated Assemblies: Seal construction at perimeters, behind control joints, and at openings and penetrations with a continuous bead of acoustical sealant. Install acoustical sealant at both faces of partitions at perimeters and through penetrations. Comply with ASTM C 919 and with manufacturer's written recommendations for locating edge trim and closing off sound-flanking paths around or through assemblies, including sealing partitions above acoustical ceilings.

I. Install sound attenuation blankets before installing gypsum panels unless blankets are readily installed after panels have been installed on one side.

## 3.3 APPLYING INTERIOR GYPSUM BOARD

A. Single-Layer Application:

1. On partitions/walls, apply gypsum panels vertically (parallel to framing) unless otherwise indicated or required by fire-resistance-rated assembly, and minimize end joints.

   a. Stagger abutting end joints not less than one framing member in alternate courses of panels.

2. Fastening Methods: Apply gypsum panels to supports with steel drill screws.

B. Multilayer Application:

1. On partitions/walls, apply gypsum board indicated for base layers and face layers vertically (parallel to framing) with joints of base layers located over stud or furring member and face-layer joints offset at least one stud or furring member with base-layer joints, unless otherwise indicated or required by fire-resistance-rated assembly. Stagger joints on opposite sides of partitions.
2. Fastening Methods: Fasten base layers and face layers separately to supports with screws.

## 3.4 INSTALLING TRIM ACCESSORIES

A. General: For trim with back flanges intended for fasteners, attach to framing with same fasteners used for panels. Otherwise, attach trim according to manufacturer's written instructions.

B. Control Joints: Install control joints according to ASTM C 840 and in specific locations approved by Architect for visual effect.

C. Interior Trim: Install in the following locations:

1. Cornerbead: Use at outside corners.
2. LC-Bead: Use at exposed panel edges.
3. Curved-Edge Cornerbead: Use at curved openings.

## 3.5 FINISHING GYPSUM BOARD

A. General: Treat gypsum board joints, interior angles, edge trim, control joints, penetrations, fastener heads, surface defects, and elsewhere as required to prepare gypsum board surfaces for decoration. Promptly remove residual joint compound from adjacent surfaces.

B. Prefill open joints, rounded or beveled edges, and damaged surface areas.

C. Apply joint tape over gypsum board joints, except for trim products specifically indicated as not intended to receive tape.

D. Gypsum Board Finish Levels: Finish panels to levels indicated below and according to ASTM C 840:

1. Level 4: At panel surfaces that will be exposed to view unless otherwise indicated.

    a. Primer and its application to surfaces are specified in other Division 09 secitions.

E. Cementitious Backer Units: Finish according to manufacturer's written instructions.

3.6 PROTECTION

A. Protect adjacent surfaces from drywall compound and promptly remove from floors and other non-drywall surfaces. Repair surfaces stained, marred, or otherwise damaged during drywall application.

B. Protect installed products from damage from weather, condensation, direct sunlight, construction, and other causes during remainder of the construction period.

C. Remove and replace panels that are wet, moisture damaged, and mold damaged.

1. Indications that panels are wet or moisture damaged include, but are not limited to, discoloration, sagging, or irregular shape.
2. Indications that panels are mold damaged include, but are not limited to, fuzzy or splotchy surface contamination and discoloration.

END OF SECTION 092900

# SECTION 095113 - ACOUSTICAL PANEL CEILINGS

## PART 1 - GENERAL

### 1.1 RELATED DOCUMENTS

A. Drawings and general provisions of the Contract, including General and Supplementary Conditions and Division 01 Specification Sections, apply to this Section.

### 1.2 SUMMARY

A. Section includes acoustical panels and exposed suspension systems for ceilings.

### 1.3 PREINSTALLATION MEETINGS

A. Preinstallation Conference: Conduct conference at Project site.

### 1.4 ACTION SUBMITTALS

A. Product Data: For each type of product.

B. Samples for Verification: For each component indicated and for each exposed finish required, prepared on Samples of size indicated below.

1. Acoustical Panel: Set of 6-inch- square Samples of each type, color, pattern, and texture.
2. Exposed Suspension-System Members, Moldings, and Trim: Set of 6-inch- long Samples of each type, finish, and color.

### 1.5 CLOSEOUT SUBMITTALS

A. Maintenance Data: For finishes to include in maintenance manuals.

### 1.6 MAINTENANCE MATERIAL SUBMITTALS

A. Furnish extra materials that match products installed and that are packaged with protective covering for storage and identified with labels describing contents.

1. Acoustical Ceiling Panels: Full-size panels equal to 2 percent of quantity installed.
2. Suspension-System Components: Quantity of each exposed component equal to 2 percent of quantity installed.

## 1.7 QUALITY ASSURANCE

A. Testing Agency Qualifications: Qualified according to NVLAP for testing indicated.

## 1.8 DELIVERY, STORAGE, AND HANDLING

A. Deliver acoustical panels, suspension-system components, and accessories to Project site in original, unopened packages and store them in a fully enclosed, conditioned space where they will be protected against damage from moisture, humidity, temperature extremes, direct sunlight, surface contamination, and other causes.

B. Before installing acoustical panels, permit them to reach room temperature and a stabilized moisture content.

C. Handle acoustical panels carefully to avoid chipping edges or damaging units in any way.

## 1.9 FIELD CONDITIONS

A. Environmental Limitations: Do not install acoustical panel ceilings until spaces are enclosed and weatherproof, wet work in spaces is complete and dry, work above ceilings is complete, and ambient temperature and humidity conditions are maintained at the levels indicated for Project when occupied for its intended use.

1. Pressurized Plenums: Operate ventilation system for not less than 48 hours before beginning acoustical panel ceiling installation.

# PART 2 - PRODUCTS

## 2.1 PERFORMANCE REQUIREMENTS

A. Seismic Performance: Acoustical ceiling shall withstand the effects of earthquake motions determined according to ASCE/SEI 7.

B. Surface-Burning Characteristics: Comply with ASTM E 84; testing by a qualified testing agency. Identify products with appropriate markings of applicable testing agency.

1. Flame-Spread Index: Comply with ASTM E 1264 for Class A materials.
2. Smoke-Developed Index: 450 or less.

C. Fire-Resistance Ratings: Comply with ASTM E 119; testing by a qualified testing agency. Identify products with appropriate markings of applicable testing agency.

1. Indicate design designations from UL's "Fire Resistance Directory" or from the listings of another qualified testing agency.

2.2 ACOUSTICAL PANELS, GENERAL

A. Low-Emitting Materials: Acoustical panel ceilings shall comply with the testing and product requirements of the California Department of Health Services' "Standard Practice for the Testing of Volatile Organic Emissions from Various Sources Using Small-Scale Environmental Chambers."

B. Source Limitations:

1. Acoustical Ceiling Panel and Suspension System: Obtain each type from single source from single manufacturer.

C. Recycled Content: Postconsumer recycled content plus one-half of pre-consumer recycled content not less than 25 percent.

D. Glass-Fiber-Based Panels: Made with binder containing no urea formaldehyde.

E. Acoustical Panel Standard: Provide manufacturer's standard panels of configuration indicated that comply with ASTM E 1264 classifications as designated by types, patterns, acoustical ratings, and light reflectance unless otherwise indicated.

1. Mounting Method for Measuring NRC: Type E-400; plenum mounting in which face of test specimen is 15-3/4 inches away from test surface according to ASTM E 795.

2.3 ACOUSTICAL PANELS **ACP-1 (Classrooms)**

A. Products:

1. Beechwood E.S. and Etna E.S.: CertainTeed Corp.

a. HHF-457DP

2. Kae Avenue E.S.: Armstrong World Industries.

a. School Zone Fine Fissured 1713

B. Classification: Provide fire-resistance-rated panels complying with ASTM E 1264 for type, form, and pattern as follows:

1. Type and Form: Type III, mineral base with painted finish; Form 2, water felted.
2. Pattern: CE.

C. Color: White.

D. LR: Not less than 0.82.

E. NRC: Not less than 0.70.

F. CAC: Not less than 35.

G. Edge/Joint Detail: Square Thickness: 5/8 inch

H. Weight: 1.38 lbs/SF

I. Modular Size: 24 by 24 inches.

J. Broad Spectrum Antimicrobial Fungicide and Bactericide Treatment: Provide acoustical panels treated with manufacturer's standard antimicrobial formulation that inhibits fungus, mold, mildew, and gram-positive and gram-negative bacteria and showing no mold, mildew, or bacterial growth when tested according to ASTM D 3273 and evaluated according to ASTM D 3274 or ASTM G 21.

2.4 ACOUSTICAL PANELS **ACP-2 (Corridors)**

A. Products:

1. Beechwood E.S. and Etna E.S.: CertainTeed Corp.

a. FFSB-157.

2. Kae Avenue E.S.: Armstrong World Industries.

a. School Zone Fine Fissured 465.

B. Classification: Provide fire-resistance-rated panels complying with ASTM E 1264 for type, form, and pattern as follows:

1. Type and Form: Type III, mineral base with painted finish; Form 2, water felted.
2. Pattern: CE (perforated small holes and lightly textured).

C. Color: White.

D. LR: Not less than 0.84.

E. NRC: Not less than 0.55.

F. CAC: Not less than 35.

G. Edge/Joint Detail: Square.

H. Thickness: 5/8”

I. Weight: 1.05 lbs/SF

J. Modular Size: 24 by 24 inches.

K. Broad Spectrum Antimicrobial Fungicide and Bactericide Treatment: Provide acoustical panels treated with manufacturer's standard antimicrobial formulation that inhibits fungus, mold, mildew, and gram-positive and gram-negative bacteria and showing no mold, mildew, or

bacterial growth when tested according to ASTM D 3273 and evaluated according to ASTM D 3274 or ASTM G 21.

## 2.5 METAL SUSPENSION SYSTEMS, GENERAL

A. Metal Suspension-System Standard: Provide manufacturer's standard direct-hung metal suspension systems of types, structural classifications, and finishes indicated that comply with applicable requirements in ASTM C 635/C 635M.

B. Attachment Devices: Size for five times the design load indicated in ASTM C 635/C 635M, Table 1, "Direct Hung," unless otherwise indicated. Comply with seismic design requirements.

C. Wire Hangers, Braces, and Ties: Provide wires complying with the following requirements:

1. Zinc-Coated, Carbon-Steel Wire: ASTM A 641/A 641M, Class 1 zinc coating, soft temper.
2. Nickel-Copper-Alloy Wire: ASTM B 164, nickel-copper-alloy UNS No. N04400.
3. Size: Select wire diameter so its stress at three times hanger design load (ASTM C 635/C 635M, Table 1, "Direct Hung") will be less than yield stress of wire, but provide not less than 0.106-inch- diameter wire.

D. Hanger Rods: Mild steel, zinc coated or protected with rust-inhibitive paint.

E. Angle Hangers: Angles with legs not less than 7/8 inch wide; formed with 0.04-inch- thick, galvanized-steel sheet complying with ASTM A 653/A 653M, G90 coating designation; with bolted connections and 5/16-inch- diameter bolts.

## 2.6 METAL SUSPENSION SYSTEM

A. Manufacturers: Subject to compliance with requirements, provide products by one of the following:

1. Armstrong World Industries, Inc.
2. CertainTeed Corp.
3. Chicago Metallic Corporation.
4. USG Interiors, Inc.; Subsidiary of USG Corporation.

B. Wide-Face, Capped, Double-Web, Fire-Rated, Hot-Dip Galvanized, G60, Steel Suspension System: Main and cross runners roll formed from cold-rolled steel sheet; hot-dip galvanized according to ASTM A 653/A 653M, G60 coating designation; with prefinished, cold-rolled, 15/16-inch- wide aluminum caps on flanges.

1. Structural Classification: Heavy-duty system.
2. Face Design: Flat, flush.
3. Face Finish: Painted white.

# PART 3 - EXECUTION

## 3.1 EXAMINATION

A. Examine substrates, areas, and conditions, including structural framing to which acoustical panel ceilings attach or abut, with Installer present, for compliance with requirements specified in this and other Sections that affect ceiling installation and anchorage and with requirements for installation tolerances and other conditions affecting performance of acoustical panel ceilings.

B. Examine acoustical panels before installation. Reject acoustical panels that are wet, moisture damaged, or mold damaged.

C. Proceed with installation only after unsatisfactory conditions have been corrected.

## 3.2 PREPARATION

A. Measure each ceiling area and establish layout of acoustical panels to balance border widths at opposite edges of each ceiling. Avoid using less-than-half-width panels at borders, and comply with layout shown on reflected ceiling plans.

## 3.3 INSTALLATION

A. General: Install acoustical panel ceilings to comply with ASTM C 636/C 636M and seismic design requirements indicated, according to manufacturer's written instructions and CISCA's "Ceiling Systems Handbook."

B. Suspend ceiling hangers from building's structural members and as follows:

1. Install hangers plumb and free from contact with insulation or other objects within ceiling plenum that are not part of supporting structure or of ceiling suspension system.
2. Splay hangers only where required and to miss obstructions; offset resulting horizontal forces by bracing, countersplaying, or other equally effective means.
3. Where width of ducts and other construction within ceiling plenum produces hanger spacing that interfere with location of hangers at spacing required to support standard suspension-system members, install supplemental suspension members and hangers in form of trapezes or equivalent devices.
4. Secure wire hangers to ceiling-suspension members and to supports above with a minimum of three tight turns. Connect hangers directly either to structures or to inserts, eye screws, or other devices that are secure and appropriate for substrate and that will not deteriorate or otherwise fail due to age, corrosion, or elevated temperatures.
5. Secure flat, angle, channel, and rod hangers to structure, including intermediate framing members, by attaching to inserts, eye screws, or other devices that are secure and appropriate for both the structure to which hangers are attached and the type of hanger involved. Install hangers in a manner that will not cause them to deteriorate or fail due to age, corrosion, or elevated temperatures.

6. Do not support ceilings directly from permanent metal forms or floor deck. Fasten hangers to cast-in-place hanger inserts, post-installed mechanical or adhesive anchors, or power-actuated fasteners that extend through forms into concrete.
7. When steel framing does not permit installation of hanger wires at spacing required, install carrying channels or other supplemental support for attachment of hanger wires.
8. Do not attach hangers to steel deck tabs.
9. Do not attach hangers to steel roof deck. Attach hangers to structural members.
10. Space hangers not more than 48 inches o.c. along each member supported directly from hangers unless otherwise indicated; provide hangers not more than 8 inches from ends of each member.
11. Size supplemental suspension members and hangers to support ceiling loads within performance limits established by referenced standards and publications.

C. Secure bracing wires to ceiling suspension members and to supports with a minimum of four tight turns. Suspend bracing from building's structural members as required for hangers, without attaching to permanent metal forms, steel deck, or steel deck tabs. Fasten bracing wires into concrete with cast-in-place or post-installed anchors.

D. Install edge moldings and trim of type indicated at perimeter of acoustical ceiling area and where necessary to conceal edges of acoustical panels.

1. Apply acoustical sealant in a continuous ribbon concealed on back of vertical legs of moldings before they are installed.
2. Screw attach moldings to substrate at intervals not more than 16 inches o.c. and not more than 3 inches from ends, leveling with ceiling suspension system to a tolerance of 1/8 inch in 12 feet. Miter corners accurately and connect securely.
3. Do not use exposed fasteners, including pop rivets, on moldings and trim.

E. Install suspension-system runners so they are square and securely interlocked with one another. Remove and replace dented, bent, or kinked members.

F. Install acoustical panels with undamaged edges and fit accurately into suspension-system runners and edge moldings. Scribe and cut panels at borders and penetrations to provide a neat, precise fit.

1. Arrange directionally patterned acoustical panels as follows:

a. As indicated on reflected ceiling plans.

2. For square-edged panels, install panels with edges fully hidden from view by flanges of suspension-system runners and moldings.

## 3.4 FIELD QUALITY CONTROL

A. Perform the following tests and inspections of completed installations of acoustical panel ceiling hangers and anchors and fasteners in successive stages. Do not proceed with installations of acoustical panel ceiling hangers for the next area until test results for previously completed installations show compliance with requirements.

1. Extent of Each Test Area: When installation of ceiling suspension systems on each floor has reached 20 percent completion but no panels have been installed.

    a. Within each test area, testing agency will select one of every 10 power-actuated fasteners and post-installed anchors used to attach hangers to concrete and will test them for 200 lbf of tension; it will also select one of every two post-installed anchors used to attach bracing wires to concrete and will test them for 440 lbf of tension.
    b. When testing discovers fasteners and anchors that do not comply with requirements, testing agency will test those anchors not previously tested until 20 pass consecutively and then will resume initial testing frequency.

B. Acoustical panel ceiling hangers and anchors and fasteners will be considered defective if they do not pass tests and inspections.

C. Prepare test and inspection reports.

## 3.5 CLEANING

A. Clean exposed surfaces of acoustical panel ceilings, including trim, edge moldings, and suspension-system members. Comply with manufacturer's written instructions for cleaning and touchup of minor finish damage. Remove and replace ceiling components that cannot be successfully cleaned and repaired to permanently eliminate evidence of damage.

END OF SECTION 095113

# SECTION 096513 - RESILIENT BASE AND ACCESSORIES

## PART 1 - GENERAL

### 1.1 RELATED DOCUMENTS

A. Drawings and general provisions of the Contract, including General and Supplementary Conditions and Division 01 Specification Sections, apply to this Section.

### 1.2 SUMMARY

A. Section Includes:

1. Resilient base.
2. Resilient stair accessories.
3. Resilient molding accessories.

B. Related Sections:

1. Division 09 Section "Linoleum Flooring" for linoleum floor coverings.
2. Division 09 Section "Resilient Tile Flooring" for resilient floor tile.

### 1.3 SUBMITTALS

A. Product Data: For each type of product indicated.

1. Include stair nosing filler and adhesive information.

B. Samples for Verification: For each type of product indicated, in manufacturer's standard-size Samples but not less than 12 inches long, of each resilient product color, texture, and pattern required.

C. Maximum Specific Optical Density

1. ASTM E 662 (Smoke Generation) Maximum Optical Density of 450 or less.

### 1.4 QUALITY ASSURANCE

A. Fire-Test-Response Characteristics: As determined by testing identical products according to ASTM E 648 or NFPA 253 by a qualified testing agency.

1. Critical Radiant Flux Classification: Class I, not less than 0.45 W/sq. cm.

B. Source Limitations:

1. Wall base, resilient transitions and rubber floor tiles for stairwell management profiles shall be obtained from single source from single manufacturer.

## 1.5 DELIVERY, STORAGE, AND HANDLING

A. Store resilient products and installation materials in dry spaces protected from the weather, with ambient temperatures maintained within range recommended by manufacturer, but not less than 50 deg F or more than 90 deg F.

## 1.6 PROJECT CONDITIONS

A. Maintain ambient temperatures within range recommended by manufacturer, but not less than 70 deg F or more than 95 deg F, in spaces to receive resilient products during the following time periods:

1. 72 hours before installation.
2. During installation.
3. 72 hours after installation.

B. Until Final Completion, maintain ambient temperatures within range recommended by manufacturer, but not less than 55 deg F or more than 95 deg F.

C. Install resilient products after other finishing operations, including painting, have been completed.

## 1.7 EXTRA MATERIALS

A. Furnish extra materials that match products installed and that are packaged with protective covering for storage and identified with labels describing contents.

1. Furnish not less than 10 linear feet for every 500 linear feet or fraction thereof, of each type, color, pattern, and size of resilient product installed.

# PART 2 - PRODUCTS

## 2.1 RESILIENT BASE RB-1

A. Resilient Base:

1. Manufacturers: Subject to compliance with requirements, provide products by one of the following:

a. Johnsonite.
b. Nora Rubber Flooring; Freudenberg Building Systems, Inc.
c. Roppe Corporation, USA.

B. Resilient Base Standard: ASTM F 1861.

1. Material Requirement: Type TS (rubber, vulcanized thermoset) or Type TP (rubber, thermoplastic).
2. Manufacturing Method: Group I (solid, homogeneous).
3. Style: Cove (base with toe).

C. Minimum Thickness: 0.125 inch.

D. Height: 4 inches.

E. Lengths: Cut lengths 48 inches long or coils in manufacturer's standard length.

F. Outside Corners: Job formed or preformed.

G. Inside Corners: Job formed or preformed.

H. Finish: Matte.

I. Colors and Patterns: Match existing.

## 2.2 RESILIENT STAIR ACCESSORIES RSTA-1

A. Resilient Stair Treads:

1. Manufacturers: Subject to compliance with requirements, provide products by one of the following:

a. Johnsonite.
b. Nora Rubber Flooring; Freudenberg Building Systems, Inc.
c. Roppe Corporation, USA.

B. Resilient Stair Treads Standard: ASTM F 2169.

1. Material Requirement: Type TS (rubber, vulcanized thermo-set).
2. Surface Design:

a. Class 2, Pattern: Hammered.

3. Manufacturing Method: Group 2, tread with contrasting color for the visually impaired.

C. Nosing Style: Square, adjustable to cover angles between 60 and 90 degrees.

D. Nosing Height: 2 inches.

E. Thickness: 1/4 inch and tapered to back edge.

F. Size: Lengths and depths to fit each stair tread in one piece.

G. Risers: Smooth, flat, coved-toe, 7 inches high by length matching treads toeless, height and length to cover risers; produced by same manufacturer as treads and recommended by manufacturer for installation with treads.

1. Thickness: 0.125 inch.

H. Stringers: Of same thickness as risers, height and length after cutting to fit risers and treads and to cover stair stringers; produced by same manufacturer as treads and recommended by manufacturer for installation with treads.

I. Colors and Patterns: Match existing.

## 2.3 RESILIENT MOLDING ACCESSORY RT

A. Resilient Molding Accessory:

1. Manufacturers: Subject to compliance with requirements, provide products by one of the following:

a. Johnsonite.
b. Roppe Corporation, USA.
c. Nora Rubber Flooring.

B. Description: Carpet edge for glue-down applications, Reducer strip for resilient floor covering, Joiner for tile and carpet, transition strips.

C. Material: vinyl or rubber.

D. Profile and Dimensions: Profiles provide as a basis-of-design

1. Carpet to resilient flooring: Johnsonite / CTA-XX-D
2. Resilient to sealed concrete. Johnsonite / SSR-XX-B

E. Colors and Patterns: Match existing.

## 2.4 INSTALLATION MATERIALS

A. Trowelable Leveling and Patching Compounds: Latex-modified, portland cement based or blended hydraulic-cement-based formulation provided or approved by manufacturer for applications indicated.

B. Adhesives: Water-resistant type recommended by manufacturer to suit resilient products and substrate conditions indicated.

1. Use adhesives that comply with the following limits for VOC content when calculated according to 40 CFR 59, Subpart D (EPA Method 24):

a. Cove Base Adhesives: Not more than 50 g/L.
b. Rubber Floor Adhesives: Not more than 60 g/L.

C. Stair-Tread-Nose Filler: Two-part epoxy compound recommended by resilient tread manufacturer to fill nosing substrates that do not conform to tread contours.

## PART 3 - EXECUTION

### 3.1 EXAMINATION

A. Examine substrates, with Installer present, for compliance with requirements for maximum moisture content and other conditions affecting performance of the Work.

B. Verify that finishes of substrates comply with tolerances and other requirements specified in other Sections and that substrates are free of cracks, ridges, depressions, scale, and foreign deposits that might interfere with adhesion of resilient products.

C. Proceed with installation only after unsatisfactory conditions have been corrected.

### 3.2 PREPARATION

A. Prepare substrates according to manufacturer's written instructions to ensure adhesion of resilient products.

B. Concrete Substrates for Resilient Stair Treads and Accessories: Prepare according to ASTM F 710.

1. Verify that substrates are dry and free of curing compounds, sealers, and hardeners.
2. Remove substrate coatings and other substances that are incompatible with adhesives and that contain soap, wax, oil, or silicone, using mechanical methods recommended by manufacturer. Do not use solvents.
3. Alkalinity and Adhesion Testing: Perform tests recommended by manufacturer.
4. Moisture Testing: Perform tests recommended by manufacturer and as follows. Proceed with installation only after substrates pass testing.

    a. Perform anhydrous calcium chloride test, ASTM F 1869. Proceed with installation only after substrates have maximum moisture-vapor-emission rate of 3 lb of water/1000 sq. ft. in 24 hours.
    b. Perform relative humidity test using in situ probes, ASTM F 2170. Proceed with installation only after substrates have maximum 75 percent relative humidity level measurement.

C. Fill cracks, holes, and depressions in substrates with trowelable leveling and patching compound and remove bumps and ridges to produce a uniform and smooth substrate.

D. Do not install resilient products until they are same temperature as the space where they are to be installed.

1. Move resilient products and installation materials into spaces where they will be installed at least 48 hours in advance of installation.

E. Sweep and vacuum clean substrates to be covered by resilient products immediately before installation.

## 3.3 RESILIENT BASE INSTALLATION

A. Comply with manufacturer's written instructions for installing resilient base.

B. Apply resilient base to walls, columns, pilasters, casework and cabinets in toe spaces, and other permanent fixtures in rooms and areas where base is required.

C. Install resilient base in lengths as long as practicable without gaps at seams and with tops of adjacent pieces aligned.

D. Tightly adhere resilient base to substrate throughout length of each piece, with base in continuous contact with horizontal and vertical substrates.

E. Do not stretch resilient base during installation.

F. On masonry surfaces or other similar irregular substrates, fill voids along top edge of resilient base with manufacturer's recommended adhesive filler material.

G. Preformed Corners: Install preformed corners before installing straight pieces.

H. Job-Formed Corners:

1. Outside Corners: Use straight pieces of maximum lengths possible. Form without producing discoloration (whitening) at bends.
2. Inside Corners: Use straight pieces of maximum lengths possible.

## 3.4 RESILIENT ACCESSORY INSTALLATION

A. Comply with manufacturer's written instructions for installing resilient accessories.

B. Resilient Stair Accessories:

1. Use stair-tread-nose filler to fill nosing substrates that do not conform to tread contours.
2. Tightly adhere to substrates throughout length of each piece.
3. For treads installed as separate, equal-length units, install to produce a flush joint between units.

C. Resilient Molding Accessories: Butt to adjacent materials and tightly adhere to substrates throughout length of each piece. Install reducer strips at edges of carpet and resilient floor covering that would otherwise be exposed.

## 3.5 CLEANING AND PROTECTION

A. Comply with manufacturer's written instructions for cleaning and protection of resilient products.

B. Perform the following operations immediately after completing resilient product installation:

1. Remove adhesive and other blemishes from exposed surfaces.
2. Sweep and vacuum surfaces thoroughly.
3. Damp-mop surfaces to remove marks and soil.

C. Protect resilient products from mars, marks, indentations, and other damage from construction operations and placement of equipment and fixtures during remainder of construction period.

D. Cover resilient products until Final Completion.

END OF SECTION 096513

# SECTION 096519 - RESILIENT TILE FLOORING

## PART 1 - GENERAL

### 1.1 RELATED DOCUMENTS

A. Drawings and general provisions of the Contract, including General and Supplementary Conditions and Division 01 Specification Sections, apply to this Section.

### 1.2 SUMMARY

A. Section Includes:

1. Vinyl composition floor tile.

2. Leveling compound under all floor tile.

### 1.3 ACTION SUBMITTALS

A. Product Data: For each type of product.

### 1.4 INFORMATIONAL SUBMITTALS

A. Qualification Data: For Installer.

### 1.5 MAINTENANCE MATERIAL SUBMITTALS

A. Furnish extra materials that match products installed and that are packaged with protective covering for storage and identified with labels describing contents.

1. Floor Tile: Furnish one box of each type, color, and pattern of floor tile installed.

### 1.6 QUALITY ASSURANCE

A. Installer Qualifications: A qualified installer who employs workers for this Project who are competent in techniques required by manufacturer for floor tile installation and seaming method indicated.

1. Engage an installer who employs workers for this Project who are trained or certified by floor tile manufacturer for installation techniques required.

### 1.7 DELIVERY, STORAGE, AND HANDLING

A. Store floor tile and installation materials in dry spaces protected from the weather, with ambient temperatures maintained within range recommended by manufacturer, but not less than 50 deg F or more than 90 deg F. Store floor tiles on flat surfaces.

1.8 FIELD CONDITIONS

A. Maintain ambient temperatures within range recommended by manufacturer, but not less than 70 deg F or more than 95 deg F, in spaces to receive floor tile during the following time periods:

1. 48 hours before installation.
2. During installation.
3. 48 hours after installation.

B. After installation and until Final Completion, maintain ambient temperatures within range recommended by manufacturer, but not less than 55 deg F or more than 95 deg F.

C. Close spaces to traffic during floor tile installation.

D. Close spaces to traffic for 48 hours after floor tile installation.

E. Install floor tile after other finishing operations, including painting, have been completed.

PART 2 - PRODUCTS

2.1 PERFORMANCE REQUIREMENTS

A. Fire-Test-Response Characteristics: For resilient tile flooring, as determined by testing identical products according to ASTM E 648 or NFPA 253 by a qualified testing agency.

1. Critical Radiant Flux Classification: Class I, not less than 0.45 W/sq. cm.

2.2 PRODUCTS

A. Kae Avenue E.S.: Mannington

1. Essentials

2.3 VINYL COMPOSITION FLOOR TILE

A. Tile Standard: ASTM F 1066, Class 1, solid-color tile.

B. Wearing Surface: Smooth.

C. Thickness: 0.125 inch.

D. Size: 12 by 12 inches.

E. Colors and Patterns:

1. VCT-1 – Oyster White #131
2. VCT-2 – Moss #235
3. VCT-3 – Banana Cream #213
4. VCT-4 – New Geranium #228

## 2.4 INSTALLATION MATERIALS

A. Trowelable Leveling and Patching Compounds: Latex-modified, portland cement based or blended hydraulic-cement-based formulation provided or approved by floor tile manufacturer for applications indicated.

B. Adhesives: Water-resistant type recommended by floor tile and adhesive manufacturers to suit floor tile and substrate conditions indicated.

# PART 3 - EXECUTION

## 3.1 EXAMINATION

A. Examine substrates, with Installer present, for compliance with requirements for maximum moisture content and other conditions affecting performance of the Work.

1. Verify that finishes of substrates comply with tolerances and other requirements specified in other Sections and that substrates are free of cracks, ridges, depressions, scale, and foreign deposits that might interfere with adhesion of floor tile.

B. Proceed with installation only after unsatisfactory conditions have been corrected.

## 3.2 PREPARATION

A. Prepare substrates according to floor tile manufacturer's written instructions to ensure adhesion of resilient products.

B. Concrete Substrates: Prepare according to ASTM F 710.

1. Verify that substrates are dry and free of curing compounds, sealers, and hardeners.
2. Remove substrate coatings and other substances that are incompatible with adhesives and that contain soap, wax, oil, or silicone, using mechanical methods recommended by floor tile manufacturer. Do not use solvents.
3. Alkalinity and Adhesion Testing: Perform tests recommended by floor tile manufacturer. Proceed with installation only after substrate alkalinity falls within range on pH scale recommended by manufacturer in writing, but not less than 5 or more than 9 pH.
4. Moisture Testing: Proceed with installation only after substrates pass testing according to floor tile manufacturer's written recommendations, but not less stringent than the following:

a. Perform anhydrous calcium chloride test according to ASTM F 1869. Proceed with installation only after substrates have maximum moisture-vapor-emission rate of 3 lb of water/1000 sq. ft. in 24 hours.
b. Perform relative humidity test using in situ probes according to ASTM F 2170. Proceed with installation only after substrates have a maximum 75 percent relative humidity level.

C. INSTALL TOWELABLE LEVELING AND PATCHING COMPOUND AT ENTIRE CONCRETE FLOOR TO RECEIVE RESILIENT TILE FLOORING. Remove bumps and ridges to produce a uniform and smooth substrate.

D. Do not install floor tiles until they are the same temperature as the space where they are to be installed.

1. At least 48 hours in advance of installation, move resilient floor tile and installation materials into spaces where they will be installed.

E. Immediately before installation, sweep and vacuum clean substrates to be covered by resilient floor tile.

3.3 FLOOR TILE INSTALLATION

A. Comply with manufacturer's written instructions for installing floor tile.

B. Lay out floor tiles from center marks established with principal walls, discounting minor offsets, so tiles at opposite edges of room are of equal width. Adjust as necessary to avoid using cut widths that equal less than one-half tile at perimeter.

1. Lay tiles to match existing.

C. Match floor tiles for color and pattern by selecting tiles from cartons in the same sequence as manufactured and packaged, if so numbered. Discard broken, cracked, chipped, or deformed tiles.

1. Lay tiles to match existing.

D. Scribe, cut, and fit floor tiles to butt neatly and tightly to vertical surfaces and permanent fixtures including built-in furniture, cabinets, pipes, outlets, and door frames.

E. Extend floor tiles into toe spaces, door reveals, closets, and similar openings. Extend floor tiles to center of door openings.

F. Maintain reference markers, holes, and openings that are in place or marked for future cutting by repeating on floor tiles as marked on substrates. Use chalk or other nonpermanent marking device.

G. Adhere floor tiles to flooring substrates using a full spread of adhesive applied to substrate to produce a completed installation without open cracks, voids, raising and puckering at joints, telegraphing of adhesive spreader marks, and other surface imperfections.

## 3.4 CLEANING AND PROTECTION

A. Comply with manufacturer's written instructions for cleaning and protecting floor tile.

B. Perform the following operations immediately after completing floor tile installation:

1. Remove adhesive and other blemishes from exposed surfaces.
2. Sweep and vacuum surfaces thoroughly.
3. Damp-mop surfaces to remove marks and soil.

C. Protect floor tile from mars, marks, indentations, and other damage from construction operations and placement of equipment and fixtures during remainder of construction period.

D. Cover floor tile until Final Completion.

END OF SECTION 096519

# SECTION 096543 - LINOLEUM FLOORING

## PART 1 - GENERAL

### 1.1 RELATED DOCUMENTS

A. Drawings and general provisions of the Contract, including General and Supplementary Conditions and Division 01 Specification Sections, apply to this Section.

### 1.2 SUMMARY

A. Section Includes:

1. Linoleum Tile Flooring.

B. Related Sections:

1. Division 09 Section "Resilient Base and Accessories" for resilient base, reducer strips, and other accessories installed with linoleum floor covering.
2. Division 09 Section "Tile Carpeting" for resilient floor coverings designed to control electrostatic discharge.

### 1.3 SUBMITTALS

A. Product Data: For each type of product indicated.

1. Dry room film information.
2. Adhesive information.

B. Samples for Verification: In manufacturer's standard size, but not less than 20 x 20-inch sections of each color and pattern of floor covering required.

C. Qualification Data: For qualified Installer.

D. Maintenance Data: For each type of floor covering to include in maintenance manuals.

E. Concrete Moisture: ASTM F 1869.

F. Concrete Alkalinity: Meeting manufacturer’s requirements.

### 1.4 QUALITY ASSURANCE

A. Installer Qualifications: A qualified installer who employs workers for this Project who are competent in techniques required by manufacturer for floor covering installation.

1. Engage an installer who employs workers for this Project who are trained or certified by manufacturer for installation techniques required.

B. Fire-Test-Response Characteristics: As determined by testing identical products according to ASTM E 648 or NFPA 253 by a qualified testing agency.

1. Critical Radiant Flux Classification: Class I, not less than 0.45 W/sq. cm.

C. Maximum Specific Optical Density

1. ASTM E 662 (Smoke Generation) Maximum Optical Density of 450 or less.

## 1.5 DELIVERY, STORAGE, AND HANDLING

A. Store floor coverings and installation materials in dry spaces protected from the weather, with ambient temperatures maintained within range recommended by manufacturer, but not less than 65 deg F or more than 90 deg F.

## 1.6 PROJECT CONDITIONS

A. Maintain ambient temperatures within range recommended by manufacturer, but not less than 70 deg F or more than 95 deg F, in spaces to receive floor coverings during the following time periods:

1. 72 hours before installation.
2. During installation.
3. 72 hours after installation.

B. Until Final Completion, maintain ambient temperatures within range recommended by manufacturer, but not less than 55 deg F or more than 95 deg F.

C. Close spaces to traffic during floor covering installation.

D. Close spaces to traffic for 72 hours after floor covering installation.

E. Install floor coverings after other finishing operations, including painting, have been completed.

## 1.7 EXTRA MATERIALS

A. Furnish extra materials that match products installed and that are packaged with protective covering for storage and identified with labels describing contents.

1. Tile Flooring: Furnish one box for each color.

## PART 2 - PRODUCTS

### 2.1 MANUFACTURERS

A. Products:

1. Beechwood E.S.: Forbo

   a. LIN-1: Marmoleum 20” x 20” dual tile, t2607, Color: White Marble.
   b. LIN-2: Marmoleum 20” x 20” dual tile, t3224, Color: Chartreuse.
   c. LIN-3: Marmoleum 20” x 20” dual tile, t2795, Color: Butter.
   d. LIN-4: Marmoleum 20” x 20” dual tile, t3055, Color: Fresco Blue.
   e. LIN-5: Marmoleum 20” x 20” dual tile, t2767, Color: Rust.

2. Etna E.S.: Forbo

   a. LIN-1: Marmoleum 20” x 20” dual tile, t2607, Color: White Marble.
   b. LIN-2: Marmoleum 20” x 20” dual tile, t3223, Color: Emerald.
   c. LIN-3: Marmoleum 20” x 20” dual tile, t2795, Color: Butter.
   d. LIN-4: Marmoleum 20” x 20” dual tile, t3228, Color: Red Amaranth.
   e. LIN-5: Marmoleum 20” x 20” dual tile, t3218, Color: Deep Ocean.

### 2.2 LINOLEUM FLOOR COVERING

A. Tile Flooring: ASTM F 2195, Type I, linoleum tile with fibrous backing.

1. Tile Size: 20” x 20”.

B. Thickness: 2.5 mm.

### 2.3 INSTALLATION MATERIALS

A. Trowelable Leveling and Patching Compounds: Latex-modified, portland cement based or blended hydraulic-cement-based formulation provided or approved by manufacturer for applications indicated.

B. Adhesives: Water-resistant type recommended by manufacturer to suit products and substrate conditions indicated.

1. Use adhesives that have a VOC content of not more than 50 g/L when calculated according to 40 CFR 59, Subpart D (EPA Method 24).

C. Floor Polish: Provide protective liquid floor polish products as recommended by manufacturer.

# PART 3 - EXECUTION

## 3.1 EXAMINATION

A. Examine substrates, with Installer present, for compliance with requirements for maximum moisture content and other conditions affecting performance of the Work.

B. Verify that finishes of substrates comply with tolerances and other requirements specified in other Sections and that substrates are free of cracks, ridges, depressions, scale, and foreign deposits that might interfere with adhesion of floor coverings.

C. Proceed with installation only after unsatisfactory conditions have been corrected.

## 3.2 PREPARATION

A. Prepare substrates according to manufacturer's written instructions to ensure adhesion of floor coverings.

B. Concrete Substrates: Prepare according to ASTM F 710.

1. Verify that substrates are dry and free of curing compounds, sealers, and hardeners.
2. Remove substrate coatings and other substances that are incompatible with floor covering adhesives and that contain soap, wax, oil, or silicone, using mechanical methods recommended by manufacturer. Do not use solvents.
3. Alkalinity and Adhesion Testing: Perform tests recommended by manufacturer. Proceed with installation only after substrates pass testing.
4. Moisture Testing: Perform tests recommended by manufacturer and as follows. Proceed with installation only after substrates pass testing.

    a. Perform anhydrous calcium chloride test, ASTM F 1869. Proceed with installation only after substrates have maximum moisture-vapor-emission rate of 3 lb of water/1000 sq. ft. in 24 hours.
    b. Perform relative humidity test using in situ probes, ASTM F 2170. Proceed with installation only after substrates have maximum 75 percent relative humidity level measurement.

C. Fill cracks, holes, and depressions in substrates with trowelable leveling and patching compound and remove bumps and ridges to produce a uniform and smooth substrate.

D. Do not install floor coverings until they are same temperature as space where they are to be installed.

1. Move floor coverings and installation materials into spaces where they will be installed at least 72 hours in advance of installation.

E. Sweep and vacuum clean substrates to be covered by floor coverings immediately before installation.

## 3.3 INSTALLATION, GENERAL

A. Comply with manufacturer's written instructions for installing floor coverings.

B. Scribe and cut floor coverings to butt neatly and tightly to vertical surfaces, and built-in furniture including cabinets.

C. Extend floor coverings into toe spaces and door reveals.

D. Maintain reference markers, holes, or openings that are in place or marked for future cutting by repeating on floor coverings as marked on subfloor. Use chalk or other nonpermanent marking device.

E. Adhere floor coverings to substrates using a full spread of adhesive applied to substrate to produce a completed installation without open cracks, voids, raising and puckering at joints, telegraphing of adhesive spreader marks, and other surface imperfections.

## 3.4 LINOLEUM FLOOR TILE INSTALLATION

A. Lay out linoleum floor tiles from center marks established with principal walls, discounting minor offsets, so floor tiles at opposite edges of room are of equal width. Adjust as necessary to avoid suing cut widths that equal less than one-half tile at perimeter.

1. Lay floor tiles square with room axis.

B. Match linoleum floor tiles for color and pattern by selecting tiles from cartons in same sequence as manufactured and packaged, if so numbered. Discard broken, cracked, chipped, or deformed floor tiles.

1. Lay floor tiles to match existing.

## 3.5 CLEANING AND PROTECTION

A. Comply with manufacturer's written instructions for cleaning and protection of floor coverings.

B. Perform the following operations immediately after completing floor covering installation:

1. Remove adhesive and other blemishes from exposed surfaces.
2. Sweep and vacuum surfaces thoroughly.
3. Damp-mop surfaces to remove marks and soil.

C. Protect floor coverings from mars, marks, indentations, and other damage from construction operations and placement of equipment and fixtures during remainder of construction period.

D. Floor Polish: Remove soil, visible adhesive, and surface blemishes from floor coverings before applying liquid floor polish.

1. Apply manufacturers recommended number of coat(s).

E. After allowing drying room film (yellow film caused by linseed oil oxidation) to disappear, cover floor coverings until Final Completion.

END OF SECTION 096543

# SECTION 096813 - TILE CARPETING

## PART 1 - GENERAL

### 1.1 RELATED DOCUMENTS

A. Drawings and general provisions of the Contract, including General and Supplementary Conditions and Division 01 Specification Sections, apply to this Section.

### 1.2 SUMMARY

A. Section includes modular, fusion-bonded carpet tile.

B. Related Requirements:

1. Division 09 Sections "Resilient Base and Accessories and Resilient Tile Flooring" for resilient wall base and accessories installed with carpet tile.

### 1.3 PREINSTALLATION MEETINGS

A. Preinstallation Conference: Conduct conference at Project site.

1. Review methods and procedures related to carpet tile installation including, but not limited to, the following:

a. Review delivery, storage, and handling procedures.
b. Review ambient conditions and ventilation procedures.
c. Review subfloor preparation procedures.
d. Review subfloor moisture content per ASTM F1869.
e. Review subfloor alkalinity.

### 1.4 ACTION SUBMITTALS

A. Product Data: For each type of product.

1. Include manufacturer's written data on physical characteristics, durability, and fade resistance.
2. Include installation recommendations for each type of substrate.

B. Shop Drawings: Show the following:

1. Doorways, enclosing walls or partitions, built-in cabinets, and locations where cutouts are required in carpet tiles.
2. Carpet tile type, color, and dye lot.

3. Type of subfloor.
4. Type of installation.
5. Pattern of installation.
6. Pattern type, location, and direction.
7. Type, color, and location of insets and borders.
8. Type, color, and location of edge, transition, and other accessory strips.
9. Transition details to other flooring materials.
10. Quantity of extra materials.

C. Sustainability: Provide the Statement of the Achievement Level the carpet has attained for Platinum 71+, based on specific Sustainable Attribute Performance for all product stages according to ANSI/NSF 140.

D. Subfloor moisture content prior to installation.

E. Subfloor alkalinity documentation.

## 1.5 INFORMATIONAL SUBMITTALS

A. Qualification Data: For Installer stating years of experience.

B. Sample Warranty: For special warranty.

## 1.6 CLOSEOUT SUBMITTALS

A. Maintenance Data: For carpet tiles to include in maintenance manuals. Include the following:

1. Methods for maintaining carpet tile, including cleaning and stain-removal products and procedures and manufacturer's recommended maintenance schedule.
2. Precautions for cleaning materials and methods that could be detrimental to carpet tile.

B. Warranty.

## 1.7 MAINTENANCE MATERIAL SUBMITTALS

A. Furnish extra materials, from the same product run, that match products installed and that are packaged with protective covering for storage and identified with labels describing contents.

1. Carpet Tile: Full-size units equal to 5 percent of amount installed for each type indicated, but not less than 10 sq. yd.

## 1.8 QUALITY ASSURANCE

A. Installer Qualifications: An experienced installer who is certified by the International Certified Floor covering Installers Association at the Master II certification level.

B. Source limitations for all carpet materials:

1. Obtain all carpet from one dye lot to complete the project including extra materials. All color of carpets are to be from the source manufacturer to maintain warranty.

C. Source limitations for other products: Obtain all installation adhesives from one in the same manufacturer and meeting carpet manufacturer's requirements.

1.9 DELIVERY, STORAGE, AND HANDLING

A. Comply with CRI 104.

1.10 FIELD CONDITIONS

A. Comply with CRI 104 for temperature, humidity, and ventilation limitations.

B. Environmental Limitations: Do not deliver or install carpet tiles until spaces are enclosed and weather-tight, wet work in spaces is complete and dry, and ambient temperature and humidity conditions are maintained at occupancy levels during the remainder of the construction period.

C. Do not install carpet tiles over concrete slabs until slabs have cured and are sufficiently dry to bond with adhesive and concrete slabs have pH range recommended by carpet tile manufacturer.

D. Where demountable partitions or other items are indicated for installation on top of carpet tiles, install carpet tiles before installing these items.

1.11 WARRANTY

A. Special Warranty for Carpet Tiles: Manufacturer agrees to repair or replace components of carpet tile installation that fail in materials or workmanship within specified warranty period.

1. Warranty does not include deterioration or failure of carpet tile due to unusual traffic, failure of substrate, vandalism, or abuse.
2. Failures include, but are not limited to, more than 10 percent edge raveling, snags, runs, dimensional stability, excess static discharge, loss of tuft bind strength, loss of face fiber, and delamination.
3. Warranty Period: 10 years from date of Final Completion.

PART 2 - PRODUCTS

2.1 CARPET TILE

A. Products

1. Beechwood E.S.: Interface Flor

a. Color – 2700 Otera.
b. Pattern – Kamala Ni.

2. Etna E.S.: Interface Flor

a. Color – 7230 Yucca.
b. Pattern – Entropy.

3. Kae Avenue E.S.: Interface Flor

a. Color – 7256 Kaleidescope
b. Pattern – Cubic.

B. Fiber Content: Dupont Antron Lumena nylon

C. Fiber Type: 100% Solution Dyed

D. Pile Characteristic: Tufted Textured loop pile.

E. Density: 6291 oz./cu. yd.

F. Pile Thickness: .103 for finished carpet tile according to ASTM D 6859

G. Stitches: 10 / per inch

H. Gage: 1/12 ends per inch

I. Surface Pile Weight: 18 oz./sq. yd.

J. Total Height: .15 in. for finished carpet tile.

K. Backing System: GlasBac RE.

L. Size: 19.69 in x19.69 in

M. Applied Soil-Resistance Treatment: Manufacturer's standard material/ ProTekt

N. Antimicrobial Treatment: Manufacturer's standard material/ Intersept

O. Performance Characteristics: As follows:

1. Appearance Retention Rating: Heavy traffic, 3.0 minimum according to ASTM D 7330.
2. Critical Radiant Flux Classification: Not less than 0.45 W/sq. cm.
3. Dry Breaking Strength: Not less than 100 lbf according to ASTM D 2646.
4. Tuft Bind: Not less than 20 lbf according to ASTM D 1335.
5. Dimensional Tolerance: Within 1/32 inch of specified size dimensions, as determined by physical measurement.
6. Dimensional Stability: 0.2 percent or less according to ISO 2551 (Aachen Test).
7. Resistance to Insects: Comply with AATCC 24.
8. Colorfastness to Crocking: Not less than 4, wet and dry, according to AATCC 165.

9. Colorfastness to Light: Not less than 4 after 60 AFU (AATCC fading units) according to AATCC 16, Option E.
10. Antimicrobial Activity: Not less than 2-mm halo of inhibition for gram-positive bacteria, not less than 1-mm halo of inhibition for gram-negative bacteria, and no fungal growth, according to AATCC 174 Parts 2&3.
11. Electrostatic Propensity: Less than 3.5 kV according to AATCC 134.
12. Emissions: Provide carpet tile that complies with testing and product requirements of CRI's "Green Label Plus" program.

## 2.2 INSTALLATION ACCESSORIES

A. Trowelable Leveling and Patching Compounds: Latex-modified, hydraulic-cement-based formulation provided or recommended by carpet tile manufacturer.

# PART 3 - EXECUTION

## 3.1 EXAMINATION

A. Examine substrates, areas, and conditions, with Installer present, for compliance with requirements for maximum moisture content, alkalinity range, installation tolerances, and other conditions affecting carpet tile performance. Examine carpet tile for type, color, pattern, and potential defects.

B. Concrete Subfloors: Verify that concrete slabs comply with ASTM F 710 and the following:

1. Slab substrates are dry and free of curing compounds, sealers, hardeners, and other materials that may interfere with adhesive bond. Determine adhesion and dryness characteristics by performing bond and moisture tests recommended by carpet tile manufacturer.
2. Subfloor finishes comply with requirements specified in Division 03 Section "Cast-in-Place Concrete" for slabs receiving carpet tile.
3. Subfloors are free of cracks, ridges, depressions, scale, and foreign deposits.

C. Proceed with installation only after unsatisfactory conditions have been corrected.

## 3.2 PREPARATION

A. General: Comply with CRI 104, Section 6.2, "Site Conditions; Floor Preparation," and with carpet tile manufacturer's written installation instructions for preparing substrates indicated to receive carpet tile installation.

B. Use trowelable leveling and patching compounds, according to manufacturer's written instructions, to fill cracks, holes, depressions, and protrusions in substrates. Fill or level cracks, holes and depressions 1/8 inch wide or wider and protrusions more than 1/32 inch unless more stringent requirements are required by manufacturer's written instructions.

C. Remove coatings, including curing compounds, and other substances that are incompatible with adhesives and that contain soap, wax, oil, or silicone, without using solvents. Use mechanical methods recommended in writing by carpet tile manufacturer.

D. Clean metal substrates of grease, oil, soil and rust, and prime if directed by adhesive manufacturer. Rough sand painted metal surfaces and remove loose paint. Sand aluminum surfaces, to remove metal oxides, immediately before applying adhesive.

E. Broom and vacuum clean substrates to be covered immediately before installing carpet tile.

## 3.3 INSTALLATION

A. General: Comply with CRI 104, Section 14, "Carpet Modules," and with carpet tile manufacturer's written installation instructions.

B. Installation Method: As recommended in writing by carpet tile manufacturer.

C. Maintain dye lot integrity. Do not mix dye lots in same area.

D. Cut and fit carpet tile to butt tightly to vertical surfaces, permanent fixtures, and built-in furniture including cabinets, pipes, outlets, edgings, thresholds, and nosings. Bind or seal cut edges as recommended by carpet tile manufacturer.

E. Extend carpet tile into toe spaces, door reveals, and similar openings.

F. Maintain reference markers, holes, and openings that are in place or marked for future cutting by repeating on finish flooring as marked on subfloor. Use nonpermanent, non-staining marking device.

G. Install pattern parallel to walls.

## 3.4 CLEANING AND PROTECTION

A. Perform the following operations immediately after installing carpet tile:

1. Remove yarns that protrude from carpet tile surface.
2. Vacuum carpet tile using commercial machine with face-beater element.

B. Protect installed carpet tile to comply with CRI 104, Section 16, "Protecting Indoor Installations."

C. Protect carpet tile against damage from construction operations and placement of equipment and fixtures during the remainder of construction period. Use protection methods indicated or recommended in writing by carpet tile manufacturer.

END OF SECTION 096813

# SECTION 099000 – PAINTING AND COATINGS

## PART 1 – GENERAL

### 1.1 RELATED DOCUMENTS

A. Drawings and general provisions of the Contract, including General and Supplementary Conditions and Division 01Specification Sections, apply to this Section.

### 1.2 SUMMARY

A. This Section includes surface preparation, painting, and finishing of exposed interior and exterior items and surfaces. Work includes:

1. Surface preparation, priming, and finish coats specified in this section are in addition to shop priming and surface treatment specified under other sections.
2. Labor, materials, scaffolding, tools, and equipment necessary to complete painting, filling, and sealing requirements of the project as indicated on the drawings and as specified.

B. Exterior items include, but are not limited to:

1. Exposed lintels and ferrous metals.

C. Interior items include, but are not limited to:

1. Refer to Room Finish Schedule, remarks and notes on Architectural Drawings for general areas requiring painting. Areas indicated as exposed shall be fully painted.
2. Concrete unit masonry.
3. Gypsum board.
4. Hollow metal frames and doors.
5. Exposed metals.

D. Paint exposed surfaces designated in Room Finish Schedule, except where a surface or material is specifically indicated not to be painted or is to remain natural. Where an item or surface is not specifically mentioned, paint the same as similar adjacent materials or surfaces. If color or finish is not designated, the Architect will select from standard colors or finishes available.

### 1.3 SUBMITTALS

A. Submit product data, manufacturer's technical information, label analysis, and application instructions for each material proposed for use.

1. List each material and cross-reference the specific coating and finish system and application. Identify each material by the manufacturer's catalog number and general classification.

B. Submit color samples.

## 1.4 QUALITY ASSURANCE

A. Provide primers and undercoat paint produced by same manufacturer as finish coat.

B. Provide manufacturer's best quality trade sale paint material of the various coating types specified. Paint material containers not displaying manufacturer's product identification will not be acceptable.

1. Proprietary names used to designate colors or materials are not intended to imply that products named are required or to exclude products of other manufacturers.

## 1.5 DELIVERY, STORAGE, AND HANDLING

A. Deliver materials to the job site in the manufacturer's original, unopened packages and containers bearing manufacturer's name and label and the following information:

1. Product name or title of material.
2. Product description (generic classification or binder type).
3. Federal Specification number, if applicable.
4. Manufacturer's stock number and date of manufacturer.
5. Contents by volume, for pigment and vehicle constituents.
6. Thinning instructions.
7. Application instructions.
8. Color name and number.

B. Store materials not in use in tightly covered containers in a well-ventilated area at a minimum ambient temperature of 45 degrees F. Maintain containers used in storage in a clean condition, free of foreign materials and residue.

1. Protect from freezing. Keep storage area neat and orderly. Remove oily rags and waste daily. Take necessary measures to ensure workers and work areas are protected from fire and health hazards resulting from handling, mixing, and application.

## 1.6 PROJECT CONDITIONS

A. Apply water-based paints only when the temperature of surfaces to be painted and surrounding air temperatures are between 50 degrees F and 90 degrees F.

B. Apply solvent-thinned paints only when the temperature of surfaces to be painted and surrounding air temperatures are between 45 degrees F and 95 degrees F.

C. Do not apply paint in snow, rain, fog, or mist, when the relative humidity exceeds 85 percent, at temperatures less than 5 degrees F above dew point, or to damp or wet surfaces.

1. Painting may continue during inclement weather if surfaces and areas to be painted are enclosed and heated within temperature limits specified by the manufacturer during application and drying periods.

## PART 2 – PRODUCTS

### 2.1 MANUFACTURERS

A. Manufacturer: Equal products by the following manufacturers are also acceptable provided that, in the opinion of the Architect, appearance and manufacturing quality, meet specified standards.

1. Benjamin Moore and Co.
2. ICI Paints.
3. Pratt and Lambert.
4. PPG Architectural Finishes, Inc.
5. The Sherwin-Williams Co.

### 2.2 EXTERIOR PAINTING SCHEDULE

A. Metal – Ferrous (Semi-Gloss): (Acrylic Latex System)

1. Primer: 100 percent Acrylic, Waterborne, Corrosion Resistant Primer, 3.0 mils/coat.
2. Finish Coats: 100 percent Acrylic, Waterborne, Semi-Gloss (30-40 units at 60 degrees F.), 3.0 mils DFT/coat: two coats.
3. Surfaces: Miscellaneous ferrous metal.

B. Metal – Galvanized (Semi-Gloss): (Acrylic Latex System)

1. Finish Coats: 100 percent Acrylic, Waterborne, Semi-Gloss (30-40 units at 60 degress F.), 3.0 mils DFT/coat: two coats.
2. Surfaces: Exterior lintels.

### 2.3 INTERIOR PAINTING SCHEDULE

A. Concrete Masonry Surfaces (Semi-Gloss): (Vinyl Acrylic Latex System)

1. Primer: Vinyl Acrylic Block Filler.
2. Finish Coats: Vinyl Acrylic Semi-Gloss Enamel (25-35 units at 60 degrees F.), 1.5 DFT/coat: two coats.
3. Surfaces: New masonry walls.

B. Metal – Ferrous (Semi-Gloss): (Alkyd Enamel System, Maximum VOC content 450 grams/liter)

1. Primer: Modified Alkyd Resin Primer, 3 mils DFT/coat.
2. Finish Coats: Alkyd Enamel, Semi-Gloss (40-50 units at 60 degrees F.), 3.0 mils DFT/coat: two coats.
3. Surfaces: Hollow metal frames, railings, ferrous metal surfaces.

C. Gypsum Board (Eg-Shel): (Modified Alkyd System – Low VOC)

1. Primer: Vinyl Acrylic Latex, 1.1 mils DFT/coat.

2. Finish Coats: Modified Alkyd Eg-Shel (20-30 units at 60 degrees F.), 2.5 – 2.8 mils DFT/coat: two coats.
3. Surfaces: Gypsum board surfaces, subject to moderate abuse.

D. Hollow metal frame backcoating, mortar and grout protective coating (bituminous bitumastic paint) at all hollow metal frames to be grouted full. Two 6 mil coats of one of the following products:

1. Pratt & Lambert: Petroleum Epoxy, Black Epoxy Finish 5254.
2. Glidden: Glid-Guard Coal Tar Epoxy Enamel.
3. Sherwin-Williams: Sher Tar Coal Tar Epoxy.

PART 3 – EXECUTION

3.1 EXAMINATION

A. Examine substrates and conditions under which painting will be performed for compliance with requirements for application of paint. Do not begin paint application until unsatisfactory conditions have been corrected.

1. Start of painting constitutes Applicator's acceptance of surfaces and conditions within a particular area.

3.4 PREPARATION

A. Remove hardware and hardware accessories, plates, machined surfaces, lighting fixtures, and similar items in place that are not to be painted, or provide surface-applied protection prior to surface preparation and painting. Remove these items if necessary for complete painting of the items and adjacent surfaces. Following completion of painting operations in each space or area, have items reinstalled by workers skilled in the trades involved.

1. Clean surfaces before applying paint. Remove oil and grease before cleaning. Schedule cleaning and painting so dust and other containments from the cleaning process will not fall on wet, newly painted surfaces.

B. Clean and prepare surfaces to be painted in accordance with the manufacturer's instructions for each particular substrate condition and as specified.

1. Cementitious Materials: Prepare concrete unit masonry surfaces to be painted. Remove efflorescence, chalk, dust, dirt, grease, oils, and release agents. Roughen as required to remove glaze.
2. Ferrous Metals: Clean non-galvanized ferrous metal surfaces that are not shop coated; remove oil, grease, dirt, loose mill scale; all foreign substances. Use solvent or mechanical cleaning methods: comply with SSPC recommendations.

a. Touch up bare areas and damaged shop-applied prime coats. Wire-brush, clean with paint manufacturer recommended solvents, and touch up with the same primer as the shop coat.

3. Galvanized Surfaces: Clean galvanized surfaces with non-petroleum based solvents so the surface is free of oil and surface contaminants. Remove pretreatment from galvanized sheet metal fabricated from coil stock by mechanical methods.

C. Materials Preparation: Carefully mix and prepare paint materials in accordance with manufacturer's directions.

1. Maintain containers used in mixing and applications of paint in a clean condition, free of foreign materials and residue.
2. Stir material before application to produce a mixture of uniform density; stir as required during application. Do not stir surface film into material. Remove film and, if necessary, strain material before using.
3. Use only paint manufacturer approved thinners. Comply with manufacturer's recommended limits.

## 3.3 APPLICATION

A. Apply paint in accordance with manufacturer's directions. Use applicators and techniques best suited for substrate and type of material being applied.

B. Do not paint over dirt, rust, scale, grease, moisture, scuffed surfaces, or conditions detrimental to formation of a durable paint film.

1. The number of coats and film thickness required is the same regardless of the application method. Do not apply succeeding coats until the previous coat has cured as recommended by the manufacturer. Sand between applications where sanding is required to produce an even, smooth surface in accordance with the manufacturer's directions.
2. Apply additional coats when undercoats, stains, or other conditions show through final coat of paint until paint film is of uniform finish, color and appearance. Take special care to ensure that all edges, corners, crevices, welds, and exposed fasteners, receive a dry film thickness equivalent to that of flat surfaces.
3. The term "exposed surfaces" includes areas visible when permanent or built-in fixtures, convector covers, covers for finned tube radiation, grilles, and similar components are in place. Extend coatings in these areas as required to maintain the system integrity and provide desired protection.
4. Paint surfaces behind equipment and furniture same as similar exposed surfaces.
5. Paint interior surfaces of ducts, where visible through registers or grilles, with a flat, nonspecular black paint.
6. Sand lightly between each succeeding enamel coat.
7. Omit primer on metal surfaces that have been shop-primed and touch up painted.

C. Scheduling Painting: Apply first coat to surfaces that have been cleaned, pretreated, or otherwise prepared for painting as soon as practicable after preparation and before subsequent surface deterioration.

1. Allow sufficient time between successive coats to permit proper drying. Do not recoat until paint has dried to where it feels firm, and does not deform or feel sticky under moderate thumb pressure and where application of another coat of paint does not cause lifting or loss of adhesion of the undercoat.

2. Minimum Coating Thickness: Apply materials at not less than the manufacturer's recommended spreading rate.
   DO NOT APPLY FINAL COAT OF PAINT UNTIL ARCHITECT HAS REVIEWED SURFACE.

D. Block Fillers: Apply block fillers to concrete masonry units at a rate to ensure complete coverage with pores filled.

E. Prime Coats: Before application of finish coats, apply a prime coat of material as recommended by the manufacturer to material that is required to be painted or finished and has not been prime coated by others. Recoat primed and sealed surfaces where evidence of suction spots or unsealed areas in first coat appears, to assure a finish coat with no burn through or other defects due to insufficient sealing.

F. Completed Work: Match approved samples for color, texture, and coverage. Remove, refinish or repaint work not in compliance with specified requirements.

3.5 CLEANING

A. Cleanup: At the end of each work day, remove empty cans, rags, rubbish, and other discarded paint materials from the site.

B. Upon completion of painting, clean glass and paint-spattered surfaces. Remove spattered paint by washing and scraping, using care not to scratch or damage adjacent finished surfaces.

3.6 PROTECTION

A. Protect work of other trades, whether to be painted or not, against damage from painting. Correct damage by cleaning, repairing or replacing, and repainting.

B. Provide "wet paint" signs to protect newly painted finishes. Remove temporary protective wrappings provided by others for protection of their work after completion of painting operations.

   1. At completion of construction activities of other trades, touch up and restore damaged or defaced painted surfaces.

END OF SECTION 099000

# SECTION 101100 - VISUAL DISPLAY SURFACES

## PART 1 - GENERAL

### 1.1 RELATED DOCUMENTS

A. Drawings and general provisions of the Contract, including General and Supplementary Conditions and Division 01 Specification Sections, apply to this Section.

### 1.2 SUMMARY

A. Section Includes:

1. Markerboards.
2. Tackboards.
3. Visual display rails.

### 1.3 DEFINITIONS

A. Tackboard: Framed or unframed, tackable, visual display board assembly.

B. Visual Display Board Assembly: Visual display surface that is factory fabricated into composite panel form, either with or without a perimeter frame; includes chalkboards, markerboards, and tackboards.

C. Visual Display Surface: Surfaces that are used to convey information visually, including surfaces of chalkboards, markerboards, tackboards, and surfacing materials that are not fabricated into composite panel form but are applied directly to walls.

### 1.4 ACTION SUBMITTALS

A. Product Data: For each type of product indicated. Include construction details, material descriptions, dimensions of individual components and profiles, and finishes for visual display surfaces.

B. Shop Drawings: For visual display surfaces. Include plans, elevations, sections, details, and attachments to other work.

1. Show locations of panel joints.
2. Show locations of special-purpose graphics for visual display surfaces.
3. Include sections of typical trim members.
4. Wiring Diagrams: For power, signal, and control wiring.

C. Samples for Initial Selection: For each type of visual display surface indicated, for units with factory-applied color finishes, and as follows:

1. Fabric swatches of vinyl and polyester-fabric-faced tack assemblies.
2. Include accessory Samples to verify color selected.

D. Product Schedule: For visual display surfaces. Use same designations indicated on Drawings.

## 1.5 QUALITY ASSURANCE

A. Source Limitations: Obtain visual display surfaces from single source from single manufacturer.

B. Surface-Burning Characteristics: As determined by testing identical products according to ASTM E 84 by a qualified testing agency. Identify products with appropriate markings of applicable testing agency.

1. Flame-Spread Index: 25 or less.
2. Smoke-Developed Index: 450 or less.

## 1.6 DELIVERY, STORAGE, AND HANDLING

A. Deliver factory-built visual display surfaces, including factory-applied trim where indicated, completely assembled in one piece without joints, where possible. If dimensions exceed maximum manufactured panel size, provide two or more pieces of equal length as acceptable to Architect. When overall dimensions require delivery in separate units, prefit components at the factory, disassemble for delivery, and make final joints at the site.

B. Store visual display surfaces vertically with packing materials between each unit.

## 1.7 PROJECT CONDITIONS

A. Environmental Limitations: Do not deliver or install visual display surfaces until spaces are enclosed and weather-tight, wet work in spaces is complete and dry, work above ceilings is complete, and temporary HVAC system is operating and maintaining ambient temperature and humidity conditions at occupancy levels during the remainder of the construction period.

B. Field Measurements: Verify actual dimensions of construction contiguous with visual display surfaces by field measurements before fabrication.

1. Allow for trimming and fitting where taking field measurements before fabrication might delay the Work.

## 1.8 WARRANTY

A. Special Warranty for Porcelain-Enamel Face Sheets: Manufacturer's standard form in which manufacturer agrees to repair or replace porcelain-enamel face sheets that fail in materials or workmanship within specified warranty period.

1. Failures include, but are not limited to, the following:

a. Surfaces lose original writing and erasing qualities.
b. Surfaces exhibit crazing, cracking, or flaking.

2. Warranty Period: Life of the building.

PART 2 - PRODUCTS

2.1 MATERIALS, GENERAL

A. Porcelain-Enamel Face Sheet: ASTM A 424, enameling-grade steel, uncoated thickness indicated; with exposed face and edges coated with primer, 1.7-to-2.5-mil- thick ground coat, and color cover coat; and with concealed face coated with primer and 1.7-to-2.5-mil- thick ground coat.

1. Matte-Finish Cover Coat: Low reflective; chalk wipes clean with dry cloth or standard eraser. Minimum 2.0-to-2.5-mil- thick cover coat. Cover and ground coats shall be fused to steel at manufacturer's standard firing temperatures but not less than 1250 deg F.

a. Products: Subject to compliance with requirements, provide products by one of the following.
1) PolyVision Corporation, a Steelcase company; $P^3$ ceramicsteel Chalkboard.
2) Claridge Products and Equipment, Inc.
3) Egan Visual Inc.

2. Gloss-Finish Cover Coat: Gloss as indicated; dry-erase markers wipe clean with dry cloth or standard eraser. Minimum 3.0-to-4.0-mil- thick cover coat. Cover and ground coats shall be fused to steel at manufacturer's standard firing temperatures but not less than 1475 deg F.

a. Products: Subject to compliance with requirements, provide the following.

1) PolyVision Corporation, a Steelcase company; $P^3$ ceramicsteel Markerboard.
2) Claridge Products and Equipment, Inc.
3) Egan Visual Inc.

B. Vinyl Fabric: Mildew resistant, washable, complying with FS CCC-W-408D, Type II, weighing not less than 15 oz./sq. yd.; with surface-burning characteristics indicated.

1. Manufacturer: Visual Display Board Manufacturers standard.
2. Color: As selected by Architect from manufacturers full line.

C. Hardboard: ANSI A135.4, tempered.

D. Fiberboard: ASTM C 208.

E. Extruded Aluminum: ASTM B 221, Alloy 6063.

## 2.2 MARKERBOARD ASSEMBLIES

A. Porcelain-Enamel Markerboards: Balanced, high-pressure, factory-laminated markerboard assembly of three-ply construction consisting of backing sheet, core material, and 0.013-inch-thick, porcelain-enamel face sheet with high-gloss finish.

1. Manufacturers: Subject to compliance with requirements, provide products by one of the following:

   a. Claridge Products and Equipment, Inc.
   b. Egan Visual Inc.
   c. PolyVision Corporation; a Steelcase company.

2. Hardboard Core: 1/4 inch thick; with 0.013-inch- thick, galvanized-steel sheet backing.
3. Laminating Adhesive: Manufacturer's standard, moisture-resistant thermoplastic type.

## 2.3 TACKBOARD ASSEMBLIES

A. Manufacturers: Subject to compliance with requirements, provide products by one of the following:

1. Claridge Products and Equipment, Inc.
2. Egan Visual Inc.
3. PolyVision Corporation; a Steelcase company.

B. Vinyl-Fabric-Faced Tackboard: 1/4-inch- thick, vinyl-fabric-faced cork sheet factory laminated to 1/4-inch- thick hardboard backing.

C. General: Manufacturer's standard, aluminum-framed, tackable fabric visual display surface fabricated into narrow rail shape and designed for displaying material.

## 2.4 TACKSTRIP ASSEMBLIES

A. Manufacturers: Subject to compliance with requirements, provide products by one of the following:

1. PolyVision Corporation; a Steelcase company.
2. Architect's approved equal.

B. Plastic-Impregnated-Cork Tackstrip TS: 1/4-inch- thick, plastic-impregnated cork sheet factory laminated to 1/4-inch- thick hardboard backing. Provide 2” high aluminum extrusion.

## 2.5 MARKERBOARD AND TACKBOARD ACCESSORIES

A. Aluminum Frames and Trim: Fabricated from not less than 0.062-inch- thick, extruded aluminum; standard size and shape.

1. Factory-Applied Trim: Manufacturer's standard.

B. Markertray: Manufacturer's standard, continuous.

1. Box Type: Extruded aluminum with slanted front, grooved tray, and cast-aluminum end closures.

C. Map Rail: Provide the following accessories:

1. Display Rail: Continuous and integral with map rail; fabricated from cork approximately 1 to 2 inches wide.
2. End Stops: Located at each end of map rail.
3. Map Hooks and Clips: Two map hooks with flexible metal clips for every 48 inches of map rail or fraction thereof.
4. Flag Holder: One for each room.

D. Special-Purpose Graphics: Fuse or paint the following graphics into surface of porcelain-enamel visual display unit:

1. Music staff lines (locations noted on drawings).

E. Tack Strip: Extruded aluminum with plastic impregnated cork.

1. Height: 2” H
2. Length: Per schedule.

## 2.6 FABRICATION

A. Porcelain-Enamel Visual Display Assemblies: Laminate porcelain-enamel face sheet and backing sheet to core material under heat and pressure with manufacturer's standard flexible, waterproof adhesive.

B. Visual Display Boards: Factory assemble visual display boards unless otherwise indicated.

1. Where factory-applied trim is indicated, trim shall be assembled and attached to visual display boards at manufacturer's factory before shipment.

C. Factory-Assembled Visual Display Units: Coordinate factory-assembled units with trim and accessories indicated. Join parts with a neat, precision fit.

1. Make joints only where total length exceeds maximum manufactured length. Fabricate with minimum number of joints, balanced around center of board, as acceptable to Architect.
2. Provide manufacturer's standard vertical-joint H-trim system between abutting sections of markerboards.
3. Where size of visual display boards or other conditions require support in addition to normal trim, provide structural supports or modify trim as indicated or as selected by Architect from manufacturer's standard structural support accessories to suit conditions indicated.

D. Aluminum Frames and Trim: Fabricate units straight and of single lengths, keeping joints to a minimum. Miter corners to a neat, hairline closure.

1. Where factory-applied trim is indicated, trim shall be assembled and attached to visual display units at manufacturer's factory before shipment.

## 2.7 GENERAL FINISH REQUIREMENTS

A. Comply with NAAMM's "Metal Finishes Manual for Architectural and Metal Products" for recommendations for applying and designating finishes.

B. Protect mechanical finishes on exposed surfaces from damage by applying a strippable, temporary protective covering before shipping.

C. Appearance of Finished Work: Noticeable variations in same piece are not acceptable. Variations in appearance of adjoining components are acceptable if they are within the range of approved Samples and are assembled or installed to minimize contrast.

## 2.8 ALUMINUM FINISHES

A. Clear Anodic Finish: AAMA 611, AA-M12C22A31, Class II, 0.010 mm or thicker.

B. Color Anodic Finish: AAMA 611, AA-M12C22A32/A34, Class II, 0.010 mm or thicker.

C. Baked-Enamel or Powder-Coat Finish: AAMA 2603 except with a minimum dry film thickness of 1.5 mils. Comply with coating manufacturer's written instructions for cleaning, conversion coating, and applying and baking finish.

## 2.9 VISUAL DISPLAY SURFACE SCHEDULE

A. Visual Display Board: Factory assembled.

1. Markerboard: Porcelain-enamel markerboard assembly.

    a. Color: White.

2. Corners: Square.
3. Width: As indicated on Drawings.
4. Height: As indicated on Drawings.
5. Mounting: Wall.
6. Mounting Height: As indicated on Drawings.
7. Factory-Applied Aluminum Trim: Manufacturer's standard with clear anodic finish.
8. Accessories:

    a. Marker tray: Box type.
    b. Map rail with display rail, end stops, map hooks and clips and flag holder.

B. Tackboard: Factory assembled.

1. Tack Surface: Vinyl-fabric-faced tackboard assembly.
2. Corners: Square.

3. Width: As indicated on Drawings.
4. Height: As indicated on Drawings.
5. Mounting: Wall.
6. Mounting Height: As indicated on Drawings.
7. Edges: Concealed by trim.

    a. Factory-Applied Aluminum Trim: Manufacturer's standard style, with clear anodic finish.

C. Visual Display Rail: Factory assembled.

1. Tack Surface: Plastic-impregnated-cork tackboard assembly.
2. Size: 2 inches high by length indicated on Drawings.
3. Edges: Extruded-aluminum trim.
4. Ends: Aluminum.
5. Aluminum Finish: Clear anodic finish.

## PART 3 - EXECUTION

### 3.1 EXAMINATION

A. Examine substrates and conditions, with Installer present, for compliance with requirements for installation tolerances, surface conditions of wall, and other conditions affecting performance of the Work.

B. Examine walls and partitions for proper preparation and backing for visual display surfaces.

C. Examine walls and partitions for suitable framing depth where sliding visual display units will be installed.

D. Proceed with installation only after unsatisfactory conditions have been corrected.

### 3.2 PREPARATION

A. Comply with manufacturer's written instructions for surface preparation.

B. Clean substrates of substances that could impair the performance of and affect the smooth, finished surfaces of visual display boards, including dirt, mold, and mildew.

C. Prepare surfaces to achieve a smooth, dry, clean surface free of flaking, unsound coatings, cracks, defects, projections, depressions, and substances that will impair bond between visual display surfaces and wall surfaces.

D. Prepare recesses for sliding visual display units as required by type and size of unit.

## 3.3 INSTALLATION, GENERAL

A. General: Install visual display surfaces in locations and at mounting heights indicated on Drawings, or if not indicated, at heights indicated below. Keep perimeter lines straight, level, and plumb. Provide grounds, clips, backing materials, adhesives, brackets, anchors, trim, and accessories necessary for complete installation.

1. Mounting Height: As indicated on drawings.

## 3.4 INSTALLATION OF FACTORY-FABRICATED VISUAL DISPLAY BOARDS AND ASSEMBLIES

A. Visual Display Boards: Attach concealed clips, hangers, and grounds to wall surfaces and to visual display boards with fasteners at not more than 16 inches o.c. Secure both top and bottom of boards to walls.

## 3.5 CLEANING AND PROTECTION

A. Clean visual display surfaces according to manufacturer's written instructions. Attach one cleaning label to visual display surface in each room.

B. Touch up factory-applied finishes to restore damaged or soiled areas.

C. Cover and protect visual display surfaces after installation and cleaning.

END OF SECTION 101100

# SECTION 101400 - SIGNAGE

## PART 1 - GENERAL

### 1.1 RELATED DOCUMENTS

A. Drawings and general provisions of the Contract, including General and Supplementary Conditions and Division 01 Specification Sections, apply to this Section.

### 1.2 SUMMARY

A. This Section includes the following:
   1. Interior panel signs.

### 1.3 DEFINITIONS

A. ADA-ABA Accessibility Guidelines: U.S. Architectural & Transportation Barriers Compliance Board's "Americans with Disabilities Act (ADA) Accessibility Guidelines for Buildings and Facilities; Architectural Barriers Act (ABA) Accessibility Guidelines."

### 1.4 SUBMITTALS

A. Product Data: For each type of product indicated.

B. Shop Drawings: Show fabrication and installation details for signs.

   1. Show sign mounting heights and accessories.
   2. Provide message list, typestyles, and graphic elements, including tactile characters and Braille, and layout for each sign.

C. Samples for Verification: For each of the following products and for the full range of color, texture, and sign material indicated, of sizes indicated:

   1. Acrylic Sheet: 8 by 10 inches for each color required.
   2. Panel Signs: Not less than 12 inches square including border.
   3. Accessories: Manufacturer's full-size unit.

D. Sign Schedule: Use same designations indicated on Drawings.

E. Qualification Data: For Installer and fabricator.

F. Maintenance Data: For signs to include in maintenance manuals.

G. Warranty: Special warranty specified in this Section.

1.5 QUALITY ASSURANCE

A. Installer Qualifications: Fabricator of products.

B. Fabricator Qualifications: Shop that employs skilled workers who custom-fabricate products similar to those required for this Project and whose products have a record of successful in-service performance.

C. Source Limitations for Signs: Obtain each sign type indicated from one source from a single manufacturer.

D. Regulatory Requirements: Comply with applicable provisions in ADA-ABA Accessibility Guidelines and ICC/ANSI A117.1.

1.6 PROJECT CONDITIONS

A. Weather Limitations: Proceed with installation only when existing and forecasted weather conditions permit installation of signs in exterior locations to be performed according to manufacturers' written instructions and warranty requirements.

B. Field Measurements: Verify recess openings by field measurements before fabrication and indicate measurements on Shop Drawings.

1.7 WARRANTY

A. Special Warranty: Manufacturer's standard form in which manufacturer agrees to repair or replace components of signs that fail in materials or workmanship within specified warranty period.

1. Failures include, but are not limited to, the following:

a. Deterioration of metal and polymer finishes beyond normal weathering.
b. Deterioration of embedded graphic image colors.

2. Warranty Period: Five years from date of Final Completion.

PART 2 - PRODUCTS

2.1 MATERIALS

A. Acrylic Sheet: ASTM D 4802, Category A-1 (cell-cast sheet), Type UVA (UV absorbing).

2.2 PANEL SIGNS

A. Manufacturers: Subject to compliance with requirements, provide products by one of the following:

1. Beechwood E.S. and Etna E.S.: Columbus Graphics
2. Kae Avenue E.S.: In Pro

B. Interior Panel Signs: Provide smooth sign panel surfaces constructed to remain flat under installed conditions within a tolerance of plus or minus 1/16 inch measured diagonally from corner to corner, complying with the following requirements:

1. Acrylic Sheet: 0.080 inch thick.
2. PVC Sheet: 0.080-inch- thick, extruded, high-impact PVC plastic in color to match face color.
3. Phenolic-Backed Photopolymer Sheet: Provide light-sensitive, water-wash photopolymer face layer bonded to a phenolic base layer to produce a composite sheet with overall, face layer, and base-layer thicknesses, respectively, of 0.120, 0.040, and 0.080 inch.
4. Edge Condition: Bullnose.
5. Corner Condition: Rounded to radius indicated.
6. Mounting: Unframed.

    a. Wall mounted with concealed anchors.
    b. Manufacturer's standard anchors for substrates encountered.

7. Color: Match existing.
8. Tactile Characters: Characters and Grade 2 Braille raised 1/32 inch above surface with matching color.

C. Tactile and Braille Sign: Manufacturer's standard process for producing text and symbols complying with ADA-ABA Accessibility Guidelines and with ICC/ANSI A117.1. Text shall be accompanied by Grade 2 Braille. Produce precisely formed characters with square-cut edges free from burrs and cut marks; Braille dots with domed or rounded shape.

1. Panel Material: Photopolymer.
2. Raised-Copy Thickness: Not less than 1/32 inch.

D. Colored Coatings for Acrylic Sheet: For copy and background colors, provide colored coatings, including inks, dyes, and paints, that are recommended by acrylic manufacturers for optimum adherence to acrylic surface and are UV and water resistant for five years for application intended.

1. Color: Match existing.

## 2.3 FINISHES, GENERAL

A. Comply with NAAMM's "Metal Finishes Manual for Architectural and Metal Products" for recommendations for applying and designating finishes.

B. Protect mechanical finishes on exposed surfaces from damage by applying a strippable, temporary protective covering before shipping.

C. Appearance of Finished Work: Variations in appearance of abutting or adjacent pieces are acceptable if they are within one-half of the range of approved Samples. Noticeable variations in the same piece are not acceptable. Variations in appearance of other components are

acceptable if they are within the range of approved Samples and are assembled or installed to minimize contrast.

## 2.4 ACRYLIC SHEET FINISHES

A. Colored Coatings for Acrylic Sheet: For copy and background colors, provide colored coatings, including inks, dyes, and paints, that are recommended by acrylic manufacturers for optimum adherence to acrylic surface and that are UV and water resistant for five years for application intended.

# PART 3 - EXECUTION

## 3.1 EXAMINATION

A. Examine substrates, areas, and conditions, with Installer present, for compliance with requirements for installation tolerances and other conditions affecting performance of work.

B. Verify that items, including anchor inserts, are sized and located to accommodate signs.

C. Proceed with installation only after unsatisfactory conditions have been corrected.

## 3.2 INSTALLATION

A. Locate signs and accessories where indicated, using mounting methods of types described and complying with manufacturer's written instructions.

1. Install signs level, plumb, and at heights indicated, with sign surfaces free of distortion and other defects in appearance.
2. Interior Wall Signs: Install signs on walls adjacent to latch side of door where applicable. Where not indicated or possible, such as double doors, install signs on nearest adjacent walls. Locate to allow approach within 3 inches of sign without encountering protruding objects or standing within swing of door.

B. Wall-Mounted Signs: Comply with sign manufacturer's written instructions except where more stringent requirements apply.

1. Two-Face Tape: Mount signs to smooth, nonporous surfaces. Do not use this method for vinyl-covered or rough surfaces.
2. Hook-and-Loop Tapes: Mount signs to smooth, nonporous surfaces.
3. Magnetic Tape: Mount signs to smooth, nonporous surfaces.
4. Silicone-Adhesive Mounting: Attach signs to irregular, porous, or vinyl-covered surfaces.
5. Shim Plate Mounting: Provide 1/8-inch- thick, concealed aluminum shim plates with predrilled and countersunk holes, at locations indicated, and where other mounting methods are not practicable. Attach plate with fasteners and anchors suitable for secure attachment to substrate. Attach panel signs to plate using method specified above.

6. Mechanical Fasteners: Use non-removable mechanical fasteners placed through predrilled holes. Attach signs with fasteners and anchors suitable for secure attachment to substrate as recommended in writing by sign manufacturer.
7. Signs Mounted on Glass: Provide matching opaque plate on opposite side of glass to conceal mounting materials.

3.3 CLEANING AND PROTECTION

A. After installation, clean soiled sign surfaces according to manufacturer's written instructions. Protect signs from damage until acceptance by Owner.

3.4 PANEL SIGN SCHEDULE: Refer to Architectural Drawings.

END OF SECTION 101400

# SECTION 104413 - FIRE EXTINGUISHER CABINETS

## PART 1 - GENERAL

### 1.1 RELATED DOCUMENTS

A. Drawings and general provisions of the Contract, including General and Supplementary Conditions and Division 01 Specification Sections, apply to this Section.

### 1.2 SUMMARY

A. Section Includes:

1. Fire protection cabinets for the following:

a. Portable fire extinguishers.

B. Related Sections:

1. Division 10 Section "Fire Extinguishers."

### 1.3 SUBMITTALS

A. Product Data: For each type of product indicated. Include construction details, material descriptions, dimensions of individual components and profiles, and finishes for fire protection cabinets.

1. Fire Protection Cabinets: Include roughing-in dimensions, details showing mounting methods, relationships of box and trim to surrounding construction, door hardware, cabinet type, trim style, and panel style.

B. Shop Drawings: For fire protection cabinets. Include plans, elevations, sections, details, and attachments to other work.

C. Product Schedule: For fire protection cabinets. Coordinate final fire protection cabinet schedule with fire extinguisher schedule to ensure proper fit and function. Use same designations indicated on Drawings.

D. Maintenance Data: For fire protection cabinets to include in maintenance manuals.

### 1.4 COORDINATION

A. Coordinate size of fire protection cabinets to ensure that type and capacity of fire extinguishers indicated are accommodated.

B. Coordinate sizes and locations of fire protection cabinets with wall depths.

1.5 SEQUENCING

A. Apply vinyl lettering on field-painted, fire protection cabinets after painting is complete.

PART 2 - PRODUCTS

2.1 MATERIALS

A. Cold-Rolled Steel Sheet: ASTM A 1008/A 1008M, Commercial Steel (CS), Type B.

B. Tempered Float Glass: ASTM C 1048, Kind FT, Condition A, Type I, Quality q3, 3 mm thick, Class 1 (clear).

2.2 FIRE PROTECTION CABINET

A. Cabinet Type: Suitable for fire extinguisher.

1. Products: Subject to compliance with requirements, provide one of the following:

a. J. L. Industries, Inc., a division of Activar Construction Products Group.
b. Kidde Residential and Commercial Division, Subsidiary of Kidde plc.
c. Larsen's Manufacturing Company.
d. Modern Metal Products, Division of Technico Inc.
e. Moon-American.
f. Potter Roemer LLC.

B. Cabinet Construction: Nonrated.

C. Cabinet Material: Steel sheet.

D. Semirecessed Cabinet: Cabinet box partially recessed in walls of sufficient depth to suit style of trim indicated; with one-piece combination trim and perimeter door frame overlapping surrounding wall surface with exposed trim face and wall return at outer edge (backbend).

1. Rolled-Edge Trim: 2-1/2-inch backbend depth.

E. Cabinet Trim Material: Same material and finish as door.

F. Door Material: Steel sheet.

G. Door Style: Vertical duo panel with frame and solid door panel with frame.

H. Door Glazing: Tempered float glass (clear).

I. Door Hardware: Manufacturer's standard door-operating hardware of proper type for cabinet type, trim style, and door material and style indicated.

1. Provide manufacturer's standard.
2. Provide continuous hinge, of same material and finish as trim, permitting door to open 180 degrees.

J. Accessories:

1. Mounting Bracket: Manufacturer's standard steel, designed to secure fire extinguisher to fire protection cabinet, of sizes required for types and capacities of fire extinguishers indicated, with plated or baked-enamel finish.
2. Identification: Lettering complying with authorities having jurisdiction for letter style, size, spacing, and location. Locate as indicated.

a. Identify fire extinguisher in fire protection cabinet with the words "FIRE EXTINGUISHER."

1) Location: Applied to cabinet door.
2) Application Process: Pressure-sensitive vinyl letters.
3) Lettering Color: Red.
4) Orientation: Vertical.

K. Finishes:

1. Manufacturer's standard baked-enamel paint for the following:

a. Exterior of cabinet, door, and trim except for those surfaces indicated to receive another finish.
b. Interior of cabinet and door.

2. Steel: Baked enamel or powder coat.

## 2.3 FABRICATION

A. Fire Protection Cabinets: Provide manufacturer's standard box (tub) with trim, frame, door, and hardware to suit cabinet type, trim style, and door style indicated.

1. Weld joints and grind smooth.
2. Provide factory-drilled mounting holes.

B. Cabinet Doors: Fabricate doors according to manufacturer's standards, from materials indicated and coordinated with cabinet types and trim styles selected.

1. Fabricate door frames with tubular stiles and rails and hollow-metal design, minimum 1/2 inch thick.
2. Miter and weld perimeter door frames.

C. Cabinet Trim: Fabricate cabinet trim in one piece with corners mitered, welded, and ground smooth.

## 2.4 GENERAL FINISH REQUIREMENTS

A. Comply with NAAMM's "Metal Finishes Manual for Architectural and Metal Products" for recommendations for applying and designating finishes.

B. Protect mechanical finishes on exposed surfaces of fire protection cabinets from damage by applying a strippable, temporary protective covering before shipping.

C. Finish fire protection cabinets after assembly.

D. Appearance of Finished Work: Noticeable variations in same piece are not acceptable. Variations in appearance of adjoining components are acceptable if they are within the range of approved Samples and are assembled or installed to minimize contrast.

## 2.5 STEEL FINISHES

A. Surface Preparation: Remove mill scale and rust, if present, from uncoated steel, complying with SSPC-SP 5/NACE No. 1, "White Metal Blast Cleaning". After cleaning, apply a conversion coating suited to the organic coating to be applied over it.

B. Baked-Enamel or Powder-Coat Finish: Immediately after cleaning and pretreating, apply manufacturer's standard two-coat, baked-on finish consisting of prime coat and thermosetting topcoat. Comply with coating manufacturer's written instructions for applying and baking to achieve a minimum dry film thickness of 2 mils.

1. Color and Gloss: As selected by Architect from manufacturer's full range.

# PART 3 - EXECUTION

## 3.1 EXAMINATION

A. Examine walls and partitions for suitable framing depth and blocking where semirecessed cabinets will be installed.

B. Proceed with installation only after unsatisfactory conditions have been corrected.

## 3.2 PREPARATION

A. Prepare recesses for semirecessed fire protection cabinets as required by type and size of cabinet and trim style.

## 3.3 INSTALLATION

A. General: Install fire protection cabinets in locations and at mounting heights indicated or, if not indicated, at heights indicated below:

1. Fire Protection Cabinets: 54 inches above finished floor to top of cabinet.

B. Fire Protection Cabinets: Fasten cabinets to structure, square and plumb.

1. Fasten mounting brackets to inside surface of fire protection cabinets, square and plumb.

C. Identification: Apply vinyl lettering at locations indicated.

## 3.4 ADJUSTING AND CLEANING

A. Remove temporary protective coverings and strippable films, if any, as fire protection cabinets are installed unless otherwise indicated in manufacturer's written installation instructions.

B. Adjust fire protection cabinet doors to operate easily without binding. Verify that integral locking devices operate properly.

C. On completion of fire protection cabinet installation, clean interior and exterior surfaces as recommended by manufacturer.

D. Touch up marred finishes, or replace fire protection cabinets that cannot be restored to factory-finished appearance. Use only materials and procedures recommended or furnished by fire protection cabinet and mounting bracket manufacturers.

E. Replace fire protection cabinets that have been damaged or have deteriorated beyond successful repair by finish touchup or similar minor repair procedures.

END OF SECTION 104413

# SECTION 104416 - FIRE EXTINGUISHERS

## PART 1 - GENERAL

### 1.1 RELATED DOCUMENTS

A. Drawings and general provisions of the Contract, including General and Supplementary Conditions and Division 01 Specification Sections, apply to this Section.

### 1.2 SUMMARY

A. Section includes portable, hand-carried fire extinguishers and mounting brackets for fire extinguishers.

B. Related Sections:

1. Division 10 Section "Fire Extinguisher Cabinets."

### 1.3 SUBMITTALS

A. Product Data: For each type of product indicated. Include rating and classification, material descriptions, dimensions of individual components and profiles, and finishes for fire extinguisher and mounting brackets.

B. Product Schedule: For fire extinguishers. Coordinate final fire extinguisher schedule with fire protection cabinet schedule to ensure proper fit and function. Use same designations indicated on Drawings.

C. Operation and Maintenance Data: For fire extinguishers to include in maintenance manuals.

D. Warranty: Sample of special warranty.

### 1.4 QUALITY ASSURANCE

A. NFPA Compliance: Fabricate and label fire extinguishers to comply with NFPA 10, "Portable Fire Extinguishers."

B. Fire Extinguishers: Listed and labeled for type, rating, and classification by an independent testing agency acceptable to authorities having jurisdiction.

1. Provide fire extinguishers approved, listed, and labeled by FMG.

1.5 COORDINATION

A. Coordinate type and capacity of fire extinguishers with fire protection cabinets to ensure fit and function.

1.6 WARRANTY

A. Special Warranty: Manufacturer's standard form in which manufacturer agrees to repair or replace fire extinguishers that fails in materials or workmanship within specified warranty period.

1. Failures include, but are not limited to, the following:

a. Failure of hydrostatic test according to NFPA 10.
b. Faulty operation of valves or release levers.

2. Warranty Period: Six years from date of Final Completion.

PART 2 - PRODUCTS

2.1 PORTABLE, HAND-CARRIED FIRE EXTINGUISHERS

A. Fire Extinguishers: Type, size, and capacity for each fire protection cabinet and mounting bracket indicated.

1. Manufacturers: Subject to compliance with requirements, provide products by one of the following:

a. Badger Fire Protection; a Kidde company.
b. J. L. Industries, Inc.; a division of Activar Construction Products Group.
c. Kidde Residential and Commercial Division; Subsidiary of Kidde plc.
d. Larsen's Manufacturing Company.
e. Moon-American.
f. Potter Roemer LLC.

B. Multipurpose Dry-Chemical Type in Steel Container: UL-rated 4-A: 60-B:C, 10-lb nominal capacity, with monoammonium phosphate-based dry chemical in enameled-steel container.

C. Purple-K Wet-Chemical potassium acetate solution.

PART 3 - EXECUTION

3.1 EXAMINATION

A. Examine fire extinguishers for proper charging and tagging.

1. Remove and replace damaged, defective, or undercharged fire extinguishers.

B. Proceed with installation only after unsatisfactory conditions have been corrected.

3.2 INSTALLATION

A. General: Install fire extinguishers in locations indicated and in compliance with requirements of authorities having jurisdiction.

END OF SECTION 104416

# SECTION 107315 - PRE-ENGINEERED ALUMINUM LIGHT SHELF

## PART 1 - GENERAL

### 1.1 RELATED DOCUMENTS

A. Drawings and general provisions of the Contract, including General and Supplementary Conditions and Division 01 Specification Sections, apply to this Section.

### 1.2 SECTION INCLUDES

A. Pre-Engineered Aluminum Light Shelf custom fabricated as depicted on Drawings.

B. The Drawings are not to be used for construction, but rather to assist in the preparation of the bid proposal and shop drawings.

### 1.3 RELATED SECTIONS

A. Unit Masonry Assemblies: Clips to be embedded into masonry mortar joints.

B. Structural Steel: Attachment to structural frame of the building.

C. Joint Sealers: Water tight sealants applicable to Work of this Section.

### 1.4 PERFORMANCE REQUIREMENTS

A. Comply with the following for exterior light shelf:
   1. Structural loading requirements:
      a. Downward: 20 lbs/SF.
      b. Upward: 20 lbs/SF.
      c. Horizontal Wind Load: 20 lbs/SF.
      d. Vertical point load at mid span: 250#.
   2. Weathering:
      a. Weathering of the complete panel assembly shall have been tested in accordance with ASTM D2247. The panel shall show no evidence of delamination of the facing and core when subjected to 100% humidity at 100 deg - F for 1000 hours.
   3. Fire Testing:
      a. The complete panel assembly shall have been successfully tested in accordance with ASTM E84 and certified to comply with the following characteristics:
         1) Flame Spread Index: 5 or less.
         2) Smoke Developed Index: 5 or less.
   4. Dimensional and Flatness Criteria:
      a. The panel component of the assembly shall have a flatness criteria not to exceed 1/16” in 18” in any direction. Using a straight edge, no points shall be more than 1/16” away from the straight edge between any two points of contact.
      b. Normal dimensional tolerances of the blade assembly shall be as follows:

1) Length: ±1/16”
2) Width: ±1/16”
3) Diagonal: ±1/8”
4) Radius: ±1/4”

5. Performance Testing - Adhesive:
   a. The adhesive shall have been tested in accordance with ASTM E84.
   b. The adhesive shall be tested at a temperature of 225 deg-F to determine that the shear values are not affected at this service temperature.

## 1.5 SUBMITTALS

A. Product Data: Provide manufacturer’s technical data, guide specification, and installation instructions for aluminum light shelf and supports.

B. Shop Drawings: Indicate fabrication and installation of light shelf. Include plans, elevations, and large-scale details. Show anchorages and accessory items. Provide location template drawings for items supported or anchored to permanent construction.

C. Samples: Submit two samples of light shelf, full depth x 36 inch in size, illustrating material, finish, and construction of light shelf.

D. Samples: Submit two Manufacturer’s color charts showing colors and finishes of exposed materials and accessories available.

E. Design Data: Provide a letter of Design Certification, signed and sealed by a qualified professional engineer licensed in the State of Ohio. Include the following Design Criteria:
   1. Design Loads: Include dead load, live load, deflection, wind loads/speeds, and exposure.

F. Warranty: Submit manufacturer warranty and ensure that forms have been completed in Owner’s name and registered with manufacturer.

## 1.6 QUALITY ASSURANCE

A. Manufacturer: Shall engineer system to withstand design loads indicated.

B. Manufacturer Qualifications: A firm experienced in producing aluminum fabrication similar to that indicated for this project, with a record of successful in-service performance as well as sufficient production capacity to produce required units.

C. Code Approvals:
   1. The panel component of the assembly shall have ICBO and OBC approvals. Approvals of individual components DOES NOT constitute compliance with this requirement.

D. Manufacturing and Fabrication:
   1. The Manufacturer shall have an existing Quality Assurance/Quality Control program which must include quarterly unannounced inspections by an independent Quality Control Agency. Inspections shall be performed in accordance with an approved inspection program.

2. The program records and manufacturing facilities shall be open for auditing and inspection during the course of the project.

E. Installation
1. The installer shall be the manufacturer or an experienced erection firm licensed by or acceptable to the light shelf manufacturer.
2. Written approval of any subcontract erector or verification that the work shall be installed by the manufacturer must be received by the Architect prior to the installation of any materials.

F. Design light shelves under direct supervision of a Professional Structural Engineer experienced in design of this Work and licensed in the State of Ohio.

## 1.7 DELIVERY, STORAGE, AND PROTECTION

A. Store aluminum fabrications inside a well-ventilated area, away from uncured concrete and masonry, and protected from weather, moisture, soiling, abrasion, extreme temperature, and humidity.

## 1.8 PROJECT CONDITIONS

A. Field Measurements: Verify dimensions of windows by field measurements before fabrication and indicate measurements on Shop Drawings. Coordinate fabrication schedule with construction progress to avoid delaying the Work.

## 1.9 WARRANTY

A. Correct defective Work within a five year period after date of Final Completion.

# PART 2 - PRODUCTS

## 2.1 APPROVED FABRICATORS

A. Products
1. Beechwood E.S. and Etna E.S.
   a. Doralco
2. Kae Avenue E.S.
   a. Element

## 2.2 MATERIALS - ALUMINUM

A. Extruded Aluminum: ASTM B 221 (ASTM B 221M), 6063 alloy, T6 temper.

B. Sheet Aluminum: ASTM B 209 (ASTM B 209M), 5052 alloy, H32 or H22 temper.

C. Aluminum-Alloy Drawn Seamless Tubes: ASTM B 210 (ASTM B 210M), 6063 alloy, T6 temper.

D. Aluminum-Alloy Bars: ASTM B 211 (ASTM B 211M), 6061 alloy, T6 temper.

E. Aluminum-Alloy Sand Castings: ASTM B 26.

F. Aluminum-Alloy Die Castings: ASTM B 85.

G. Bolts, Nuts, and Washers: Stainless steel.

H. Welding Materials: AWS D1.1; type required for materials being welded.

## 2.3 COMPONENTS

A. Frame: See Drawings for location and details for light shelf frame assembly construction and locations. Fabricate to match custom assemblies at each building.
   1. Frame assembly shall be shop fabricated from aluminum extrusions as described below.

B. Aluminum Extrusions:
   1. Aluminum extruded continuous square edge pieces and retainers shall be used to finish light shelf edges, produced to the same depth and finish to match the panel skins or as detailed. The edge assembly shall be designed in conjunction with the light shelf panels and shall be shop assembled and finished for a complete assembly delivered to the site.
   2. Extruded support retainers shall be designed in conjunction with and finished to match the light shelf panels to provide adequate support and means of positive attachment to the building structure as a complete assembly.
   3. The extrusion wall thickness, as a component of the light shelf system shall be designed in compliance with the loading and deflection requirements specified herein.
   4. All extrusions shall be fabricated as detailed and if exposed, finished to match the exterior skin.
   5. All extrusions will be formed in lengths equal to the entire length or width of the associated component, unless otherwise noted. All inside and outside corner intersections exposed to view are to be shop mitered.
   6. The alloy of the extrusions should be determined by its intended use. Such factors as corrosion resistance, machinability, formability, strength, and weldability shall be considered. The alloy should be listed on the product standard die drawing.

## 2.4 ACCESSORIES

A. Fasteners: Fasteners shall be compatible with structural substrate.
   1. All hardware shall be positively attached to the structure through the use of concealed fasteners contained within the assembly.
   2. Exposed fasteners shall be kept at a minimum and shall be countersunk stainless screws finished to match the light shelf system, unless otherwise noted. Exposed fasteners shall be clearly identified on Shop Drawings for review by the Architect.
   3. Fastener types and sizes shall be designed to resist negative and positive wind loads.

B. Adhesive: Thermo-setting type adhesive.

1. Type recommended by Manufacturer.
2. Contact type adhesives are not permitted.

## 2.5 SHOP FINISHING

A. Exterior Aluminum Surfaces: superior performance organic coating.
   1. Superior Performance Organic Coating System: AAMA 2605 multiple coat, thermally cured polyvinylidene fluoride system; color as selected from manufacturer's standard colors.

B. Finish for adhered surfaces: For portions of surfaces to receive adhesives on site, finish with primer compatible with recommended adhesives.

C. Surface protection: All exposed surfaces are to be protected by a strippable coating compatible with the anodized finish.

## 2.6 SOURCE QUALITY CONTROL

A. Interior Aluminum Surfaces: Epoxy bonded anodized aluminum (powder coat).
   1. Thermosetting powder coating bonded to anodized aluminum with the following characteristics:
   2. Specific Gravity: 1.26.
   3. Gloss @60: visually matte by standards of ASTM D523.
   4. Film Thickness: 3.0-4.0 mils measured by ASTM D1186.
   5. Depth of Field: Smooth.
   6. Pencil Hardness: 2H-3H by ASTM D3363.
   7. Impact Resistance: 160 inch/lbs. direct and reverse as measured by ASTM D2794.
   8. Adhesion: 5B as tested by D3359.
   9. Flexibility: Pass 1/8" bend. No cracking or loss of adhesion (ASTM D522).
   10. Salt Spray: Pass 1000 hours salt spray, less than 1/8" creepage, no blistering (ASTM B117).

B. Fabrication Tolerances:
   1. Length: ± 1/16 inch.
   2. Width: ±1/16 inch.
   3. Diagonal: ±1/8 inch.
   4. Radius: ±1/16 inch.

# PART 3 - EXECUTION

## 3.1 EXAMINATION

A. Furnish fasteners to be placed in structural frame construction for Work of appropriate Sections.

B. Verify that surrounding area is ready for the light shelf installation.

C. Verify that dimensions and elevations match Drawings and Shop Drawings.

D. Examine structure and surfaces for defects that would prevent proper installation of the light shelf system. Report any discrepancies to the Architect and Contractor. Do not proceed until the defects have been corrected.

## 3.2 PREPARATION

A. All masonry work to be performed must be complete before installation of light shelves may proceed.

## 3.3 INSTALLATION

A. Installation shall be in strict accordance with fabricator's Shop Drawings. Particular attention shall be given to protecting the finish during handling and erection.

B. Comply with the light shelf fabricator's instruction for assembly, installation and erection of light shelf system. Install in accordance with approved Shop Drawings.

C. Anchor component parts securely in place, providing for necessary thermal and structural movement.

## 3.4 ERECTION TOLERANCES

A. Maximum Variation from True Position: ±1/8" over the length of the light shelf.

B. Maximum Offset from True Alignment: ±1/8".

## 3.5 CLEANING

A. The strippable coating shall be removed by the erector immediately upon installation of the light shelf.

B. Clean all surfaces of the light shelf immediately after removal of the strippable coating.

C. Protect installed light shelves from subsequent construction operations.

D. Replace any and all defective or damaged light shelves immediately after discovery of defect or damage.

END OF SECTION 107315

# SECTION 122113 - HORIZONTAL LOUVER BLINDS

## PART 1 - GENERAL

### 1.1 RELATED DOCUMENTS

A. Drawings and general provisions of the Contract, including General and Supplementary Conditions and Division 01 Specification Sections, apply to this Section.

### 1.2 SUMMARY

A. Section Includes:

1. Remote operated horizontal louver blinds with aluminum slats to be provided at exterior aluminum windows and interior hollow metal windows as indicated on the drawings.

B. Related Sections:

1. Division 08 Section “Hollow Metal Frames”.
2. Division 08 Section “Aluminum Windows”.

### 1.3 ACTION SUBMITTALS

A. Product Data: For each type of product.

B. Shop Drawings: Show fabrication and installation details for horizontal louver blinds.

C. Samples: For each exposed product and for each color and texture specified, 12 inches long.

D. Samples for Verification: For each type and color of horizontal louver blind indicated.

1. Slat: Not less than 12 inches long.
2. Tapes: Full width, not less than 6 inches long.
3. Horizontal Louver Blind: Full-size unit, not less than 16 inches wide by 24 inches long.

### 1.4 CLOSEOUT SUBMITTALS

A. Maintenance Data: For horizontal louver blinds to include in maintenance manuals.

### 1.5 DELIVERY, STORAGE, AND HANDLING

A. Deliver horizontal louver blinds in factory packages, marked with manufacturer, product name, and location of installation using same designations indicated on Drawings.

1.6 FIELD CONDITIONS

A. Environmental Limitations: Do not install horizontal louver blinds until construction and wet and finish work in spaces, including painting, is complete and dry and ambient temperature and humidity conditions are maintained at the levels indicated for Project when occupied for its intended use.

B. Field Measurements: Where horizontal louver blinds are indicated to fit to other construction, verify dimensions of other construction by field measurements before fabrication and indicate measurements on Shop Drawings. Allow clearances for operating hardware of operable glazed units through entire operating range. Notify Architect of installation conditions that vary from Drawings. Coordinate fabrication schedule with construction progress to avoid delaying the Work.

PART 2 - PRODUCTS

2.1 MANUFACTURERS

A. Source Limitations: Obtain horizontal louver blinds from single source from single manufacturer.

2.2 HORIZONTAL LOUVER BLINDS, ALUMINUM SLATS

A. Manufacturers: Subject to compliance with requirements, provide products by one of the following:

1. Hunter Douglas Contract.
2. Levolor Contract; a Newell Rubbermaid company.
3. Springs Window Fashions.
4. Creative Windows

B. Slats: Aluminum; alloy and temper recommended by producer for type of use and finish indicated; with crowned profile and radius corners.

1. Width: 1/2 to 5/8 inch.
2. Thickness: Not less than 0.008 inch.
3. Spacing: Manufacturer's standard .
4. Finish: Ionized antistatic, dust-repellent, baked polyester finish.
5. Features:

a. Lift-Cord Rout Holes: Minimum size required for lift cord and located near back (outside) edge of slat to maximize slat overlap and minimize light gaps between slats.

C. Head rail: Formed steel or extruded aluminum; long edges returned or rolled. Headrails fully enclose operating mechanisms on three sides.

1. Capacity: One blind per head rail unless otherwise indicated.
2. Ends: Capped or plugged.

3. Manual Lift Mechanism:

   a. Lift-Cord Lock: Variable; stops lift cord at user-selected position within blind full operating range.
   b. Operator: Extension of lift cord(s) through lift-cord lock mechanism to form cord pull.

4. Manual Tilt Mechanism: Enclosed worm-gear mechanism and linkage rod that adjusts ladders.

   a. Tilt: Full.
   b. Operator: Clear-plastic wand.
   c. Over-Rotation Protection: Manufacturer's detachable operator or slip clutch to prevent over rotation of gear.

5. Manual Lift-Operator and Tilt-Operator Lengths: Manufacturer's standard.
6. Manual Lift-Operator and Tilt-Operator Locations: Right side and left side of head rail, respectively unless otherwise indicated.

D. Bottom Rail: Formed-steel or extruded-aluminum tube that secures and protects ends of ladders and lift cords and has plastic- or metal-capped ends.

   1. Type: Bottom contoured to minimize light gaps.

E. Lift Cords: Manufacturer's standard braided cord.

F. Ladders: Evenly spaced across head rail at spacing that prevents long-term slat sag.

   1. Type: Braided cord.

G. Mounting Brackets: With spacers and shims required for blind placement and alignment indicated.

   1. Type: Overhead.
   2. Intermediate Support: Provide intermediate support brackets to produce support spacing recommended by blind manufacturer for weight and size of blind.

H. Hold-Down Brackets and Hooks or Pins: Manufacturer's standard.

I. Colors, Textures, Patterns, and Gloss:

   1. Slats: As selected by Architect from manufacturer's full range
   2. Components: Provide rails, cords, ladders, and materials exposed to view matching or coordinating with slat color unless otherwise indicated.

## 2.3 HORIZONTAL LOUVER BLIND FABRICATION

A. Product Safety Standard: Fabricate horizontal louver blinds to comply with WCMA A 100.1 including requirements for corded, flexible, looped devices; lead content of components; and warning labels.

B. Unit Sizes: Fabricate units in sizes to fill window and other openings as follows, measured at 74 deg F:

1. Between (Inside) Jamb Installation: Width equal to jamb-to-jamb dimension of opening in which blind is installed less 1/4 inch per side or 1/2 inch total, plus or minus 1/8 inch. Length equal to head-to-sill dimension of opening in which blind is installed less 1/4 inch, plus or minus 1/8 inch.

C. Concealed Components: Non-corrodible or corrosion-resistant-coated materials.

1. Lift-and-Tilt Mechanisms: With permanently lubricated moving parts.

D. Mounting and Intermediate Brackets: Designed for removal and reinstallation of blind without damaging blind and adjacent surfaces, for supporting blind components, and for bracket positions and blind placement indicated.

E. Installation Fasteners: No fewer than two fasteners per bracket, fabricated from metal noncorrosive to brackets and adjoining construction; type designed for securing to supporting substrate; and supporting blinds and accessories under conditions of normal use.

F. Color-Coated Finish:

1. Metal: For components exposed to view, apply manufacturer's standard baked finish complying with manufacturer's written instructions for surface preparation including pretreatment, application, baking, and minimum dry film thickness.

## PART 3 - EXECUTION

### 3.1 EXAMINATION

A. Examine substrates, areas, and conditions, with Installer present, for compliance with requirements for installation tolerances, operational clearances, and other conditions affecting performance.

1. Proceed with installation only after unsatisfactory conditions have been corrected.

### 3.2 INSTALLATION

A. Install horizontal louver blinds level and plumb, aligned and centered on openings, and aligned with adjacent units according to manufacturer's written instructions. BLINDS ARE TO BE REMOTELY OPERATED.

1. Install mounting and intermediate brackets to prevent deflection of head rails.

### 3.3 ADJUSTING

A. Adjust horizontal louver blinds to operate free of binding or malfunction through full operating ranges.

## 3.4 CLEANING AND PROTECTION

A. Clean horizontal louver blind surfaces after installation according to manufacturer's written instructions.

B. Provide final protection and maintain conditions in a manner acceptable to manufacturer and Installer and that ensures that horizontal louver blinds are without damage or deterioration at time of Final Completion.

C. Replace damaged horizontal louver blinds that cannot be repaired in a manner approved by Architect before time of Final Completion.

END OF SECTION 122113

# SECTION 123200 - MANUFACTURED WOOD CASEWORK

## PART 1 - GENERAL

### 1.1 RELATED DOCUMENTS

A. Drawings and general provisions of the Contract, including General and Supplementary Conditions and Division 01 Specification Sections, apply to this Section.

### 1.2 SUMMARY

A. Section Includes:

1. Plastic-laminate-faced wood cabinets.
2. Plastic-laminate countertops.
3. Technology rack within plastic laminate cabinets.

B. Related Sections:

1. Division 06 Section "Miscellaneous Rough Carpentry" for wood blocking for anchoring manufactured wood casework.
2. Division 09 Section "Non-Structural Metal Framing" for reinforcements in metal-framed partitions for anchoring manufactured wood casework.
3. Division 09 Section "Resilient Base and Accessories" for resilient base applied to manufactured wood casework.

### 1.3 DEFINITIONS

A. MDF: Medium-density fiberboard. 47# min.

B. Exposed Portions of Cabinets: Surfaces visible when doors and drawers are closed, including bottoms of cabinets more than 48 inches above floor, and surfaces visible in open cabinets.

C. Semiexposed Portions of Cabinets: Surfaces behind opaque doors, such as interiors of cabinets, shelves, dividers, interiors and sides of drawers, and interior faces of doors. Tops of cases 78 inches or more above floor are defined as semiexposed.

D. Concealed Portions of Cabinets: Surfaces not usually visible after installation, including sleepers, web frames, dust panels, and ends and backs that are placed directly against walls or other cabinets.

E. Hardwood Plywood: A panel product composed of layers or plies of veneer, or of veneers in combination with lumber core, hardboard core, MDF core, or particleboard core, joined with adhesive, and faced both front and back with hardwood veneers.

## 1.4 SUBMITTALS

A. Product Data: For each type of product indicated.

B. Shop Drawings: Include plans, elevations, sections, details, and attachments to other work. Show fabrication details, including types and locations of hardware. Show installation details, including field joints and filler panels. Indicate manufacturer's catalog numbers for casework.

C. Samples for Verification: 8-by-10-inch Samples for each type of finish, including top material and the following:

1. Section of countertop showing top, front edge, and backsplash construction.
2. One full-size finished base cabinet complete with hardware, doors, and drawers, but without countertop.
3. One full-size finished wall cabinet complete with hardware, doors, and adjustable shelves.
4. Maintain full-size Samples at Project site during construction in an undisturbed condition as a standard for judging the completed Work. Unless otherwise indicated, approved sample units may become part of the completed Work if in undisturbed condition at time of Substantial Completion. Notify Architect of their exact locations.

D. Qualification Data: For qualified Installer.

E. Warranty: Sample of special warranty.

## 1.5 QUALITY ASSURANCE

A. Manufacturer Qualifications: A qualified manufacturer that is certified for chain of custody by an FSC-accredited certification body.

B. Installer Qualifications: Manufacturer's authorized representative who is trained and approved for installation of units required for this Project.

C. Source Limitations: Obtain manufactured wood casework from single source from single manufacturer.

D. Forest Certification: Fabricate cabinets and countertops with wood and wood-based products produced from wood obtained from forests certified by an FSC-accredited certification body to comply with FSC STD-01-001, "FSC Principles and Criteria for Forest Stewardship."

E. Quality Standard: Unless otherwise indicated, comply with requirements for modular cabinets in AWI's "Architectural Woodwork Quality Standards."

1. Provide AWI Quality Certification Program certificate indicating that manufactured wood casework complies with requirements.

F. Product Designations: Drawings indicate sizes, configurations, and finish material of manufactured wood casework by referencing designated manufacturer's catalog numbers. Other manufacturers' casework of similar sizes and door and drawer configurations, of same finish

material, and complying with the Specifications may be considered. Refer to Division 01 Section "Product Requirements."

## 1.6 DELIVERY, STORAGE, AND HANDLING

A. Deliver manufactured wood casework only after painting, utility roughing-in, and similar operations that could damage, soil, or deteriorate casework have been completed in installation areas. If casework must be stored in other than installation areas, store only in areas where environmental conditions meet requirements specified in "Project Conditions" Article.

B. Keep finished surfaces covered with polyethylene film or other protective covering during handling and installation.

## 1.7 PROJECT CONDITIONS

A. Environmental Limitations: Do not deliver or install manufactured wood casework until spaces are enclosed and weathertight, wet work in spaces is complete and dry, work above ceilings is complete, and temporary HVAC system is operating and maintaining ambient temperature and humidity conditions at occupancy levels during the remainder of the construction period.

B. Environmental Limitations: Do not deliver or install manufactured wood casework until building is enclosed, wet work is complete, and HVAC system is operating and maintaining temperature between 60 and 90 deg F and relative humidity between 43 and 70 percent during the remainder of the construction period.

C. Field Measurements: Verify actual dimensions of construction contiguous with manufactured wood casework by field measurements before fabrication.

## 1.8 COORDINATION

A. Coordinate layout and installation of framing and reinforcements in walls and partitions for support of manufactured wood casework.

## 1.9 WARRANTY

A. Special Warranty: Manufacturer's standard form in which manufacturer agrees to repair or replace components of manufactured wood casework that fail in materials or workmanship within specified warranty period.

1. Failures include, but are not limited to, the following:

   a. Delamination of components or other failures of glue bond.
   b. Warping of components.
   c. Failure of operating hardware.
   d. Deterioration of finishes.

2. Warranty Period: Five years from date of Final Completion.

1.10 EXTRA MATERIALS

A. Furnish complete touchup kit for each type and finish of manufactured wood casework provided. Include scratch fillers, stains, finishes, and other materials necessary to perform permanent repairs to damaged casework finish.

PART 2 - PRODUCTS

2.1 MANUFACTURERS

A. Manufacturers:

1. Beechwood E.S. and Etna E.S.: Stevens Industries, Inc.
2. Kae Avenue E.S.: Case Systems, Inc.

2.2 MATERIALS, GENERAL

A. Low-Emitting Materials: Provide manufactured wood casework, including countertops, made with adhesives and composite wood products containing no urea formaldehyde.

B. Maximum Moisture Content for Lumber: 7 percent for hardwood and 12 percent for softwood.

C. Hardwood Plywood: HPVA HP-1, either veneer core or particleboard core unless otherwise indicated.

D. Particleboard: ANSI A208.1, Grade M-2.

1. Recycled Content: Not less than 25 percent preconsumer recycled content.

E. Particleboard: Straw-based particleboard complying with ANSI A208.1, Grade M-2, except for density.

F. MDF: ANSI A208.2, Grade 130.

1. Recycled Content: Not less than 25 percent preconsumer recycled content.

G. Hardboard: AHA A135.4, Class 1 Tempered.

1. Recycled Content: Not less than 25 percent preconsumer recycled content.

H. Plastic Laminate: High-pressure decorative laminate complying with NEMA LD 3.

1. Manufacturers: Subject to compliance with requirements, provide products by one of the following:

a. Formica Corporation.
b. Nevamar Company, LLC; Decorative Products Div.
c. Panolam Industries International Incorporated.

d. Wilsonart International; Div. of Premark International, Inc.

I. Thermoset Decorative Panels: Particleboard or MDF finished with thermally fused, melamine-impregnated decorative paper complying with LMA SAT-1.

J. Edgebanding for Plastic Laminate: Rigid PVC extrusions, through color with satin finish, 3 mm thick at doors and drawer fronts, 1 mm thick elsewhere.

K. Cold-Rolled Steel Sheet: ASTM A 1008/A 1008M, suitable for exposed applications.

L. Stainless-Steel Sheet: ASTM A 240 or ASTM A 666, Type 304, with No. 4 satin finish.

## 2.3 TECHNOLOGY CABINET

A. General: EIA Compliant. 19" cabinet frame shall be 19.25" w. Pack shall have weight capacity for 250 lbs. Constructed of 11 gauge steel with 10-32 mounting holes in universal EIA spacing. UL Listed and Rotts EU Directive 2002/95 EC Compliant.

B. Install within Cabinet **T-33** at upper door portion. Allow for all electrical and data connections. Manufacturer: Middle Atlantic Products.

1. CFR-14-8

a. Overall Height: 25.44 inches.
b. Racking Height: 24-50
c. Rack Spaces: 14.

## 2.4 CABINET MATERIALS

A. Exposed Cabinet Materials:

1. Plastic Laminate: Grade HGS.
2. Unless otherwise indicated, provide specified edgebanding on all exposed edges.

B. Semiexposed Cabinet Materials:

1. Plastic Laminate: Grade VGS.

a. Provide plastic laminate for semiexposed surfaces unless otherwise indicated.
b. Provide plastic laminate for interior faces of doors and drawer fronts and where indicated.

2. Unless otherwise indicated, provide specified edgebanding on all semiexposed edges.

C. Concealed Cabinet Materials:

1. Solid Wood: Any hardwood or softwood species, with no defects affecting strength or utility.
2. Plywood: Hardwood plywood. Provide backs of same species as faces.

3. Plastic Laminate: Grade BKL.

## 2.5 DESIGN, COLOR, AND FINISH

A. Design: Provide manufactured wood casework of the following design:

1. Flush overlay with wire pulls.

B. Plastic-Laminate Colors, Patterns, and Finishes: As indicated by manufacturer's designations.

1. Vertical Surface: (Basis of Design) (PL-1) Wilsonart / Fusion Maple #7909-60
2. Horizontal Surface: (Basis of Design) (PL-2) Match existing.

C. PVC Edgebanding:

1. Manufacturer: Woodtape / Hard Rock Maple #4125.

## 2.6 CABINET FABRICATION

A. Plastic-Laminate-Faced Cabinet Construction: As required by referenced quality standard, but not less than the following:

1. Bottoms and Ends of Cabinets, and Tops of Wall Cabinets and Tall Cabinets: 3/4-inch particleboard, plastic-laminate faced.
2. Shelves: 3/4-inch particleboard, plastic-laminate faced on exposed surfaces.
3. Backs of Cabinets: 1/2-inch particleboard, plastic-laminate faced on exposed surfaces, thermoset decorative panels on semiexposed surfaces.
4. Drawer Fronts: 3/4-inch particleboard, plastic-laminate faced.
5. Drawer Sides and Backs: 1/2-inch thermoset decorative panels, with glued dovetail or multiple-dowel joints.
6. Drawer Bottoms: 1/4-inch thermoset decorative panels glued and dadoed into front, back, and sides of drawers. Use 1/2-inch material for drawers more than 24 inches wide.
7. Drawer Bodies: Steel drawer pans formed from 0.0359-inch- thick metal, metallic phosphate treated, and finished with manufacturer's standard 2-coat, baked-enamel finish consisting of prime coat and thermosetting topcoat with a minimum dry film thickness of 1 mil for topcoat and 2 mils for system.
8. Doors: 3/4-inch particleboard or MDF, plastic-laminate faced.

B. Leg Shoes: Vinyl or rubber, black, open-bottom type.

C. Filler Strips: Provide as needed to close spaces between cabinets and walls, ceilings, and indicated equipment. Fabricate from same material and with same finish as cabinets.

## 2.7 CASEWORK HARDWARE AND ACCESSORIES

A. Hardware, General: Unless otherwise indicated, provide manufacturer's standard satin-finish 012 powder-coated, commercial-quality, heavy-duty hardware.

1. Use threaded metal or plastic inserts with machine screws for fastening to particleboard except where hardware is through-bolted from back side.

B. Butt Hinges: Powder-coated, semi-concealed, 5-knuckle hinges complying with BHMA A156.9, Grade 1, with antifriction bearings and rounded tips. Provide 2 hinges for doors less than 48 inches high and 3 hinges for doors more than 48 inches high.

C. Pulls: Solid aluminum wire pulls, fastened from back with two screws. For sliding doors, provide recessed stainless-steel flush pulls. Provide 2 pulls for drawers more than 24 inches wide.

D. Door Catches: Zinc-plated, Powder-coated, nylon-roller spring catch. Provide 2 catches on doors more than 48 inches high.

E. Drawer Slides: BHMA A156.9, Type B05091.

1. Heavy Duty (Grade 1HD-200): Side mounted; full-overtravel-extension type; zinc-plated, steel ball-bearing slides.
2. Door Pocketing Hardware: Cabinet Mounted: Heavy duty steel ball bearing construction.
3. Box Drawer Slides: Grade 1, for drawers not more than 6 inches high and 24 inches wide.
4. File Drawer Slides: Grade 1HD-200, for drawers more than 6 inches high or 24 inches wide.
5. Pencil Drawer Slides: Grade 1, for drawers not more than 3 inches high and 24 inches wide.

F. Drawer and Hinged Door Locks: Cylindrical (cam) type, 5-pin disc with changeable core, brass with chrome-plated finish, and complying with BHMA A156.11, Grade 1.

1. Provide a minimum of two keys per lock and six master keys.
2. Provide locks on all doors and drawers.

G. Adjustable Shelf Supports: 2-pin locking plastic shelf rests complying with BHMA A156.9, Type B04013.

H. Grommets for Cable Passage through Countertops: 2-inch OD, brown or black, molded-plastic grommets and matching plastic caps with slot for wire passage.

## 2.8 COUNTERTOPS

A. Countertops, General: Provide smooth, clean exposed tops and edges in uniform plane free of defects. Provide front and end overhang of 1 inch over base cabinets.

B. Plastic-Laminate Tops: Plastic-laminate sheet, shop bonded to both sides of 1-1/8-inch plywood or particleboard. Sand surfaces to which plastic laminate is to be bonded.

1. Plastic Laminate for Flat Tops: Grade HGS.
2. Plastic Laminate for Backing: Grade BKL.

3. Provide 3-mm PVC edging on front edge of top, on top edges of backsplashes and end splashes, and on ends of tops and splashes.
4. Use exterior plywood or exterior glue particleboard for countertops containing sinks.

## PART 3 - EXECUTION

### 3.1 EXAMINATION

A. Examine areas, with Installer present, for compliance with requirements for installation tolerances, location of framing and reinforcements, and other conditions affecting performance of manufactured wood casework.

B. Proceed with installation only after unsatisfactory conditions have been corrected.

### 3.2 CASEWORK INSTALLATION

A. Install level, plumb, and true; shim as required, using concealed shims. Where manufactured wood casework abuts other finished work, apply filler strips and scribe for accurate fit, with fasteners concealed where practical.

B. Base Cabinets: Set cabinets straight, level, and plumb. Adjust subtops within 1/16 inch of a single plane. Fasten cabinets to masonry or framing, wood blocking, or reinforcements in walls and partitions with fasteners spaced 24 inches o.c. Bolt adjacent cabinets together with joints flush, tight, and uniform. Align similar adjoining doors and drawers to a tolerance of 1/16 inch.

1. Where base cabinets are not installed adjacent to walls, fasten to floor at toe space with fasteners spaced 16 inches o.c. Secure sides of cabinets to floor, where they do not adjoin other cabinets, with not less than two fasteners.

C. Wall Cabinets: Hang cabinets straight, level, and plumb. Adjust fronts and bottoms within 1/16 inch of a single plane. Fasten to hanging strips, masonry, or framing, blocking, or reinforcements in walls or partitions. Align similar adjoining doors to a tolerance of 1/16 inch.

1. Fasten through back, near top and bottom, at ends, and not more than 16 inches o.c.
2. Use toggle bolts at hollow masonry.
3. Use expansion anchors at solid masonry.
4. Use No. 10 wafer-head screws sized for 1-inch penetration at wood hanging strips.
5. Use No. 10 wafer-head screws sized for 1-inch penetration into wood framing or blocking at wood-framed partitions.
6. Use No. 10 wafer-head sheet metal screws through metal backing or metal framing behind wall finish at metal-framed partitions.

D. Install hardware uniformly and precisely. Set hinges snug and flat in mortises unless otherwise indicated. Adjust and align hardware so moving parts operate freely and contact points meet accurately. Allow for final adjustment after installation.

E. Adjust casework and hardware so doors and drawers operate smoothly without warp or bind. Lubricate operating hardware as recommended by manufacturer.

## 3.3 INSTALLATION OF TOPS

A. Field Jointing: Where possible make in the same manner as shop jointing, using dowels, splines, adhesives, and fasteners recommended by manufacturer. Prepare edges to be joined in shop so Project-site processing of top and edge surfaces is not required. Locate field joints where shown on Shop Drawings.

1. Secure field joints in plastic-laminate countertops with concealed clamping devices located within 6 inches of front and back edges and at intervals not exceeding 24 inches. Tighten according to manufacturer's written instructions to exert a constant, heavy-clamping pressure at joints.

B. Secure tops to cabinets with Z- or L-type fasteners or equivalent, using two or more fasteners at each front, end, and back.

C. Abut top and edge surfaces in one true plane, with internal supports placed to prevent deflection.

D. Secure backsplashes and end splashes to tops with concealed metal brackets at 16 inches o.c. and walls with adhesive.

E. Seal junctures of tops, splashes, and walls with mildew-resistant silicone sealant or another permanently elastic sealing compound recommended by countertop material manufacturer.

## 3.4 CLEANING AND PROTECTING

A. Repair or remove and replace defective work as directed on completion of installation.

B. Clean finished surfaces, touch up as required, and remove or refinish damaged or soiled areas to match original factory finish, as approved by Architect.

C. Protection: Provide 6-mil plastic or other suitable water-resistant covering over countertop surfaces. Tape to underside of countertop at a minimum of 48 inches o.c. Remove protection at Final Completion.

## 3.5 SCHEDULE FOLLOWS

# DIVISION 21

# FIRE SUPPRESSION INDEX

## 21 00 00 FIRE SUPPRESSION


| | |
|---|---|
| Common Work Results for Fire Suppression | 21 05 00-1 thru 18 |
| Fire-Suppression Submittals | 21 05 06-1 thru 4 |
| Fire-Suppression Operating and Maintenance Manuals | 21 05 07-1, 2 |
| Fire-Suppression Sleeves | 21 05 15-1 thru 4 |
| General-Duty Valves for Water-Based Fire-Suppression Piping | 21 05 23-1 thru 3 |
| Hangers & Supports for Fire-Suppression Piping & Equipment | 21 05 29-1 thru 5 |
| Identification for Fire-Suppression Piping and Equipment | 21 05 53-1, 2 |
| Requirements for Completion of Fire-Suppression Work | 21 05 60-1 thru 3 |


## 21 10 00 WATER-BASED FIRE SUPPRESSION SYSTEMS


| | |
|---|---|
| Water-Based Fire Suppression Systems | 21 10 00-1 thru 10 |
| Wet-Pipe Sprinkler Systems | 21 13 13-1 thru 4 |

# SECTION 21 05 00

# COMMON WORK RESULTS FOR FIRE SUPPRESSION

## PART 1 GENERAL

### 1.01 PREFACE

A. Fire Suppression Contractor is responsible for the Work described in Division 21, "Fire Suppression," Sections 21 00 00 through 21 99 99 (as included), unless otherwise noted.

B. **Terminology:** In the Sections listed above, the term "Contractor" shall mean the Fire Suppression Contractor performing Work on this Project, unless otherwise noted.

C. The provisions listed in this Section shall supersede any conflicting statements contained elsewhere in the Specifications. Contractor is responsible for the more restrictive requirement between these general provisions and other requirements contained elsewhere in the Specifications.

### 1.02 RELATED DOCUMENTS

A. Refer to the following additional Divisions and Sections for specific requirements, responsibilities, and methods relating to Division 21 Work:
   1. Division 00, "Procurement and Contracting Requirements": All sections.
   2. Division 01, "General Requirements": All sections.
   3. Division 07, "Thermal and Moisture Protection," Section 07 92 00, "Joint Sealants."
   4. Division 09, "Finishes," Section 09 91 00, "Painting."

### 1.03 DESCRIPTION

A. Furnish material, labor, tools, accessories, and equipment to complete and leave ready for operation all fire-suppression systems of this Project as described in these Specifications and as shown on the Drawings.

B. Use sufficient workers and competent supervisors in execution of this portion of the Work to ensure proper and adequate installation throughout. In the acceptance or rejection of installed fire suppression system, no allowance will be made for lack of skill on the part of workers.

C. Work includes, but is not limited to, the following:
   1. Painting of exposed piping, valves, etc.
   2. Water-based fire suppression system:
      a. Hydraulic design and pipe sizing.
      b. Wet-pipe sprinkler system.

D. Work Not Included: General Trades Contractor shall provide the following work:
   1. Fire extinguishers and fire extinguisher cabinets.
   2. Site work: General Trades Contractor shall be responsible for all site work.

E. Additional Work Considerations: Available water flow:
   1. Water flow test data was obtained from the City of Columbus Division of Water, performed on fire hydrants located on Langley Avenue, tested May 2009, indicated 69 PSI static, 45 PSI residual at 1,620 GPM. This unconfirmed data is rough and is presented only for the Contractor's general information.
   2. Contractor shall certify that test results are correct and acceptable before performing pipe-sizing calculations, shall independently verify water flow data, and shall conduct its own testing if required.

F. The fire suppression system shall not be considered complete and acceptable unless, and until, all Code and Governing Agency requirements are satisfied.

G. Refer to Division 01 and Section 21 05 60, "Requirements for Completion of Fire Suppression Work," for additional requirements.

## 1.04 SPRINKLER LAYOUT DRAWINGS

A. Submit shop drawings for the installation of the fire suppression system for approval by the Code Authority having Jurisdiction, before any fire suppression work is installed, enlarged, or extended. Under **NO** circumstances shall any Work be performed prior to receiving shop drawings approved by the Code Authority having Jurisdiction.

B. Sprinkler Layout Drawings and Hydraulic Calculations:
   1. Before any work is started, prepare dimensioned sprinkler layout drawings showing new pipe runs and sizes, sprinkler locations, valves, and accessories. Show lights, smoke detectors, speakers, diffusers/grilles, heating equipment, and structural elements in light background on the reflected ceiling plans, with sprinklers and piping shown in dark/heavy lines or symbols. Verify the final hazard classification for each area even though the documents may call for certain hazard classifications.
   2. Provide sprinkler coverage for new building addition, whether or not that area is indicated on the Drawings.
   3. Submit (2) copies of sprinkler layout drawings and hydraulic calculations for review by the Architect.
   4. Resubmit layout drawings if changes are made as a result of the Architect's review of the layout drawings.

5. After receiving initial approval by the Architect, submit (2) copies of sprinkler layout drawings and hydraulic calculations, signed by a State-Certified Fire Suppression Designer, for final approval by the following office(s):
   a. City of Whitehall Building Department.
   b. City of Whitehall Fire Department.
6. Submit a final copy of the approved sprinkler layout drawings and calculations to the Architect for record purposes.

## 1.05 COORDINATION OF WORK

A. Contractor shall read the entire Specification covering other branches of the Work. It will be held responsible for the coordination of its work with the work performed by other Trades.

B. Contractor shall coordinate its Work carefully with all other Contractors.

C. Do not install work without first coordinating the layout, routing, etc., with other Contractors whose work may be affected.

D. Submit sprinkler layout drawings to affected Contractors for their review and coordination before fabricating or installing system.

E. Coordinate any and all changes in sprinkler layout with all other Contractors.

F. Notify the Architect immediately of any changes in location or other conflicts that may affect either the fire suppression coverage or the work of other Contractors.

G. Coordinate location of all work with other Contractors and equipment.

H. Consult all Contract Drawings that may affect the location of any equipment, apparatus, and piping, and make any other adjustments in location as necessary to secure coordination.

I. Coordinate locations of all Fire Suppression Work with piping, hangers, ductwork, diffusers, grilles, registers, lighting fixtures, smoke and heat detectors, speakers, occupancy sensors, conduits, cable trays, and other equipment, and with ceilings, soffits, structural members, joists, metal decks, bracing, etc.

J. Contractor shall be responsible for the cost of additional engineering work required for changes to the work as shown or described, due to the relocation of items requested by the Contractor.

K. Review all equipment nameplate ratings and advise the Architect immediately of any system design changes required to wire the equipment properly.

## 1.06 EXAMINATION OF SITE

A. Certain existing conditions may affect the manner or sequence of the performance of the Work.

B. Before submitting its Bid, the Contractor should visit the site of the proposed Project.

C. Existing services, structures, and operating schedules may need to be reviewed, prior to bidding, to facilitate the installation of the Work without disrupting the normal operation of the facility.

D. After receipt of Bids, no allowances will be made for lack of knowledge of Project conditions.

E. Verify and reconcile Work required by the Contract Documents with existing conditions at the Site.

F. Should the Contractor note any discrepancies during the Bidding Period, it shall notify the Architect immediately, in writing, to permit issuance of an Addendum to prevent misunderstandings at a later date.

## 1.07 STANDARDS OF QUALITY

A. It is the intent that the Fire Suppression Work be complete in every respect.

B. All work on this Project shall conform to applicable National, State, and Local Building Codes and any local laws, ordinances, regulations, and requirements pertaining to this work.

C. Contractor shall provide Work of the highest quality, conforming to the accepted practices and standards of the Trades involved.

D. Further definition of quality is given by reference to various Laws, Codes, Standards, and Regulations.

E. Only a Contractor and craftsmen licensed by the State as required shall install this Fire Suppression Work.

F. Licensed Contractors shall perform Work as required by State Codes.

G. Code references, when made, shall be based upon the currently enforced Edition.

H. Install Work in compliance with the Latest Enforced Edition of all applicable Codes, Regulations, and Standards, unless otherwise noted.

I. Any Law, Code, Standard, or Regulation referred to in other Sections of Division 21 is included in its entirety as a part of these Specifications.

J. Give notice and comply with all Laws, Ordinances, Rules, Regulations, and lawful orders of the Code Authority having Jurisdiction bearing on the performance of the Fire Suppression Work.
   1. If the Contractor observes that any of the Contract Documents are at variance therewith in any respect, it shall promptly notify the Architect in writing, and any necessary changes will be arranged by the Architect.
   2. If the Contractor performs any Work knowing it to be contrary to such Laws, Ordinances, Rules, and Regulations, and fails to give prior

notice to the Architect, the Contractor shall assume full responsibility for, and shall bear all costs associated with, correcting the Work.

K. Obtain all permits, licenses, and certifications required by the Code Authority having Jurisdiction.

L. The following Codes apply to this Work:
   1. Local: City of Whitehall:
      a. Building Code.
      b. Fire Code.
   2. State of Ohio: Ohio Administrative Code (OAC):
      a. OAC 1301:7-7: 2011 Ohio Fire Code.
      b. OAC 4101:1: 2011 Ohio Building Code.
   3. National:
      a. National Fire Protection Association (NFPA), Current Edition. Codes as listed in subsequent Specification Sections, including the following:
         1) 2007 NFPA 13, "Standard for the Installation of Sprinkler Systems."
         2) 2011 NFPA 70, "National Electrical Code® (NEC)."
      b. Americans with Disabilities Act (ADA) (36 CFR 1191).
      c. American Society of Mechanical Engineers (ASME) Welding Code B31.1.0.

M. Methods and materials shall be certified where noted in the individual Specification Sections.

N. All equipment and appliances installed on this Project shall bear the label of an Approved Testing Agency, and shall be installed in accordance with the Manufacturer's instructions for the labeled equipment and appliances.

O. All structural steel used on this Project shall be manufactured in the United States, per Ohio Revised Code 153.011.

## 1.08 CONTRACT DRAWINGS

A. The Contract Drawings are schematic and show approximate locations, general arrangement, and general extent of Work. Not all items of work required for a complete and operating system are shown on the Drawings, for example, piping, etc. Refer also to the Specifications for additional work that shall be provided. If a conflict occurs, the Contractor is responsible for the more restrictive requirement.

B. The Contract Drawings are not intended to show every vertical or horizontal offset that may be necessary to complete the systems. Having piping and fittings fabricated and delivered in advance of making actual measurements shall not be sufficient cause to avoid making offsets or other changes as may be necessary to install piping and equipment.

C. Verify exact locations in the field, and coordinate with all other Contractors.

D. The Architect shall approve, in writing, significant deviations from the Drawings.

E. The Architect reserves the right to make minor changes in location that do not require additional labor or material, up to the time of roughing-in, without additional cost. The Architect reserves the right to determine what is "significant" and what is "minor."

F. If a conflict occurs between the Drawings and Specifications, immediately submit a written request for an interpretation or clarification from the Architect, who shall determine which interpretation has precedence.

G. Should overlap of work among the Trades become evident, immediately submit a written request for an interpretation or clarification from the Architect, who shall determine which interpretation has precedence. In such event, none of the Contractors shall assume that it is relieved of the Work that is specified under its branch unless instructions are received, in writing, from the Architect.

## 1.09 APPLICABLE CODES, LICENSES, PERMITS, FEES, AND NOTICES

A. The Construction Manager will submit all Contract Drawings and Specifications to the City of Whitehall Building Department, to secure Plan Approval, and obtain the Plan Approval Certificate.

B. Contractor shall secure and pay for any **ADDITIONAL** permits, governmental fees, bonds, licenses, and inspections required for the proper execution and completion of the Fire Suppression Work.

C. It may be necessary to fully complete several portions of Work in one area, before other areas are started.

D. Contractor shall arrange and pay for all inspections required to obtain a Certificate of Beneficial Occupancy. Contractor shall include this cost in its bid.

## 1.10 CONTRACTOR'S RESPONSIBILITY

A. Provide a Superintendent, on site, whose duties include the directing and supervising of work. Inform the Architect of the Superintendent's name and phone number, and the method of contact when the Superintendent is not at the site.

B. As soon as possible after the Award of the Contract and the approval of Shop Drawings, the Contractor shall place orders for materials and equipment required for its Work. Immediately inform the Architect in writing as to any materials and equipment that cannot be obtained within the required time period, either due to conditions of the market or other governing factors.

C. Inspect each item of materials or equipment immediately prior to installation. Reject damaged and defective items.

D. Contractor shall determine erection procedures and sequence the construction to keep its work on schedule and to ensure the safety of the building and its occupants. This includes supplying whatever temporary bracing, guys, or tie-downs might be required. Such materials shall remain the Contractor's property after completion of the Project.

E. Provide attachment and connection devices and methods for securing work. Secure all work true to line and level and within recognized industry tolerances. Allow for expansion and building movement.

F. Recheck measurements and dimensions of the Work as an integral step of starting each installation.

G. Where mounting heights are not indicated, individual units generally can be mounted at industry-recognized standard mounting heights for the particular application indicated. However, the Architect must approve all mounting heights.

H. Coordinate the enclosure or concealment of the Work with the required inspections and tests so as to minimize the necessity of uncovering work for that purpose.

## 1.11 GUARANTEES AND WARRANTIES

A. Contractor shall guarantee its equipment, workmanship, and materials for a period of (1) year from the date of Contract Completion. Should defects develop within this period, the Contractor shall, at no cost to the Owner, remedy the defects and reimburse the Owner for all damage to other Work caused either by the defects or as a result of the work of correcting the same.

B. Refer also to Division 01 and other Specification Sections that define the starting date of the guarantee period, or that discuss either additional warranty requirements, or extended equipment warranties beyond the standard period.

## 1.12 PROJECT RECORD DOCUMENTS

A. Contractor shall maintain, at the job site, (1) copy of the following items related to its Trade:
   1. Contract Drawings.
   2. Specifications.
   3. Addenda.
   4. Reviewed Shop Drawings.
   5. Change Orders.
   6. Other modifications to Contract.
   7. Field Test Records.
   8. Minutes of Coordination and Progress Meetings.
   9. (1) set of the Contract Drawings that will be used for Record (as-built) Drawings. This set shall be used exclusively for documenting and recording the exact location of all installed Work.

B. Do not use record documents for construction purposes.

C. Store record documents in temporary field office, apart from documents used for construction.

D. Provide files and racks for storage of record documents.

E. Maintain record documents in clean, dry, legible condition.

F. Use red ballpoint pen for all marking of record documents.

G. Make record documents available at all times for inspection by the Architect and Construction Manager.

H. Record Drawings:
   1. Record Drawings shall be legibly marked to record actual construction with the following information:
      a. Location of internal utilities and appurtenances concealed in construction referenced to visible and accessible features of structure.
      b. Field changes of dimension and detail.
      c. Changes made by Field Work Order or Change Order.
      d. Details not on the original Contract Drawings.
   2. Do not permanently conceal any work until the required information has been recorded.
   3. Record deviations in locations of concealed piping, valves, equipment, and all concealed utility lines and services, etc., dimensioned from a fixed control point, including the following:
      a. At each change of direction.
      b. At each change of slope.
      c. As required for further reference.
   4. Minor piping variations need not be recorded.
   5. Record deviations made necessary to incorporate equipment different from the Design Base equipment.
   6. Record all Addendum Items.
   7. Add valve tag numbers to the Record Drawings.
   8. At completion of project, the Contractor shall deliver (1) copy of its Record Drawings to the Construction Manager.
   9. Contractor shall accompany its Record Drawings with a transmittal letter, in duplicate, containing the following information:
      a. Date.
      b. Project title and number.
      c. Contractor’s name and address.
      d. Title and number of each record document.
      e. Certification that each document as submitted is complete and accurate.
      f. Signature of the Contractor or its Authorized Representative.

## 1.13 ABBREVIATIONS AND SYMBOLS

A. Titles and abbreviations may be used in these Specifications. Abbreviations may be shown on the Fire Suppression Drawings. Refer to the list of abbreviations attached to this Section. Refer also to the symbols lists shown on the Drawings for further abbreviations. All titles and abbreviations may not necessarily apply to this Work.

## 1.14 DEFINITIONS

A. "Provide": To furnish, install, and connect to make completely ready for regular operation.

B. "Furnish": To supply or deliver to site complete with all required accessories and installation instructions.

C. "Install": To mount, erect, hang, or fasten in place, and connect to make ready for regular operation.

D. "Concealed": Either embedded in masonry or other construction, or installed behind wall furring, within chases or soffits, within walls, within double partitions, or above ceilings.

E. "Exposed": In full or partial view; not "Concealed" as defined above.

F. "Accessible Ceiling": Lay-in ceiling with removable ceiling tiles.

G. "Piping": Pipe, fitting, flanges, valves, controls, specialties, hangers, bracing, insulation, and other items required or necessary.

H. Refer to additional Definitions in Division 01 and in the State Building and Mechanical Codes.

# PART 2 PRODUCTS

## 2.01 DESIGN BASE MANUFACTURER STANDARD

A. The Drawings and Specifications reflect a design based on the specific equipment requirements and configuration for a Design Base Manufacturer. Design coordination of equipment with the building and with other Trades has been made for this specific Model and Manufacturer of equipment. Where several Manufacturers are listed for an item of equipment or material, the first-named shall be considered the Design Base Manufacturer Standard.

## 2.02 OTHER ACCEPTABLE COMPONENTS (MANUFACTURERS)

A. Other Manufacturers listed in the Specifications shall be acceptable; however, whenever the Contractor elects to furnish specified equipment or material manufactured by other than the Design Base Manufacturer, the Contractor shall be responsible for the cost and coordination of all modifications required to accommodate the elected equipment or material, including any Work of other Trades that might be affected. Where changes

to other Trades' Work are required, the Contractor shall include the additional costs of all such Work in its bid.

B. Any specified Equipment Manufacturer furnished by the Contractor, other than the Design Base Manufacturer, shall be, in the opinion of the Architect, equivalent in quality, design, features, performance, arrangement, and appearance to that of the Design Base equipment or material, including any special features or requirements.

C. The inclusion of other Manufacturers in these Specifications shall not be construed to infer that each Manufacturer's product has been reviewed by the Architect for this application, or that it will provide all the features or capabilities required, or that its physical dimensions can be accommodated in the available space. Verify that the proposed equipment will provide all features and accommodations provided by the Design Base Manufacturer, and that it will fit in the available space.

D. Where deemed necessary by the Architect, the Contractor shall, at no additional cost to the Owner, prepare layouts for these other brands of equipment that may have different dimensional or service requirements from the Design Base Manufacturer Standard. Submit these layouts to the Engineer for review.

E. Reimburse the Owner for the cost of any design changes incurred by the Architect in the preparation of revised Drawings or Specifications to accommodate the use of any Manufacturer other than the Design Base Manufacturer.

F. The Architect will not give consideration to any other Manufacturer that the Contractor proposes to use, unless the Architect approves the Manufacturer, and specifically names the Manufacturer in the Addenda to the Specifications.

## 2.03 SUBSTITUTIONS

A. Contractor shall submit information for review no later than (10) days prior to the bid opening to the Architect on any other proposed equipment or material that the Contractor desires to use.

B. Contractor shall be responsible for the same costs of coordination and modifications, etc., listed above in Paragraph 2.02, "Other Acceptable Components (Manufacturers)."

C. If the Architect determines that the proposed Manufacturer is acceptable, the Architect will issue an Addendum adding that Manufacturer to the Specification.

## 2.04 EQUIPMENT SUITABILITY

A. All equipment provided shall perform as intended. All items listed shall function properly, and as the Manufacturer intended. Install equipment according to the Manufacturer's recommendations. Properly attach equipment to the floor, wall, or structure. Each item of equipment shall be

compatible with all other accessories or hook-ups, including piping, wiring, and other equipment not furnished by the equipment Manufacturer, but required to achieve the intended function.

## 2.05 MISCELLANEOUS ACCESSORIES

A. Provide any additional adapters, fittings, trim, structural steel angles, channels, unistrut, brackets, etc., as necessary to securely install all items of equipment specified or shown on the Drawings. All steel installed outside or exposed to moisture shall be hot-dipped galvanized.

B. These accessories are required even though they may not be shown or detailed on the Drawings.

C. Installation shall be compatible with the building construction on which the item is to be located.

D. Verify the type of construction prior to ordering the equipment item, so that all required accessories are included.

## 2.06 QUANTITIES

A. Equipment may be referred to in these Specifications, or on the Drawings, as either singular or plural; the Contractor shall verify the exact number of items required to complete its Work.

## 2.07 EQUIPMENT PROTECTION

A. Unless equipment and material can be protectively stored in a manner acceptable to the Architect, they shall not be delivered to the site until the Work is ready to receive them.

B. Protect all equipment and materials during construction from damage by weather, water, dirt, paint droppings, welding and cutting spatters, and other construction activities.

C. All materials or equipment stored outside shall be elevated and protectively covered in a secured and locked area.

D. Store materials and equipment sensitive to weather or construction conditions inside. Where necessary, store sensitive equipment in a heated area.

E. During construction, cover all equipment and other items that are susceptible to damage until they can be installed in place.

F. Immediately repair or replace damaged equipment or materials to the satisfaction of the Architect and at no additional cost to the Owner.

G. Contractor shall protect the building and other Contractors' material and equipment from damage caused by its Work. Protect floors from cutting oil and chips.

H. Use all means necessary to protect materials before, during, and after installation.

I. Refer also to individual Specification Sections for specialized protection.

## PART 3 EXECUTION

### 3.01 SAFETY

A. Maintain Project in accordance with Federal, State, and Local Safety and Insurance Standards. All procedures shall comply with the latest regulations of the Occupational Safety and Health Administration (OSHA).

B. Contractor shall provide eye and ear protection, as approved by OSHA, for each of its employees.

C. Contractor shall be solely responsible for construction means, methods, techniques, sequences, procedures, and safety precautions and programs in connection with the Work. The Owner, Construction Manager, Architect, or Engineer will not be responsible for the Contractor's failure to employ proper safety procedures.

D. Contractor shall be solely responsible for the structural design of all temporary items that it uses in the construction of the building, or that become a permanent part of the building, including, but not limited to, hoisting, the temporary bracing for structural steel, and the shoring of suspended ceilings, equipment, walls, etc.

E. Exercise precaution for the protection of persons and property. Provide guard rails, barricades, enclosures, canopies, passageways, lanterns, warning lights, and other protective safety devices as necessary or required by the Code Authorities having Jurisdiction, and as required to protect persons and property against accidentally dropped materials or other construction hazards. Provide guard lights at all barricades, railings, obstructions in the streets or sidewalks, trenches, or pits.

F. Provide protection as may be required to prevent glass breakage. Replace broken glass at no cost to the Owner.

G. Hazards Control:
   1. Do not dispose of volatile wastes, such as mineral spirits, oil, or paint thinner, in storm or sanitary drains.
   2. Store volatile wastes in covered metal containers, and remove from premises daily.
   3. Prevent accumulation of waste that creates hazardous conditions.
   4. Provide adequate ventilation during use of volatile or noxious substances.

### 3.02 AIR HANDLING PLENUMS

A. Where space is used for air handling, such as above ceilings and elsewhere, do not install combustible or noxious materials.

B. All materials shall be listed for use in air handling plenums. All wiring shall be UL 910-listed.

## 3.03 EQUIPMENT ACCESS

A. Locate all units to provide sufficient access to operate equipment or service other items requiring periodic maintenance. Coordinate with structure and with all other Contractors' work.

## 3.04 ACCESS PANELS

A. Unless otherwise noted, furnish all access panels required for concealed fire-suppression work to the General Trades Contractor for installation.

B. Mark locations of access panels on the Record Drawings.

## 3.05 BLOCK COURSE COORDINATION

A. The mounting heights of items are called out on the Drawings for many items. Adjust equipment mounting heights to accommodate brick or block coursing. Coordinate installation of all items in a masonry wall with the General Trades Contractor and Architect.

## 3.06 CUTTING AND PATCHING

A. Refer to Section 01 73 29, "Cutting and Patching," for additional requirements.

## 3.07 PAINTING AND RELATED WORK

A. **ALL PAINTING SHALL BE DONE BY A QUALIFIED TRADESMAN SKILLED IN THE CRAFT.**

B. General Trades Contractor shall be responsible for finish painting of walls, ceilings, and other Architectural items in the areas of new and existing construction.

C. Contractor shall repaint any previously finished areas or existing areas disturbed by its own cutting and patching. Painting of the patched area shall match color of the adjacent construction in the general area of the patch. Repaint the entire wall-to-wall and floor-to-ceiling surface if, in the opinion of the Architect, a uniform appearance cannot be accomplished by touch-up.

D. Clean, spot-prime with zinc chromate, and finish equal to the original quality, any factory-finished equipment that has rusted, has been damaged, or has deteriorated. Repaint the entire surface if, in the opinion of the Architect, a uniform appearance cannot be accomplished by touch-up.

E. Clean, remove rust from, and paint with zinc-chromate primer, any fire suppression support steel and bare ferrous metal that is not factory-painted, shop-painted, or galvanized, and that remains exposed to view in the finished areas of the building, including mechanical/electrical rooms and storage rooms. Consult with the General Trades Contractor to ensure that the prime coat shall be compatible with the finish coat.

F. Clean, remove rust from, and paint with zinc-chromate primer and aluminum-bronze paint, all steel hangers, boxes, straps, and rods, furnished

under this Contract, that are not provided with rust-protective finish or are damaged in installation, and that remain exposed to view or are in unfinished and mechanical spaces.

G. Paint exposed piping, valves, etc.

H. Refer to Section 09 91 00 for additional requirements.

## 3.08 CLEANING

A. Maintain all work areas in a neat and orderly manner, free of debris. Clean up all occupied travel areas at the end of each shift, or immediately after use for material removed.

B. Contractor shall do its own cleanup, shall move materials that are in the way of constructing its work, shall repair and replace any damage it does, and shall do any other work of a similar nature which must be done.

C. Equipment cleaning and touch-up:
   1. Use only cleaning materials recommended by Manufacturer of the surface to be cleaned.
   2. Clean interiors of all enclosures of dirt and debris before installing trim or covers.
   3. Brush-clean, prime, and paint-in-kind rust spots on any part.
   4. Clean galvanized piping in exposed areas with diluted acetic acid.
   5. Clean copper piping in exposed areas with fine emery cloth and solvent.
   6. Clean all gauges, strainers, and fittings.

D. Final cleaning:
   1. Repair, patch, and touch up all scratched or damaged surfaces to specified finish to match adjacent surfaces, before final acceptance of the work. Repair dents and marred finishes to the satisfaction of the Architect. Prepare for finish painting, where painting is specified.
   2. Thoroughly clean all fixtures, material, finished surfaces of equipment, painted, enameled, or varnished work, and all other exposed finished surfaces, removing all labels, stickers, marks, stains, fingerprints, spots, rust, oil, grease, dirt, dust, and other foreign materials, so that the Work is presented in a complete and finished condition, ready for acceptance and intended use.
   3. Employ experienced workers, or professional cleaners, for final cleaning.
   4. Verify that all drains are free of debris.
   5. Expedite the cleaning, washing, waxing, and polishing required within other Sections of these Specifications.

E. Refer to Section 01 74 19, “Construction Waste Management and Disposal,” for additional requirements.

## 3.09 TESTS AND INSPECTIONS

A. The Contract Documents, Laws, Ordinances, Rules, Regulations, or Orders of any Code Authority having Jurisdiction may require the Work to be inspected, tested, or approved.

B. Test and check all control valves, drain valves, gauges, alarm devices, and waterflow and supervisory switches for proper operation. Submit a written record of these tests to the Architect.

C. Arrange for inspection of the Work by the Code Authority having Jurisdiction. Inspections shall be conducted by the following:
   1. City of Whitehall Building Department.
   2. City of Whitehall Fire Department.

D. Notify the Construction Manager of all scheduled tests and adjustments at least (48) hours before they are scheduled, so that the Construction Manager may witness same. If the Contractor performs any test or adjustment without the Construction Manager present, or without proper notification, the Contractor shall perform the test or adjustment a second time, in the presence of the Construction Manager. Coordinate all test schedules with the Construction Manager to minimize inconvenience.

E. Concealed lines shall be tested and approved before being concealed. If a leak appears during the final test, repair the line and any damage resulting from the leak.

F. After Work has been completed, test each system as required by other Sections of this Specification. At the test pressures, the circulation shall be free and the piping shall be proven free of leaks.

G. Provide all required testing and obtain approvals. Secure required certificates of inspection, testing, or approval, and include them in the Operating and Maintenance manuals.

H. Contractor shall bear all costs of such inspections, tests, or approvals.

I. Should any of the Work be covered up or enclosed prior to completion of all required inspections and approvals, uncover the Work as required and, after it has been completely inspected and approved, make all repairs and replacements with such materials and workmanship as are necessary to secure the approval of the Architect, and at no additional cost to the Owner.

J. Furnish all test pumps, gauges, equipment, and personnel required, and test as necessary, to demonstrate the integrity of the finished installation to the approval of the Code Authority having Jurisdiction and the Architect.

K. Check each piece of equipment for defects and verify that all parts are properly furnished and installed, that all items function properly, and that all adjustments have been made.

# TITLES, ABBREVIATIONS, AND SYMBOLS

| | |
|---|---|
| & | And |
| @ | At |
| ∠ | Angle |
| Ø | Diameter |
| # | Number |
| Ø | Round OR Phase |
| A. | Compressed air |
| A.D. | Access door OR Area drain |
| A.F.D. | Acid floor drain |
| A.F.F. | Above finished floor |
| A.P. | Access panel |
| A.W.C.O. | Acid wall cleanout |
| AABC | Associated Air Balance Council |
| AB. | Above |
| ACI | American Concrete Institute |
| ACPA | American Concrete Pipe Association |
| ADA-AG | Americans with Disabilities Act — Accessibility Guidelines |
| ADC | Air Diffusion Council |
| AH | Air handler |
| ALT. | Alternate |
| ALUM. | Aluminum |
| AMCA | Air Movement and Control Association |
| amp | ampere |
| ANSI | American National Standards Institute |
| APPROX. | Approximately |
| ARCH. | Architect |
| ARI | Air-Conditioning & Refrigeration Institute |
| ARR'T. | Arrangement |
| ASA | Acoustical Society of America |
| ASHRAE | American Society of Heating, Refrigerating, and Air Conditioning Engineers |
| ASME | American Society of Mechanical Engineers |
| ASPE | American Society of Plumbing Engineers |
| ASSE | American Society of Sanitary Engineering |
| ASTM | American Society for Testing & Materials |
| AUTO. | Automatic |
| AV | Acid vent |
| AW | Acid waste |
| AWG | American wire gauge |
| AWS | American Welding Society |
| AWWA | American Water Works Association |
| B.D.D. | Backdraft damper |
| B.T. | Bathtub |
| B.V. | Backwater valve |
| BAL. | Balancing |
| BFP | Backflow preventer |
| BHP | Brake horsepower |
| BICSI | Building Industry Consulting Services International |
| BLDG. | Building |
| BSBD.RAD. | Baseboard radiation |
| BSMT. | Basement |
| BTM. | Bottom |
| BTU | British thermal unit |
| C.B. | Catch basin |
| C.I. | Cast iron |
| C.O. | Clean out |
| C/C | Center to center |
| C/L | Center line |
| CAB. | Cabinet |
| CAP. | Capacity |
| CEIL./CLG. | Ceiling |
| CFC | Chlorofluorocarbon |
| CFH | Cubic feet per hour |
| CFM | Cubic feet per minute |
| CFR | Code of Federal Regulations |
| CGA | Compressed Gas Association |
| CHEM. | Chemical |
| CISPI | Cast Iron Soil Pipe Institute |
| COL. | Column |
| COMB. | Combination |
| CONC. | Concrete |
| COND. | Condensate OR Condenser |
| CONN. | Connection OR Connect |
| CONST. | Construction |
| CONTR. | Contractor |
| CONV. | Convector OR Converter |
| COORD. | Coordinate |
| CSA | Canadian Standards Association |
| CSI | Construction Specifications Institute |
| CT | Current transformer |
| CU. FT. | Cubic feet |
| CU IN. | Cubic inch |
| CUH | Cabinet unit heater |
| D. | Deep |
| D.F. | Drinking fountain |
| D.L. | Door louver |
| D.M. | Damper motor |
| D.S. | Downspout |
| DB | Dry bulb |
| DBL. | Double |
| DCW | Domestic cold water |
| DET. | Detail |
| DHW | Domestic hot water |
| DHWR | Domestic hot water return |
| DIA. / Ø | Diameter |
| DIFF. | Diffuser |
| DIM. | Dimension |
| DISCH. | Discharge |
| DN. | Down |
| DOE | United States Department of Energy |
| DPR. | Damper |
| DR. | Door |
| DW | Distilled water |
| DWG. | Drawing |
| DWH | Domestic water heater |
| DWV | Drain, waste and vent |
| E.A.T. | Entering air temperature |
| E.C. | Electrical Contractor |
| E.S.P. | External static pressure |
| E.T. | Expansion tank |
| E.W.T. | Entering water temperature |
| EA. | Each |
| EFF. | Efficiency |
| EIA | Electronic Industries Alliance |
| ELEC. | Electric OR Electrical |
| ELEM. | Element |
| ELEV. | Elevation |
| ENGR. | Engineer |
| ENT. | Entering |
| EPA | Environmental Protection Agency |
| EQUIP. | Equipment |
| ETL | Electrical Testing Laboratories |
| EW | Eye wash |
| EWC | Electric water cooler |

| | |
|---|---|
| EXH. | Exhaust |
| EXIST. | Existing |
| EXT. | Exterior |
| F & T | Float and thermostatic |
| F. | Fan OR Fire |
| F.D. | Fire damper |
| F.E. | Fire extinguisher |
| F.E.C. | Fire extinguisher cabinet OR Food Service Equipment Contractor |
| F.H. | Fire hydrant |
| F.H.C. | Fire hose cabinet |
| F.H.E.C. | Fire hose/extinguisher cabinet |
| F.V. | Flush valve |
| FCC | Federal Communications Commission |
| FD | Floor drain |
| FDA | Food and Drug Administration |
| FHA | Federal Housing Administration |
| FIG. | Figure |
| FIN. | Finish |
| FIN.RAD. | Finned radiation |
| FLEX. | Flexible |
| FLR. / FL. | Floor |
| FMG | Factory Mutual Global |
| FOR | Fuel oil return |
| FOS | Fuel oil supply |
| FPC | Fire Protection Contractor |
| FPM | Feet per minute |
| FT. | Feet |
| FT.HD. | Feet of head |
| FURN. | Furnish(ed) |
| G | Gas |
| G.C. | General Contractor |
| G.I. | Grease interceptor |
| G.T.C. | General Trades Contractor |
| gal. | Gallon |
| GALV. | Galvanized |
| GEN. | General |
| GFI | Ground fault interrupter |
| GPM | Gallons per minute |
| GR | Grille |
| GRAV. | Gravity |
| H./HT. | Height |
| H.P. | High pressure |
| H.S. | Hair strainer |
| H'STAT | Humidistat |
| HAC | Heating and air conditioning |
| HB | Hose bibb |
| HCFC | Hydrochlorofluorocarbon |
| HHS | United States Department of Health and Human Services |
| HORIZ. | Horizontal |
| HP | Horsepower |
| HPC | High pressure steam condensate |
| HPS | High pressure steam |
| hr. | Hour |
| HTG. | Heating |
| HTR. | Heater |
| HUD | United States Department of Housing and Urban Development |
| HV | Heating and ventilating OR High velocity |
| HVAC | Heating, ventilating, and air conditioning |
| I.D. | Inside diameter |
| IAQ | Indoor air quality |
| ICC | International Code Council |
| ICEA | Insulated Cable Engineers Association, Inc. |
| IDF | Intermediate distribution frame |
| IEC | International Electrotechnical Commission |
| IEEE | Institute of Electrical and Electronics Engineers, Inc. |
| IESNA | Illuminating Engineering Society of North America |
| IN. | Inside OR Inches |
| IND. | Indirect |
| IND. U. | Induction unit |
| INSUL. | Insulation |
| INT. | Interior |
| INV. | Invert |
| INV. ELEV. | Invert elevation |
| IPS | Iron pipe size |
| IRI | Industrial Risk Insurers |
| ISO | International Organization for Standardization |
| J.R. | Janitor's receptor |
| JCAH | Joint Commission for Accreditation of Hospitals |
| kVA | Kilo volt-ampere |
| L. | Length |
| L.A.T. | Leaving air temperature |
| L.W.T. | Leaving water temperature |
| LAB | Laboratory |
| LAV | Lavatory |
| lb. | pound |
| LEED | Leadership in Energy and Environmental Design |
| LH | Left hand |
| LP | Liquefied petroleum |
| LPC | Low pressure steam condensate |
| LPS | Low pressure steam |
| LV'G. | Leaving |
| M.A. | Mixed air |
| M.O. | Motor operated |
| MAN. DPR. | Manual damper |
| MAT. | Material |
| MAX. | Maximum |
| MBH | 1,000 British thermal units/hour |
| MECH. | Mechanical |
| MET./MTL. | Metal |
| MEZZ. | Mezzanine |
| MFR. | Manufacturer |
| MH | Manhole |
| MIN. | Minimum |
| MISC. | Miscellaneous |
| MPS | Medium pressure steam |
| MS | Motor starter |
| MSS | Manufacturers Standardization Society of the Valve and Fittings Industry Inc. |
| MTD./MT. | Mounted OR Mount |
| N.I.C. | Not in contract |
| N.T.S. | Not to scale |
| N2 | Nitrogen |
| N2O | Nitrous oxide |
| NADCA | National Air Duct Cleaners Association |
| NAECA | National Appliance Energy Conservation Act |
| NB | National Board of Boiler and Pressure Vessel Inspectors |
| NCPI | National Clay Pipe Institute |
| NEBB | National Environmental Balancing Bureau |
| NEC | National Electrical Code |
| NEMA | National Electrical Manufacturers Association |
| NESHAPs | National Emissions Standards for Hazardous Air Pollutants |
| NFPA | National Fire Protection Association |
| NIOSH | National Institute for Occupational Safety and Health |
| NIST | National Institute of Standards and Technology |
| NO. OR # | Number |
| NOM. | Nominal |

| | |
|---|---|
| NP | Not permitted |
| NPT | National Pipe Thread Tapered |
| NSF | National Sanitation Foundation |
| NSPE | National Society of Professional Engineers |
| O. | Oxygen |
| O.A. | Outside air |
| O.D. | Outside diameter |
| O.I. | Oil interceptor |
| O.V. | Outlet velocity |
| O/C | On center |
| OAC | Ohio Administrative Code |
| ODH | Ohio Department of Health |
| ODMH | Ohio Department of Mental Health |
| ODMR/DD | Ohio Department of Mental Retardation and Developmental Disabilities |
| ODOE | Ohio Department of Energy |
| ODOT | Ohio Department of Transportation |
| ODRC | Ohio Department of Rehabilitation and Correction |
| ODYS | Ohio Department of Youth Services |
| OPG. | Opening |
| OPP. | Opposite |
| ORC | Ohio Revised Code |
| OSHA | Occupational Safety and Health Administration |
| OU./OZ. | Ounce |
| P.D. | Pressure drop |
| P.I.V. | Post indicator valve |
| P/L | Property line |
| PDI | Plumbing & Drainage Institute |
| PEI | Petroleum Equipment Institute |
| PLBG. | Plumbing |
| PNEU. | Pneumatic |
| PRESS. | Pressure |
| PROP. | Propeller |
| PRV | Pressure-reducing valve |
| PSF | Pounds per square foot |
| PSI | Pound-force per square inch |
| PSIG | Pound-force per square inch gauge |
| PT | Plaster trap OR Potential transformer |
| PVC | Polyvinyl chloride |
| R | Register |
| R.A. | Return air |
| R.D. | Roof drain |
| R/W | Right of way |
| RAD. | Radius OR Radiation OR Radiator |
| RECIRC. | Recirculating |
| REG. | Register |
| REINF. | Reinforced |
| REL. | Relief |
| REQ'D. | Required |
| RH | Right hand |
| RHC | Reheat coil |
| RM. | Room |
| RPM | Revolutions per minute |
| RTA/C | Rooftop air-conditioning unit |
| RW | Raw water |
| RWC | Rainwater conductor |
| S | Sink |
| S & R | Supply and return |
| S. DPR. | Smoke damper |
| S.A. | Shock absorber OR Supply air |
| S.F. | Square feet |
| S.M., S/M | Sheet metal |
| S.P. | Static pressure |
| S.S. | Service sink OR Storm sewer |
| S.S., S/S | Stainless steel |
| SAN. | Sanitary sewer |
| SB | Shampoo bowl |
| SD | Shower drain OR Smoke detector |
| SECT. | Section |
| SHR. | Shower |
| SHT. | Sheet |
| SHT. MT'L. | Sheet metal |
| SMACNA | Sheet Metal and Air Conditioning Contractors National Association |
| SPEC. | Specification |
| SQ. | Square |
| SQ. FT. | Square feet |
| SQ. IN. | Square inch |
| ST | Sound trap |
| STAT | Thermostat |
| STD. | Standard |
| STL. | Steel |
| STM. | Storm |
| SUCT./S | Suction |
| SW | Softened water |
| SW. | Switch |
| T.W. | Tempered water |
| T'STAT | Thermostat |
| TD | Temperature difference |
| TEMP. | Temperature |
| THERM. | Thermometer OR Thermostat |
| TIA | Telecommunications Industry Association |
| TYP. | Typical |
| UC | Undercut |
| UH | Unit heater |
| UL | Underwriters Laboratories, Inc. |
| UR | Urinal |
| USGBC | United States Green Building Council |
| UV | Unit ventilator |
| V. | Vent |
| V.T.R. | Vent through roof |
| VAC. | Vacuum |
| VC | Vacuum cleaning |
| VCP | Vitrified clay pipe |
| VERT. | Vertical |
| VIB. ISO. | Vibration isolator |
| VOC | Volatile organic compound |
| VSP | Vitrified sewer pipe |
| W. | Width OR Water |
| W.G. | Water gauge |
| W/ | With |
| W/O | Without |
| W/W | Wall to wall |
| WAT. | Water |
| WB | Wet bulb |
| WC | Water closet OR Water column |
| WH | Wall hydrant OR Water heater |
| WO | Waste oil |
| WOG | Water/oil/gas |
| XFMR | Transformer |
| YD. | Yard |
| YH | Yard hydrant |

END OF SECTION 21 05 00

# SECTION 21 05 06

# FIRE-SUPPRESSION SUBMITTALS

## PART 1 GENERAL

### 1.01 DESCRIPTION

A. Submittal dates:
   1. Within (14) calendar days after Award of Contract, submit complete materials list of all items proposed to be provided on this Project.
   2. Submit shop drawings within (28) days after Award of Contract.

B. Materials and equipment installed under the Fire Suppression Contract shall meet all the requirements of the Contract Documents. Do not order or install materials or equipment until submittals are reviewed and approved by the Engineer.

C. Refer to the list at the end of this Section and to the Sections listed in Section 21 05 00, "Common Work Results for Fire Suppression," Paragraph 1.01, for the items that the Contractor shall submit.

D. Submit complete copies of the catalog data or shop drawings for each manufactured item of equipment and all components to be used in the Work, including the following:
   1. Brand name.
   2. Catalog number.
   3. Specific performance data.
   4. Material description.
   5. Ratings.
   6. Capacity.
   7. Working pressure.
   8. Dimensional data.
   9. Material gauge or thickness.
   10. Wiring diagrams.
   11. General type.

E. Manufacturer's Catalog Sheets, Brochures, Diagrams, Schedules, Performance Charts, Illustrations, and Other Standard Descriptive Product Data: Contractor shall:
   1. Clearly mark or highlight each copy to identify pertinent materials, products, or models.
   2. Show dimensions and clearances required.
   3. Show performance and characteristics and capacities.
   4. Show wiring diagrams and controls.

F. Catalog data for equipment reviewed by the Engineer shall not take precedence over the requirements of the Contract Documents. Review by the Engineer shall not relieve the Contractor from the responsibility for

deviations from Drawings or Specifications, nor from the responsibility for providing proper clearance and coordination with other Contractors.

G. When submitted for review, all shop drawings shall bear the Contractor's signed certification of the following:
   1. Contractor has reviewed, checked, and approved the shop drawings.
   2. Shop drawings have been coordinated with the requirements of the Project and with the provisions of the Contract Documents.
   3. Contractor has verified all field measurements, hands of equipment, and construction criteria, materials, catalog numbers, and similar data.

H. The Engineer's review is **ONLY** for conformance with the design concept of the Project and with the Contract Documents. Contractor shall be solely responsible for construction means, methods, techniques, sequences, procedures, and safety precautions and programs in connection with the Work.

## 1.02 SHOP DRAWINGS

A. Indicate arrangement of component parts, physical dimensions, materials, electrical and mechanical service requirements, colors (where required), controls, accessories, capacities, and performance characteristics.

B. Prior to submitting shop drawings, the Contractor shall stamp and sign its certification that the equipment shown on the submittals meets all the requirements of the Contract Documents. **UNSIGNED COPIES WILL NOT BE REVIEWED.**

C. Submit (8) copies, unless otherwise noted. Approved shop drawings shall be distributed as follows:

| QUANTITY | TO |
|---|---|
| 2 | Architect |
| 1 | Engineer |
| 1 | Construction Manager |
| 1 | Contractor |
| 3 | Operating and Maintenance Manuals |

   1. **NOTE:** At the Contractor's option, shop drawings may be submitted electronically in Portable Document Format (PDF). Contractor shall be responsible for making all copies for distribution and file.

## 1.03 CONTRACTOR RESPONSIBILITIES

A. Completely review Shop Drawings, product data, and samples prior to submission.

B. Determine and verify the following:
   1. Field measurements.
   2. Field construction criteria.
   3. Catalog numbers and similar data.
   4. Conformance with Specifications.
   5. Hand of equipment.

6. Quantities and sizes.

C. Coordinate each submittal with requirements of the Work and the Contract Documents.

D. Notify the Engineer, in writing, at time of submission, of any deviations in the submittals from the requirements of the Contract Documents.

E. Contractor shall make submittals promptly in accordance with the approved schedule, and in such sequence as to cause no delay either in its Work or in the work of any other Contractor.

F. Immediately make any corrections or changes in rejected submittals as required by the Engineer and resubmit until accepted.

G. If the Contractor orders equipment or materials, or begins installation, fabrication, or work prior to return of approved submittals, it shall be "at the Contractor's own risk."

H. When (2) or more items of the same material or equipment are required, they shall be of the same Manufacturer.

I. Incorporate Shop Drawings into the Operating and Maintenance Manuals.

## 1.04 CERTIFICATIONS

A. Provide:
1. Test Agency results verifying capacities, operating conditions, and power requirements at design conditions.
2. Manufacturer's statement of compliance with Standards discussed in individual Specification Sections.
3. Equipment labels indicating Certification requirements.
4. Quality standard designations on each unit piece, e.g., each pipe length, pressure vessel, or valve.
5. Typed verification that noted mixes, chemical compositions, and testing procedures were complied with.
6. Other Certifications listed in other Sections of the Specifications.

## 1.05 REQUIRED SUBMITTAL INFORMATION

A. The items listed below may not be a complete list of required submittals. Submit for approval all items to be provided, whether listed or not.

**KEY FOR REQUIRED SUBMITTALS**

A Catalog Cuts/Shop Drawings (8 copies).
B Operating and Maintenance Manuals (3 copies).
C Color samples (3 each).
D Product samples (2 each).
E Typed statement of material to be furnished.
F Typed verification of compliance with certification requirements.
G Test.

H Coordination Drawings.

(Submit number of copies indicated. If not indicated, submit full quantity of copies previously listed.)

| **FIRE SUPPRESSION SUBMITTALS REQUIRED** | **KEY** |
|---|---|
| Valves | A |
| Hangers | A |
| Pipe-Coding Materials | D-2 |
| Pipe | E-4 |
| Pipe Fittings | E-4 |
| Pressure Gauges | A |
| Sprinklers | A |
| Suppliers and Manufacturers List | E-4 |
| Fire Suppression / Sprinkler Layout Drawings | A-2 |
| Hydraulic Calculations | A-2 |
| Contractor's Material and Test Certificate | F-1 |
| Certificate of Fire Protection Approval from City of Whitehall Building Department | F-1 |
| Operating and Maintenance Manuals (Refer to Section 21 05 07) | B-3 |

END OF SECTION 21 05 06

# SECTION 21 05 07

# FIRE-SUPPRESSION OPERATING AND MAINTENANCE MANUALS

## PART 1 GENERAL

### 1.01 RELATED DOCUMENTS

A. Section 01 77 00, “Closeout Procedures.”

B. Section 01 78 39, “Project Record Submittals.”

C. Section 21 05 60, “Requirements for Completion of Fire-Suppression Work.”

### 1.02 DESCRIPTION

A. Compile Operating and Maintenance Manual upon completion of the Work, and as required for final acceptance. Submit draft of Operating and Maintenance Manual to the Engineer for review and approval (90) days before Contract Completion.

B. Submit final corrected Operating and Maintenance Manual (7) days before Contract Completion.

C. Upon approval, provide (3) Operating and Maintenance Manuals.

## PART 2 PRODUCTS

### 2.01 OPERATING AND MAINTENANCE MANUALS

A. The following items, together with any other pertinent data, shall be included in each Operating and Maintenance Manual. This list is not necessarily complete and shall be used only as a guide. Format of manual to be as follows:

1. Operating and Maintenance Manuals shall be loose-leaf, 3-ring, hardcover binders, no larger than 11 in. wide x 12 in. high. Material shall be typewritten or printed, and be fully legible. Each section shall be divided by labeled tabs.
2. Cover:
   a. Title of Project.
   b. Date of Project completion.
   c. Name and address of the Owner.
   d. Name and address of the Construction Manager.
   e. Date of submittal.
   f. Name and address of the Contractor.
   g. Name and address of the Architect.
   h. Name and address of the Engineer.
3. Second Page: Index.
4. First Section: A copy of each shop drawing and approval submittal with an index at the beginning of the section.

5. Second Section:
   a. A list of all equipment used on the job.
   b. Parts list with numbers of replaceable items, including sources of supply.
   c. Manufacturers' and nearest Factory Representatives' names and addresses.
   d. Model and Serial numbers of components of systems installed.
   e. Routine and 24-hour emergency service/repair information:
      1) Name, address, and telephone number of servicing agency.
      2) Names of personnel to be contacted for service arrangements.
6. Third Section:
   a. Description of systems.
   b. Manufacturer's literature describing each piece of equipment, including the following:
      1) Operating and maintenance instructions.
      2) Lubrication instructions.
      3) Start-up and shutdown procedures.
      4) Routine and emergency servicing instructions.
   c. Valve charts.
   d. Special wrenches, keys, etc.
   e. Copies of all testing reports.
   f. Prints of all system wiring and control diagrams.
   g. All certifications and related information.
   h. Copies of all written warranties.
   i. The Owner's receipt of spare parts. Refer to Section 21 05 60.
   j. Copy of the signed and dated letter from the Owner, stating satisfactory completion of instruction, listing names of personnel instructed, and listing names of persons giving the instruction.

B. Refer to Section 01 77 00 and Section 01 78 39 for additional requirements.

## PART 3 EXECUTION

### 3.01 CONTROL DIAGRAM

A. Mount approved copy in a neat frame with backing under glass, or within a plastic jacket, in the Mechanical Room or other area designated by the Architect or Construction Manager.

END OF SECTION 21 05 07

# SECTION 21 05 15

# FIRE-SUPPRESSION SLEEVES

## PART 1 GENERAL

### 1.01 RELATED DOCUMENTS

A. Section 01 73 29, “Cutting and Patching.”

B. Section 07 92 00, “Joint Sealants.”

C. Section 21 05 00, “Common Work Results for Fire Suppression.”

### 1.02 DESCRIPTION

A. Sleeve where piping passes exposed through walls, and where any piping passes through smoke-rated or fire-rated separations, equipment room walls, or above-grade floors.

B. Indicated sizes and locations are based on early Project information and should be verified by the Contractor.

C. Chases and constructed openings that are not indicated on the Drawings shall be provided at the expense of the Contractor requiring the constructed chase or opening.

D. Later, if it becomes necessary to cut into the work because of the failure of the Contractor to notify the General Trades Contractor, then the General Trades Contractor shall do any cutting and patching required later, at the Contractor’s expense.

E. Provide dimensions and locations of openings required in walls for sleeves, piping, and similar items, and deliver sleeves, to the General Trades Contractor, so as not to delay construction.

F. **BEFORE CONSTRUCTION OF MASONRY OR CONCRETE WALLS IS STARTED**, give the General Trades Contractor locations and sizes of all openings required for the installation of equipment or sleeves.

G. If sleeves are not installed due to the fault of the Contractor, holes through masonry or concrete construction shall be core drilled by the General Trades Contractor, at the expense of the Contractor.

H. In Drywall, Masonry, or Concrete Wall Construction:
   1. Provide sleeves for piping.
   2. Option for above ceiling only: General Trades Contractor shall omit block(s) where required for penetrations, and shall provide square-finished opening. Do not omit blocks in sound barrier walls, under bearing points, or in fire-rated or smoke-rated walls.
   3. Coordinate with the Architect, Structural Engineer, and General Trades Contractor.

I. Verify which walls, ceilings, or floors are fire-rated, if any, and provide approved fire-blocking or fire-protective devices as required.

J. Carefully coordinate and check locations of sleeves immediately before and after each concrete pour and masonry installation.

K. Sleeves are not required in core-drilled openings not requiring water-proofing or firestopping.
   1. **Exception:** Sleeves are required at core drilling through hollow core pre-cast slabs and through concrete block walls, to facilitate containment of required firestopping material.

L. Sleeving with absolutely watertight seal is required for piping passing through exterior walls above grade, and underground foundation walls and other below-grade penetrations into building.

M. Provide sleeves for openings in new walls.

## 1.03 QUALITY ASSURANCE

A. Standards:
   1. Factory Mutual Global (FMG).
   2. Underwriters Laboratories, Inc. (UL).

# PART 2 PRODUCTS

## 2.01 STANDARD SLEEVES

A. Piping Sleeve Material:
   1. Up to 8 in. diameter: Machine-cut Schedule 40 black steel pipe.
   2. Bare copper piping: Copper sleeves.
   3. **(Option)** In non-fire-rated walls: Schedule 40 plastic pipe may be used for piping sleeves, where adjacent ceiling space is used for return air plenum. Refer to Drawings.

B. Sizing: Sleeves shall be large enough for watertight or fire-rated sleeve seals to be installed. Size to allow 1/2 in. minimum clearance all around.

## 2.02 WATERTIGHT SLEEVE SEALS

A. Oakum Caulking: Thiokol Corp. With lead-pour or elastomeric sealant. Elastomeric sealant shall be 2-component, polysulfide or polyurethane.
   1. Other Acceptable Manufacturers: Approved equal by 3M, Calpico, or Hilti.

B. **(Option)** Compression Seals: Thunderline Corp. Linkseal. Stainless steel bolts and nuts. Provide correct size seal, and coordinate with sleeve size.
   1. Other Acceptable Manufacturers: Approved equal by Wayne, Michigan, or Calpico.

C. Provide sleeves with waterstop anchor flange at midpoint where penetrating structure at or below grade.
   1. Acceptable Manufacturers: Calpico, 3M, or Hilti.

## 2.03 FIRE-RATED SLEEVE SEALS

A. ASTM E119 and E814 Silicone RTV foam, UL-approved.

B. Acceptable Manufacturers: Dow Corning 3-6548, Chase Foam, 3M Fire Barrier caulking or putty, IPC Flamesafe, Carborundum Fibersil, Nelson Fire Stop, BP Fyre Putty, Johns-Manville Cerafiber, KBS Mortar Seal, Hilti Fire Stop, International Protective Coatings Corporation "Flame-Safe," or CSD Sealing Systems "FSP."

# PART 3 EXECUTION

## 3.01 COORDINATION

A. Coordinate location of sleeves, core drilled holes, and other holes required with the General Trades Contractor, Structural Engineer, equipment, and other Trades.

## 3.02 CUTTING

A. Cut off sleeves through walls flush with each surface.

B. Cut off sleeves 1/8 in. above finished floors and 3 in. above floors in kitchens, utility rooms, equipment rooms, and shafts. Bottom of sleeve shall be cut off flush with surface.

C. Refer to Section 01 73 29 for specific requirements regarding approved cutting methods.

## 3.03 INSTALLATION

A. Piping shall not bear on sleeves. Sleeves shall be installed plumb and true to line, grade, and position.

B. All piping sleeves and escutcheons shall have ample clearance for the pipe, and shall have chrome-plated wall and floor escutcheons over the pipe in finished areas. Provide chrome-plated or prime-coated escutcheons in other rooms.

C. Fire Blocking of Penetrations of Fire-Rated Construction:
   1. Use approved, UL-listed, fire-retardant sealants, backing, and packing as required to maintain fire rating of the structure penetrated.
   2. Spray UL-listed foam sealant around exposed piping entering and leaving fire-rated wall or floor structures.
   3. To ensure fire blocking, close space around piping passing through walls and floors. Seal space up to a 1/2 in. gap with sealant or caulking. Close off space greater than a 1/2 in. gap with sheet metal and seal airtight.
   4. For larger openings, provide UL-listed, FMG-approved KBS sealbags as manufactured by International Protective Coatings Corporation.
   5. Pack all fire-rated or sound-rated separation sleeves with glass fiber, high-temperature mineral wool, aluminum-silica fiber, fire-retardant

rope, calcium silicate, or other noncombustible material to maintain fire rating of structure, and finish with fire-rated sleeve seals.

6. Fill space around all sleeves extending into exposed areas with material compatible with adjacent construction and finish.
7. All openings shall have been UL-tested utilizing the proper rated penetrations to be equal to, or greater than, the barrier assembly in which the penetration occurs.
8. Install all penetrations and openings in accordance with the Manufacturers' instructions.
9. The fire-blocking assembly shall maintain the required fire-resistance rating of the wall or floor in which it is placed, and a further sealant shall be applied, if necessary, to attain a smoke-tight condition. Openings without sleeves shall be closed in the same manner.
10. Refer to Section 07 92 00 for additional requirements.

D. Watertight Seals:
1. Piping sleeves penetrating outside wall or slabs on grade shall have welded intermediate flange imbedded in masonry. Space around piping shall be clamped, packed, and caulked with lead and oakum to make an absolutely watertight seal within sleeve. Caulk around outside of sleeve.
2. **Option:** Install compression seals.

E. Unused sleeves shall be plugged, fire-packed, and finished to match adjacent surface.

END OF SECTION 21 05 15

# SECTION 21 05 23

# GENERAL-DUTY VALVES FOR WATER-BASED FIRE-SUPPRESSION PIPING

## PART 1 GENERAL

### 1.01 RELATED DOCUMENTS

A. Section 21 05 53, "Identification for Fire-Suppression Piping and Equipment."

B. Section 21 10 00, "Water-Based Fire Suppression Systems."

### 1.02 DESCRIPTION

A. Provide valves:
   1. As required by NFPA 13.
   2. As required to facilitate the maintenance, operation, isolation, and servicing of all sprinkler piping systems.
   3. In locations accessible to qualified personnel for operation, removal, maintenance, or servicing.
   4. As indicated on the Drawings and as discussed in other Sections of these Specifications.

B. Coordinate valves with structure, and mechanical and electrical equipment.

### 1.03 QUALITY ASSURANCE

A. **ALL** valves listed below shall conform to the following Standards:
   1. Listed and labeled by Underwriters Laboratories, Inc. (UL).
   2. Approved by Factory Mutual Global (FMG).
   3. National Fire Protection Association (NFPA): 2007 NFPA 13, "Standard for the Installation of Sprinkler Systems."
   4. American National Standards Institute (ANSI).
   5. American Society of Mechanical Engineers (ASME).
   6. American Society of Sanitary Engineers (ASSE).
   7. American Water Works Association (AWWA).
   8. Food and Drug Administration (FDA).
   9. Manufacturers Standardization Society of the Valve and Fittings Industry (MSS).

## PART 2 PRODUCTS

### 2.01 MANUFACTURERS AND MODEL NUMBERS

A. Manufacturer and Model Number listed below shall be considered to be the Design Base Manufacturer and Model Number. Other Acceptable Manufacturers will be permitted, unless specifically excluded.

B. All valves of the same type used on the Project shall be by the same Manufacturer.

## 2.02 BALL VALVES (BRONZE BODY, UP TO 2 IN.)

A. 1/4 in. to 1 in. (full port): Nibco Model KT-585-70-UL. MSS SP 110-conforming, 175 lb. WWP, threaded 2-piece, chrome-plated ball, blow-out-proof stem, and reinforced TFE seats.

B. 1-1/4 in. to 2 in. (standard port): Nibco Model KT-580-70-UL. MSS SP 110-conforming, 175 lb. WWP, threaded 2-piece, chrome-plated ball, blow-out-proof stem, and reinforced TFE seats.

C. Other Acceptable Manufacturers: Approved equal by Kennedy Valve Division of McWane, Inc., Hammond, Crane, Milwaukee, Watts, Reliable Automatic Sprinkler Co., Tyco Fire Products, Automatic Sprinkler, Mueller, Powell, Victaulic, American-Darling, or United Brass Works.

D. Install supervisory switches.

## 2.03 DRAIN VALVES

A. Milwaukee BA-100H or BA150H. 3/4 in. bronze hose-end ball valve, with cap and chain (where concealed).

B. Other Acceptable Manufacturers: Approved equal by Walworth or Nibco.

# PART 3 EXECUTION

## 3.01 COORDINATION

A. Coordinate with Local Fire Department regarding the exact location of valves, siamese connections, etc., and the proper number, size, and type threads required.

B. Coordinate all access panel locations, if required, with the General Trades Contractor.

## 3.02 INSTALLATION

A. Install valves with handwheel at or above centerline of pipe.

B. Install valves at service connections to equipment, or branch lines at mains, at low points for draining.

C. To facilitate replacement of devices, install isolation valves upstream of pressure alarm switch, automatic drain device, and flow control valves.

D. Open up valves fully before soldering to piping.

E. During soldering or brazing, remove valve internals and protect the remaining element of sweat end valves against heat damage.

F. Tag all valves as required in Section 21 05 53.

## 3.03 TESTS

A. Test all valves for tightness.

B. Test-operate all valves at least once from closed-to-open-to-closed positions while valve is under pressure.

END OF SECTION 21 05 23

# SECTION 21 05 29

# HANGERS AND SUPPORTS FOR FIRE-SUPPRESSION PIPING AND EQUIPMENT

## PART 1 GENERAL

### 1.01 DESCRIPTION

A. Provide all structural supports between building structural framing members to support major fire-suppression equipment, including fire pumps, etc.

B. Attach all items of piping and equipment securely to structure or floor.

C. Provide support steel, attached to building structure, as necessary, to support piping and smaller fire-suppression items. Provide supports between structural members, such as steel angles, channels, unistrut, etc., as required, except where specifically called out to be provided by the General Trades Contractor. Obtain prior written approval of the Architect.

D. Refer to Structural and Architectural Drawings and Specifications to determine what supports are provided by the General Trades Contractor.

E. For any variation in supports needed for equipment actually purchased, Contractor shall bear all costs of modifications, including redesign costs.

F. Provide angles, clips, mechanical fasteners, reinforcement steel, drilling of structure, welding to structure, etc. as needed. Means of attachment shall be approved by the Architect and shall not degrade the structure.

G. Provide hangers and supports, in compliance with the requirements of NFPA 13, as required for piping and equipment installed under the Fire Suppression Contract.

H. Provide all necessary inserts, expansion shields, beam clamps, pipe floor supports, and auxiliary steel.

### 1.02 QUALITY ASSURANCE

A. Standards:
   1. National Fire Protection Association (NFPA): 2007 NFPA 13, “Standard for the Installation of Sprinkler Systems.”
   2. American National Standards Institute (ANSI), including ANSI B31.1, “Code for Power Piping.”
   3. American Society for Testing and Materials (ASTM).
   4. American Society of Mechanical Engineers (ASME), including ASME B31.9, “Building Services Piping.”
   5. Factory Mutual Global (FMG).
   6. Manufacturers Standardization Society of the Valve and Fittings Industry (MSS).
   7. Underwriters Laboratories, Inc. (UL).

B. All piping supports, parts, and installation shall conform to the latest requirements of NFPA 13, ANSI B31.1 and MSS Standard Practice SP-58, SP-69, and SP-89, and not exceed the maximum pipe deflections allowed by ASME B31.9, except as supplemented or modified by the requirements of this Specification.

C. Components shall be selected and matched to the load imposed on them.

## PART 2 PRODUCTS

### 2.01 PIPING HANGERS

A. Uninsulated Piping:
   1. Steel, cast iron, or plastic; 1/2 in. to 8 in.: Anvil Fig. 69. Galvanized carbon steel, adjustable swivel ring.
   2. Copper, 1/2 in. to 4 in.: Anvil Fig. CT-99. Copper-plated hangers, adjustable tubing ring, carbon steel ring, and malleable iron adjusting nut.

B. Acceptable Manufacturers: Anvil International, Inc., B-Line Systems, Inc., Carpenter & Patterson, Inc., Globe Pipe Hanger Products, Inc., Erico/Michigan Hanger Co., Inc., National Pipe Hanger Corp., or PHD Manufacturing, Inc.

### 2.02 TRAPEZE HANGERS

A. Unistrut P1000 or Superstrut A1200. Angle iron, or channel of sufficient length to support pipes and insulation on individual hangers, roller supports or saddles with insulation protectors, support capacity, support spacing, trapeze hanger rod diameter, and quantity as required to support total piping load.

B. Design support system and obtain approval of a Structural Engineer licensed in Ohio. Submit details to the Architect for approval.

C. Acceptable Manufacturers: B-Line Systems, Inc., GS Metals Corp., Erico/Michigan Hanger Co., Inc., National Pipe Hanger Corp., Unistrut Corp., Wesanco, Inc., or Powerstrut.

### 2.03 PIPE HANGER RODS, CLAMPS, AND BRACKETS

A. Pipe hanger rods shall be solid steel, threaded ends or all-thread rods of diameter listed below, with double nut attachment to the hanger and at the hanger attachment. Sizes are as follows:

| PIPE SIZES | ROD DIAMETER |
|---|---|
| Up to 2 in. | 3/8 in. |

B. Beam Clamps (up to 8 in. diameter pipe):
   1. Anvil Fig. 227. Top beam clamp, steel jaw, hook rod with nut, and spring washer steel eye-bolt, with Anvil Fig. 157 for appropriate rod diameter.

2. **Option:** Anvil Fig. 86. Malleable iron clamp, hardened steel cup point set screw with Fig. 89 steel retaining clip. **C-CLAMPS WITHOUT RETAINING CLIPS ARE EXPRESSLY PROHIBITED.**

C. Wall Brackets: Carbon steel, back plates, and bolts.
1. Anvil Fig. 194. Lightweight 750 lb. load.
2. Anvil Fig. 195. Medium-weight 1,500 lb. load.
3. **Option:** Unistrut Superstrut A1200.

D. Acceptable Manufacturers: Anvil International, Inc., B-Line Systems, Inc., Carpenter & Patterson, Inc., Globe Pipe Hanger Products, Inc., Erico/Michigan Hanger Co., Inc., National Pipe Hanger Corp., or PHD Manufacturing, Inc.

## 2.04 STRUCTURAL STEEL

A. Provide ASTM A36 / ASTM A36M, black and galvanized, steel plates, shapes, and bars, steel beams, unistrut, standard-weight black steel pipe, or steel angle of adequate size and strength to safely carry the weight of equipment item.

## 2.05 FINISH

A. Unless otherwise noted, all steel hangers and supports shall be standard black.

# PART 3 EXECUTION

## 3.01 INSTALLATION — PIPING HANGERS AND SUPPORTS

A. Install all necessary pipe hangers, supports, clamps, wall brackets, and attachments as required:
1. To properly support piping from building structure.
2. To allow controlled thermal movement of piping systems.
3. To facilitate action of expansion joints, loops, and bends, where used.
4. To provide slope where indicated.

B. Install all piping systems with adequate provisions made for expansion and to prevent stresses on valves and equipment. Provide adequate pipe anchors, guides, and supports from building structure as required to properly control pipe movement. Method shall suit job conditions.

C. Install hangers and supports with all necessary inserts, bolts, rods, nuts, washers, and other accessories, according to Manufacturer's recommendations. Hangers shall be double-nutted.

D. **DO NOT USE POWDER-ACTUATED ANCHORS OR FASTENERS.**

E. **DO NOT USE C-CLAMPS WITHOUT RETAINING CLIPS.**

F. Use a separate hanger for each pipe. Do not hang one pipe from another.

G. Provide additional supports as necessary to maintain piping alignment.

H. Securely support all piping from structure with all necessary hangers, rods, brackets, and accessories of approved type and size per NFPA 13.

I. Securely fasten pipe and hang with NFPA-approved hangers spaced not less than 12 in. or more than 18 in. from a sprinkler. (1) hanger is required on each length of pipe and on cross mains between each branch line.

J. Locate and space piping supports according to NFPA requirements. Maximum spacing of piping supports shall be as follows:

| STEEL PIPE SIZE | THREADED LIGHT WALL | STANDARD WEIGHT |
|---|---|---|
| 1 in. to 3 in. | 12 ft. | _____ |

**Exception:** Locate hangers on exposed horizontal piping, mounted at less than 12 ft. above floor, at 8 ft. on center.

K. All hangers shall support (5) times the total load of the water-filled pipe in addition to a minimum of 250 lb. load applied at the hanger per NFPA 13.

L. Support piping at equipment from floor, structure, or walls, so that piping weight is not supported by equipment.

M. Support piping near elbows, such that the total cantilevered length for both sides of the elbow does not exceed 3 ft.

N. Provide proper angles or channels between structural members for hanger supports where necessary. Weld to steel structural members. Consult with the Architect regarding this procedure.

O. Trapeze Hangers:
   1. At the Contractor's option, trapeze hangers may be used where parallel runs of pipe occur.
   2. All rods on trapeze hangers shall be 1/2 in. minimum.
   3. Clamp each pipe individually.
   4. Provide individual piping attachment to each Unistrut hanger, angle, or channel.

P. Support vertical risers at the floor with friction riser pipe clamps.

Q. Do not support hangers from roof deck. Span from structural members with supplementary steel where direct attachment to structural members is not practical.

R. Ceilings:
   1. Do not support fire suppression lines, or any other utility lines, from ceiling and ceiling grid systems.
   2. Piping, and each ceiling and ceiling grid system, shall be a separate installation. Independently support each from the building structure.
   3. Where interferences occur, in order to support piping, install trapeze-type hangers or supports. Locate them where they do not interfere with access to fire-suppression equipment items.

S. Use top flange beam clamps to avoid burning metal deck.

T. Painting:
   1. Touch-up:
      a. Clean field welds, bolted connections, and abraded areas of all shop paint.
      b. Paint exposed areas immediately after erecting hangers and supports.
      c. Use same paint materials as used for shop painting.
      d. Apply paint by brush or spray to provide a minimum dry film thickness of 2.0 mils.
   2. Galvanized surfaces: Clean and apply galvanizing repair paint to comply with ASTM A780.

END OF SECTION 21 05 29

# SECTION 21 05 53

# IDENTIFICATION FOR FIRE-SUPPRESSION PIPING AND EQUIPMENT

## PART 1 GENERAL

### 1.01 DESCRIPTION

A. Identify by labels and tags the following items:
   1. Piping exposed in equipment rooms, accessible service areas, or accessible chases; piping running above accessible ceiling construction.
   2. All fire-suppression valves:

### 1.02 QUALITY ASSURANCE

A. Standards:
   1. American Society of Mechanical Engineers (ASME) A13.1.
   2. Occupational Safety and Health Administration (OSHA).

### 1.03 ACCEPTABLE MANUFACTURERS

A. Seton “Setmark” or approved equal by Brady, MSI, Calpico, or Sun-Line.

B. Valve Tags: Seton, Brady, MSI, Calpico, Sun-Line.

## PART 2 PRODUCTS

### 2.01 PIPING IDENTIFICATION

A. Stencils.

B. Letter size shall be as follows:

| Overall Pipe Size | Minimum Letter Height |
|---|---|
| Up to 1-1/4 in. diameter | 1/2 in. high |
| 1-1/2 in. to 2 in. diameter | 3/4 in. high |

### 2.02 PIPING IDENTIFICATION SCHEDULE

A. Identify piping as follows:

| Type of Service | Background Color | Letter Color | Designation |
|---|---|---|---|
| Wet Sprinkler | Red | White | FIRE-WET |

### 2.03 VALVE IDENTIFICATION

A. 2 in. diameter, 19 ga., brass tag with brass jack chain. 1/4 in. high stamped letters over 1/2 in. high stamped numbers, both black-filled.

## 2.04 VALVE IDENTIFICATION SCHEDULE

A. Identify valves as follows:

| **Type of Service** | **Valve Tag Designation** |
|---|---|
| Sprinkler | FIRE |

## PART 3 EXECUTION

## 3.01 COORDINATION

A. Coordinate to ensure that the identification used by all Trades is uniform in type, style, and appearance.

## 3.02 INSTALLATION

A. Piping:
   1. Apply piping identification only after any finish painting is completed.
   2. Provide service designation, stencils, and flow arrows at **MAXIMUM 25 FT.** intervals.
   3. Also identify piping at connections to equipment, at valves, at branches from main, and at each riser.
   4. Where a pipe passes through a wall, apply a service label on the pipe where it enters and exits the wall.
   5. Apply stencil over background, in colors as indicated above, and varnish over when dry. Stencils shall be readable from a standing position.

B. Valves:
   1. Provide valve tags. Tags shall be stamped with service designation and numbered consecutively for each system. Attach tags to valves in such a manner that valve shall be operable without removing or damaging tag, or attach tags as directed by the Architect. Tags shall be readable from a standing position when valve is in normal position. Add valve tag numbers to Record Drawings.
   2. Prepare a valve tag directory with charts showing locations, designations, and sizes of valves. Laminate under plastic and mount as directed by the Architect. Include additional copies of valve charts in the Operating and Maintenance Manuals.

END OF SECTION 21 05 53

# SECTION 21 05 60

# REQUIREMENTS FOR COMPLETION OF FIRE-SUPPRESSION WORK

## PART 1 GENERAL

### 1.01 RELATED DOCUMENTS

A. Section 01 77 00, “Closeout Procedures.”

B. Section 21 05 00, “Common Work Results for Fire Suppression.”

C. Section 21 05 06, “Fire-Suppression Submittals.”

D. Section 21 05 07, “Fire-Suppression Operating and Maintenance Manuals.”

E. Section 21 05 53, “Identification for Fire-Suppression Piping and Equipment.”

### 1.02 DESCRIPTION

A. Complete and submit the following list, which is a partial list of the items required prior to Contract Completion:
   1. Submittals. Refer to Section 21 05 06.
   2. Operational tests, adjustments, and inspections of all equipment and systems, as required in this, as well as other, Sections. Refer to Section 21 05 00.
   3. Protection and cleaning. Refer to Section 21 05 00.
   4. Operating and Maintenance Manuals. Refer to Section 21 05 07.
   5. Record Drawings. Refer to Section 21 05 00.
   6. Painting. Refer to Section 21 05 00.
   7. Equipment warranties.
   8. Guarantee. Refer to Section 21 05 00.
   9. Equipment and piping identification; valve tagging. Refer to Section 21 05 53.
   10. Instruction of the Owner’s personnel as required in this, as well as other, Sections.
   11. Spare parts as required in this, as well as other, Sections.

B. Provide or perform all of the above items before Contract Completion.

## PART 2 PRODUCTS

### 2.01 SPARE PARTS

A. Provide a receipt, signed by the Owner, for all spare parts and insert it in the Operating and Maintenance Manuals.

B. Furnish (1) complete set of the following spare parts for the Owner’s use after the guarantee period expires:
   1. Gaskets for each piece of equipment that requires gaskets.
   2. Special keys, wrenches, and similar items required, or special tools.

3. Fire suppression water pressure gauge.
4. Any other parts mentioned elsewhere.

## PART 3 EXECUTION

### 3.01 FINAL OPERATING TESTS AND PROCEDURES

A. Prior to Contract completion, conduct system operational tests for a period of at least (5) days, not necessarily consecutive, as scheduled by the Construction Manager, to demonstrate fulfillment of the requirements of the Contract. During this time, adjust equipment so that it will perform as the Manufacturer intended, and so that systems will function as designed.

B. Operate each system in every mode of operation, and check the position of valves, switches, and other devices for proper closure, operation, and switching.

### 3.02 INSTRUCTION OF OWNER'S PERSONNEL

A. Provide training schedule and training outline for approval (45) days prior to Contract Completion.

B. After all system operational tests have been completed, schedule an instruction period with the Construction Manager. Schedule well in advance, so that all of the Owner's personnel may attend if they desire. Coordinate with the Construction Manager and Architect for date and time of training sessions.

C. Participate in training sessions. Instruct the Owner's personnel in the operation and maintenance of all systems and equipment. Use Operating and Maintenance Manuals to familiarize the Owner's personnel with equipment and procedures. Allow time as necessary for this instruction.

D. Record a video of all Owner training, instructions, and equipment start-up demonstrations on a digital video disc (DVD). Turn over a copy of the DVD to the Construction Manager.

E. Instruction shall include the following:
   1. Location of equipment and explanation of what it does (function).
   2. Reference to operating instruction manuals for record and clarity.
   3. Coordination of written and verbal instructions, so that the operation of each system is fully understood by operating personnel.
   4. Complete review of items contained in Operating and Maintenance Manuals.
   5. Discussion of maintenance procedures that must be followed by the Owner.

F. Provide a copy of OFCC Form No. F390-03, "Certification of Equipment Demonstration," signed by the Construction Manager, to the Architect. Insert copies in each Operating and Maintenance Manual.

## 3.03 FOLLOW-UP INSPECTIONS

A. Make an inspection within (90) days after occupancy of the building to make minor adjustments as needed to ensure that all equipment is operating properly and that satisfactory conditions are being maintained throughout, and to satisfy any unusual conditions. Schedule with the Architect. Consult with the Construction Manager.

B. A minimum of (1) month before the end of the guarantee period, contact the Owner and Architect to discuss system operation, and to plan for the future care and maintenance of the system.

C. (1) month before the end of the guarantee period, contact the Owner and perform an inspection to review any items needing correction.

## 3.04 PUNCH LIST PROCEDURE

A. Refer to Section 01 77 00.

END OF SECTION 21 05 60

# SECTION 21 10 00

# WATER-BASED FIRE-SUPPRESSION SYSTEMS

## PART 1 GENERAL

### 1.01 RELATED DOCUMENTS

A. Section 21 05 23, “General-Duty Valves for Water-Based Fire-Suppression Piping.”

B. Section 21 05 29, “Hangers and Supports for Fire-Suppression Piping and Equipment.”

C. Section 21 05 53, “Identification for Fire-Suppression Piping and Equipment.”

D. Section 21 13 13, “Wet-Pipe Sprinkler Systems.”

### 1.02 DESCRIPTION

A. Provide piping and fittings as shown or required to completely install all water-based fire-suppression systems on this Project.

B. Provide fire suppression specialties or accessories as required by either the Equipment Manufacturer or the Local Code Authority.

### 1.03 QUALITY ASSURANCE

A. Standards:
   1. National Fire Protection Association (NFPA):
      a. 2007 NFPA 13, “Standard for the Installation of Sprinkler Systems.”
      b. 2011 NFPA 70, “National Electrical Code® (NEC),” Articles 110 and 408.
   2. American National Standards Institute (ANSI) B31.1, “Code for Power Piping.”
   3. American Society of Sanitary Engineers (ASSE).
   4. American Society for Testing and Materials (ASTM).
   5. American Society of Mechanical Engineers (ASME).
   6. American Welding Society (AWS).
   7. Food and Drug Administration (FDA).
   8. Ohio Administrative Code (OAC) 4101:1, Board of Building Standards: 2011 Ohio Building Code.

B. **ALL** specialties listed in this Section shall conform to the following Standards:
   1. Listed and labeled by Underwriters Laboratories, Inc. (UL) “Fire Protection Equipment List.”
   2. Approved by Factory Mutual Global (FMG).
   3. NFPA.

4. National Electrical Manufacturers Association (NEMA).
5. ASTM.

## PART 2 PRODUCTS

### 2.01 PIPING FOR SPRINKLERS

A. Threaded, welded, or grooved pipe shall be Schedule 30 or Schedule 40 steel as listed in NFPA 13.

B. Mains Larger than 2 in.: Schedule 10 roll-grooved pipe shall be permitted. **SCHEDULE 5 SHALL NOT BE USED.**

C. 2 in. and Smaller: **ANY WALL THICKNESS LESS THAN SCHEDULE 30 SHALL NOT BE USED.**

D. Black steel (ASTM A53).

E. Wrought steel (ANSI B36.10M).

F. Seamless welded steel (ASTM A53, ASTM A135, or ASTM A795).

G. Type "K," "L," or "M" seamless copper tubing (ASTM B88), equivalent in strength and pressure ratings to respective steel pipe specified.

### 2.02 UNIONS

A. In copper pipe: Bronze 150 lb. ground joint, solder end (do not use wrought copper unions).
   1. Acceptable Manufacturers: Epco, Rockwell, Mueller, Chase, Crane, Dart, Flagg, or Nibco.

B. In steel pipe: Black malleable iron, 250 lb. bronze ground ball joint.
   1. Acceptable Manufacturers: Mueller, Chase, Crane, Epco, Fairbanks, Grinnell, or Stockham.

C. Dielectric: Material shall be compatible for the type of service.
   1. Acceptable Manufacturers: Epco, Capitol, Dart, Watts, or Vogt.

### 2.03 FITTINGS

A. Cast Iron Threaded or Flanged Fittings: 125 lb. SWP or 250 lb. SWP (ANSI B16.4 and ANSI B16.1).

B. Malleable Iron Threaded Fittings: 150 lb. SWP or 300 lb. SWP (ANSI B16.3).

C. Factory-made wrought steel, butt-weld fittings (ANSI B16.9).

D. Butt-welding ends for pipe, valves, flanges, and fittings (ANSI B16.25).

E. Steel pipe flanges and flanged fittings (ANSI B16.5).

F. Forged steel fittings, socket-welded and threaded (ANSI B16.11).

G. Wrought copper and bronze solder-joint pressure fittings (ANSI B16.22). **Option:** "T-drill" mechanically formed tee connections, brazed joints.

H. Roll Grooved Couplings and Fittings:
   1. If grooved piping system is used, the Installing Contractor shall have had prior experience installing at least (5) grooved mechanical piping systems.
   2. Grooved couplings may be installed on 2 in. to 24 in. roll grooved standard weight pipe.
      a. Install Schedule 40 pipe in accordance with Coupling Manufacturer's instructions.
      b. Install flexible couplings with 750 psi pressure rating and 150 deg. F. rating:
         1) Victaulic Style 77.
         2) Tyco-Grinnell Figure 705.
         3) Anvil-Gruvlok Figure 7001.
      c. Install rigid couplings with 750 psi pressure rating and 150 deg. F. rating, sizes 2 in. through 6 in.:
         1) Victaulic Style 009 (slant bolt pad) with bolt pads metal-to-metal.
         2) Tyco-Grinnell Figure 772 with even-gap bolt pads.
         3) Anvil-Gruvlok Figure 7401 with even-gap bolt pads.
      d. **ALL OTHER TYPES OF ROLL GROOVED COUPLINGS ARE NOT ACCEPTABLE.**
   3. Victaulic Option: Installing Contractor may use a ductile iron bolted branch outlet with locating collar, Grade E pressure-responsive gasket seal, and carbon steel bolts and nuts.
   4. Refer to Article 3.02 CC. 3. for additional Manufacturer's requirements regarding on-site participation in Contractor training and periodic inspections of the work.
   5. Acceptable Manufacturers: Victaulic Company of America, Tyco-Grinnell, or Anvil-Gruvlok.

## 2.04 JOINTS

A. Mechanical Joints:
   1. Bolts for steel, cast iron, brass, and bronze, 250 lb. SWP, 450 deg. F. or less, shall be carbon steel with American Standard Regular square heads, and American Standard heavy hexagon semi-finished nuts.
   2. ASME A307, Grade B, tee head, high-tensile steel bolts and nuts may be used.

B. Threaded Piping Joints:
   1. Use NPT tapered threads. (ASME B1.20.1.)
   2. Joints shall be made with TFE tape, applied to male thread only.
   3. **Option:** Use Permatex pipe dope.

C. Flanged: Cast iron or cast bronze, 125 lb. or higher as required.
   1. Acceptable Manufacturers for dielectric flange and bolt isolators: Capitol, Crane, Dart, Epco, or Vogt.

D. Gaskets: Nonmetallic. 1/8 in. minimum thickness, fibrous type with double coat of graphite, asbestos-free, ASME B16.21, except use Type 304 stainless steel with carbon steel guide on high temperature piping systems.

E. Bolts and Other Hardware:
   1. Bolts for steel, cast iron, brass, and bronze, for 250 lb. SWP, and for 450 deg. F. or below: Carbon steel, with American Standard regular, square heads and American Standard heavy-hexagon, semi-finished nuts.
   2. Where equipment is installed outside, all hardware and bolts shall be stainless steel.
   3. ASME B18.21, Tee-head, high tensile steel bolts and nuts may be used in mechanical joint pipelines.

F. Filler Materials:
   1. Solder: Shall meet ASTM B32. Alloy Sn94 and Sn95 shall be used.
   2. Brazing: Shall meet AWS A5.8.
   3. Welding: Shall comply with AWS D10.12.

## 2.05 SOLDER AND BRAZING ALLOYS

A. Brazing filler metal (Classification BCUP-3 or BCUP-4) (AWS 5.8).

B. Solder metal, 95/5 tin-antimony, Grade 95 (ASTM B32).

## 2.06 NIPPLES

A. Same weight and material as pipe with which they are used, except shoulder nipples shall be extra-heavy. Short nipples are not allowed.

## 2.07 DRAIN VALVES

A. Refer to Section 21 05 23 for acceptable Manufacturers and Model numbers.

## 2.08 HANGERS AND SUPPORTS

A. Refer to Section 21 05 29.

## 2.09 DRAINS

A. Furnish drains using Schedule 80 black steel pipe (ASTM A53). **Exception:** Through exterior walls, the piping shall be galvanized or non-ferrous.

B. Acceptable Manufacturers: Reliable Automatic Sprinkler Co., Potter Electric Signal, Keles, System Sensor, Potter Roemer, Viking, Tyco Fire Products, Globe Fire Sprinkler Corp., Croker, Firematic, Automatic Sprinkler, or Victaulic.

## 2.10 IDENTIFICATION SIGNS

A. Reliable Automatic Sprinkler Co. Model A:
   1. 18 ga. steel, porcelain-enameled, with white lettering on red background.
      a. Valve control: Style A.

b. Specific identification: Style B.
c. Fire alarm: Style D.
d. Hydraulic calculated system: Style E.

2. 20 ga. steel, porcelain-enameled, white lettering on red background. Cold weather: Style C.

B. Other Acceptable Manufacturers: Approved equal by Globe Fire Sprinkler Corp. or Tyco Fire Products.

## PART 3 EXECUTION

### 3.01 COORDINATION

A. Coordinate pipe runs and elevations with other Contractors before installation.

B. Coordinate with Local Fire Department regarding the exact location of valves, Fire Department connection, etc., and for the proper number, size, and type valve or hose threads required. Install correct required threads.

C. Coordinate locations of exposed piping in finished areas, such as gymnasium and cafeteria, with the Architect.

### 3.02 INSTALLATION — PIPING AND FITTINGS

A. The following instructions apply to all water-based fire suppression piping systems, except where otherwise noted.

B. Contractor shall provide information on chases, sleeves, and openings required for its Work to other Contractors.

C. Arrange all piping in accordance with the best standards of the Trade, with risers plumb, and horizontal mains and branches run parallel or perpendicular to the building walls.

D. Install all piping as required in connection with this installation.

E. Install piping parallel to building walls, except where specifically shown otherwise.

F. Keep piping level, except where a slope is required.

G. Use eccentric reducers to keep top of pipe level.

H. If other means of draining are not provided, install drain valves at all low points to permit complete draining of the fire suppression system.

I. Pitch all piping to drain toward alarm valve and/or riser. Make provisions to drain all piping. Provide auxiliary drains where necessary.

J. Avoid trapping of piping.

K. Install all piping in a neat and workmanlike manner.

L. Cut pipe accurately, and work into place without forcing or springing.

M. Remove burrs to full inside diameter of pipe by reaming.

N. Clean piping components, at time of erection, of loose material.

O. Install piping so as to provide clearance for the following:
   1. Personnel passage and headroom.
   2. Operation of doors or windows.
   3. Equipment.
   4. Electrical panels, lighting, and electrical outlets.
   5. Owner's apparatus and equipment.

P. Do not install piping across, in front of, or below the items listed below.
   1. Windows.
   2. Door openings.
   3. Access panels.
   4. Lighting fixtures.

Q. Do not install piping within 36 in. in front of, above, over, or in the immediate vicinity of, electrical panels, electrical switchgear, or other electrical equipment, as described in 2011 NEC 110 and 408. Where this is not possible, if approved in writing by the Architect, provide a sheet metal drip pan under piping to prevent water and condensate from running or dripping down on the electrical equipment, at no additional cost to the Owner.

R. Where piping is installed in new masonry block walls, coordinate with the General Trades Contractor so piping enters the wall at a masonry joint wherever possible.

S. Where any system piping runs or components are so placed as to cause or contribute to a conflict, they shall be rerouted and readjusted at the expense of the Contractor causing the conflict. Where a conflict arises, the Architect's decision shall be final in regard to the arrangement of equipment, ductwork, piping, etc.

T. Contractor shall assume cost and responsibility for all cutting and patching resulting from improper coordination of its Work.

U. Provide offsets in system piping runs, additional fittings, necessary drains and valves, and devices required to complete the installation.

V. Offsets:
   1. Provide offsets for the proper operation of the system.
   2. Contractor may need to offset or reroute pipes as required to resolve interferences that develop in the field.
   3. Exercise due and particular caution to determine that all parts of the work are quickly and easily accessible.
   4. In pipe spaces to be entered for servicing, offset piping so that, where possible:
      a. All lateral runs are located either near floor or 6 ft.-0 in. or higher above floor.
      b. All vertical piping is held close to the wall through 6 ft.-0 in. or higher above floor to permit access.
   5. Keep all piping to side of chases wherever possible.

6. Where special conditions are encountered in field, the Architect shall decide arrangement and alignment of piping.

W. Offset lines around columns, beams, and other obstructions as required.

X. Conceal all piping in interior areas having ceilings, unless otherwise noted.

Y. Conceal all pipes, except in equipment rooms, in rooms without ceilings, or where specifically directed otherwise.

Z. Escutcheons:
1. Where exposed pipes pass through walls, floors, or ceilings of finished rooms, provide chrome-plated escutcheons.
2. Contractor may provide prime-coated black iron escutcheons in unfinished rooms.
3. Protect escutcheons from tool marks.

AA. Protect all piping, fittings, and valves from excessive tool marks.

BB. Make changes in pipeline direction with fittings. Do not bend or spring piping.

CC. Joints, Unions, and Connections
1. Threaded pipe and fittings:
a. Ream pipe ends at threads to full cross-sectional area after cutting.
b. Threads shall conform to ASME B1.20.1.
2. Flanged connections:
a. Flanged joints shall be faced, square, and true.
b. Install gaskets suitable for the operating temperature and pressure of the fluid or gaseous medium being piped.
3. Grooved pipe:
a. Install grooved joint couplings and fittings in accordance with the Manufacturer's written installation instructions.
b. Grooved ends shall be clean and free from indentations, projections, and roll marks in the area from pipe end to groove.
c. Use the Manufacturer's recommended gasket lubricants, including any specific lubricants to enhance the temperature rating of the coupling. Lubricate gaskets both inside and out where required by the Coupling Manufacturer. Contractor shall verify lubricant requirements.
d. Gaskets shall be an elastomer grade suitable for the intended service and shall be molded and produced by the Grooved Coupling Manufacturer.
e. A factory-trained representative of the Grooved Coupling Manufacturer shall provide on-site training for the Contractor's field personnel in the use of grooving tools, application of groove, and installation of grooved joint products. The Manufacturer's Representative shall periodically visit the job site and review installation. Provide documentation of the site visits by the

Manufacturer's Representative in the Operating and Maintenance Manuals, as required by Section 21 05 60, to include verification of proper gasket lubricants, uniform gap spacing of couplings, proper torque requirements, and notation of any installation deficiencies.

f. Remove and replace any joints deemed improperly installed.

g. Installing Contractor shall verify that there are no bolt pad gaps on metal-to-metal type couplings, or that equal gaps are maintained on both sides of the coupling, in accordance with the Manufacturer's specifications.

h. When tightening bolts, alternate until properly torqued in accordance with the Manufacturer's specifications. The Manufacturer's published torque ratings shall be verified and documented by random sampling of installed couplings.

4. Welded pipe:
   a. An AWS-certified welder shall perform all welding and brazing in accordance with ANSI B31.1.
   b. A qualified welder, certified in accordance with OBC Chapter 4101.8, shall install welded pressure piping.
   c. Welds shall be stamped at each joint or fitting.
   d. Do not torch-cut pipe.
   e. Butt-welded joints shall have substantially full penetration and recommended bead reinforcement.
   f. Slip-on, socket, and fillet welds shall have geometry as indicated in ANSI B31.1.
   g. Remove all slag, weld scale from joints, and other welding residue as work proceeds and at completion.
5. Soldered and brazed connections:
   a. Joints shall have pipe or tubing end reamed to full inside diameter after cutting.
   b. Exterior of joint shall be smooth.
   c. Clean with steel wool.
   d. Apply flux to prevent oxidation.
   e. Open valves fully before soldering.
   f. Apply solder or brazing filler material, and thoroughly heat to completely melt material and cause it to migrate completely over the mating surfaces.
   g. Solder and brazing work shall comply with ANSI B31.1.
   h. 100% lead-free solder shall be used on water piping, joints, and fittings.
6. Do not use bullhead connections.
7. Where connection size is smaller than piping, make reduction at final connection only. Do not reduce size of pipe drop.
8. Make reductions in piping lines with reducing couplings or weld fitting reducers.

9. Connections to equipment or devices:
   a. Make connections to equipment as recommended by the Manufacturer or as detailed on the Drawings.
   b. Install each union or flange to permit removal of parts and equipment, and in a position permitting the device or equipment to be removed without disconnecting piping beyond the union or flange.
   c. Provide union or flange in final piping connection to each device or item of equipment, and elsewhere, as required to make-up or disconnect piping.
   d. Do not make welded connections to equipment (or valves).
10. Dissimilar material connections:
   a. Install dielectric unions or dielectric flanges on all connections between copper tubing and steel pipe and between copper tubing and equipment having ferrous metal connection.
   b. Isolate direct contact between pipe, fittings, flanges, and hangers or dissimilar metal by use of dielectric unions, shims, gaskets, coatings, or other approved methods.
   c. Use dielectric gaskets where joining dissimilar piping material.

DD. Install union adjacent to each threaded valve.

EE. Install all unions and valves in accessible locations. Provide a removable ceiling, or ceiling or wall access panels, as necessary. Coordinate installation of access panels.

FF. Valves:
   1. Install valves on each piece of equipment.
   2. Install valves at service connections to equipment not provided with valves.
   3. Install valves at branch lines from main lines.

GG. Piping and sprinklers located in, and passing through, exterior walls shall be subject to review by the Architect.

HH. Do not install piping containing fluids subject to freezing in exterior walls, regardless of wall insulation location. Piping subject to freezing may be installed in unheated ceiling spaces only where specifically shown, immediately above the ceiling of a heated space, with building insulation closely packed above the piping to protect it from freezing. Contractor providing the piping shall ensure that vulnerable piping is protected against freezing.

II. At the end of each day's work, provide caps and/or plugs at all openings in installed piping for suppression. Prevent the possibility of **ANY** foreign materials entering piping.

JJ. Identify all piping installed under this Work as required in Section 21 05 53.

## 3.03 PIPE CLEANING

A. After erection, and prior to putting in service, lines shall be blown or flushed free of loose materials. Clean strainer screens and sediment pockets prior to putting lines in service.

B. Clean out and flush new water piping systems.

C. Flush fire suppression mains at GPM flows required by NFPA 13.

END OF SECTION 21 10 00

# SECTION 21 13 13

# WET-PIPE SPRINKLER SYSTEMS

## PART 1 GENERAL

### 1.01 RELATED DOCUMENTS

A. Section 21 05 23, "General-Duty Valves for Water-Based Fire-Suppression Piping."

B. Section 21 05 29, "Hangers and Supports for Fire-Suppression Piping and Equipment."

C. Section 21 10 00, "Water-Based Fire-Suppression Systems."

### 1.02 DESCRIPTION

A. Extend existing hydraulically designed wet-pipe sprinkler piping system, including sprinklers and piping, to provide coverage in the new building addition indicated on the Drawings. Hazard classification shall be as required by Code.

B. Design, install, and test complete system in accordance with NFPA 13, perform hydraulic calculations, prepare drawings, and submit to City of Whitehall Building Department for approval.

C. Test complete system.

### 1.03 QUALITY ASSURANCE

A. **ALL** sprinklers, alarm valves, fittings, hangers, and related equipment shall conform to the following standards:
   1. Listed and labeled by Underwriters Laboratories, Inc. (UL).
   2. Approved by Factory Mutual Global (FMG).
   3. National Fire Protection Association (NFPA): 2007 NFPA 13, "Standard for the Installation of Sprinkler Systems."
   4. American National Standards Institute (ANSI).
   5. American Society for Testing and Materials (ASTM).
   6. American Society of Mechanical Engineers (ASME).
   7. American Welding Society (AWS).

## PART 2 PRODUCTS

### 2.01 PIPING AND FITTINGS

A. Unless noted otherwise, the piping between Fire Department connection and check valve, and the drain lines, shall be galvanized Schedule 30 or Schedule 40 black steel (ASTM A53) as listed in NFPA 13.

B. Refer to Section 21 10 00.

## 2.02 SOLDER AND BRAZING ALLOYS

A. Refer to Section 21 10 00.

## 2.03 HANGERS AND SUPPORTS

A. Refer to Section 21 05 29.

## 2.04 VALVES

A. Refer to Section 21 10 00.

## 2.05 WATER FLOW SWITCHES

A. Refer to Section 21 10 00.

## 2.06 SPRINKLERS

A. Automatic spray, wet or dry, glass bulb, upright, pendent, sidewall and concealed, directional deflectors, nominal 1/2 in. orifice, and 1/2 in. NPT threaded connection. Die cast brass, with hex-shaped wrench boss integrally cast into body.

B. Furnish the following sprinkler types:
   1. Rooms with ceilings: Victaulic Model V3802. Quick response, 5.6 K-factor, standard coverage, pendent, concealed, 1/2 in. adjustment, and electroplated white finish cover plate.
   2. Rooms without ceilings, mechanical rooms, and storage rooms: Victaulic Model V2704. Quick response, 5.6 K-factor, standard coverage, chrome-plated, upright, with guard.
   3. Lobby area and all public areas: Victaulic Model V3802. Quick response, 5.6 K-factor, standard coverage, pendent, concealed 1/2 in. adjustment, with electroplated white finish coverplate.
   4. At the Contractor's option, extended coverage sprinklers may be provided in lieu of the above sprinkler types, provided that hydraulic calculations establish adequate system flow and pressure.

C. Acceptable Manufacturers: Tyco Fire Products, Reliable Automatic Sprinkler Co., Automatic Sprinkler, Firematic, Globe, Victaulic, or Viking.

## 2.07 ESCUTCHEON PLATES

A. Install the following escutcheon plates where sprinklers protrude from ceiling, wall, or soffit.
   1. Flat, 1-piece or 2-piece, round, white metal, unless noted otherwise.
   2. Flat, round, 2-piece plastic, off-white finish: "Ceiling Tite-200."

# PART 3 EXECUTION

## 3.01 INSTALLATION

A. Piping: Do not install wet piping in areas where space temperature may drop below 40 deg. F. Refer to Section 21 10 00 for additional requirements.

B. Joints: Refer to Section 21 10 00.

C. Furnish access panels. Unless otherwise noted, coordinate all access panel locations, if required, with the General Trades Contractor, who shall install access panels.

D. Sprinkler layouts shall be subject to review and approval by the Architect.

E. Locate sprinklers generally in center of ceiling tiles. Refer to details on the Drawings.

F. Ceiling Temperature Coordination: Install sprinklers having temperature ratings as required by NFPA 13. Select the proper sprinkler temperature ratings as required for the expected ambient temperature of the rooms or areas.

G. Density Requirements:
   1. Verify Occupancy Hazard for all areas, and minimum density requirements and sprinkler spacing of each area based on stated occupancies, in accordance with NFPA 13.
   2. Classroom and Office Areas (Light Hazard Occupancy): Minimum density of 0.10 GPM per sq. ft. over the most remote 1,500 sq. ft. In hydraulically-calculated systems, each sprinkler shall have a maximum allowable protection area of 225 sq. ft. per sprinkler; maximum spacing of 15 ft. between sprinklers.
   3. Higher densities and closer spacing shall be as required by Code; refer to NFPA 13, Tables 8.6.2.2.1(a) and (b).

H. Do not install sprinklers that have been dropped or damaged, or that show a visible loss of fluid. **DO NOT USE SPRINKLERS WITH CRACKED BULBS.**

I. Sprinkler bulb protector shall remain in place until the sprinkler is completely installed. Remove bulb protector by hand, after installation is complete and prior to system being placed in service. **DO NOT USE TOOLS TO REMOVE THE BULB PROTECTOR.**

J. Install piping and sprinklers as high as possible exposed in areas without ceilings.

K. Where any wet sprinkler piping is installed above ceilings, and below ceiling insulation, ensure that the ceiling insulation has no insulation voids above the piping.

L. Provide shielding to prevent water from reaching electrical switchgear, computer equipment, electrical panels, or other equipment.

M. Install additional sprinklers below platforms, piping, ductwork, or similar items that obstruct an area below the ceiling or roof deck larger than 4 ft. x 4 ft.

N. Install return bends to all pendent-type sprinklers to prevent collection of sediment in sprinklers.

O. All drain and test piping passing through an exterior wall shall be galvanized or non-ferrous to prevent staining the exterior wall by rust.

## 3.02 TESTS AND INSPECTIONS

A. Test the sprinkler system hydrostatically at 225 PSIG for (2) hours with no drop in pressure. Measure the hydrostatic test pressure at the low point of the individual system or zone being tested. There shall be no visible leakage during the hydrostatic testing.

B. Make provision for the disposal of water issuing from test outlets to avoid property damage.

C. Do not use brine or other corrosive chemicals for testing systems.

D. Perform all tests before any piping is covered or concealed.

E. Should leaks occur, remove each defective section or defective fitting and replace with new materials at no cost to the Owner.

F. Repeat tests until no leaks occur.

G. After all tests have been completed, complete and forward the Contractor's Material and Test Certificate, required by NFPA 13, to the Code Authority having Jurisdiction.

H. Arrange and schedule all inspections required by the Code Authority having Jurisdiction.

END OF SECTION 21 13 13

# DIVISION 22

# PLUMBING INDEX

## 22 00 00 PLUMBING


| | |
|---|---|
| Common Work Results for Plumbing | 22 05 00-1 thru 20 |
| Plumbing Excavation and Backfill | 22 05 05-1 thru 6 |
| Plumbing Submittals | 22 05 06-1 thru 4 |
| Plumbing Operating and Maintenance Manuals | 22 05 07-1, 2 |
| Plumbing Sleeves | 22 05 15-1 thru 4 |
| General-Duty Valves for Plumbing Piping | 22 05 23-1 thru 3 |
| Hangers and Supports for Plumbing Piping and Equipment | 22 05 29-1 thru 7 |
| Identification for Plumbing Piping and Equipment | 22 05 53-1 thru 3 |
| Requirements for Completion of Plumbing Work | 22 05 60-1 thru 3 |
| Facility Drainage Piping Cleanouts | 22 05 76-1, 2 |
| Plumbing Insulation | 22 07 00-1 thru 5 |


## 22 10 00 PLUMBING PIPING AND PUMPS


| | |
|---|---|
| Plumbing Piping and Pumps | 22 10 00-1 thru 8 |
| Domestic Water Piping | 22 11 16-1 thru 5 |
| Domestic Water Piping Specialties | 22 11 19-1, 2 |
| Sanitary Waste and Vent Piping | 22 13 16-1 thru 5 |
| Facility Storm Drainage | 22 14 00-1 thru 5 |


## 22 40 00 PLUMBING FIXTURES


| | |
|---|---|
| Plumbing Fixtures | 22 40 00-1 thru 4 |

# SECTION 22 05 00

# COMMON WORK RESULTS FOR PLUMBING

## PART 1 GENERAL

### 1.01 PREFACE

A. Plumbing Contractor is responsible for the Work described in Division 22, "Plumbing," Sections 22 00 00 through 22 99 99 (as included), unless otherwise noted.

B. **Terminology:** In the Sections listed above, the term "Contractor" shall mean the Plumbing Contractor performing Work on this Project, unless otherwise noted.

C. The provisions listed in this Section shall supersede any conflicting statements contained elsewhere in the Specifications. Contractor is responsible for the more restrictive requirement between these general provisions and other requirements contained elsewhere in the Specifications.

### 1.02 RELATED DOCUMENTS

A. Refer to the following additional Divisions and Sections for specific requirements, responsibilities, and methods relating to Division 22 Work:
   1. Division 00, "Procurement and Contracting Requirements": All sections.
   2. Division 01, "General Requirements": All sections.
   3. Division 03 "Concrete," Section 03 30 00, "Cast-in-Place Concrete."
   4. Division 07, "Thermal and Moisture Protection," Section 07 92 00, "Joint Sealants."
   5. Division 09, "Finishes," Section 09 91 00, "Painting."

### 1.03 DESCRIPTION

A. Furnish material, labor, tools, accessories, and equipment to complete and leave ready for operation all plumbing systems of this Project as described in these Specifications and as shown on the Drawings.

B. Use sufficient workers and competent supervisors in execution of this portion of the Work to ensure proper and adequate installation throughout. In the acceptance or rejection of installed plumbing system, no allowance will be made for lack of skill on the part of workers.

C. Work includes, but is not limited to, the following:
   1. Plumbing insulation.
   2. Plumbing piping and pumps:
      a. Interior domestic water piping system.
      b. Interior sanitary piping system.
      c. Interior storm piping system.

3. Plumbing fixtures.

D. Work Not Included:
   1. Site work (Includes all work from point of connection to existing utilities):
      a. Sanitary sewer system: General Trades Contractor shall provide entire system. Plumbing Contractor connects at 5 ft.-0 in. outside building, except as shown otherwise.
      b. Storm sewer system: General Trades Contractor shall provide entire system. Plumbing Contractor connects at 5 ft.-0 in. outside building.

E. The plumbing system shall not be considered complete and acceptable unless, and until, all Code and Governing Agency requirements are satisfied.

F. Refer to Division 01 and Section 22 05 60, “Requirements for Completion of Plumbing Work,” for additional requirements.

## 1.04 COORDINATION OF WORK

A. Contractor shall read the entire Specification covering other branches of the Work. It will be held responsible for the coordination of its work with the work performed by other Trades.

B. Contractor shall coordinate its Work carefully with all other Contractors.

C. Do not install work without first coordinating the layout, routing, etc., with other Contractors whose work may be affected.

D. Coordinate location of all work with other Contractors and equipment.

E. Consult all Contract Drawings that may affect the location of any equipment, apparatus, and piping, and make any other adjustments in location as necessary to secure coordination.

F. Coordinate locations of all Plumbing Work with sprinklers, piping, hangers, ductwork, diffusers, grilles, registers, lighting fixtures, smoke and heat detectors, speakers, occupancy sensors, conduits, cable trays, and other equipment, and with ceilings, soffits, structural members, joists, metal decks, bracing, etc.

G. Contractor shall be responsible for the cost of additional engineering work required for changes to the work as shown or described, due to the relocation of items requested by the Contractor.

H. Review all equipment nameplate ratings and advise the Architect immediately of any system design changes required to wire the equipment properly.

## 1.05 EXAMINATION OF SITE

A. Certain existing conditions may affect the manner or sequence of the performance of the Work.

B. Before submitting its Bid, it is recommended that the Contractor visit the site of the proposed Project.

C. Existing services, structures, and operating schedules may need to be reviewed, prior to bidding, to facilitate the installation of the Work without disrupting the normal operation of the facility.

D. After receipt of Bids, no allowances will be made for lack of knowledge of Project conditions.

E. Verify and reconcile Work required by the Contract Documents with existing conditions at the Site.

F. Should the Contractor note any discrepancies during the Bidding Period, it shall notify the Architect immediately, in writing, to permit issuance of an Addendum to prevent misunderstandings at a later date.

## 1.06 STANDARDS OF QUALITY

A. It is the intent that the Plumbing Work be complete in every respect.

B. All work on this Project shall conform to applicable National, State, and Local Building Codes and any local laws, ordinances, regulations, and requirements pertaining to this work.

C. Contractor shall provide Work of the highest quality, conforming to the accepted practices and standards of the Trades involved.

D. Further definition of quality is given by reference to various Laws, Codes, Standards, and Regulations.

E. Only a Contractor and craftsmen licensed by the State as required shall install this Plumbing Work.

F. Licensed Contractors shall perform Work as required by State Codes.

G. Code references, when made, shall be based upon the currently enforced Edition.

H. Install Work in compliance with the Latest Enforced Edition of all applicable Codes, Regulations, and Standards, unless otherwise noted.

I. Any Law, Code, Standard, or Regulation referred to in other Sections of Division 22 is included in its entirety as a part of these Specifications.

J. Give notice and comply with all Laws, Ordinances, Rules, Regulations, and lawful orders of the Code Authority having Jurisdiction bearing on the performance of the Plumbing Work.
   1. If the Contractor observes that any of the Contract Documents are at variance therewith in any respect, it shall promptly notify the Architect in writing, and any necessary changes will be arranged by the Architect.
   2. If the Contractor performs any Work knowing it to be contrary to such Laws, Ordinances, Rules, and Regulations, and fails to give prior

notice to the Architect, the Contractor shall assume full responsibility for, and shall bear all costs associated with, correcting the Work.

K. Obtain all permits, licenses, and certifications required by the Code Authority having Jurisdiction.

L. The following Codes apply to this Work:
   1. Local: Franklin County: Health Code.
   2. State of Ohio: Ohio Administrative Code (OAC):
      a. OAC 4101:1: 2011 Ohio Building Code.
      b. OAC 4101:2: 2011 Ohio Mechanical Code.
      c. OAC 4101:3: 2011 Ohio Plumbing Code.
      d. OAC 4101:5: 2011 Elevator Code.
   3. National:
      a. National Fire Protection Association (NFPA), Current Edition. Codes as listed in subsequent Specification Sections, including 2011 NFPA 70, "National Electrical Code® (NEC)."
      b. Americans with Disabilities Act (ADA) (36 CFR 1191).
      c. American Society of Mechanical Engineers (ASME) Welding Code B31.1.0.

M. Work shall comply with Franklin County Health Department requirements.

N. Methods and materials shall be certified where noted in the individual Specification Sections.

O. All equipment and appliances installed on this Project shall bear the label of an Approved Testing Agency, and shall be installed in accordance with the Manufacturer's instructions for the labeled equipment and appliances.

P. All structural steel used on this Project shall be manufactured in the United States, per Ohio Revised Code 153.011.

## 1.07 CONTRACT DRAWINGS

A. The Contract Drawings are schematic and show approximate locations, general arrangement, and extent of Work.

B. The Contract Drawings are not intended to show every vertical or horizontal offset that may be necessary to complete the systems. Having piping and fittings fabricated and delivered in advance of making actual measurements shall not be sufficient cause to avoid making offsets or other changes as may be necessary to install piping and equipment.

C. Verify exact locations in the field, and coordinate with all other Contractors.

D. The Architect shall approve, in writing, significant deviations from the Drawings.

E. The Architect reserves the right to make minor changes in location that do not require additional labor or material, up to the time of roughing-in, without additional cost. The Architect reserves the right to determine what is "significant" and what is "minor."

F. If a conflict occurs between the Drawings and Specifications, immediately submit a written request for an interpretation or clarification from the Architect, who shall determine which interpretation has precedence.

G. Should overlap of work among the Trades become evident, immediately submit a written request for an interpretation or clarification from the Architect, who shall determine which interpretation has precedence. In such event, none of the Contractors shall assume that it is relieved of the Work that is specified under its branch unless instructions are received, in writing, from the Architect.

## 1.08 APPLICABLE CODES, LICENSES, PERMITS, FEES, AND NOTICES

A. The Construction Manager will submit all Contract Drawings and Specifications to the Franklin County Board of Health, pay for the Plan Examination fee, and obtain Plan Approval.

B. Contractor shall secure and pay for any **ADDITIONAL** permits, governmental fees, bonds, licenses, and inspections required for the proper execution and completion of the Plumbing Work.

C. Contractor shall pay for all other fees and other charges related to Plumbing Work and payable to Utility Companies or Code Enforcement Agencies.

D. The Owner will pay for all water and sewer tapping fees. The Owner will apply for service.

E. It may be necessary to fully complete several portions of Work in one area, before other areas are started.

F. Contractor shall arrange and pay for all inspections required to obtain a Certificate of Beneficial Occupancy. Contractor shall include this cost in its bid.

## 1.09 CONTRACTOR'S RESPONSIBILITY

A. Provide a Superintendent, on site, whose duties include the directing and supervising of work. Inform the Architect of the Superintendent's name and phone number, and the method of contact when the Superintendent is not at the site.

B. Submit shop drawings for the installation of the plumbing system for review by the Architect before any plumbing work is installed, enlarged, or extended. Under **NO** circumstances shall any Work be performed prior to receiving shop drawings reviewed by the Architect.

C. As soon as possible after the Award of the Contract and the approval of Shop Drawings, the Contractor shall place orders for materials and equipment required for its Work. Immediately inform the Architect in writing as to any materials and equipment that cannot be obtained within the required time period, either due to conditions of the market or other governing factors.

D. Inspect each item of materials or equipment immediately prior to installation. Reject damaged and defective items.

E. Contractor shall determine erection procedures and sequence the construction to keep its work on schedule and to ensure the safety of the building and its occupants. This includes supplying whatever temporary bracing, guys, or tie-downs might be required. Such materials shall remain the Contractor's property after completion of the Project.

F. Provide attachment and connection devices and methods for securing work. Secure all work true to line and level and within recognized industry tolerances. Allow for expansion and building movement.

G. Recheck measurements and dimensions of the Work as an integral step of starting each installation.

H. Where mounting heights are not indicated, individual units generally can be mounted at industry-recognized standard mounting heights for the particular application indicated. However, the Architect must approve all mounting heights.

I. Coordinate the enclosure or concealment of the Work with the required inspections and tests so as to minimize the necessity of uncovering work for that purpose.

## 1.10 FACTORY INSTALLATION AND START-UP

A. For those items of equipment that are to be installed, tested, started up, and certified by a factory-trained Representative, furnish a letter from the Manufacturer to the Architect stating that this service shall be provided for this Project, describing the scope of services to be provided, and disclosing the name of the Representative assigned to provide the required services.

## 1.11 GUARANTEES AND WARRANTIES

A. Contractor shall guarantee its equipment, workmanship, and materials for a period of (1) year from the date of Contract Completion. Should defects develop within this period, the Contractor shall, at no cost to the Owner, remedy the defects and reimburse the Owner for all damage to other Work caused either by the defects or as a result of the work of correcting the same.

B. Refer also to Division 01 and other Specification Sections that define the starting date of the guarantee period, or that discuss either additional warranty requirements, or extended equipment warranties beyond the standard period.

C. Post-Warranty Service:

1. The products and Manufacturers identified throughout these Specifications represent reputable suppliers that generally have an inventory of spare parts, and a network of authorized service providers that can support the products installed on this Project.

2. Contractor shall assist the Owner for a period of (7) years in obtaining parts and service on the products installed, for a reasonable charge.
3. Once the Contractor's 1-year guarantee has expired, the Owner will pay the cost of these parts and service.
4. If the item cannot be repaired, the Contractor shall recommend an equivalent replacement item at a reasonable cost to the Owner.

## 1.12 PROJECT RECORD DOCUMENTS

A. Contractor shall maintain, at the job site, (1) copy of the following items related to its Trade:
   1. Contract Drawings.
   2. Specifications.
   3. Addenda.
   4. Reviewed Shop Drawings.
   5. Change Orders.
   6. Other modifications to Contract.
   7. Field Test Records.
   8. Minutes of Coordination and Progress Meetings.
   9. (1) set of the Contract Drawings that will be used for Record Drawings. This set shall be used exclusively for documenting and recording the exact location of all installed Work.

B. Do not use record documents for construction purposes.

C. Store record documents in temporary field office, apart from documents used for construction.

D. Provide files and racks for storage of record documents.

E. Maintain record documents in clean, dry, legible condition.

F. Use red ballpoint pen for all marking of record documents.

G. Make record documents available at all times for inspection by the Architect and Construction Manager.

H. Record Drawings:
   1. Record Drawings shall be legibly marked to record actual "as-built" construction with the following information:
      a. Horizontal and vertical location of underground utilities and appurtenances referenced to permanent surface improvements.
      b. Location of internal utilities and appurtenances concealed in construction referenced to visible and accessible features of structure.
      c. Field changes of dimension and detail.
      d. Changes made by Field Work Order or Change Order.
      e. Details not on the original Contract Drawings.
   2. Do not permanently conceal any work until the required information has been recorded. This especially applies to site utilities.

3. Record deviations in locations of concealed piping, valves, equipment, and all buried or concealed utility lines and services, etc., dimensioned from a fixed control point, including the following:
   a. Depth of bury.
   b. Invert elevations at start of storm or sanitary line.
   c. At each change of direction.
   d. At each change of slope.
   e. As required for further reference.
4. Minor piping variations need not be recorded.
5. Record locations of abandoned piping, including exterior lines.
6. Record deviations made necessary to incorporate equipment different from the Design Base equipment.
7. Record all Addendum Items.
8. Add valve tag numbers to the Record Drawings.
9. At completion of project, the Contractor shall deliver (1) copy of its Record Drawings to the Construction Manager.
10. Contractor shall accompany its Record Drawings with a transmittal letter, in duplicate, containing the following information:
    a. Date.
    b. Project title and number.
    c. Contractor's name and address.
    d. Title and number of each record document.
    e. Certification that each document as submitted is complete and accurate.
    f. Signature of the Contractor or its Authorized Representative.

## 1.13 ABBREVIATIONS AND SYMBOLS

A. Titles and abbreviations may be used in these Specifications. Abbreviations may be shown on the Plumbing Drawings. Refer to the list of abbreviations attached to this Section. Refer also to the symbols lists shown on the Drawings for further abbreviations. All titles and abbreviations may not necessarily apply to this Work.

## 1.14 DEFINITIONS

A. "Provide": To furnish, install, and connect to make completely ready for regular operation.

B. "Furnish": To supply or deliver to site complete with all required accessories and installation instructions.

C. "Install": To mount, erect, hang, or fasten in place, and connect to make ready for regular operation.

D. "Concealed": Either embedded in masonry or other construction, or installed below floor slab, behind wall furring, within chases or soffits, within walls, within double partitions, or above ceilings.

E. "Exposed": In full or partial view; not "Concealed" as defined above.

F. "Accessible Ceiling": Lay-in ceiling with removable ceiling tiles.

G. "Piping": Pipe, fitting, flanges, valves, controls, specialties, hangers, bracing, insulation, and other items required or necessary.

H. Refer to additional Definitions in Division 01 and in the State Building and Mechanical Codes.

## 1.15 UTILITIES AND OUTAGES

A. Where necessary, make minor relocations to permit installation of the Plumbing Work.

B. Advise the Architect immediately of major conflicts to permit modification of the Contract Documents prior to bidding.

C. Conform to all Utility Company requirements.

D. Avoid inconveniencing the Owner.

E. Notify the Construction Manager at least (2) working days in advance of commencing work in the area of existing utilities.

F. Contractor shall alert occupants of nearby premises of any emergency conditions that arise as a result of its work in connection with existing utilities.

G. Record the location of all concealed utilities on the Record Drawings.

# PART 2 PRODUCTS

## 2.01 DESIGN BASE MANUFACTURER STANDARD

A. The Drawings and Specifications reflect a design based on the specific equipment requirements and configuration for a Design Base Manufacturer. Design coordination of equipment with the building and with other Trades has been made for this specific Model and Manufacturer of equipment. Where several Manufacturers are listed for an item of equipment or material, the first-named shall be considered the Design Base Manufacturer Standard.

## 2.02 OTHER ACCEPTABLE COMPONENTS (MANUFACTURERS)

A. Other Manufacturers listed in the Specifications shall be acceptable; however, whenever the Contractor elects to furnish specified equipment or material manufactured by other than the Design Base Manufacturer, the Contractor shall be responsible for the cost and coordination of all modifications required to accommodate the elected equipment or material, including any Work of other Trades that might be affected. Where changes to other Trades' Work are required, the Contractor shall include the additional costs of all such Work in its bid.

B. Any specified Equipment Manufacturer furnished by the Contractor, other than the Design Base Manufacturer, shall be, in the opinion of the Architect, equivalent in quality, design, features, performance, arrangement, and

appearance to that of the Design Base equipment or material, including any special features or requirements.

C. The inclusion of other Manufacturers in these Specifications shall not be construed to infer that each Manufacturer's product has been reviewed by the Architect for this application, or that it will provide all the features or capabilities required, or that its physical dimensions can be accommodated in the available space. Verify that the proposed equipment will provide all features and accommodations provided by the Design Base Manufacturer, and that it will fit in the available space.

D. Where deemed necessary by the Architect, the Contractor shall, at no additional cost to the Owner, prepare layouts for these other brands of equipment that may have different dimensional or service requirements from the Design Base Manufacturer Standard. Submit these layouts to the Engineer for review.

E. Reimburse the Owner for the cost of any design changes incurred by the Architect in the preparation of revised Drawings or Specifications to accommodate the use of any Manufacturer other than the Design Base Manufacturer.

F. The Architect will not give consideration to any other Manufacturer that the Contractor proposes to use, unless the Architect approves the Manufacturer, and specifically names the Manufacturer in the Addenda to the Specifications.

## 2.03 SUBSTITUTIONS

A. Contractor shall submit information for review no later than (10) days prior to the bid opening to the Architect on any other proposed equipment or material that the Contractor desires to use.

B. Contractor shall be responsible for the same costs of coordination and modifications, etc., listed above in Article 2.02, "Other Acceptable Components (Manufacturers)."

C. If the Architect determines that the proposed Manufacturer is acceptable, the Architect will issue an Addendum adding that Manufacturer to the Specification.

## 2.04 EQUIPMENT SUITABILITY

A. All equipment provided shall perform as intended. All items listed shall function properly, and as the Manufacturer intended. Install equipment according to the Manufacturer's recommendations. Properly attach equipment to the floor, wall, or structure. Each item of equipment shall be compatible with all other accessories or hook-ups, including piping, controls, wiring, and other equipment not furnished by the equipment Manufacturer, but required to achieve the intended function.

## 2.05 MISCELLANEOUS ACCESSORIES

A. Provide any additional adapters, fittings, trim, structural steel angles, channels, unistrut, brackets, etc., as necessary to securely install all items of equipment specified or shown on the Drawings. All steel installed outside or exposed to moisture shall be hot-dipped galvanized.

B. These accessories are required even though they may not be shown or detailed on the Drawings.

C. Installation shall be compatible with the building construction on which the item is to be located.

D. Verify the type of construction prior to ordering the equipment item, so that all required accessories are included.

## 2.06 QUANTITIES

A. Equipment may be referred to in these Specifications, or on the Drawings, as either singular or plural; the Contractor shall verify the exact number of items required to complete its Work.

## 2.07 EQUIPMENT PROTECTION

A. Unless equipment and material can be protectively stored in a manner acceptable to the Architect, they shall not be delivered to the site until the Work is ready to receive them.

B. Protect all equipment and materials during construction from damage by weather, water, dirt, paint droppings, welding and cutting spatters, and other construction activities.

C. All materials or equipment stored outside shall be elevated and protectively covered in a secured and locked area.

D. Store materials and equipment sensitive to weather or construction conditions inside. Where necessary, store sensitive equipment in a heated area.

E. During construction, cover all equipment and other items that are susceptible to damage until they can be installed in place.

F. Immediately repair or replace damaged equipment or materials to the satisfaction of the Architect and at no additional cost to the Owner.

G. Contractor shall protect the building and other Contractors' material and equipment from damage caused by its Work. Protect floors from cutting oil and chips.

H. Use all means necessary to protect materials before, during, and after installation.

I. Refer also to individual Specification Sections for specialized protection.

## PART 3 EXECUTION

### 3.01 SAFETY

A. Maintain Project in accordance with Federal, State, and Local Safety and Insurance Standards. All procedures shall comply with the latest regulations of the Occupational Safety and Health Administration (OSHA).

B. Contractor shall provide eye and ear protection, as approved by OSHA, for each of its employees.

C. Contractor shall be solely responsible for construction means, methods, techniques, sequences, procedures, and safety precautions and programs in connection with the Work. The Owner, Construction Manager, Architect, or Engineer will not be responsible for the Contractor's failure to employ proper safety procedures.

D. Contractor shall be solely responsible for the structural design of all temporary items that it uses in the construction of the building, or that become a permanent part of the building, including, but not limited to, hoisting, the temporary bracing for structural steel, and the shoring for concrete and masonry work, cut earth banks, suspended ceilings, equipment, walls, etc.

E. Exercise precaution for the protection of persons and property. Provide guard rails, barricades, enclosures, canopies, passageways, lanterns, warning lights, and other protective safety devices as necessary or required by the Code Authorities having Jurisdiction, and as required to protect persons and property against accidentally dropped materials or other construction hazards. Provide guard lights at all barricades, railings, obstructions in the streets or sidewalks, trenches, or pits.

F. Provide protection as may be required to prevent glass breakage. Replace broken glass at no cost to the Owner.

G. Hazards Control:
   1. Do not dispose of volatile wastes, such as mineral spirits, oil, or paint thinner, in storm or sanitary drains.
   2. Store volatile wastes in covered metal containers, and remove from premises daily.
   3. Prevent accumulation of waste that creates hazardous conditions.
   4. Provide adequate ventilation during use of volatile or noxious substances.

H. Excavation Safety: Refer to Section 22 05 05, "Plumbing Excavation and Backfill."

### 3.02 AIR HANDLING PLENUMS

A. Where space is used for air handling, such as above ceilings and elsewhere, do not install combustible or noxious materials.

B. All materials shall be listed for use in air handling plenums. All wiring shall be UL 910-listed.

## 3.03 EQUIPMENT ACCESS

A. Locate all units to provide sufficient access to operate equipment or service other items requiring periodic maintenance. Coordinate with structure and with all other Contractors' work.

## 3.04 ACCESS PANELS

A. Unless otherwise noted, furnish all access panels required for concealed plumbing work to the General Trades Contractor for installation.

B. Provide all other access panels as needed.

C. Mark locations of access panels on the Record Drawings.

## 3.05 BLOCK COURSE COORDINATION

A. Mounting heights are called out on the Drawings for many items. Adjust equipment mounting heights to accommodate brick or block coursing. Coordinate installation of all items in a masonry wall with the General Trades Contractor and Architect.

## 3.06 CUTTING AND PATCHING

A. All cutting and patching shall be accomplished in a neat and workmanlike manner, acceptable to the Architect.

B. Cutting:
   1. Contractor shall perform all cutting required for installing its own Work unless otherwise noted.
   2. Cutting shall be done with such tools and methods so as to prevent unnecessary damage to surrounding areas and equipment.
   3. Use rotary drills where the cutting of holes through concrete, brick, plaster, or tile is necessary.
   4. No cutting shall be done that will, in any way, reduce the structural strength of the building. Cutting of structural support beams, joists, plates, or other structural members is strictly prohibited without the specific written consent of the Architect and the Structural Engineer. Should such cutting be necessary, consult the Architect and do not proceed further without written approval of the Architect.

C. Patching:
   1. Contractor shall be responsible for patching except as otherwise noted.
   2. Only a qualified Finish Tradesman, skilled in the respective craft required, shall perform patching.
   3. Patching shall match adjacent surface construction.
   4. Materials and equipment used in the patching work shall comply with requirements of other Sections of this Specification.

D. All cutting and patching shall be done promptly, and all repairs shall be made as necessary to leave the entire Work in good condition, including all

cutting, fitting, and drilling of masonry, concrete, metal, wood, plaster, and other materials as specified or required for proper assembly, fabrication, installation, and completion of the Work.

E. Coordinate drilling, welding, etc., and method of attachment to columns, joists, beams, etc., with the Structural Engineer and General Trades Contractor before proceeding.

F. If a Contractor finds it necessary to cut into Work of another Contractor, the cutting and patching shall be performed by such other Contractor at this Contractor's expense. With the written consent of the Architect, the Contractor shall be allowed to perform the cutting. Patching shall be similarly executed.

G. Underground Plumbing Piping:
   1. Avoid the need to cut concrete by roughing in piping BEFORE concrete is installed.
   2. Cut and replace the existing exterior paving or sidewalks, as required to install underground work.
   3. Contractor shall excavate and backfill for its own work.
   4. Contractor shall be responsible for any other repairing of excavated areas.
   5. Coordinate with the General Trades Contractor.

H. Precast Concrete Work:
   1. Contractor shall coordinate any holes it requires in precast concrete work with the General Trades Contractor during the precast shop drawing process.
   2. In lieu of sleeves in precast concrete work, cut holes after erection of concrete.
   3. Verify with the Architect that all openings to be field-cut are in conformance with the Precast Manufacturer's specifications before any cutting or drilling proceeds.

I. Roofing:
   1. General Trades Contractor shall be responsible for all cutting of roofing, modification, roof opening framing, or repair work.
   2. A qualified Roofing Contractor shall perform all work in a manner such that any existing roof warranties are not voided.
   3. General Trades Contractor shall install roof pipe boots and roof pipe boots flashing, and repair roofing. Contractor shall furnish pipe boots.
   4. General Trades Contractor shall provide flashing, and repair roofing for plumbing items, including, but not limited to, plumbing vents, etc.

J. General Trades Contractor shall cut and frame all roof openings in new construction as required for plumbing items, including, but not limited to, plumbing vents, etc.

K. General Trades Contractor, or other Tradesman approved by the Architect, shall replace floors, ceilings, roofs, etc., damaged during construction. The cost of repairs shall be borne by the Contractor causing damage.

L. Provide openings, with lintels if needed, for sleeves, piping, and other similar openings in new interior masonry walls and floors. Locate and dimension the opening for the General Trades Contractor prior to construction. Refer to Plumbing Drawings.

M. Contractor shall be responsible for all cutting of the slab related to its own Work, if required.

N. Contractor shall be responsible for construction that is disturbed during the installation of piping, conduit, fixtures, or equipment.

O. Cutting and patching includes remodeling and repairing of previously graveled or paved areas, walks, curbs, sod, floors, etc., as may be required. Saw cuts shall be done in neat, straight lines.

P. Contractor shall repair or replace any roads, sidewalks, or other items that its employees may damage during the performance of this Work.

Q. Refer to Section 01 73 29, “Cutting and Patching,” for additional requirements.

## 3.07 PAINTING AND RELATED WORK

A. **ALL PAINTING SHALL BE DONE BY A QUALIFIED TRADESMAN SKILLED IN THE CRAFT.**

B. General Trades Contractor shall be responsible for finish painting of walls, ceilings, and other Architectural items in the areas of new and existing construction.

C. Contractor shall repaint any previously finished areas disturbed by its own cutting and patching. Painting of the patched area shall match color of the adjacent construction in the general area of the patch. Repaint the entire wall-to-wall and floor-to-ceiling surface if, in the opinion of the Architect, a uniform appearance cannot be accomplished by touch-up.

D. Clean, spot-prime with zinc chromate, and finish equal to the original quality, any factory-finished equipment that has rusted, has been damaged, or has deteriorated. Repaint the entire surface if, in the opinion of the Architect, a uniform appearance cannot be accomplished by touch-up.

E. Clean, remove rust from, and paint with zinc-chromate primer, any plumbing support steel and bare ferrous metal that is not factory-painted, shop-painted, or galvanized, and that remains exposed to view in the finished areas of the building, including mechanical/electrical rooms and storage rooms. Consult with the General Trades Contractor to ensure that the prime coat shall be compatible with the finish coat.

F. Clean, remove rust from, and paint with zinc-chromate primer and aluminum-bronze paint, all steel hangers, boxes, straps, and rods, furnished

under this Contract, that are not provided with rust-protective finish or are damaged in installation, and that remain exposed to view or are in unfinished and mechanical spaces.

G. Paint with a prime coat any ferrous metal installed outside the building that is not factory-painted, shop-painted, or galvanized.

H. Clean all new insulation coverings. If pre-sized insulation is not used, insulation coverings shall be sized if finish painting is required.

I. Refer to Section 09 91 00 for additional requirements.

## 3.08 CLEANING

A. Maintain all work areas in a neat and orderly manner, free of debris. Clean up all occupied travel areas at the end of each shift, or immediately after use for material removed.

B. It is the intent of the Specifications that each Contractor and Subcontractor shall do its own cleanup, move materials that are in the way of construction, repair and replace any damage it does, and do any other work of a similar nature which must be done.

C. Equipment cleaning and touch-up:
   1. Use only cleaning materials recommended by Manufacturer of the surface to be cleaned.
   2. Clean interiors of all enclosures of dirt and debris before installing trim or covers.
   3. Brush-clean, prime, and paint-in-kind rust spots on any part.
   4. Clean copper piping in exposed areas with fine emery cloth and solvent.
   5. Clean all gauges, thermometers, traps, dirt legs, strainers, and fittings.

D. Final cleaning:
   1. Repair, patch, and touch up all scratched or damaged surfaces to specified finish to match adjacent surfaces, before final acceptance of the work. Repair dents and marred finishes to the satisfaction of the Architect. Prepare for finish painting, where painting is specified.
   2. Thoroughly clean all fixtures, material, finished surfaces of equipment, painted, enameled, or varnished work, and all other exposed finished surfaces, removing all labels, stickers, marks, stains, fingerprints, spots, rust, oil, grease, dirt, dust, and other foreign materials, so that the Work is presented in a complete and finished condition, ready for acceptance and intended use.
   3. Employ experienced workers, or professional cleaners, for final cleaning.
   4. Verify that all drains are free of debris.
   5. Expedite the cleaning, washing, waxing, and polishing required within other Sections of these Specifications.

E. Refer to Section 01 74 19, “Construction Waste Management and Disposal,” for additional requirements.

## 3.09 TESTS AND INSPECTIONS

A. The Contract Documents, Laws, Ordinances, Rules, Regulations, or Orders of any Code Authority having Jurisdiction may require the Work to be inspected, tested, or approved.

B. Test and check all control valves, drain valves, gauges, alarm devices, and waterflow and supervisory switches for proper operation. Submit a written record of these tests to the Architect.

C. Arrange for inspection of the Work by the Code Authority having Jurisdiction. Inspections shall be conducted by the Franklin County Board of Health.

D. Notify the Construction Manager of all scheduled tests and adjustments at least (48) hours before they are scheduled, so that the Construction Manager may witness same. If the Contractor performs any test or adjustment without the Construction Manager present, or without proper notification, the Contractor shall perform the test or adjustment a second time, in the presence of the Construction Manager. Coordinate all test schedules with the Construction Manager to minimize inconvenience.

E. Concealed lines shall be tested and approved before being concealed. If a leak appears during the final test, repair the line and any damage resulting from the leak.

F. After Work has been completed, but before pipe covering has been applied, test each system as required by other Sections of this Specification. At the test pressures, the circulation shall be free and the piping shall be proven free of leaks.

G. Provide all required testing and obtain approvals. Secure required certificates of inspection, testing, or approval, and include them in the Operating and Maintenance manuals.

H. Contractor shall bear all costs of such inspections, tests, or approvals.

I. Should any of the Work be covered up or enclosed prior to completion of all required inspections and approvals, uncover the Work as required and, after it has been completely inspected and approved, make all repairs and replacements with such materials and workmanship as are necessary to secure the approval of the Architect, and at no additional cost to the Owner.

J. Furnish all test pumps, gauges, equipment, and personnel required, and test as necessary, to demonstrate the integrity of the finished installation to the approval of the Code Authority having Jurisdiction and the Architect.

K. Check each piece of equipment for defects and verify that all parts are properly furnished and installed, that all items function properly, and that all adjustments have been made.

# TITLES, ABBREVIATIONS, AND SYMBOLS

| | |
|---|---|
| & | And |
| @ | At |
| ∠ | Angle |
| Ø | Diameter |
| # | Number |
| Ø | Round OR Phase |
| A. | Compressed air |
| A.D. | Access door OR Area drain |
| A.F.D. | Acid floor drain |
| A.F.F. | Above finished floor |
| A.P. | Access panel |
| A.W.C.O. | Acid wall cleanout |
| AABC | Associated Air Balance Council |
| AB. | Above |
| ACI | American Concrete Institute |
| ACPA | American Concrete Pipe Association |
| ADA-AG | Americans with Disabilities Act — Accessibility Guidelines |
| ADC | Air Diffusion Council |
| AH | Air handler |
| ALT. | Alternate |
| ALUM. | Aluminum |
| AMCA | Air Movement and Control Association |
| amp | ampere |
| ANSI | American National Standards Institute |
| APPROX. | Approximately |
| ARCH. | Architect |
| ARI | Air-Conditioning & Refrigeration Institute |
| ARR'T. | Arrangement |
| ASA | Acoustical Society of America |
| ASHRAE | American Society of Heating, Refrigerating, and Air Conditioning Engineers |
| ASME | American Society of Mechanical Engineers |
| ASPE | American Society of Plumbing Engineers |
| ASSE | American Society of Sanitary Engineering |
| ASTM | American Society for Testing & Materials |
| AUTO. | Automatic |
| AV | Acid vent |
| AW | Acid waste |
| AWG | American wire gauge |
| AWS | American Welding Society |
| AWWA | American Water Works Association |
| B.D.D. | Backdraft damper |
| B.T. | Bathtub |
| B.V. | Backwater valve |
| BAL. | Balancing |
| BFP | Backflow preventer |
| BHP | Brake horsepower |
| BICSI | Building Industry Consulting Services International |
| BLDG. | Building |
| BSBD.RAD. | Baseboard radiation |
| BSMT. | Basement |
| BTM. | Bottom |
| BTU | British thermal unit |
| C.B. | Catch basin |
| C.I. | Cast iron |
| C.O. | Cleanout |
| C/C | Center to center |
| C/L | Center line |
| CAB. | Cabinet |
| CAP. | Capacity |
| CEIL./CLG. | Ceiling |
| CFC | Chlorofluorocarbon |
| CFH | Cubic feet per hour |
| CFM | Cubic feet per minute |
| CFR | Code of Federal Regulations |
| CGA | Compressed Gas Association |
| CHEM. | Chemical |
| CISPI | Cast Iron Soil Pipe Institute |
| COL. | Column |
| COMB. | Combination |
| CONC. | Concrete |
| COND. | Condensate OR Condenser |
| CONN. | Connection OR Connect |
| CONST. | Construction |
| CONTR. | Contractor |
| CONV. | Convector OR Converter |
| COORD. | Coordinate |
| CSA | Canadian Standards Association |
| CSI | Construction Specifications Institute |
| CT | Current transformer |
| CU. FT. | Cubic feet |
| CU IN. | Cubic inch |
| CUH | Cabinet unit heater |
| D. | Deep |
| D.F. | Drinking fountain |
| D.L. | Door louver |
| D.M. | Damper motor |
| D.S. | Downspout |
| DB | Dry bulb |
| DBL. | Double |
| DCW | Domestic cold water |
| DET. | Detail |
| DHW | Domestic hot water |
| DHWR | Domestic hot water return |
| DIA. / Ø | Diameter |
| DIFF. | Diffuser |
| DIM. | Dimension |
| DISCH. | Discharge |
| DN. | Down |
| DOE | United States Department of Energy |
| DPR. | Damper |
| DR. | Door |
| DW | Distilled water |
| DWG. | Drawing |
| DWH | Domestic water heater |
| DWV | Drain, waste and vent |
| E.A.T. | Entering air temperature |
| E.C. | Electrical Contractor |
| E.S.P. | External static pressure |
| E.T. | Expansion tank |
| E.W.T. | Entering water temperature |
| EA. | Each |
| EFF. | Efficiency |
| EIA | Electronic Industries Alliance |
| ELEC. | Electric OR Electrical |
| ELEM. | Element |
| ELEV. | Elevation |
| ENGR. | Engineer |
| ENT. | Entering |
| EPA | Environmental Protection Agency |
| EQUIP. | Equipment |
| ETL | Electrical Testing Laboratories |
| EW | Eye wash |
| EWC | Electric water cooler |

| | |
|---|---|
| EXH. | Exhaust |
| EXIST. | Existing |
| EXT. | Exterior |
| F & T | Float and thermostatic |
| F. | Fan OR Fire |
| F.D. | Fire damper |
| F.E. | Fire extinguisher |
| F.E.C. | Fire extinguisher cabinet OR Food Service Equipment Contractor |
| F.H. | Fire hydrant |
| F.H.C. | Fire hose cabinet |
| F.H.E.C. | Fire hose/extinguisher cabinet |
| F.V. | Flush valve |
| FCC | Federal Communications Commission |
| FD | Floor drain |
| FDA | Food and Drug Administration |
| FHA | Federal Housing Administration |
| FIG. | Figure |
| FIN. | Finish |
| FIN.RAD. | Finned radiation |
| FLEX. | Flexible |
| FLR. / FL. | Floor |
| FMG | Factory Mutual Global |
| FOR | Fuel oil return |
| FOS | Fuel oil supply |
| FPC | Fire Protection Contractor |
| FPM | Feet per minute |
| FT. | Feet |
| FT.HD. | Feet of head |
| FURN. | Furnish(ed) |
| G | Gas |
| G.C. | General Contractor |
| G.I. | Grease interceptor |
| G.T.C. | General Trades Contractor |
| gal. | Gallon |
| GALV. | Galvanized |
| GEN. | General |
| GFI | Ground fault interrupter |
| GPM | Gallons per minute |
| GR | Grille |
| GRAV. | Gravity |
| H./HT. | Height |
| H.P. | High pressure |
| H.S. | Hair strainer |
| H'STAT | Humidistat |
| HAC | Heating and air conditioning |
| HB | Hose bibb |
| HCFC | Hydrochlorofluorocarbon |
| HHS | United States Department of Health and Human Services |
| HORIZ. | Horizontal |
| HP | Horsepower |
| HPC | High pressure steam condensate |
| HPS | High pressure steam |
| hr. | Hour |
| HTG. | Heating |
| HTR. | Heater |
| HUD | United States Department of Housing and Urban Development |
| HV | Heating and ventilating OR High velocity |
| HVAC | Heating, ventilating, and air conditioning |
| I.D. | Inside diameter |
| IAQ | Indoor air quality |
| ICC | International Code Council |
| ICEA | Insulated Cable Engineers Association, Inc. |
| IDF | Intermediate distribution frame |
| IEC | International Electrotechnical Commission |
| IEEE | Institute of Electrical and Electronics Engineers, Inc. |
| IESNA | Illuminating Engineering Society of North America |
| IN. | Inside OR Inches |
| IND. | Indirect |
| IND. U. | Induction unit |
| INSUL. | Insulation |
| INT. | Interior |
| INV. | Invert |
| INV. ELEV. | Invert elevation |
| IPS | Iron pipe size |
| IRI | Industrial Risk Insurers |
| ISO | International Organization for Standardization |
| J.R. | Janitor's receptor |
| JCAH | Joint Commission for Accreditation of Hospitals |
| kVA | Kilo volt-ampere |
| L. | Length |
| L.A.T. | Leaving air temperature |
| L.W.T. | Leaving water temperature |
| LAB | Laboratory |
| LAV | Lavatory |
| lb. | pound |
| LEED | Leadership in Energy and Environmental Design |
| LH | Left hand |
| LP | Liquefied petroleum |
| LPC | Low pressure steam condensate |
| LPS | Low pressure steam |
| LV'G. | Leaving |
| M.A. | Mixed air |
| M.O. | Motor operated |
| MAN. DPR. | Manual damper |
| MAT. | Material |
| MAX. | Maximum |
| MBH | 1,000 British thermal units/hour |
| MECH. | Mechanical |
| MET./MTL. | Metal |
| MEZZ. | Mezzanine |
| MFR. | Manufacturer |
| MH | Manhole |
| MIN. | Minimum |
| MISC. | Miscellaneous |
| MPS | Medium pressure steam |
| MS | Motor starter |
| MSS | Manufacturers Standardization Society of the Valve and Fittings Industry Inc. |
| MTD./MT. | Mounted OR Mount |
| N.I.C. | Not in contract |
| N.T.S. | Not to scale |
| N2 | Nitrogen |
| N2O | Nitrous oxide |
| NADCA | National Air Duct Cleaners Association |
| NAECA | National Appliance Energy Conservation Act |
| NB | National Board of Boiler and Pressure Vessel Inspectors |
| NCPI | National Clay Pipe Institute |
| NEBB | National Environmental Balancing Bureau |
| NEC | National Electrical Code |
| NEMA | National Electrical Manufacturers Association |
| NESHAPs | National Emissions Standards for Hazardous Air Pollutants |
| NFPA | National Fire Protection Association |
| NIOSH | National Institute for Occupational Safety and Health |
| NIST | National Institute of Standards and Technology |
| NO. OR # | Number |
| NOM. | Nominal |

| | |
|---|---|
| NP | Not permitted |
| NPT | National Pipe Thread Tapered |
| NSF | National Sanitation Foundation |
| NSPE | National Society of Professional Engineers |
| O. | Oxygen |
| O.A. | Outside air |
| O.D. | Outside diameter |
| O.I. | Oil interceptor |
| O.V. | Outlet velocity |
| O/C | On center |
| OAC | Ohio Administrative Code |
| ODH | Ohio Department of Health |
| ODMH | Ohio Department of Mental Health |
| ODMR/DD | Ohio Department of Mental Retardation and Developmental Disabilities |
| ODOE | Ohio Department of Energy |
| ODOT | Ohio Department of Transportation |
| ODRC | Ohio Department of Rehabilitation and Correction |
| ODYS | Ohio Department of Youth Services |
| OPG. | Opening |
| OPP. | Opposite |
| ORC | Ohio Revised Code |
| OSHA | Occupational Safety and Health Administration |
| OU./OZ. | Ounce |
| P.D. | Pressure drop |
| P.I.V. | Post indicator valve |
| P/L | Property line |
| PDI | Plumbing & Drainage Institute |
| PEI | Petroleum Equipment Institute |
| PLBG. | Plumbing |
| PNEU. | Pneumatic |
| PRESS. | Pressure |
| PROP. | Propeller |
| PRV | Pressure-reducing valve |
| PSF | Pounds per square foot |
| PSI | Pound-force per square inch |
| PSIG | Pound-force per square inch gauge |
| PT | Plaster trap OR Potential transformer |
| PVC | Polyvinyl chloride |
| R | Register |
| R.A. | Return air |
| R.D. | Roof drain |
| R/W | Right of way |
| RAD. | Radius OR Radiation OR Radiator |
| RECIRC. | Recirculating |
| REG. | Register |
| REINF. | Reinforced |
| REL. | Relief |
| REQ'D. | Required |
| RH | Right hand |
| RHC | Reheat coil |
| RM. | Room |
| RPM | Revolutions per minute |
| RTA/C | Rooftop air-conditioning unit |
| RW | Raw water |
| RWC | Rainwater conductor |
| S | Sink |
| S & R | Supply and return |
| S. DPR. | Smoke damper |
| S.A. | Shock absorber OR Supply air |
| S.F. | Square feet |
| S.M., S/M | Sheet metal |
| S.P. | Static pressure |
| S.S. | Service sink OR Storm sewer |
| S.S., S/S | Stainless steel |
| SAN. | Sanitary sewer |
| SB | Shampoo bowl |
| SD | Shower drain OR Smoke detector |
| SECT. | Section |
| SHR. | Shower |
| SHT. | Sheet |
| SHT. MT'L. | Sheet metal |
| SMACNA | Sheet Metal and Air Conditioning Contractors National Association |
| SPEC. | Specification |
| SQ. | Square |
| SQ. FT. | Square feet |
| SQ. IN. | Square inch |
| ST | Sound trap |
| STAT | Thermostat |
| STD. | Standard |
| STL. | Steel |
| STM. | Storm |
| SUCT./S | Suction |
| SW | Softened water |
| SW. | Switch |
| T.W. | Tempered water |
| T'STAT | Thermostat |
| TD | Temperature difference |
| TEMP. | Temperature |
| THERM. | Thermometer OR Thermostat |
| TIA | Telecommunications Industry Association |
| TYP. | Typical |
| UC | Undercut |
| UH | Unit heater |
| UL | Underwriters Laboratories, Inc. |
| UR | Urinal |
| USGBC | United States Green Building Council |
| UV | Unit ventilator |
| V. | Vent |
| V.T.R. | Vent through roof |
| VAC. | Vacuum |
| VC | Vacuum cleaning |
| VCP | Vitrified clay pipe |
| VERT. | Vertical |
| VIB. ISO. | Vibration isolator |
| VOC | Volatile organic compound |
| VSP | Vitrified sewer pipe |
| W. | Width OR Water |
| W.G. | Water gauge |
| W/ | With |
| W/O | Without |
| W/W | Wall to wall |
| WAT. | Water |
| WB | Wet bulb |
| WC | Water closet OR Water column |
| WH | Wall hydrant OR Water heater |
| WO | Waste oil |
| WOG | Water/oil/gas |
| XFMR | Transformer |
| YD. | Yard |
| YH | Yard hydrant |

END OF SECTION 22 05 00

# SECTION 22 05 05

# PLUMBING EXCAVATION AND BACKFILL

## PART 1 GENERAL

### 1.01 RELATED DOCUMENTS

A. Section 01 73 29, “Cutting and Patching.”

B. Division 02, “Existing Conditions.”

C. Division 03, “Concrete.”

D. Section 22 05 00, “Common Work Results for Plumbing.”

### 1.02 DESCRIPTION

A. The bedding and backfill requirements listed in this Section represent a minimum requirement. If Local or State requirements are in excess of listed requirements, such requirements shall supersede.

B. **ALL EXCAVATION AND BACKFILL WORK SHALL COMPLY WITH REQUIREMENTS OF THE LATEST OSHA STANDARDS.**

C. Provide excavation and backfilling or directional boring for Plumbing Work. Backfill to finish grade or to levels suitable for finish grading. General Trades Contractor shall provide finish grading.

D. Refer to Section 01 73 29 and Section 22 05 00 for cutting and patching responsibilities.

E. Coordinate routing of underground lines with the Architect to minimize disruption and damage to trees, shrubs, walks, drives, and other landscape features.

F. Excavation, backfill, surface repair, and traffic control within the public right-of-way shall be in accordance with governing agency rules and regulations.

G. Remove unusable or surplus excavated material from the site. Deposit any usable excavated material where directed by the Construction Manager.

H. Locate existing underground utilities, if any, in the areas of new Work. If utilities are to remain in place, provide adequate means of protection during earthwork operations. Should uncharted, or incorrectly charted, piping or other utilities be encountered during excavation, notify the Architect immediately for instructions before proceeding. Cooperate with other Contractors, Utility Companies, and the Construction Manager in keeping services and the facilities in operation.

I. Excavation damage to, or interruption of service of, any underground utility shall be a liability of the Contractor, whether or not plotted on the Drawings. Promptly repair or replace all damage to any existing utility to the full satisfaction of the Utility Company, the Utility Owner, and the Architect.

J. All existing utility service piping, conduits, wiring, etc., which are uncovered, whether within or beyond the property lines, shall be suitably supported, protected, and maintained in operation, and shall be protected against settlement when excavations are refilled.

K. Coordinate timing of excavations where required by Code Authority having Jurisdiction, or where otherwise specified herein.

L. Provide pipe bedding for all storm sewer and sanitary sewer lines located below the floor slab.

M. Obtain approval from the Architect for bearing conditions.

N. Whenever, in the opinion of the Architect, the soil is unsuitable for supporting piping, provisions for proper foundations will be made and the Contract price will be adjusted accordingly.

O. Contact the Architect to obtain copies of Soils Reports, if available. Bidders are strongly urged to visit the site and investigate existing soil conditions themselves.

P. General Trades Contractor shall provide seed grass cover to reestablish landscape to existing conditions where disturbed by Plumbing Work. This includes replacement of existing plants, shrubs, and related items.

Q. General Trades Contractor shall repair and restore plants, shrubs, trees, sodded areas, paving, streets, curbs, and walks to match existing in the area where excavations are made.

R. General Trades Contractor shall maintain seeded lawns not less than (11) months after Contract Completion and add any backfill as required due to settling, etc. If seeded in non-growing season and not given full (11) months of maintenance, or if not considered acceptable at that time, continue the following growing season until an acceptable lawn is established, as determined by the Architect.

S. Rock excavation is not anticipated. Contractor will be entitled to additional compensation for excavating any rock that is not indicated on the Contract Drawings or in available Soils Reports. Refer to available soil boring data.
   1. If rock or boulders are encountered, immediately stop all excavation. Notify the Architect, and submit a cost per cubic yard, over and above Base Bid, for excavation and backfill of rock areas. Rock excavation is defined as the excavation of any buried boulders and rock, in excess of 1/2 cu. yd. in volume, which requires systematic drilling with jackhammer or use of other special equipment.
   2. All other excavation, including soft shale and similar sedimentary soil formations, shall be regarded as “earth” excavation, and shall be included in the Contractor’s Bid.
   3. Do not proceed with rock excavation without prior written authorization of the Construction Manager.
   4. Use of explosives is expressly prohibited.

## 1.03 REFERENCE DATUM

A. All dimensions or elevations are relative to finished grade (not existing grade).

## 1.04 EXISTING SOIL CONDITIONS

A. Refer to Soils Report.

## 1.05 QUALITY ASSURANCE

A. Standards:
   1. Ohio Department of Transportation (ODOT), "Construction and Material Specifications."
   2. State and Local requirements.
   3. Occupational Safety and Health Administration (OSHA) requirements.

# PART 2 PRODUCTS

## 2.01 BACKFILL

A. Typical backfill conditions:
   1. Piping where bedding is not specified or required by Code: Previously excavated material.
   2. All underground piping: Crushed stone (ODOT Item 304), pea gravel, or coarse sand from 4 in. below piping to slab or 4 in. below grade.
   3. Other piping outside building: Pea gravel from 4 in. below piping to 12 in. minimum above pipe, then previously excavated material.
   4. Concrete pads provided by the General Trades Contractor: Construction conforming to Division 02 and Division 03 requirements.

B. Materials:
   1. Crushed stone: (ODOT Item 304).
   2. Pea gravel: 1/8 in. minimum to 3/4 in. maximum diameter.
   3. Sand: Clean, dry, coarse or medium.
   4. Washed gravel: 3/4 in. size.

C. Materials Prohibited from Being Used for Backfill:
   1. Material containing large rocks (over 2 in.), building materials, masonry debris, cinders, rubbish, wood, or other material subject to decay.
   2. Any material which may cause damage to piping.
   3. Frozen earth.

# PART 3 EXECUTION

## 3.01 EXCAVATION

A. General Trades Contractor shall saw-cut existing street, drives, sidewalks, curbs, and parking lot paving, and other permanent hard surfaces that are encountered in the path of the excavation.

B. Excavations shall be open-cut from the surface. No undercuts will be permitted, except where specifically directed by the Architect.

C. Place no backfill until underground lines have been tested. Compact backfill in 6 in. deep layers. Mark location of trenches and lines on Record Drawings.

D. Hold trench width to a minimum.

E. Do not excavate utility trenches parallel to building, or column footings, closer than 5 ft., except with prior written approval of the Architect. When parallel trenches deeper than the building footings are required, the horizontal distance from the footing shall be equal to, or greater than, 1-1/2 times the vertical distance below the footing, but in no case shall the horizontal distance be less than 5 ft., except with the written approval of the Architect.

F. Bedded Piping: Mechanical excavation shall extend 4 in. to 6 in. below final elevation of pipe. In trenches cut through rock, mechanical excavation shall extend 6 in. below and around final elevation of pipe.

G. Whenever the soil is found unsuitable for supporting piping, provide proper foundation after receiving written approval of the Architect.

H. Remove, from site, excess materials unsuitable for fill.

I. Coordinate timing of excavations in advance with other Contractors, the Architect, and the Construction Manager.

## 3.02 PROTECTION

A. Maintain in place adequate barricades, guards, planking, plating, signage, warning lights, etc., at and around excavations.

B. Contact the Ohio Utilities Protection Service (800-362-2764) well in advance of the start of any excavation to determine if any of the Utility Companies have underground utilities in, or near, the project area.

C. Contact the Construction Manager and the Local Water and Sewer Department, Gas Company, Electric Company, Telephone Company, etc., regarding the possibility of encountering existing utilities. Maintain the integrity of all existing utilities.

D. Protect existing utilities encountered during excavation work in a manner acceptable to the Utility Owner. Contractor shall promptly repair or replace, at its expense, all damage to any existing utility to the full satisfaction of the Utility Company, the Utility Owner, and the Architect.

E. Provide and maintain bracing, shoring, and sheet piling or sheathing as required to safely support walls of the excavation. Barricade and maintain in a safe condition until backfilling is completed.

F. Provide and operate pumping equipment to keep excavation free of water at all times, if required.

G. Protect excavations from frost by covering and heating as necessary.

H. During backfilling of outside piping, install a continuous 4 in. wide vinyl plastic tape, with embossing, identifying buried service, 18 in. above pipe elevation on pipe centerline.
   1. Acceptable Tape Manufacturers: Seton, Brady, MSI, or Calpico.

## 3.03 BACKFILLING

A. Backfill only when exact locations of lines and equipment have been recorded, and all tests and inspections have been completed.

B. Do not place fill material on frozen ground, or use fill in a frozen condition.

C. Deposit fill in layers of thickness required by the nature of the soil, or as directed, but not exceeding 6 in. compacted thickness, to a point 24 in. above pipe, and 12 in. thickness above this point. Compact each layer to a uniform solid mass. Place fill in horizontal layers, beginning with lowest areas and building up until entire area to be filled is at a uniform elevation. Compaction shall be a minimum of 90 lbs. per cu. ft., laboratory dry weight.

D. Bedded Piping: Bed pipes in pea gravel, minimum 4 in. below pipe, 6 in. above pipe, according to Ohio Specifications CM 310.02, Grading “A.”

E. Control moisture content of compacted fill to ensure maximum density by adding water and working soil prior to compacting.

F. Use machine tampers around perimeter of foundation walls or areas inaccessible to large equipment and rollers. Do not use rolling equipment in areas adjacent to foundations.

G. Where excavations have not been properly filled or where settlement occurs, refill, compact, smooth off, and finish excavations to a final condition acceptable to the Construction Manager and Architect.

## 3.04 EXCAVATION SAFETY

A. Excavation and trench wall supporting, shoring, sloping, cribbing, stepping of excavations, and other steps required for safety shall be in strict accordance with OSHA and Local Code requirements.

B. Slope sides of excavations to comply with requirements of OSHA and Code Authority having Jurisdiction. Shore and brace where sloping is not possible because of space restrictions or instability of material exposed.

C. Maintain sides and slope of all excavations in a safe condition, until completion of backfilling.

D. Minimize time trenches are kept open. Fill as soon as possible.

E. Provide materials for shoring and bracing, such as sheet piling, uprights, stringers, and cross-braces, in good serviceable condition. Maintain shoring and bracing in excavations regardless of time period excavations will be open. Carry down shoring and bracing as excavation progresses.

F. Barricade open excavations occurring as part of this Work, and post with warning lights. Erect warning lights as required by OSHA and Code

Authority having Jurisdiction. Consult with the Architect regarding additional requirements.

G. Install steel cover plates, safety barricades, and coverings for holes in walks, pavements, streets, or grassy areas.

H. Protect existing structures that are to remain, such as utilities, sidewalks, pavements, and other facilities, from damage caused by settlement, lateral movement, undermining, washout, and other hazards created by earthwork operations.

I. Refer to the “Manual of Accident Prevention in Construction,” published by the Associated General Contractors of America, and to the safety regulations of the appropriate State Agency.

J. Refer to Section 22 05 00 for additional safety requirements.

END OF SECTION 22 05 05

# SECTION 22 05 06

# PLUMBING SUBMITTALS

## PART 1 GENERAL

### 1.01 DESCRIPTION

A. Submittal dates:
   1. Within (14) calendar days after Award of Contract, submit complete materials list of all items proposed to be provided on this Project.
   2. Submit shop drawings within (28) days after Award of Contract.

B. Materials and equipment installed under the Plumbing Contract shall meet all the requirements of the Contract Documents. Do not order or install materials or equipment until submittals are reviewed by the Engineer.

C. Refer to the list at the end of this Section and to the Sections listed in Section 22 05 00, "Common Work Results for Plumbing," Article 1.01, for the items that the Contractor shall submit.

D. Submit complete copies of the catalog data or shop drawings for each manufactured item of equipment and all components to be used in the Work, including the following:
   1. Brand name.
   2. Catalog number.
   3. Specific performance data.
   4. Material description.
   5. Ratings.
   6. Capacity.
   7. Working pressure.
   8. Dimensional data.
   9. Material gauge or thickness.
   10. Wiring diagrams.
   11. General type.

E. Manufacturer's Catalog Sheets, Brochures, Diagrams, Schedules, Performance Charts, Illustrations, and Other Standard Descriptive Product Data: Contractor shall:
   1. Clearly mark or highlight each copy to identify pertinent materials, products, or models.
   2. Show dimensions and clearances required.
   3. Show performance and characteristics and capacities.
   4. Show wiring diagrams and controls.

F. Catalog data for equipment reviewed by the Engineer shall not take precedence over the requirements of the Contract Documents. Review by the Engineer shall not relieve the Contractor from the responsibility for

deviations from Drawings or Specifications, nor from the responsibility for providing proper clearance and coordination with other Contractors.

G. When submitted for review, all shop drawings shall bear the Contractor's signed certification of the following:
   1. Contractor has reviewed, checked, and approved the shop drawings.
   2. Shop drawings have been coordinated with the requirements of the Project and with the provisions of the Contract Documents.
   3. Contractor has verified all field measurements, hands of equipment, and construction criteria, materials, catalog numbers, and similar data.

H. The Engineer's review is **ONLY** for conformance with the design concept of the Project and with the Contract Documents. Contractor shall be solely responsible for construction means, methods, techniques, sequences, procedures, and safety precautions and programs in connection with the Work.

## 1.02 SHOP DRAWINGS

A. Indicate arrangement of component parts, physical dimensions, materials, electrical and mechanical service requirements, colors (where required), controls, accessories, capacities, and performance characteristics.

B. Prior to submitting shop drawings, the Contractor shall stamp and sign its certification that the equipment shown on the submittals meets all the requirements of the Contract Documents. **UNSIGNED COPIES WILL NOT BE REVIEWED.**

C. Submit (8) copies, unless otherwise noted. Approved shop drawings shall be distributed as follows:

| QUANTITY | TO |
|---|---|
| 2 | Architect |
| 1 | Engineer |
| 1 | Construction Manager |
| 1 | Contractor |
| 3 | Operating and Maintenance Manuals |

   1. **NOTE:** At the Contractor's option, shop drawings may be submitted electronically in Portable Document Format (PDF). Contractor shall be responsible for making all copies for distribution and file.

## 1.03 CONTRACTOR RESPONSIBILITIES

A. Completely review Shop Drawings, product data, and samples prior to submission.

B. Determine and verify the following:
   1. Field measurements.
   2. Field construction criteria.
   3. Catalog numbers and similar data.
   4. Conformance with Specifications.
   5. Hand of equipment.

6. Quantities and sizes.

C. Coordinate each submittal with requirements of the Work and the Contract Documents.

D. Notify the Engineer, in writing, at time of submission, of any deviations in the submittals from the requirements of the Contract Documents.

E. Contractor shall make submittals promptly in accordance with the approved schedule, and in such sequence as to cause no delay either in its Work or in the work of any other Contractor.

F. Immediately make any corrections or changes in rejected submittals as required by the Engineer and resubmit until accepted.

G. If the Contractor orders equipment or materials, or begins installation, fabrication, or work prior to return of approved submittals, it shall be "at the Contractor's own risk."

H. When (2) or more items of the same material or equipment are required, they shall be of the same Manufacturer.

I. Incorporate Shop Drawings into the Operating and Maintenance Manuals.

## 1.04 CERTIFICATIONS

A. Provide:
1. Test Agency results verifying capacities, operating conditions, and power requirements at design conditions.
2. Manufacturer's statement of compliance with Standards discussed in individual Specification Sections.
3. Equipment labels indicating Certification requirements.
4. Quality standard designations on each unit piece, e.g., each pipe length, pressure vessel, or valve.
5. Typed verification that noted mixes, chemical compositions, and testing procedures were complied with.
6. Other Certifications listed in other Sections of the Specifications.

## 1.05 REQUIRED SUBMITTAL INFORMATION

A. The items listed below may not be a complete list of required submittals. Submit for approval all items to be provided, whether listed or not.

**KEY FOR REQUIRED SUBMITTALS**

A Catalog Cuts/Shop Drawings (8 copies).
B Operating and Maintenance Manuals (3 copies).
C Color samples (3 each).
D Product samples (2 each).
E Typed statement of material to be furnished.
F Typed verification of compliance with certification requirements.
G Test.

H Coordination Drawings.

(Submit number of copies indicated. If not indicated, submit full quantity of copies previously listed.)

| **PLUMBING SUBMITTALS REQUIRED** | **KEY** |
|---|---|
| Valves | A |
| Hangers | A |
| Pipe-Coding Materials | D-2 |
| Valve-Tagging Materials | D-2 |
| Cleanouts | A |
| Exterior Cleanouts | A |
| Insulation | A |
| Lavatory Trap/Supply Insulation | A |
| Pipe | E-4 |
| Pipe Fittings | E-4 |
| Shock Absorbers | A |
| Trap Primers | A |
| Floor Drains | A |
| Sink Traps | A |
| Roof Drains | A |
| Emergency Roof Drains | A |
| Emergency Storm Drain Discharge Nozzles | A |
| Sinks | A |
| Sink Faucets and Bubblers | A |
| Suppliers and Manufacturers List | E-4 |
| Valve-Tagging Chart | D-2 |
| Certificate of Completion of Water Line Chlorination | F-1 |
| Health Department Certificate | F-1 |
| Lead-Free Solder Certificate | F-1 |
| Operating and Maintenance Manuals (Refer to Section 22 05 07) | B-3 |

END OF SECTION 22 05 06

# SECTION 22 05 07

# PLUMBING OPERATING AND MAINTENANCE MANUALS

## PART 1 GENERAL

### 1.01 RELATED DOCUMENTS

A. Section 01 77 00, "Closeout Procedures."

B. Section 01 78 39, "Project Record Submittals."

C. Section 22 05 60, "Requirements for Completion of Plumbing Work."

### 1.02 DESCRIPTION

A. Compile Operating and Maintenance Manual upon completion of the Work, and as required for final acceptance. Submit draft of Operating and Maintenance Manual to the Engineer for review and approval (90) days before Contract Completion.

B. Submit final corrected Operating and Maintenance Manual (7) days before Contract Completion.

C. Upon approval, provide (3) Operating and Maintenance Manuals.

## PART 2 PRODUCTS

### 2.01 OPERATING AND MAINTENANCE MANUALS

A. The following items, together with any other pertinent data, shall be included in each Operating and Maintenance Manual. This list is not necessarily complete and shall be used only as a guide. Format of manual to be as follows:

1. Operating and Maintenance Manuals shall be loose-leaf, 3-ring, hardcover binders, no larger than 11 in. wide x 12 in. high. Material shall be typewritten or printed, and be fully legible. Each section shall be divided by labeled tabs.
2. Cover:
   a. Title of Project.
   b. Date of Project completion.
   c. Name and address of the Owner.
   d. Date of submittal.
   e. Name and address of the Contractor.
   f. Name and address of the Architect.
   g. Name and address of the Engineer.
3. Second Page: Index.
4. First Section: A copy of each shop drawing and approved submittal with an index at the beginning of the section.
5. Second Section:
   a. A list of all equipment used on the job.

b. Parts list with numbers of replaceable items, including sources of supply.
c. Manufacturers' and nearest Factory Representatives' names and addresses.
d. Model and Serial numbers of components of systems installed.
e. Routine and 24-hour emergency service/repair information:
1) Name, address, and telephone number of servicing agency.
2) Names of personnel to be contacted for service arrangements.

6. Third Section:
a. Description of systems.
b. Manufacturer's literature describing each piece of equipment, including the following:
1) Operating and maintenance instructions.
2) Lubrication instructions.
3) Start-up and shutdown procedures.
4) Routine and emergency servicing instructions.
c. Valve charts.
d. Special wrenches, keys, etc.
e. Copies of all testing and balancing reports.
f. Prints of all system wiring and control diagrams.
g. All certifications and related information.
h. Copies of all written warranties.
i. The Owner's receipt of spare parts. Refer to Section 22 05 60.
j. Copy of the signed and dated letter from the Owner, stating satisfactory completion of instruction, listing names of personnel instructed, and listing names of persons giving the instruction.

B. Refer to Section 01 77 00 and Section 01 78 39 for additional requirements.

## PART 3 EXECUTION

### 3.01 CONTROL DIAGRAM

A. Mount approved copy in a neat frame with backing under glass, or within a plastic jacket, in the Mechanical Room or other area designated by the Architect or Construction Manager.

END OF SECTION 22 05 07

# SECTION 22 05 15

# PLUMBING SLEEVES

## PART 1 GENERAL

### 1.01 RELATED DOCUMENTS

A. Section 01 73 29, “Cutting and Patching.”

B. Section 07 92 00, “Joint Sealants.”

C. Section 22 05 00, “Common Work Results for Plumbing.”

D. Section 22 07 00, “Plumbing Insulation.”

### 1.02 DESCRIPTION

A. Sleeve where piping passes exposed through walls, and where any piping passes through smoke-rated or fire-rated separations, equipment room walls, or above-grade floors.

B. Indicated sizes and locations are based on early Project information and should be verified by the Contractor.

C. Chases and constructed openings that are not indicated on the Drawings shall be provided at the expense of the Contractor requiring the constructed chase or opening.

D. Later, if it becomes necessary to cut into the work because of the failure of the Contractor to notify the General Trades Contractor, then the General Trades Contractor shall do any cutting and patching required later, at the Contractor’s expense.

E. Provide dimensions and locations of openings required in walls for sleeves, piping, and similar items, and deliver sleeves, to the General Trades Contractor, so as not to delay construction.

F. **BEFORE CONSTRUCTION OF MASONRY OR CONCRETE WALLS IS STARTED**, give the General Trades Contractor locations and sizes of all openings required for the installation of equipment or sleeves.

G. If sleeves are not installed due to the fault of the Contractor, holes through masonry or concrete construction shall be core drilled by the General Trades Contractor, at the expense of the Contractor.

H. In Drywall, Masonry, or Concrete Wall Construction:
   1. Furnish sleeves for piping to the General Trades Contractor. General Trades Contractor shall install sleeves where directed by the Contractor.
   2. Option for above ceiling only: General Trades Contractor shall omit block(s) where required for penetrations, and shall provide square-

finished opening. Do not omit blocks in sound barrier walls, under bearing points, or in fire-rated or smoke-rated walls.

3. Coordinate with the Architect and General Trades Contractor.

I. Verify which walls, ceilings, or floors are fire-rated, if any, and provide approved fire-blocking or fire-protective devices as required.

J. Carefully coordinate and check locations of sleeves immediately before and after each concrete pour and masonry installation.

K. Sleeves are not required in floor slabs on grade or in core-drilled openings not requiring water-proofing or firestopping.

L. Sleeving with absolutely watertight seal is required for piping passing through exterior walls above grade, and underground foundation walls and other below-grade penetrations into building.

M. Furnish all piping sleeves, caulking, and escutcheon plates for openings in walls and turn them over to the General Trades Contractor for installation and caulking.

N. General Trades Contractor shall install all sleeves in new walls.

## 1.03 QUALITY ASSURANCE

A. Standards:
1. Factory Mutual Global (FMG).
2. Underwriters Laboratories, Inc. (UL).

# PART 2 PRODUCTS

## 2.01 STANDARD SLEEVES

A. Piping Sleeve Material:
1. Up to 8 in. diameter: Machine-cut Schedule 40 black steel pipe.
2. 8 in. and larger: Schedule 30 black steel pipe.
3. Bare copper piping: Copper sleeves.
4. **(Option)** In non-fire-rated walls: Schedule 40 plastic pipe may be used for piping sleeves, where adjacent ceiling space is used for return air plenum. Refer to Drawings.

B. Sizing: Sleeves shall be large enough for insulation to be continuous, or for watertight or fire-rated sleeve seals to be installed. Size to allow 1/2 in. minimum clearance all around piping or piping insulation.

## 2.02 WATERTIGHT SLEEVE SEALS

A. Oakum Caulking: Thiokol Corp. With lead-pour or elastomeric sealant. Elastomeric sealant shall be 2-component, polysulfide or polyurethane.
1. Other Acceptable Manufacturers: Approved equal by 3M, Calpico, or Hilti.

B. **(Option)** Compression Seals: Thunderline Corp. Linkseal. Stainless steel bolts and nuts. Provide correct size seal, and coordinate with sleeve size.
   1. Other Acceptable Manufacturers: Approved equal by Wayne, Michigan, or Calpico.

C. Provide sleeves with waterstop anchor flange at midpoint where penetrating structure at or below grade.
   1. Acceptable Manufacturers: Calpico, 3M, or Hilti.

## 2.03 FIRE-RATED SLEEVE SEALS

A. ASTM E119 and E814 Silicone RTV foam, UL-approved.
   1. Acceptable Manufacturers: Dow Corning 3-6548, Chase Foam, 3M Fire Barrier caulking or putty, IPC Flamesafe, Carborundum Fibersil, Nelson Fire Stop, BP Fyre Putty, Johns-Manville Cerafiber, KBS Mortar Seal, Hilti Fire Stop, International Protective Coatings Corporation “Flame-Safe,” or CSD Sealing Systems “FSP.”

B. Plastic drain, waste, and vent stacks, and lines penetrating fire-rated floors, ceilings, and walls shall be fire-blocked and waterproofed using ProSet Systems, Inc., Series 45 or 55 couplings and Series 90 Code Red Firestop devices. All other plastic drain openings, such as floor drains, shall be fire-blocked and waterproofed using ProSet Systems C, and E-Z Flex flexible couplings.

# PART 3 EXECUTION

## 3.01 COORDINATION

A. Coordinate location of sleeves, core drilled holes, and other holes required with the General Trades Contractor, equipment, and other Trades.

## 3.02 CUTTING

A. Cut off sleeves through walls flush with each surface.

B. Cut off sleeves 1/8 in. above finished floors and 3 in. above floors in kitchens, utility rooms, equipment rooms, and shafts. Bottom of sleeve shall be cut off flush with surface.

C. Refer to Section 01 73 29 for specific requirements regarding approved cutting methods.

## 3.03 INSTALLATION

A. Piping shall not bear on sleeves. Sleeves shall be installed plumb and true to line, grade, and position.

B. All piping sleeves and escutcheons shall have ample clearance for pipe and covering, and shall have chrome-plated wall and floor escutcheons over the pipe in finished areas. Provide chrome-plated or prime-coated escutcheons in other rooms.

C. Fire Blocking of Penetrations of Fire-Rated Construction:
   1. Use approved, UL-listed, fire-retardant sealants, backing, and packing as required to maintain fire rating of the structure penetrated.
   2. Spray UL-listed foam sealant around exposed piping entering and leaving fire-rated wall or floor structures.
   3. To ensure fire blocking, close space around piping passing through walls and floors. Seal space up to a 1/2 in. gap with sealant or caulking. Close off space greater than a 1/2 in. gap with sheet metal and seal airtight.
   4. For larger openings, provide UL-listed, FMG-approved KBS sealbags as manufactured by International Protective Coatings Corporation.
   5. Pack all fire-rated or sound-rated separation sleeves with glass fiber, high-temperature mineral wool, aluminum-silica fiber, fire-retardant rope, calcium silicate, or other noncombustible material to maintain fire rating of structure, and finish with fire-rated sleeve seals.
   6. Fill space around all sleeves extending into exposed areas with material compatible with adjacent construction and finish.
   7. All openings shall have been UL-tested utilizing the proper rated penetrations to be equal to, or greater than, the barrier assembly in which the penetration occurs.
   8. Install all penetrations and openings in accordance with the Manufacturers' instructions.
   9. The fire-blocking assembly shall maintain the required fire-resistance rating of the wall or floor in which it is placed, and a further sealant shall be applied, if necessary, to attain a smoke-tight condition. Openings without sleeves shall be closed in the same manner.
   10. Refer to Section 07 92 00 for additional requirements.

D. Watertight Seals:
   1. Piping sleeves penetrating outside wall or slabs on grade shall have welded intermediate flange imbedded in masonry. Space around piping shall be clamped, packed, and caulked with lead and oakum to make an absolutely watertight seal within sleeve. Caulk around outside of sleeve.
   2. **Option:** Install compression seals.

E. Unused sleeves shall be plugged, fire-packed, and finished to match adjacent surface.

END OF SECTION 22 05 15

# SECTION 22 05 23

# GENERAL-DUTY VALVES FOR PLUMBING PIPING

## PART 1 GENERAL

### 1.01 RELATED DOCUMENTS

A. Section 22 05 53, “Identification for Plumbing Piping and Equipment.”

### 1.02 DESCRIPTION

A. Provide valves:
   1. As required to facilitate the maintenance, operation, isolation, and servicing of all plumbing piping systems.
   2. In locations accessible to qualified personnel for operation, removal, maintenance, or servicing.
   3. As indicated on the Drawings and as discussed in other Sections of these Specifications.

B. Coordinate valves with structure, and mechanical and electrical equipment.

### 1.03 QUALITY ASSURANCE

A. Standards:
   1. American National Standards Institute (ANSI).
   2. American Society for Testing and Materials (ASTM).
   3. American Society of Mechanical Engineers (ASME).
   4. American Society of Sanitary Engineers (ASSE).
   5. Manufacturer’s Standardization Society of the Valve and Fittings Industry (MSS).

## PART 2 PRODUCTS

### 2.01 MANUFACTURERS AND MODEL NUMBERS

A. Manufacturer and Model Number listed below shall be considered to be the Design Base Manufacturer and Model Number. Other Acceptable Manufacturers will be permitted, unless specifically excluded.

B. All valves of the same type used on the Project shall be by the same Manufacturer.

### 2.02 BALANCING VALVES (2 IN. AND SMALLER)

A. 200 PSIG, ASTM B-62 bronze body/brass ball, threaded or solder joint ends, differential pressure read-out ports, 1/4 in. drain port, memory stop feature to allow valve to be closed for service and reopened to setpoint without disturbing balance position, and calibrated nameplates to ensure specific valve settings.

B. Acceptable Manufacturers: ITT Bell & Gossett CB Series, Flo Pac Model MB, Nibco Fig. 1710, or Taco ACUF Series, or approved equal by Apollo, Hammond, Kitz, Milwaukee, Red-White, or Watts.

## 2.03 CHECK VALVES

A. 2 in. and Smaller: Milwaukee Fig. 509 or 1509. 125 lb. SWP, ASTM B-62 bronze body, swing check, threaded or solder joint tubing ends, with renewable bronze disc and integral seat.

B. 2-1/2 in. and Larger (swing): Milwaukee Fig. F-2974. 125 lb. SWP, iron body, bronze trim, with flanged ends.

C. Other Acceptable Manufacturers: Approved equal by Apollo, Hammond, Kitz, Nibco, Red-White, or Watts.

## 2.04 BALL VALVES (3 IN. AND SMALLER)

A. 150 lb. SWP, bronze body, threaded or solder joint ends, TFE seat and seals, stainless steel ball, blow-out-proof stem, extended handle with vapor seal, adjustable memory stop, and protective sleeve.
   1. **ONLY** Acceptable Manufacturers and Model Numbers: Milwaukee Model BA-100 or BA-150 or approved equal by Watts No. B-6000 or B-6001, Apollo 70-100 or 70-200, Hammond 8501 or 8511, Nibco 580-70 or 585-70, Kitz 68 or 69, or Red-White 5044F or 5049F.

B. With Lockable Handles: 150 lb. SWP, bronze body, threaded ends, TFE seat and seals, stainless steel ball, extended handle with vapor seal, adjustable memory stop, and protective sleeve.
   1. Acceptable Manufacturers and Model Numbers: Milwaukee Model BA-100 LD, Apollo No. 70-100-27, or Nibco 580-70-LH, or approved equal by Hammond, Kitz, Red-White, or Watts.

# PART 3 EXECUTION

## 3.01 INSTALLATION

A. Ball Valves: Install valve on hot and cold water branches serving more than (1) fixture, and in supply lines to any equipment not provided with stops.

B. **DO NOT INSTALL** any valves where the fluid operating pressure exceeds 80% of its pressure rating.

C. Open up valves fully before soldering to piping.

D. During soldering or brazing, remove valve internals and protect the remaining element of sweat end valves against heat damage.

E. **DO NOT INSTALL** solder joint valves on systems where the fluid temperature may soften the solder.

F. **DO NOT USE** iron fittings or pipe on bronze valves without dielectric unions.

G. Tag all valves as required in Section 22 05 53.

## 3.02 TESTS

A. Test all valves for tightness.

B. Test-operate all valves at least once from closed-to-open-to-closed positions while valve is under pressure.

END OF SECTION 22 05 23

# SECTION 22 05 29

# HANGERS AND SUPPORTS FOR PLUMBING PIPING AND EQUIPMENT

## PART 1 GENERAL

### 1.01 RELATED DOCUMENTS

A. Section 22 05 16, “Expansion Fittings and Loops for Plumbing Piping.”

### 1.02 DESCRIPTION

A. Provide support steel, attached to building structure, as necessary, to support piping and smaller plumbing equipment items. Provide supports between structural members, such as steel angles, channels, unistrut, etc., as required, except where specifically called out to be provided by the General Trades Contractor. Obtain prior written approval of the Architect.

B. Refer to Structural and Architectural Drawings and Specifications to determine what supports are provided by the General Trades Contractor.

C. For any variation in supports needed for equipment actually purchased, Contractor shall bear all costs of modifications, including redesign costs.

D. Provide angles, clips, mechanical fasteners, reinforcement steel, drilling of structure, welding to structure, etc. as needed. Means of attachment shall be approved by the Architect and shall not degrade the structure.

E. Provide hangers and supports required for piping and equipment installed under the Plumbing Contract.

F. Provide all necessary inserts, expansion shields, beam clamps, pipe floor supports, and auxiliary steel.

G. Inserts in Masonry and Concrete:
   1. Provide the correct size and type of concrete inserts, along with information on their correct location, to the General Trades Contractor, so as not to delay construction.
   2. New Concrete Installations: Before pouring, the Contractor shall furnish concrete inserts (when used or required) for its Work to the General Trades Contractor, who shall install where directed by the Contractor.
   3. Masonry Construction with Voids: Install appropriately sized all-thread rods within a 2-component polyester resin adhesive used in conjunction with a galvanized metal screen. Install rods in holes drilled with carbide-tipped drill bits.

### 1.03 QUALITY ASSURANCE

A. Standards:
   1. American National Standards Institute (ANSI), including ANSI B31.1, “Code for Power Piping.”

2. American Society for Testing and Materials (ASTM).
3. American Society of Mechanical Engineers (ASME), including ASME B31.9, “Building Services Piping.”
4. Factory Mutual Global (FMG).
5. Manufacturers Standardization Society of the Valve and Fittings Industry (MSS).
6. National Fire Protection Association (NFPA).
7. Underwriters Laboratories, Inc. (UL).

B. All piping supports, parts, and installation shall conform to the latest requirements of ANSI B31.1 and MSS Standard Practice SP-58, SP-69, and SP-89, and not exceed the maximum pipe deflections allowed by ASME B31.9, except as supplemented or modified by the requirements of this Specification.

C. Components shall be selected and matched to the load imposed on them.

## PART 2 PRODUCTS

### 2.01 PIPING HANGERS

A. Uninsulated Piping; steel, cast iron, or plastic; 1/2 in. to 8 in.: Anvil Fig. 69. Galvanized carbon steel, adjustable swivel ring.

B. Insulated Piping:
1. Steel, plastic, or copper; all sizes: Anvil Fig. 260. Adjustable clevis, carbon steel yoke, U-strap, rod, and hex nuts.
2. Cast iron, all sizes: Anvil Fig. 590. Adjustable clevis, carbon steel yoke, U-strap, rod, and hex nuts.
3. Thermal protector: Thermal Pipe Shields Inc. Model T2000. Vapor barrier, galvanized steel sheet metal jacket, and cellular glass thermal insulation (ASTM C552) same thickness as insulation. Insulation dimensions:
   a. Domestic cold water, make-up water, electric water cooler waste, and trap primer drain piping; 1 in. and smaller: 1/2 in. thick minimum, 6 in. long.
   b. Domestic hot water and domestic hot water recirculating piping, 2 in. and smaller: 1 in. thick minimum, 6 in. long.
4. Hanger size shall be sufficient to accommodate pipe and insulation without compressing the insulation.

C. Vertical Piping: Anvil Fig. 261. Friction riser clamp with 2-point bearing. Use Anvil Fig. CT-121 copper-plated riser clamp for copper pipe. Shorten legs as required to conceal riser clamp within pipe chase and still provide adequate support.

D. For Piping Indicated to be Installed “Tight to Ceiling or Wall”:
1. Uninsulated, 1/2 in. to 4 in.: Anvil Fig. 262. Carbon steel. **Option:** Power-Strut channels with Model PS 3126 hold-down clamp, use with rubber cushion for copper pipe.

2. Insulated, 3/4 in. to 8 in.: Anvil Fig. 103. Carbon steel, offset pipe clamp.

E. Acceptable Manufacturers: Anvil International, Inc., B-Line Systems, Inc., Carpenter & Patterson, Inc., Globe Pipe Hanger Products, Inc., Erico/Michigan Hanger Co., Inc., National Pipe Hanger Corp., PHD Manufacturing, Inc., or Klo-Shure.

## 2.02 TRAPEZE HANGERS

A. Unistrut P1000 or Superstrut A1200. Angle iron, or channel of sufficient length to support pipes and insulation on individual hangers, roller supports or saddles with insulation protectors, support capacity, support spacing, trapeze hanger rod diameter, and quantity as required to support total piping load.

B. Design support system and obtain approval of a Structural Engineer licensed in Ohio. Submit details to the Architect for approval.

C. Acceptable Manufacturers: B-Line Systems, Inc., GS Metals Corp., Erico/Michigan Hanger Co., Inc., National Pipe Hanger Corp., Unistrut Corp., Wesanco, Inc., or Powerstrut.

## 2.03 PIPE HANGER RODS, CLAMPS, AND BRACKETS

A. Pipe hanger rods shall be solid steel, threaded ends or all-thread rods of diameter listed below, with double nut attachment to the hanger and at the hanger attachment. Sizes are as follows:

| PIPE SIZES | ROD DIAMETER |
|---|---|
| Up to 2 in. | 3/8 in. |
| 2-1/2 in. and 3 in. | 1/2 in. |

(3/8 in. rods are acceptable for plastic vent lines)

B. Beam Clamps (up to 8 in. diameter pipe):
1. Anvil Fig. 227. Top beam clamp, steel jaw, hook rod with nut, and spring washer steel eye-bolt, with Anvil Fig. 157 for appropriate rod diameter.
2. **Option:** Anvil Fig. 86. Malleable iron clamp, hardened steel cup point set screw with Fig. 89 steel retaining clip. **C-CLAMPS WITHOUT RETAINING CLIPS ARE EXPRESSLY PROHIBITED.**

C. Wall Brackets: Carbon steel, back plates, and bolts.
1. Anvil Fig. 194. Lightweight 750 lb. load.
2. Anvil Fig. 195. Medium-weight 1,500 lb. load.
3. **Option:** Unistrut Superstrut A1200.

D. Acceptable Manufacturers: Anvil International, Inc., B-Line Systems, Inc., Carpenter & Patterson, Inc., Globe Pipe Hanger Products, Inc., Erico/Michigan Hanger Co., Inc., National Pipe Hanger Corp., PHD Manufacturing, Inc., or Klo-Shure.

## 2.04 PIPE-INSULATING SUPPORT

A. Piping 1-1/2 in. and Smaller: Anvil Fig. 167. Provide 12 in. long, 18 ga. sheet metal half round piping shield inside clevis hanger.
   1. Acceptable Manufacturers: Buckaroos, Inc., Carpenter & Patterson, Inc., PHS Industries, Inc., Pipe Shields, Inc., Rilco Manufacturing Co., Inc., or Value Engineered Products, Inc.

B. Piping 2 in. and Larger: Pre-compressed fiberglass load-bearing segment, integral fire-retardant vapor barrier jacket and saddle.
   1. Acceptable Manufacturers: Insul-Coustic Co. Insul-Shield, Pipe Shield, Inc., or Buckaroos, Inc.

## 2.05 HANGER COVERS

A. Buckaroos, Inc., Wraparoos. 2-piece PVC cover, includes 18 in. long PVC hanger rod cover. Snap-on design, adhesive seals, to 205 deg. F. temperature, available in multiple colors.

B. Other Acceptable Manufacturers: Equal by Pipe Shields, Inc., or PHS Industries.

## 2.06 STRUCTURAL STEEL

A. Provide ASTM A36 / ASTM A36M, black and galvanized, steel plates, shapes, and bars, steel beams, unistrut, standard-weight black steel pipe, or steel angle of adequate size and strength to safely carry the weight of equipment item.

## 2.07 FINISH

A. Unless otherwise noted, all steel hangers and supports shall be standard black. **Exception:** Hangers and supports for exposed exterior applications shall be galvanized.

## 2.08 CONCRETE INSERTS

A. In Poured Concrete: Anvil Fig. 282. Malleable iron, universal mounting, lateral adjusting.

B. Acceptable Manufacturers: Anvil International, Inc., B-Line Systems, Inc., Carpenter & Patterson, Inc., Globe Pipe Hanger Products, Inc., Erico/Michigan Hanger Co., Inc., National Pipe Hanger Corp., PHD Manufacturing, Inc., or Klo-Shure.

C. Refer to Manufacturer's recommendations for correct selection as to pipe size and loading. Confirm with the General Trades Contractor that the concrete used is of a sufficient strength to hold the insert. Use inserts.

## PART 3 EXECUTION

### 3.01 INSTALLATION — PIPING HANGERS AND SUPPORTS

A. Install all necessary pipe hangers, supports, clamps, wall brackets, and attachments as required:
   1. To properly support piping from building structure.
   2. To allow controlled thermal movement of piping systems.
   3. To facilitate action of expansion joints, loops, and bends, where used.
   4. To provide slope where indicated.

B. Provide pipe guides and anchors as required to properly control pipe movement. Method shall suit job conditions. Refer to Section 22 05 16.

C. Install hangers and supports with all necessary inserts, bolts, rods, nuts, washers, and other accessories, according to Manufacturer's recommendations. Hangers shall be double-nutted.

D. **DO NOT USE POWDER-ACTUATED ANCHORS OR FASTENERS.**

E. **DO NOT USE C-CLAMPS WITHOUT RETAINING CLIPS.**

F. Use a separate hanger for each pipe. Do not hang one pipe from another.

G. Provide additional supports as necessary to maintain piping alignment.

H. Spacing of Piping Supports
   1. Maximum spacing of piping supports shall be as follows:

| PIPE SIZE | STEEL PIPE | COPPER PIPE |
|---|---|---|
| 3/4 in. or smaller | 6 ft. | 5 ft. |
| 1 in. | 6 ft. | 6 ft. |
| 1-1/4 in. | 6 ft. | 6 ft. |
| 1-1/2 in. | 6 ft. | 8 ft. |
| 2 in. | 10 ft. | 8 ft. |
| 2-1/2 in. | 10 ft. | 9 ft. |
| 3 in. | 10 ft. | 10 ft. |

   2. Cast iron: 5 ft. maximum spacing (10 ft. spacing permitted where 10 ft. pipe lengths are installed) behind every hub, at branch connections, and at each change of direction.

I. Support piping near elbows, such that the total cantilevered length for both sides of the elbow does not exceed 3 ft.

J. Provide proper angles or channels between structural members for hanger supports where necessary. Weld to steel structural members. Consult with the Architect regarding this procedure.

K. Trapeze Hangers:
   1. At the Contractor's option, trapeze hangers may be used where parallel runs of pipe occur.
   2. All rods on trapeze hangers shall be 1/2 in. minimum.

3. Clamp each pipe individually.
4. Provide individual U-bolt clamps for insulated pipes.
5. Clamp size shall accommodate insulation and shield.
6. Provide individual piping attachment to each Unistrut hanger, angle, or channel.

L. Support vertical risers at the floor with friction riser pipe clamps.

M. Rest vertical storm and waste stacks firmly on masonry footings and support them firmly at each floor.

N. Do not support hangers from roof deck or floor above. Span from structural members with supplementary steel where direct attachment to structural members is not practical.

O. Ceilings:
1. Do not support plumbing lines, or any other utility lines, from ceiling and ceiling grid systems.
2. Piping, and each ceiling and ceiling grid system, shall be a separate installation. Independently support each from the building structure.
3. Where interferences occur, in order to support piping, install trapeze-type hangers or supports. Locate them where they do not interfere with access to valves and other plumbing equipment items.

P. Use top flange beam clamps to avoid burning metal deck.

Q. Piping Insulation:
1. Adjust pipe hangers to proper elevation and install all hanger rods in a plumb position before pipe insulation is installed.
2. Whenever insulated pipe is supported by hangers, size hangers for outer diameter of insulation so that hangers pass freely around the insulation.
3. Protect the insulation where hangers contact pipe with saddles or protection shields.
4. Provide hanger covers to cover and protect steel clevis type pipe insulation hangers and shields from insects, bacteria, moisture, dust, and dirt in food processing areas.

R. Painting:
1. Touch-up:
   a. Clean field welds, bolted connections, and abraded areas of all shop paint.
   b. Paint exposed areas immediately after erecting hangers and supports.
   c. Use same paint materials as used for shop painting.
   d. Apply paint by brush or spray to provide a minimum dry film thickness of 2.0 mils.
2. Galvanized surfaces: Clean and apply galvanizing repair paint to comply with ASTM A780.

## 3.02 INSTALLATION — CONCRETE

A. Avoid cutting concrete or masonry by using inserts.

END OF SECTION 22 05 29

# SECTION 22 05 53

# IDENTIFICATION FOR PLUMBING PIPING AND EQUIPMENT

## PART 1 GENERAL

### 1.01 DESCRIPTION

A. Identify by labels and tags the following items:
   1. Equipment: Install nameplates for the following:
      a. Equipment such as domestic water heaters, domestic hot water recirculating pump, control cabinets, and similar items.
      b. All shock absorbers, whether accessible or not.
      c. Trap primers, including description of what floor drains are served.
   2. Piping exposed in equipment rooms, trenches, crawl spaces, tunnels, accessible service areas, or accessible chases; piping running above accessible ceiling construction.
   3. All plumbing valves, including control valves. **Exception:** Valves or stops serving only (1) plumbing fixture need not be tagged.

## PART 2 PRODUCTS

### 2.01 EQUIPMENT IDENTIFICATION

A. Engraved aluminum nameplates, sized for 3/4 in. high letters or numbers, Gothic style.

B. Acceptable Manufacturers: Seton “Setmark” or approved equal by Brady, MSI, Calpico, or Sun-Line.

### 2.02 PIPING IDENTIFICATION

A. 2 in. wide, painted gloss enamel or vinyl tape color band. Where required, second color band shall be 1 in. wide and centered over first color band. Stencils or adhesive-backed plastic markers, same color as 2 in. band.

B. Letter size shall be as follows:

| **Overall Pipe/Insulation Size** | **Minimum Letter Height** |
|---|---|
| Up to 1-1/4 in. diameter | 1/2 in. high |
| 1-1/2 in. to 2 in. diameter | 3/4 in. high |
| 2-1/2 in. to 6 in. diameter | 1-1/4 in. high |

C. Acceptable Manufacturers: Seton “Setmark” or approved equal by Brady, MSI, Calpico, or Sun-Line.

## 2.03 PIPING IDENTIFICATION SCHEDULE

A. Identify piping as follows:

| Type of Service | 2 in. Band Color | 1 in. Band Color | Designation |
|---|---|---|---|
| Domestic Cold Water | Green | — | DCW |
| Domestic Hot Water (109 deg. F.) | Orange | — | DHW-109 |
| Domestic Hot Water (120 deg. F.) | Orange | — | DHW-120 |
| Domestic Hot Water Return | Orange | Brown | DHWR |
| Storm | Brown | Light Blue | STM |
| Sanitary | Brown | White | SAN |
| Sanitary Vent | Brown | Orange | V |

## 2.04 VALVE IDENTIFICATION

A. 2 in. diameter, 19 ga., brass tag with brass jack chain. 1/4 in. high stamped letters over 1/2 in. high stamped numbers, both black-filled.

B. Acceptable Manufacturers: Seton, Brady, MSI, Calpico, Sun-Line.

## 2.05 VALVE IDENTIFICATION SCHEDULE

A. Identify valves as follows:

| Type of Service | Valve Tag Designation |
|---|---|
| Domestic Cold Water | DCW |
| Domestic Hot Water (109 deg F.) | DHW-109 |
| Domestic Hot Water (120 deg. F.) | DHW-120 |
| Domestic Hot Water Return (109 deg F.) | DHWR-109 |
| Domestic Hot Water Return (120 deg. F.) | DHWR-120 |

# PART 3 EXECUTION

## 3.01 COORDINATION

A. Coordinate to ensure that the identification used by all Trades is uniform in type, style, and appearance.

B. Equipment: Coordinate the exact nomenclature to be used on nameplates with the Construction Manager and Architect.

C. Piping: Coordinate with the Construction Manager for identification system, and refer to Identification Schedule.

D. Valves: Coordinate with the Construction Manager for valve-tagging system, and refer to Identification Schedule.

## 3.02 INSTALLATION

A. Equipment: Attach nameplates with stainless steel screws. **Exception:** Use compatible adhesive where screws might damage equipment.

B. Piping:
   1. Apply piping identification only after any finish painting is completed.
   2. Provide service designation, color banding, stencils, and flow arrows for piping and contents identification at **MAXIMUM 25 FT.** intervals.
   3. Also identify piping at connections to equipment, at valves, at branches from main, and at each riser.
   4. Where a pipe passes through a wall, apply a service label on the pipe where it enters and exits the wall.
   5. Apply stencil over background, in colors as indicated above, and varnish over when dry. Stencils shall be readable from a standing position.

C. Valves:
   1. Provide valve tags. Tags shall be stamped with service designation and numbered consecutively for each system. Attach tags to valves in such a manner that valve shall be operable without removing or damaging tag, or attach tags as directed by the Architect. Tags shall be readable from a standing position when valve is in normal position. Add valve tag numbers to Record Drawings.
   2. Prepare a valve tag directory with charts showing locations, designations, and sizes of valves. Laminate under plastic and mount as directed by the Architect or Construction Manager. Include additional copies of valve charts in the Operating and Maintenance Manuals.

END OF SECTION 22 05 53

# SECTION 22 05 60

# REQUIREMENTS FOR COMPLETION OF PLUMBING WORK

## PART 1 GENERAL

### 1.01 RELATED DOCUMENTS

A. Section 01 77 00, “Closeout Procedures.”

B. Section 22 05 00, “Common Work Results for Plumbing.”

C. Section 22 05 05, “Plumbing Excavation and Backfill.”

D. Section 22 05 06, “Plumbing Submittals.”

E. Section 22 05 07, “Plumbing Operating and Maintenance Manuals.”

F. Section 22 05 53, “Identification for Plumbing Piping and Equipment.”

### 1.02 DESCRIPTION

A. Complete and submit the following list, which is a partial list of the items required prior to Contract Completion:
   1. Submittals. Refer to Section 22 05 06.
   2. Operational tests, adjustments, and inspections of all equipment and systems, and report of final test of all special systems, as required in this, as well as other, Sections. Refer to Section 22 05 00.
   3. Protection and cleaning. Refer to Section 22 05 00.
   4. Operating and Maintenance Manuals. Refer to Section 22 05 07.
   5. Record Drawings. Refer to Section 22 05 00.
   6. Painting. Refer to Section 22 05 00.
   7. Equipment warranties.
   8. Guarantee. Refer to Section 22 05 00.
   9. Equipment and piping identification; valve tagging. Refer to Section 22 05 53.
   10. Instruction of the Owner’s personnel as required in this, as well as other, Sections.
   11. Spare parts as required in this, as well as other, Sections.

B. Provide or perform all of the above items before Contract Completion.

## PART 2 PRODUCTS

### 2.01 SPARE PARTS

A. Provide a receipt, signed by the Owner, for all spare parts and insert it in the Operating and Maintenance Manuals.

B. Furnish (1) complete set of the following spare parts for the Owner’s use after the guarantee period expires:
   1. Gaskets for each piece of equipment that requires gaskets.

2. Special keys, wrenches, and similar items required, or special tools.
3. Any other parts mentioned elsewhere.

## PART 3 EXECUTION

### 3.01 FINAL OPERATING TESTS AND PROCEDURES

A. Prior to Contract completion, conduct system operational tests for a period of at least (5) days, not necessarily consecutive, as scheduled by the Construction Manager, to demonstrate fulfillment of the requirements of the Contract. During this time, adjust equipment so that it will perform as the Manufacturer intended, and so that systems will function as designed.

B. Operate each system in every mode of operation, and check the position of valves, switches, and other devices for proper closure, operation, and switching.

### 3.02 INSTRUCTION OF OWNER'S PERSONNEL

A. Provide in-service training for the system's operators.

B. Provide all applicable user manuals and related training documentation.

C. Provide training schedule and training outline for approval (45) days prior to Contract Completion.

D. After all system operational tests have been completed, schedule an instruction period with the Construction Manager. Schedule well in advance, so that all of the Owner's personnel may attend if they desire. Coordinate with the Construction Manager and Architect for date and time of training sessions.

E. Participate in training sessions. Instruct the Owner's personnel in the operation and maintenance of all systems and equipment. Use Operating and Maintenance Manuals to familiarize the Owner's personnel with equipment and procedures. Allow time as necessary for this instruction.

F. Record a video of all Owner training, instructions, and equipment start-up demonstrations on a digital video disc (DVD). Turn over a copy of the DVD to the Construction Manager.

G. Instruction shall include the following:
   1. Location of equipment and explanation of what it does (function).
   2. Reference to operating instruction manuals for record and clarity.
   3. Coordination of written and verbal instructions, so that the operation of each system is fully understood by operating personnel.
   4. Complete review of items contained in Operating and Maintenance Manuals.
   5. Discussion of maintenance procedures that must be followed by the Owner.
   6. Complete demonstration and explanation of each System.

H. Provide a copy of OFCC Form No. F390-03, “Certification of Equipment Demonstration,” signed by the Construction Manager, to the Architect. Insert copies in each Operating and Maintenance Manual.

## 3.03 FOLLOW-UP INSPECTIONS

A. A minimum of (1) month before the end of the guarantee period, contact the Architect and Construction Manager to discuss system operation, and to plan for the future care and maintenance of the system.

B. (1) month before the end of the guarantee period, contact the Construction Manager and perform an inspection to review any items needing correction.

C. Refer to Section 22 05 05 for additional inspection requirements related to excavation and backfill.

## 3.04 PUNCH LIST PROCEDURE

A. Refer to Section 01 77 00.

END OF SECTION 22 05 60

# SECTION 22 05 76

# FACILITY DRAINAGE PIPING CLEANOUTS

## PART 1 GENERAL

### 1.01 RELATED DOCUMENTS

A. Section 22 13 16, “Sanitary Waste and Vent Piping.”

B. Section 22 13 23, “Sanitary Waste Interceptors.”

C. Section 22 14 00, “Facility Storm Drainage.”

### 1.02 DESCRIPTION

A. Provide cleanouts as shown on the Drawings.

### 1.03 QUALITY ASSURANCE

A. Standard: American National Standards Institute (ANSI).

## PART 2 PRODUCTS

### 2.01 CLEANOUTS

A. All cleanouts shall be line size (6 in. size on 6 in. or larger line).

B. Provide membrane clamps on all cleanouts in floors having waterproofing membrane.

C. Floor Cleanouts (F.C.O.): Each floor cleanout shall have an ANSI load rating indicated on shop drawings. If rating is not indicated on shop drawings, they will be rejected. Each floor cleanout that is required to have a vandal-resistant top shall have at least (4) screws for attachment to top.

1. Floors with vinyl tile finish: Mifab #C1100-XS-34. Adjustable cast iron body, heavy-duty load rating, vandal-resistant, square, stainless steel cover, ABS plastic plug, line size, and caulk or push-on outlet.
2. Bare concrete floors: Mifab #C1100-XS-3. Adjustable cast iron body, heavy-duty load rating, vandal-resistant stainless steel scoriated cover, threaded ABS plastic plug, line size, and caulk or push-on outlet.

D. Wall Cleanouts (W.C.O.): Mifab #C1400-RD-6. Round polished stainless steel access cover, and vandal-resistant screw.

E. Exterior Cleanouts: Mifab #C1100-XS-3. Adjustable cast iron body, heavy-duty load rating, vandal-resistant stainless steel scoriated cover, threaded ABS plastic plug, line size, and caulk or push-on outlet.

F. Acceptable Manufacturers: J. R. Smith, Josam, Wade, Watts, Zurn, or Mifab.

## PART 3 EXECUTION

### 3.01 INSTALLATION

A. Install top of cleanouts flush and level with wall and finished floor. If not shown on Architectural Drawings, confirm elevation and proper pitch to cleanouts with the Architect before roughing in. **REMOVE AND REPLACE ALL ITEMS NOT INSTALLED AT PROPER ALIGNMENT, PROPER ELEVATION, FLUSH, AND LEVEL, AT NO COST TO THE OWNER.**

B. Use graphite on all cleanout plug threads.

C. Install duct tape over floor cleanout covers to provide protection from scratching and collection of dirt and debris during construction. Remove tape just prior to final inspection.

D. Install cleanouts in accessible locations.

E. Where tile is to be installed, adjust top of cleanout to be flush with the finished surface.

F. Install exterior cleanouts in center of 18 in. square concrete slab, 6 in. thick. Install cleanout and slab flush with finished grade or pavement. General Trades Contractor shall provide concrete slab. Edges shall be mitered.

END OF SECTION 22 05 76

# SECTION 22 07 00

# PLUMBING INSULATION

## PART 1 GENERAL

### 1.01 RELATED DOCUMENTS

A. Section 22 05 29, "Hangers and Supports for Plumbing Piping and Equipment."

### 1.02 DESCRIPTION

A. Provide insulation for new piping.

B. Insulate the following items:
   1. Domestic cold water supply, domestic hot water supply and domestic hot water return piping, regardless of length or location.
   2. Domestic water supply and waste pipe under all sink fixtures accessible to the handicapped. This includes non-ADA fixtures that a wheelchair might access.
   3. Above-ground floor drain traps having trap primers, and first 3 ft. of piping.
   4. Above-ground trap primer drain lines.
   5. Above-ground storm piping (both horizontal and vertical), roof sump, and roof drain bodies.

C. All exposed insulated piping and fittings, from floor up to 7 ft.-6 in. above floor, shall have a PVC cover applied over pipe insulation and solvent welded together. Material shall be same as PVC fitting covers. (This requirement does not apply to Mechanical Rooms.)

D. Attach labels to all piping insulation every 50 ft. stating "NON-ASBESTOS CONTAINING."

### 1.03 DEFINITIONS:

A. "Concealed" insulation: Either embedded in masonry or other construction, or installed above ceilings, below floor slab, behind wall furring, in trenches, or within chases, soffits, walls, or double partitions.

B. "Exposed" insulation: In full or partial view; not "Concealed" as defined above.

### 1.04 QUALITY ASSURANCE

A. Standards:
   1. American Society for Testing and Materials (ASTM) E-84.
   2. National Fire Protection Association (NFPA): 2006 NFPA 255, "Standard Method of Test of Surface Burning Characteristics of Building Materials."
   3. Underwriters Laboratories (UL).

4. Americans with Disabilities Act (ADA).
5. International Building Code (IBC).
6. International Association of Plumbing and Mechanical Officials (IAPMO).
7. American Society of Heating, Refrigerating, and Air Conditioning Engineers (ASHRAE): ASHRAE/IESNA 90.1-2004, including "Minimum Pipe Insulation Thickness" Table.
8. Illuminating Engineering Society of North America (IESNA).

B. Insulation shall be in accordance with the State Mechanical Code. Domestic hot water piping insulation shall provide a maximum allowable heat loss of 35 BTUH per sq. ft. of pipe surface area for above-ground piping.

C. Fire and Smoke Hazard Ratings: Insulation and related components, such as coverings, coatings, tapes, and cloths, shall not exceed 25 Flame Spread, 50 Smoke Developed, and 50 Fuel Contributed on above ground insulation, according to ASTM E-84 test and NFPA 255.

D. Installation shall be done by Tradesmen specializing in insulation work in strict accordance with Manufacturer's recommendations.

## 1.05 DELIVERY, STORAGE, AND HANDLING

A. Protection: Leave insulation boxed and stored until time for use. Elevate and cover material to avoid moisture contamination and physical abuse.

# PART 2 PRODUCTS

## 2.01 MANUFACTURERS AND MODEL NUMBERS

A. Manufacturer and Model Number listed below shall be considered to be the Design Base Manufacturer and Model Number.

B. Other Acceptable Manufacturers will be permitted, unless specifically excluded.

## 2.02 PIPE INSULATION

A. Indoor Piping: Owens Corning Fiberglas 25 ASJ/SSL/II. 1-piece, heavy-duty, fiberglass insulation with all-purpose vapor barrier jacket of white kraft bonded to aluminum foil and reinforced with fiberglass yarn, longitudinal pressure-sensitive tape for sealing of lap joint, 0 deg. F. to 800 deg. F. temperature rating. Insulation thicknesses:
   1. Domestic cold water, make-up water, electric water cooler waste trap, and trap primer drain lines:
      a. 1 in. and smaller: 1/2 in. thick, minimum.
      b. 1-1/4 in. and larger: 1 in. thick, minimum.
      c. **Option:** 3/4 in. thick fire-rated Armaflex may be used in walls (not in chases).
   2. Domestic hot water and domestic hot water recirculating piping:
      a. 2 in. and smaller: 1 in. thick, minimum.

b. 2-1/2 in. and larger: 1-1/2 in. thick, minimum.

3. Above-ground drains, floor drains with trap primers, and storm piping: 1 in. thick, minimum.
4. Other Acceptable Manufacturers: Approved equal by Schuller, Certainteed, Armstrong, Rubatex, Imcoa, Manson, or Knauf.

B. In-Wall Domestic Hot Water Piping : Closed cell, foamed plastic, tubular, 1/2 in. minimum wall thickness, fire-rated, 220 deg. F. temperature rating. Pipe and joints shall be sealed with Manufacturer's approved adhesive.
1. Acceptable Manufacturers: Armstrong fire-rated "Armaflex," Rubatex, or Imcoa, or approved equal by Schuller, Certainteed, Manson, or Knauf.
2. **Option:** Indoor pipe insulation, listed in Paragraph A above, may be used in walls.

C. Pipe Fittings Insulation: Owens Corning TIW-1. Wrapped 1 lb. density fiberglass blanket with reinforced foil and kraft vapor barrier facing or molded fiberglass segments with pre-molded, 1-piece PVC plastic covers. Wrapped fiberglass blanket shall be installed to same thickness as pipe insulation.
1. Other Acceptable Manufacturers: Approved equal by Schuller, Certainteed, Armstrong, Rubatex, Imcoa, Manson, or Knauf.

D. Pipe Fittings Insulation Covers: Pre-molded, 1-piece PVC plastic covers, with maximum 25 Flame Spread and 50 Smoke Developed ratings. Shall be listed and certified for installation in ceiling plenum spaces.
1. Acceptable Manufacturers: Ceelco, Zeston, Johns Manville, Knauf, Speedline, or Proco.

## 2.03 PVC JACKET OVER PIPE INSULATION

A. PVC jacket, 1-piece, solvent weld joints.

B. Acceptable Manufacturers: Ceelco, Zeston, Johns Manville, Knauf, Speedline, or Proco.

## 2.04 PIPE-INSULATING SUPPORT

A. Refer to Section 22 05 29.

## 2.05 MASTICS, ADHESIVES, SEALANTS, AND FINISHES

A. Mastics, adhesives, sealants, and finishes shall be approved for their intended use by the Insulation Manufacturers.

B. Acceptable Manufacturers: Benjamin-Foster, Vimasco, ICC, or Aerobol.

C. Vegetable or wheat paste is prohibited.

# PART 3 EXECUTION

## 3.01 COORDINATION

A. Coordinate installation of insulation with pressure testing of piping.

## 3.02 INSTALLATION — PIPING INSULATION

A. Do not use damaged or water-soaked insulation.

B. Insulate piping where concealed in walls or chases.

C. Insulate piping located in walls with 1/2 in. thick fire-rated foam insulation, or indoor pipe insulation, as specified above.

D. Insulate any pipe hanger or pipe support that has direct contact with any hot or cold piping, or any item that is subject to sweating.

E. Do not install foam insulation in air handling plenum spaces.

F. Insulation shall be continuous through sleeves and hangers and through walls where no sleeves are required.

G. Leave no “raw” ends on insulation. Bevel insulation terminations, seal with insulating cement or mastic, and cover ends same as pipe insulation covering. PVC caps over straight-cut ends that have been vapor-sealed may be used in lieu of beveling.

H. Exposed insulation shall be finished smooth, sized if required, and left ready for painting.

I. Piping shall be pressure-tested and accepted before piping insulation is installed.

J. Install plenum-rated PVC plastic fitting covers in all air handling ceiling plenum spaces, and on all piping fittings.

K. Install insulating saddles of non-compressible insulation with a continuous vapor barrier on pipes 2 in. and larger during the period that the insulation is being applied. Install 12 in. long, 18 ga. half round shields inside clevis pipe hangers at all hangers (regardless of size), unless insulating-type hangers are furnished by the pipe installer. Verify method to be used.

L. Install insulation shields at the time insulation is hung, to avoid insulation damage.

M. Set all hangers perpendicular before any insulation is applied. Do not apply insulation to cold water piping until insulation saddles are in place at each pipe hanger.

N. Make application on clean, dry pipes and tanks, with all joints butted firmly together.

O. Complete installation of insulation and sealing shall be in strict accordance with the Manufacturer’s recommendations.

P. Contractor shall replace all damaged insulation at its own expense.

Q. Maintain continuity of all insulation. No voids in insulation or vapor barrier will be permitted.

## 3.03 INSTALLATION — PIPE FITTINGS INSULATION

A. Unless otherwise noted, insulate valves and flanges for all services. Insulate all couplings. Insulator shall verify during bidding the extent of these connections and prepare its bid accordingly.

B. Fittings shall be insulated with factory-formed mitered sections of pipe insulation or 1 lb. density fiberglass blanket insulation wrapped under compression to full thickness of the pipe insulation. Mitered sections and blanket insulation shall be secured with double wrapping of tape over the entire fitting. Vapor barrier mastic shall be applied on concealed fittings to maintain vapor barrier. Cover with molded PVC plastic cover.

C. Do not cover unions and flanges initially. Bevel insulation and apply cement to ends. Then add insulation over these items, so that it can be removed without disturbing adjacent pipe insulation. Cover with molded PVC plastic cover.

D. Unions, flanges, valve bonnets, and fittings shall be wrapped with oversized pipe insulation to provide the same insulation thickness as pipe insulation. Oversized insulation sections shall be used to form a collar between the (2) insulation sections with blanket insulation used to fill the gaps. Cover with PVC jacket.

## 3.04 INSTALLATION — PIPE JACKET COVERS

A. In addition to insulation jacketing and fitting covers specified above, install PVC jacket over all exposed insulation below 7 ft.-6 in. above floor. Jacket shall have overlapping joints and shall be sealed with suitable adhesive. Butt joints shall be sealed with matching 3 in. wide all-service jacket (ASJ) pressure-sensitive tape. (This requirement does not apply to Mechanical Rooms.)

END OF SECTION 22 07 00

# SECTION 22 10 00

# PLUMBING PIPING AND PUMPS

## PART 1 GENERAL

### 1.01 RELATED DOCUMENTS

A. Section 22 05 23, “General-Duty Valves for Plumbing Piping.”

B. Section 22 05 29, “Hangers and Supports for Plumbing Piping and Equipment.”

C. Section 22 05 53, “Identification for Plumbing Piping and Equipment.”

D. Section 22 07 00, “Plumbing Insulation.”

E. Section 22 11 16, “Domestic Water Piping.”

F. Section 22 11 19, “Domestic Water Piping Specialties.”

G. Section 22 13 16, “Sanitary Waste and Vent Piping.”

H. Section 22 14 00, “Facility Storm Drainage.”

### 1.02 DESCRIPTION

A. Provide piping, valves, and specialties as shown or required to completely install all plumbing systems on this Project, including the following:
   1. Domestic water (refer to Section 22 11 16); for specialties, refer to Section 22 11 19.
   2. Sanitary (refer to Section 22 13 16).
   3. Storm (refer to Section 22 14 00).

B. For valves, refer to Section 22 05 23.

### 1.03 QUALITY ASSURANCE

A. Standards:
   1. American National Standards Institute (ANSI) B31.1, “Code for Power Piping.”
   2. American Society for Testing and Materials (ASTM).
   3. American Society of Mechanical Engineers (ASME), including Boiler and Pressure Vessel Code, Section IX, “Qualification Standard for Welding and Brazing Procedures, Welders, Brazers, and Welding and Brazing Operators.”
   4. American Welding Society (AWS).
   5. National Fire Protection Association (NFPA): 2011 NFPA 70, “National Electrical Code® (NEC),” Articles 110 and 408.
   6. Ohio Administrative Code (OAC) 4101:1: 2011 Ohio Building Code.

## PART 2 PRODUCTS

### 2.01 JOINTS, UNIONS, AND CONNECTIONS

A. Copper Pipe Unions: Bronze 150 lb. ground joint, solder end. (Do not use wrought copper unions.)
   1. Acceptable Manufacturers: Epco, Rockwell, Mueller, Chase, Crane, Dart, Flagg, or Nibco.

B. Steel Pipe Unions: Black malleable iron, 250 lb. bronze ground ball joint.
   1. Acceptable Manufacturers: Mueller, Chase, Crane, Epco, Fairbanks, Grinnell, or Stockham.

C. Dielectric Unions: Material shall be compatible for the type of service.
   1. Acceptable Manufacturers: Epco, Capitol, Dart, Watts, or Vogt.

D. Threaded Piping Joints:
   1. Use NPT tapered threads. (ASME B1.20.1.)
   2. Joints shall be made with TFE tape, applied to male thread only.
   3. **Option:** Use Permatex pipe dope.

E. Flanged Joints: Cast iron or cast bronze, 125 lb. or higher as required
   1. Acceptable Manufacturers for dielectric flange and bolt isolators: Capitol, Crane, Dart, Epco, or Vogt.

F. Gaskets: Nonmetallic. 1/8 in. minimum thickness, fibrous type with double coat of graphite, asbestos-free, ASME B16.21, except use Type 304 stainless steel with carbon steel guide on high temperature piping systems.

G. Roll Grooved Couplings and Fittings:
   1. If grooved piping system is used, the Installing Contractor shall have had prior experience installing at least (5) grooved mechanical piping systems.
   2. Grooved couplings may be installed on 2 in. to 8 in. roll grooved standard weight pipe.
      a. Install copper tubing in accordance with Coupling Manufacturer's instructions.
      b. Install rigid couplings with 300 psi pressure rating and 180 deg. F. rating:
         1) Victaulic Style 607 (slant bolt pad) with bolt pads metal-to-metal.
         2) Tyco-Grinnell Figure 672 with even-gap bolt pads.
         3) Anvil-Gruvlok Figure 6400 with even-gap bolt pads.
      c. Pre-lubricated, EPDM gasket, Grade EHP material, rated for maximum 250 deg. F. Gaskets used on potable water systems shall be UL-classified in accordance with ANSI/NSF 61.
         1) Gruvlok gaskets NSF 61 approved **ONLY** for cold water, up to 86 deg. F., and shall be lubricated, inside and out, with Gruvlok Xtreme Lubricant in any copper application.
      d. **ALL OTHER TYPES OF ROLL GROOVED COUPLINGS ARE NOT ACCEPTABLE.**

3. Victaulic Option: Installing Contractor may use a ductile iron bolted branch outlet with locating collar, Grade E pressure-responsive gasket seal, and carbon steel bolts and nuts.
4. Grooved valves and accessories are acceptable.
5. Refer to Article 3.01 CC. 3. for additional Manufacturer's requirements regarding on-site participation in Contractor training and periodic inspections of the work.
6. Acceptable Manufacturers: Victaulic Manufacturing Co., Tyco-Grinnell, or Anvil-Gruvlok.

H. Bolts and Other Hardware:
1. Bolts for steel, cast iron, brass, and bronze, for 250 lb. SWP, and for 450 deg. F. or below: Carbon steel, with American Standard regular, square heads and American Standard heavy-hexagon, semi-finished nuts.
2. Where equipment is installed outside, all hardware and bolts shall be stainless steel.
3. ASME B18.21, Tee-head, high tensile steel bolts and nuts may be used in mechanical joint pipelines.

I. Filler Materials:
1. Solder: Shall meet ASTM B32. Alloy Sn94 and Sn95 shall be used.
2. Brazing: Shall meet AWS A5.8.
3. Welding: Shall comply with AWS D10.12.

## 2.02 FITTINGS

A. Nipples: Same weight and material as pipe with which they are used, except shoulder nipples shall be extra-heavy. Short nipples are not allowed.

## 2.03 ROOF BOOTS

A. Portals plus Quadrascal or Pipe Boot. Molded 1/16 in. thick EDPM roof boot, ozone-resistant, ultraviolet-resistant, with 3 in. base flange, conically shaped, watertight.

B. Furnish roof boots, and verify type with the General Trades Contractor before ordering. Final roof boot selection shall be fully compatible with roof construction system.

# PART 3 EXECUTION

## 3.01 INSTALLATION

A. The following instructions apply to all piping systems, except where otherwise noted.

B. Piping Drawings are schematic. Carefully coordinate final locations.

C. Contractor shall provide information on chases, sleeves, and openings required for its Work to other Contractors.

D. Coordinate pipe runs and elevations with other Contractors before installation.

E. Coordinate piping with trusses, beams, crane, crane rails, joists, foundation, piers, walls, other piping, ductwork, equipment, and electrical equipment, cable trays, lighting, wiring, and conduit.

F. Arrange all piping in accordance with the best standards of the Trade, with vertical lines plumb, and horizontal runs parallel or perpendicular to the building walls.

G. Install piping parallel to building walls, except where specifically shown otherwise.

H. Keep piping level, except where a slope is required.

I. Use eccentric reducers to keep top of pipe level.

J. Sanitary and vent lines shall be continuously sloped. Trapping is expressly prohibited.

K. Avoid trapping of piping.

L. Install all piping in a neat and workmanlike manner.

M. Cut pipe accurately, and work into place without forcing or springing.

N. Remove burrs to full inside diameter of pipe by reaming.

O. Clean piping components, at time of erection, of loose material.

P. Install piping so as to provide clearance for the following:
   1. Personnel passage and headroom.
   2. Operation of doors or windows.
   3. Equipment.
   4. Electrical panels, lighting, and electrical outlets.
   5. Owner’s apparatus and equipment.

Q. Do not install piping across, in front of, or below the items listed below.
   1. Windows.
   2. Door openings.
   3. Access panels.
   4. Lighting fixtures.

R. Do not install piping within 36 in. in front of, above, over, or in the immediate vicinity of, electrical panels, electrical switchgear, or other electrical equipment, as described in 2011 NEC 110 and 408. Where this is not possible, if approved in writing by the Architect, provide a sheet metal drip pan under piping to prevent water and condensate from running or dripping down on the electrical equipment, at no additional cost to the Owner.

S. Where piping is installed in new masonry block walls, coordinate with the General Trades Contractor so piping enters the wall at a masonry joint wherever possible.

T. Where any system piping runs or components are so placed as to cause or contribute to a conflict, they shall be rerouted and readjusted at the expense of the Contractor causing the conflict. Obtain instructions from the Architect if a conflict occurs. Where a conflict arises, the Architect's decision shall be final in regard to the arrangement of equipment, ductwork, piping, etc.

U. Contractor shall assume cost and responsibility for all cutting and patching resulting from improper coordination of its Work.

V. Securely support all piping from structure with approved hangers, rods, brackets, and accessories. Refer to Section 22 05 29.

W. Provide offsets in system piping runs, additional fittings, necessary drains and valves, and devices required to complete the installation.

X. Offsets:
   1. Provide offsets for the proper operation of the system.
   2. Contractor may need to offset or reroute pipes as required to resolve interferences that develop in the field.
   3. Offset lines around columns, beams, and other obstructions as required.
   4. Offset vents immediately above connection to waste line.
   5. Exercise due and particular caution to determine that all parts of the work are quickly and easily accessible.
   6. Where special conditions are encountered in field, the Architect shall decide arrangement and alignment of piping.

Y. Conceal all pipes, except in equipment rooms, in rooms without ceilings, or where specifically directed otherwise.

Z. Escutcheons:
   1. Where exposed pipes pass through walls, floors, or ceilings of finished rooms, provide chrome-plated escutcheons.
   2. Contractor may provide prime-coated black iron escutcheons in unfinished rooms.
   3. Protect escutcheons from tool marks.

AA. Protect all piping, fittings, and valves from excessive tool marks.

BB. Make changes in pipeline direction with fittings. Do not bend or spring piping.

CC. Joints, Unions, and Connections
   1. Threaded pipe and fittings:
      a. Ream pipe ends at threads to full cross-sectional area after cutting.
      b. Threads shall conform to ASME B1.20.1.
   2. Flanged connections:
      a. Flanged joints shall be faced, square, and true.
      b. Install gaskets suitable for the operating temperature and pressure of the fluid or gaseous medium being piped.

3. Grooved pipe:
   a. Install grooved joint couplings and fittings in accordance with the Manufacturer's written installation instructions.
   b. Grooved ends shall be clean and free from indentations, projections, and roll marks in the area from pipe end to groove.
   c. Use the Manufacturer's recommended gasket lubricants, including any specific lubricants to enhance the temperature rating of the coupling. Lubricate gaskets both inside and out where required by the Coupling Manufacturer. Contractor shall verify lubricant requirements.
   d. Gaskets shall be an elastomer grade suitable for the intended service and shall be molded and produced by the Grooved Coupling Manufacturer. If special lubricant is required by the Manufacturer to enhance gasket performance, the Contractor shall submit lubricant data prior to installation and provide proof that the lubricant is being used on the job site.
   e. A factory-trained representative of the Grooved Coupling Manufacturer shall provide on-site training for the Contractor's field personnel in the use of grooving tools, application of groove, and installation of grooved joint products. The Manufacturer's Representative shall periodically visit the job site and review installation. Provide documentation of the site visits by the Manufacturer's Representative in the Operating and Maintenance Manuals, as required by Section 21 05 60, to include verification of proper gasket lubricants, uniform gap spacing of couplings, proper torque requirements, and notation of any installation deficiencies.
   f. Remove and replace any joints deemed improperly installed.
   g. Installing Contractor shall verify that there are no bolt pad gaps on metal-to-metal type couplings, or that equal gaps are maintained on both sides of the coupling, in accordance with the Manufacturer's specifications.
   h. When tightening bolts, alternate until properly torqued in accordance with the Manufacturer's specifications. The Manufacturer's published torque ratings shall be verified and documented by random sampling of installed couplings.
4. Welded pipe:
   a. An AWS-certified welder shall perform all welding and brazing in accordance with ANSI B31.1.
   b. A qualified welder, certified in accordance with OBC Chapter 4101.8, shall install welded pressure piping.
   c. Welds shall be stamped at each joint or fitting.
   d. Do not torch-cut pipe.
   e. Butt-welded joints shall have substantially full penetration and recommended bead reinforcement.

f. Slip-on, socket, and fillet welds shall have geometry as indicated in ANSI B31.1.
g. Remove all slag, weld scale from joints, and other welding residue as work proceeds and at completion.

5. Soldered and brazed connections:
   a. Joints shall have pipe or tubing end reamed to full inside diameter after cutting.
   b. Exterior of joint shall be smooth.
   c. Clean with steel wool.
   d. Apply flux to prevent oxidation.
   e. Apply solder or brazing filler material, and thoroughly heat to completely melt material and cause it to migrate completely over the mating surfaces.
   f. Solder and brazing work shall comply with ANSI B31.1.
   g. 100% lead-free solder shall be used on water piping, joints, and fittings.
6. Do not use bullhead connections.
7. Where connection size is smaller than piping, make reduction at final connection only. Do not reduce size of pipe drop.
8. Make reductions in piping lines with reducing couplings or weld fitting reducers.
9. Connections to equipment or devices:
   a. Make connections to equipment as recommended by the Manufacturer or as detailed on the Drawings.
   b. Install each union or flange to permit removal of parts and equipment, and in a position permitting the device or equipment to be removed without disconnecting piping beyond the union or flange.
   c. Provide union or flange in final piping connection to each device or item of equipment, and elsewhere, as required to make-up or disconnect piping.
   d. Do not make welded connections to equipment or valves.
10. Dissimilar material connections:
   a. Install dielectric unions or dielectric flanges on all connections between copper tubing and steel pipe and between copper tubing and equipment having ferrous metal connection.
   b. Isolate direct contact between pipe, fittings, flanges, and hangers or dissimilar metal by use of dielectric unions, shims, gaskets, coatings, or other approved methods.
   c. Use dielectric gaskets where joining dissimilar piping material.

DD. Install union adjacent to each threaded valve.

EE. Install all unions and valves in accessible locations. Provide a removable ceiling, or ceiling or wall access panels, as necessary. Coordinate installation of access panels.

FF. Valves:
1. Install valves on each piece of equipment.
2. Install valves at service connections to equipment not provided with valves.
3. Install valves at branch lines from main lines.
4. Refer to Section 22 05 23 for additional valve requirements.

GG. Insulation:
1. Install pipes, valves, fittings, etc. requiring insulation with a minimum of 1/2 in. clearance between the finished covering and other work and between the finished covering of parallel, adjacent pipes.
2. Refer to Section 22 07 00 for additional insulation requirements.

HH. Do not install piping containing fluids subject to freezing in exterior walls, regardless of wall insulation location. Piping subject to freezing may be installed in unheated ceiling spaces only where specifically shown, immediately above the ceiling of a heated space, with building insulation closely packed above the piping to protect it from freezing. Contractor providing the piping shall ensure that vulnerable piping is protected against freezing.

II. Roof Openings:
1. Furnish pipe boots for all piping penetrations through roof.
2. General Trades Contractor shall install pipe boots, flash into roof construction, and make watertight.
3. Coordinate all locations and sizes of roof penetrations for the Plumbing Work.
4. General Trades Contractor shall provide pipe openings through roof, provide flashing, and “roof in,” making absolutely watertight after piping is in place.

JJ. At the end of each day’s work, provide caps and/or plugs at all openings in installed piping for protection. Prevent the possibility of **ANY** foreign materials entering piping.

KK. Identify all piping installed under this Work as required in Section 23 05 53.

END OF SECTION 22 10 00

# SECTION 22 11 16

# DOMESTIC WATER PIPING

## PART 1 GENERAL

### 1.01 RELATED DOCUMENTS

A. Section 22 05 23, “General-Duty Valves for Plumbing Piping.”

B. Section 22 05 29, “Hangers and Supports for Plumbing Piping Equipment.”

C. Section 22 10 00, “Plumbing Piping and Pumps.”

D. Section 22 11 19, “Domestic Water Piping Specialties.”

E. Section 22 40 00, “Plumbing Fixtures.”

### 1.02 DESCRIPTION

A. Connect to existing water piping in main corridor, as shown on the Drawings.

B. Provide a complete system of domestic hot water, hot water return, and cold water piping to fixtures and equipment in new addition.

C. Sterilize complete domestic water system.

D. If other means of draining are not provided, install drain valves at all low points to permit complete draining of the domestic water system. Refer to Section 22 05 23 for drain valves.

E. Test complete system.

### 1.03 QUALITY ASSURANCE

A. Standards:
1. American National Standards Institute (ANSI).
2. American Society for Testing and Materials (ASTM).
3. American Society of Mechanical Engineers (ASME).
4. American Water Works Association (AWWA).
5. American Welding Society (AWS).
6. Factory Mutual Global (FMG).
7. National Sanitation Foundation (NSF).
8. Plumbing and Drainage Institute (PDI).
9. Underwriters Laboratories, Inc. (UL).
10. Columbus, Ohio, Division of Water.

B. All piping materials and installation shall comply with State and Local Building Code requirements.

## PART 2 PRODUCTS

### 2.01 PIPING AND FITTINGS

A. Above Ground: Type "L" hard drawn copper tubing with wrought or forged copper solder fittings (ASTM B88).
   1. **Option:** Copper press fittings.
   2. **Option:** "T-Drill" mechanically formed connections and brazed joints.

B. Trap Primer Drain: Type "K" soft copper (ASTM B88), wrought copper fitting, and brazed joints.

C. Copper press fittings shall conform to the material and sizing requirements of ASME B16.18 or B16.22. O-rings for copper press fittings shall be of EPDM construction.
   1. Acceptable Manufacturers: Viega "ProPress," NIBCO Inc. "Press System," or Elkhart Products Corp. "Xpress."

### 2.02 SOLDER AND BRAZING ALLOYS

A. Solder: 95-5 tin-antimony, lead free.
   1. Acceptable Manufacturers: Engelhard "Silvabrite 100," J. W. Harris Co. "Bridgit," or Oatey.

B. Copper Brazing Alloys: Silver/phosphorous or silver/zinc alloys having a melting point greater than 1,000 deg. F. (ANSI B31.1 and AWS A58).
   1. Acceptable Manufacturers: Handy Harman Sil-Fos, Airco Welding Products Aircosil, or ESAB Allstate.

C. Certify that solder and brazing used for entire piping system is lead-free.

### 2.03 STERILIZATION SOLUTION

A. 400 minimum to 1,000 maximum parts per million chlorine solution made from a sanitation grade of hyperchlorite, 70% available chlorine.

B. Acceptable Hyperchlorites Manufacturers: H.T.H., Perclorn, or Pittchlor.

## PART 3 EXECUTION

### 3.01 COORDINATION

A. Coordinate installation height of faucets, hose bibbs, and wall hydrants with the Architect.

B. Coordinate location of water meter and remote reader with the Architect and the Water Utility Company.

C. Coordinate location of site water service line entrance into building and water meter with equipment and doors.

D. Coordinate location, size, and depth of site water service entrance with the General Trades Contractor and the Water Utility Company.

E. Coordinate location of rough-in and final connections to equipment with the General Trades Contractor, Architect, and Construction Manager.

## 3.02 INSTALLATION

A. Install copper press fittings in accordance with Manufacturer's written instructions using Manufacturer's approved tools.

B. Avoid installing water lines in outside walls. Where unavoidable, obtain prior approval of the Engineer, and install piping so that the wall insulation is between the pipe and the outside wall.

C. Where piping is installed above ceilings and below ceiling insulation, ensure that ceiling insulation has no insulation voids above piping.

D. Install piping in such a manner as to allow complete drainage of the water piping system, toward the source. Provide rigid support for drain piping as required.

E. Valves (refer to Section 22 05 23):
   1. Install shut-off valves:
      a. On hot and cold water on each branch serving more than (1) fixture,
      b. On each domestic hot water return.
      c. On each long run off of a main.
      d. Where shown on the Drawings.
   2. Install ball valves in domestic water supply lines to any equipment or fixtures not provided with stops.

F. In order to add sterilization solution into the domestic water piping system
   1. Provide 3/4 in. valved branches on domestic water system at point of entry into building, just past main backflow preventer.
   2. Provide 3/4 in. valved branches at the beginning of each new branch.
   3. Provide 3/4 in. valved inlet immediately downstream of backflow preventer.

G. Shock Absorber: Install at the end of each main or branch, unless otherwise noted. Refer to Section 22 11 19.

H. Balance each domestic hot water return system to provide an even flow from each branch.

I. General Trades Contractor shall paint all exposed, non-chrome-plated, water piping in kitchen.

## 3.03 PIPING CLEANING AND TESTING

A. Perform all tests and inspections before backfilling, or covering or concealing any piping.

B. After erection, and prior to putting in service, blow or flush lines free of loose materials.

C. Flush out all new water piping systems to remove dirt and grease from pipes and equipment before connection to existing system and before systems are placed in operation. Clean strainers after each flushing until they remain clean.

D. Clean strainer screens and sediment pockets prior to putting lines in service.

E. Clean out and flush new water piping systems.

F. Provide a temporary inline pump for cleaning and flushing of new piping system.

G. Perform tests as required by the State and Local Building Code and as specified below:
   1. Take precautions to remove all air before performing hydrostatic tests.
   2. Test piping at 125 PSIG for (6) hours with no pressure drop. All tests shall be made before piping is insulated or concealed. Tests shall be witnessed by the Architect's Representative.
   3. If a leak occurs, defective piece or joint shall be replaced. No caulking will be permitted. Tests shall then be repeated.

## 3.04 STERILIZATION OF DOMESTIC WATER LINES

A. After water piping is complete and fixtures have been installed, flush piping clean and sterilize all domestic hot water, hot water return, and cold water piping, including water service line and water heaters.

B. Sterilization shall be done under the immediate on-the-job supervision of a Water Testing Laboratory regularly engaged in the service. Pay all fees for testing and use of testing equipment.

C. With all outlets closed, fill system to working pressure and close valve on supply main.

D. Open all fixtures slightly and pump sterilization solution specified in Part 2 into test tap.

E. Each outlet, hot and cold, shall be tested during fill to prove the presence of chlorine at that outlet. Chlorine shall be present at all outlets.

F. Water piping system shall remain filled for a period of (24) hours and each outlet shall be again tested and shall have at least 100 parts per million of chlorine remaining.

G. Upon completion of sterilizing, all outlets shall be opened wide and the main supply valves opened, flushing system free of chlorine. Outlets shall be again checked and flushed until free of chlorine. Flush main valves and entire building domestic water system. Coordinate with the Architect and Construction Manager.

H. After final flushing, all electric water cooler inlet strainers and all aerators shall be removed, cleaned, and replaced.

I. Chlorination of the system may be performed at same time the pressure test is conducted.

J. Provide the Architect with a “Certificate of Completion of Chlorination” after chlorination is completed.

END OF SECTION 22 11 16

# SECTION 22 11 19

# DOMESTIC WATER PIPING SPECIALTIES

## PART 1 GENERAL

### 1.01 DESCRIPTION

A. Provide plumbing piping specialties or accessories as shown or required to complete the installation of all plumbing systems installed on this Project.

B. All products of the same type shall be by the same Manufacturer.

### 1.02 QUALITY ASSURANCE

A. Standards:
   1. American Society of Sanitary Engineering (ASSE).
   2. American Society of Mechanical Engineers (ASME).
   3. American National Standards Institute (ANSI).
   4. Plumbing and Drainage Institute (PDI).
   5. U.S. Public Health Service.
   6. Underwriters Laboratories, Inc. (UL).
   7. Factory Mutual Global (FMG).
   8. Food and Drug Administration (FDA).

## PART 2 PRODUCTS

### 2.01 SHOCK ABSORBERS

A. Wade “Shokstops.” (ASSE Standard 1010, PDI-WH201) shock absorbers (water hammer arresters). Sizes as shown on the Drawings.
   1. SA-A: 3/4 in. pipe. ([1] to [11] fixture units.)
   2. SA-B: 1 in. pipe. ([12] to [32] fixture units.)
   3. SA-C: 1 in. pipe. ([33] to [60] fixture units.)

B. Other Acceptable Manufacturers: Approved equal by Mifab, Zurn, J. R. Smith, Josam, Watts, Sioux Chief, or Precision Products.

C. As an option, air chambers may be used. Size of air chambers shall be (1) size larger than supply line and a minimum of 2 ft. in length.

### 2.02 TRAP PRIMERS

A. TP-1: Precision Plumbing Products “Prime-Rite,” Model No. PO-500 (ASSE Standard 1018). Brass housing nonadjustable flow control valve. Provide distribution unit listed below. Units shall adjust automatically to line pressure and flow.
   1. Model No. DU-2 for (2) floor drains.
   2. Model No. DU-3 for (3) floor drains.
   3. Model No. DU-4 for (4) floor drains.

B. Other Acceptable Manufacturers: Approved equal by Mifab, Wade, Watts, or Zurn.

## PART 3 EXECUTION

### 3.01 INSTALLATION

A. Shock Absorbers: Locate according to PDI Standard WH-201 and where shown on Drawings. Size indicated on the Drawings.

B. Trap Primers TP-1: Mount trap primer on wall in accessible location. Install according to Manufacturer's instructions. Provide individual 3/4 in. gravity drains from trap primer assembly to inlet of each floor drain trap where indicated on the Drawings.

END OF SECTION 22 11 19

# SECTION 22 13 16

# SANITARY WASTE AND VENT PIPING

## PART 1 GENERAL

### 1.01 RELATED DOCUMENTS

A. Section 22 05 76, “Facility Drainage Piping Cleanouts.”

B. Section 22 10 00, “Plumbing Piping and Pumps.”

C. Section 22 40 00, “Plumbing Fixtures.”

D. Refer to Drawings for Fixture and Equipment Branch Size Connection Schedule.

### 1.02 DESCRIPTION

A. Connect to site sanitary sewer system 5 ft. outside building foundation wall where shown on the Drawings. Extend sanitary line into building.

B. General Trades Contractor shall provide the site sanitary sewer system.

C. Provide a complete system of interior soil, waste, and vent piping to fixtures and equipment, including the following items:
   1. Floor drains.
   2. Cleanouts: Refer to Section 22 05 76.
   3. Traps.
   4. Vents.

D. Test complete system.

### 1.03 QUALITY ASSURANCE

A. Standards:
   1. American Society of Sanitary Engineers (ASSE).
   2. American Society for Testing and Materials (ASTM).
   3. American National Standards Institute (ANSI).
   4. Factory Mutual Global (FMG).
   5. Cast Iron Soil Pipe Institute (CISPI).
   6. National Sanitation Foundation (NSF).

B. All pipe and fittings shall conform to the requirements of ASTM A74.

C. All piping materials and installation shall comply with State and Local Building Code requirements.

## PART 2 PRODUCTS

### 2.01 MANUFACTURERS AND MODEL NUMBERS

A. Manufacturer and Model Number listed under Part 2 shall be considered to be the Design Base Manufacturer and Model Number. Other Acceptable Manufacturers will be permitted, unless specifically excluded.

### 2.02 PIPING

A. Sanitary, waste, and vent piping and fittings under slab:
   1. Extra-heavy weight, single hub cast iron (ASTM A74), factory-coated with coal tar enamel.
   2. Hubless cast iron (ASTM A74), factory-coated with coal tar enamel.
   3. Copper DWV tube, 3 in. and smaller (ASTM B306): Type K drainage tube, drawn temper.
   4. Schedule 40 PVC/DWV plastic (ASTM D2665).
   5. Schedule 40 ABS/DWV plastic (ASTM D2661).

B. Interior above-grade sanitary waste and vent piping and fittings:
   1. Service weight, single hub cast iron (ASTM A74), factory-coated with coal tar enamel.
   2. Hubless cast iron (ASTM A74), factory-coated with coal tar enamel.
   3. Steel pipe, 2-1/2 in. and smaller (ASTM A53): Type E or S, Grade A or B, Schedule 40, galvanized.
   4. Copper DWV tube, 4 in. and smaller (ASTM B306): Type L drainage tube, drawn temper.
   5. PVC Schedule 40 solid wall pipe according to ASTM D 1784, D 1785, and D 2665. PVC DWV fittings conforming to ASTM D 1784 and D 2665.

C. Cast iron pipe and fittings shall be factory-coated with coal tar enamel.

D. Acceptable Manufacturers:
   1. Cast iron: Charlotte, Clow, American Cast Iron, Tyler Pipe, U. S. Pipe & Foundry, MWI, or Griffin.
   2. Copper: American Brass Co., Revere, Chase Brass Co., or Nibco.
   3. ABS or PVC plastic: Yardley, Nibco, Crestline, or Charlotte.
   4. Steel: Armco, Republic, or Wheeling.

### 2.03 JOINTS

A. Cast Iron:
   1. Tarred jute or oakum with lead poured flush with hub.
   2. (ASTM C-564) Compression-type plastic seal.
   3. Joints in hubless cast iron pipe sizes 1-1/2 in. to 10 in. shall be made with coupling approved to FMG 1680 Class 1 and marked with the logo. Couplings for pipe sizes 1-1/2 in. to 4 in.: Clamp-All Corporation Model #80.

4. Joints in hubless cast iron pipe sizes 1-1/2 in. to 2 in. where exposure to head pressure cannot exceed 10 ft. shall be approved to CISPI 310.
   a. Acceptable Coupling Manufacturers: Anaco, Tyler, Charlotte, Jones, or Ideal.
5. Acceptable Manufacturers: Charlotte, Clow, American Cast Iron, Tyler Pipe, U. S. Pipe & Foundry, MWI, or Griffin.

B. Copper: Cast (ASTM B16.23) or wrought (ASTM B16.29) copper drainage fittings with solder joints.
   1. Acceptable Manufacturers: American Brass Co., Revere, Chase Brass Co., or Nibco.

C. ABS or PVC Plastic:
   1. Acceptable Manufacturers: Yardley, Nibco, Crestline, or Charlotte.
   2. Solvents and cements as recommended by the Manufacturer.

D. Galvanized Steel: Threaded, galvanized cast iron drainage fittings.
   1. Acceptable Manufacturers: Armco, Republic, or Wheeling.

E. All fittings shall be compatible with piping for size, material, and joint type.

## 2.04 FLOOR DRAINS

A. Drains shall be adjustable, coated cast iron double drainage pattern, bottom outlet, flashing clamp, strainers, sediment buckets, and with other accessories and features as noted below.

B. Each floor drain grate that has a load rating shall have an ANSI load rating indicated on shop drawings. If rating is not indicated on shop drawings, they will be rejected.

C. Each floor drain that is required to have a secured grate shall have at least (4) screws for attachment of grate.

D. Slot in grates shall be free of flashing (clean cut), and tops shall not have sharp edges.

E. FD-1: Mifab F1000-S-3-6-7. Cast iron body, adjustable, 5 in. square strainer, secured, stainless steel strainer, caulk or push-on outlet, 3 in. pipe size, as noted, and 3/4 in. trap primer connection.

F. Acceptable Manufacturers: Mifab, Zurn, J. R. Smith, Wade, Josam, or Watts.

## 2.05 VENT FLASHING

A. Furnish roof vent boots.

B. General Trades Contractor shall install roof vent boots and provide flashing.

## PART 3 EXECUTION

### 3.01 COORDINATION

A. Coordinate location and depth of building sanitary drain installation with the General Trades Contractor and building foundation.

B. Coordinate location, elevation, and installation of standpipes and floor drains with the equipment, concrete pads, General Trades Contractor, and Architect.

C. Coordinate location of vents through roof with the HVAC Contractor, General Trades Contractor, and Architect.

### 3.02 BUILDING INSPECTION

A. Examine the areas and the conditions under which interior sanitary piping system work is to be installed and notify the Architect and Construction Manager of conditions detrimental to the proper and timely completion of the Work.

B. Do not proceed with the Work until unsatisfactory conditions have been corrected.

### 3.03 INSTALLATION — PIPING

A. Pitch soil and waste piping in direction of flow at not less than 1/8 in./ft. and not more than 1/4 in./ft. Pitch pipes 2 in. and smaller at 1/4 in./ft.

B. Pitch all vents for proper drainage.

C. Conceal all piping, unless indicated otherwise on the Drawings.

D. Minimum size is 2 in. for underground soil and waste piping.

E. “Dead end” sanitary branches longer than 2 ft.-0 in. will not be permitted.

F. Install wall cleanouts at the base of all stacks at 18 in. above finished floor where indicated on Drawings. Provide exposed cleanout without cover plate in unfinished areas or in above-ceiling installations.

G. Plastic Piping: Do not install plastic piping:
   1. Where it may be vulnerable to physical damage.
   2. Where run exposed.
   3. Where run exposed below joist level.
   4. Where run exposed below 8 ft. above floor.
   5. In ceiling spaces used for return air plenums. Refer to Architectural and HVAC Drawings for the location of these areas.

H. All exposed vent piping shall be galvanized steel.

I. Make all connections and changes in direction of the sanitary drainage system with approved drainage fittings.
   1. The fittings shall not have ledges or shoulders that are capable of obstructing flow in the piping.
   2. Install fittings to guide waste in the direction of flow.

## 3.04 INSTALLATION — FLOOR DRAINS, TRAPS, AND GRATES

A. Drains:
   1. Install top of floor drains flush and level with wall and finished floor.
   2. If not shown on Architectural Drawings, confirm elevation and proper pitch to drains with the Architect before roughing in.
   3. **REMOVE AND REPLACE ALL ITEMS NOT INSTALLED AT PROPER ALIGNMENT, PROPER ELEVATION, FLUSH, AND LEVEL, AT NO COST TO THE OWNER.**

B. Traps: Install P-trap below floor for floor drains.

C. Where tile is to be installed, adjust top of floor drain to be flush with the finished surface.

D. Install duct tape over grates for floor drains to provide protection from scratching and collection of dirt and debris during construction. Remove tape just prior to final inspection.

## 3.05 INSTALLATION — VENTS

A. Install vents through roof as follows:
   1. 3 in. minimum size.
   2. Locate at least 8 ft. away from outside wall of building and 20 ft. away from outside air intakes or operable windows.
   3. Offset vent piping below roof to allow for thermal expansion and contraction of roof. Minimum of 4 ft. offset.
   4. Vents shall extend a minimum of 12 in. above roof, except where specifically required to be higher by Code.
   5. Single membrane roofs: Install vent through roof vent boot. Furnish roof vent boots to the General Trades Contractor for installation.
   6. General Trades Contractor shall flash vents into roof construction and make watertight.

## 3.06 TESTS

A. Perform all tests before any piping is covered or concealed.

B. Test entire sanitary piping system as required by the State and Local Building Code and as specified below.

C. For a minimum test, plug piping at the lowest point and fill with water to highest point on roof to provide a minimum of 10 ft. hd. of water on all parts of the system. Maintain for (1) hour with no leakage. Repair any deficiencies. Conduct final test with smoke or peppermint at 1 in. W.G. for (15) minutes. Install gaskets or reset fixtures as required.

D. Should leaks occur, remove the defective section of pipe and defective fitting and replace with new materials at no cost to the Owner.

E. Repeat tests until no leaks occur.

END OF SECTION 22 13 16

# SECTION 22 14 00

# FACILITY STORM DRAINAGE

## PART 1 GENERAL

### 1.01 RELATED DOCUMENTS

A. Section 22 05 76, “Facility Drainage Piping Cleanouts.”

B. Section 22 07 00, “Plumbing Insulation.”

C. Section 22 10 00, “Plumbing Piping and Pumps.”

### 1.02 DESCRIPTION

A. Building storm drain shall extend to a point 5 ft. beyond the foundation wall, unless otherwise indicated on Drawings.

B. General Trades Contractor shall provide the site storm sewer system.

C. Connect to storm sewer system where shown on the Drawings.

D. Provide a complete system of interior storm-water piping, including cleanouts. Refer to Section 22 05 76 regarding cleanouts.

E. Furnish roof drains.

F. General Trades Contractor shall install all roof drains and provide foundation drains.

G. Test complete system.

### 1.03 QUALITY ASSURANCE

A. Standards:
   1. American Society for Testing and Materials (ASTM).
   2. Cast Iron Soil Pipe Institute (CISPI).

B. All pipe and fittings shall conform to the requirements of ASTM A74.

C. All piping materials and installation shall comply with State and Local Building Code requirements.

## PART 2 PRODUCTS

### 2.01 PIPING

A. Storm piping and fittings under slab:
   1. Extra-heavy weight, single hub cast iron (ASTM A74), factory-coated with coal tar enamel.
   2. Hubless cast iron (ASTM A74), factory-coated with coal tar enamel.
   3. Schedule 40 PVC/DWV plastic (ASTM D2665).
   4. Schedule 40 ABS/DWV plastic (ASTM D2661).

B. Interior above-grade piping and fittings:
   1. Service weight, single hub cast iron (ASTM A74), factory-coated with coal tar enamel.
   2. Hubless cast iron (ASTM A74), factory-coated with coal tar enamel.
   3. Copper DWV tube, 4 in. and smaller (ASTM B306): Type L drainage tube, drawn temper.
   4. PVC Schedule 40 solid wall pipe according to ASTM D 1784, D 1785, and D 2665; PVC DWV fittings conforming to ASTM D 1784 and D 2665.

C. Cast iron pipe and fittings shall be factory-coated with coal tar enamel.

D. Acceptable Manufacturers:
   1. Cast iron: Charlotte, Clow, American Cast Iron, Tyler Pipe, U. S. Pipe & Foundry, MWI, or Griffin.
   2. Steel: Armco, Republic, or Wheeling.
   3. Copper: American Brass Co., Revere, Chase Brass Co., or Nibco.
   4. ABS or PVC plastic: Yardley, Nibco, Crestline, or Charlotte.

## 2.02 JOINTS

A. Cast Iron:
   1. Tarred jute or oakum with lead pour flush with hub.
   2. (ASTM C-564) Compression type plastic seal.
   3. Joints in hubless cast iron pipe sizes 1-1/2 in. to 10 in. shall be made with coupling approved to FMG Standard 1680 Class 1 and marked with the logo.
      a. Couplings for pipe sizes 1-1/2 in. to 4 in.: Clamp-All Corporation Model #80.
      b. Couplings for pipe sizes 5 in. to 10 in.: Clamp-All Corporation Model #125.
   4. Joints in hubless cast iron pipe sizes 1-1/2 in. to 2 in., where exposure to head pressure cannot exceed 10 ft., shall be approved to CISPI 310.
      a. Acceptable Coupling Manufacturers: Tyler, Charlotte, or Jones.
   5. Acceptable Manufacturers: Charlotte, Clow, American Cast Iron, Tyler Pipe, U. S. Pipe & Foundry, MWI, or Griffin.

B. Copper: Cast (ASTM B16.23) or wrought (ASTM B16.29) copper drainage fittings with solder joints.
   1. Acceptable Manufacturers: American Brass Co., Revere, Chase Brass Co., or Nibco.

C. ABS or PVC Plastic:
   1. Acceptable Manufacturers: Yardley, Nibco, Crestline, or Charlotte.
   2. Solvents and cements as recommended by the Manufacturer.

D. All fittings shall be compatible with piping for size, material, and joint type.

## 2.03 ROOF DRAINS

A. RD-1: Mifab #R1200-E-B-M. Adjustable cast iron drain and cast iron dome, bottom outlet, no-hub, membrane clamping collar, roof sump receiver, deck

clamp, extension collar where required, and accessories as required for roof construction. Size as indicated on Drawings.

B. Furnish roof drain and turn over to the General Trades Contractor for installation.

C. Other Acceptable Manufacturers: Approved equal by Zurn, J. R. Smith, Wade, Josam, Watts, or Ancon.

## 2.04 EMERGENCY ROOF DRAINS

A. RD-2 (emergency overflow): Mifab #R1200-EB-M-W4. Adjustable cast iron drain and dome, bottom outlet, no-hub, membrane clamping collar, 4 in. internal water dam, deck clamp, extension collar where required, and accessories as required for roof construction. Size as indicated on Drawings.

B. Furnish roof drain and turn over to the General Trades Contractor for installation.

C. Other Acceptable Manufacturers: Approved equal by Zurn, J. R. Smith, Wade, Josam, Watts, or Ancon.

## 2.05 DOWNSPOUT NOZZLES

A. DN-1: Mifab #R1940-1-83. Nickel/bronze body, threaded inlet, wall flange, and outlet nozzle with stainless steel screen. Size as indicated on Drawings.

B. Other Acceptable Manufacturers: Approved equal by Zurn, J. R. Smith, Wade, Josam, or Ancon.

# PART 3 EXECUTION

## 3.01 COORDINATION

A. Coordinate roof drain and cleanout locations, elevations, and installation with the General Trades Contractor.

B. Coordinate location and depth of building storm drain installation with the General Trades Contractor and building foundation.

## 3.02 BUILDING INSPECTION

A. Examine the areas and the conditions under which interior storm-water piping system work is to be installed and notify the Architect and Construction Manager of conditions detrimental to the proper and timely completion of the Work.

B. Do not proceed with the Work until unsatisfactory conditions have been corrected.

## 3.03 INSTALLATION

A. Pitch storm piping in direction of flow at not less than 1/8 in./ft. and not more than 1/4 in./ft., unless otherwise noted.

B. Conceal all piping, unless indicated otherwise on the Drawings.

C. Storm lines shall be continuously sloped. Trapping is expressly prohibited.

D. Install wall cleanouts and covers at 18 in. above finished floor, and at the base of all downspouts where indicated on the Drawings. Provide exposed cleanout plugs without cover plate in unfinished areas or in above ceiling installations.

E. Plastic Piping: Do not install plastic piping:
   1. Where it may be vulnerable to physical damage.
   2. Where run exposed.
   3. Where run exposed below joist level.
   4. Where run exposed below 8 ft. above floor.
   5. In ceiling spaces used for return air plenums. Refer to Architectural and HVAC Drawings for the location of these areas.

F. General Trades Contractor shall flash into roof construction and make watertight. See detail on the Architectural Drawings.

G. General Trades Contractor shall install emergency roof drains adjacent to each roof drain. Install at a higher elevation than the main roof drain (not in sump pan). See locations on the Drawings. See detail on the Architectural Drawings.

H. Offset roof drain piping below roof to allow for thermal expansion and contraction of roof.

I. Avoid locating horizontal storm piping in elevator equipment rooms. If horizontal storm piping must be located in elevator equipment rooms, obtain written permission from the Architect to do so. Any horizontal storm piping located in elevator equipment rooms shall be covered and enclosed by a painted metal enclosure to prevent water dripping onto equipment.

J. After erection, and prior to putting in service, blow or flush lines free of loose materials.

## 3.04 TESTS

A. Perform all tests and inspections before insulating, covering, or concealing any piping.

B. Test entire storm piping system as required by the Code Authority having Jurisdiction, and as specified below.

C. For a minimum test, plug piping at the lowest point and fill with water to highest point on roof to provide a minimum of 10 ft. hd. of water on all parts of the system. Maintain for (1) hour with no leakage. Repair any deficiencies. Final test shall be conducted with smoke or peppermint at 1 in. W.G. for (15) minutes.

D. Should leaks occur, remove the defective section of pipe and defective fitting and replace with new materials at no cost to Owner.

E. Repeat tests until no leaks occur.

END OF SECTION 22 14 00

# SECTION 22 40 00

# PLUMBING FIXTURES

## PART 1 GENERAL

### 1.01 RELATED DOCUMENTS

A. Section 22 07 00, “Plumbing Insulation.”

B. Section 22 11 16, “Domestic Water Piping.”

C. Section 22 11 19, “Domestic Water Piping Specialties.”

D. Section 22 13 16, “Sanitary Waste and Vent Piping.”

### 1.02 DESCRIPTION

A. Provide plumbing fixtures installed in place, complete with supports, supply, and waste trim as indicated on the Drawings.

B. Provide trim, fittings, carriers, angle stops, chrome water supply piping, and all accessories required for a complete installation.

C. All plumbing fixtures shall be of commercial quality and free of defects.

D. All fixtures shall have vandal-resistant handles, aerators, escutcheons, carriers, nuts, and bolts.

E. Exposed metal parts shall be nonferrous and chrome-plated, unless otherwise noted.

F. All trim and exposed piping shall be chrome-plated, unless noted otherwise.

G. Fixture connection sizes are shown on Drawings.

H. Faucets shall have ceramic disc valve cartridges.

### 1.03 QUALITY ASSURANCE

A. Standards:
1. American National Standards Institute (ANSI).
2. American Society of Sanitary Engineering (ASSE).
3. Americans with Disabilities Act (ADA) Accessibility Guidelines.
4. Architectural Barriers Act (ABA) Accessibility Guidelines.
5. Federal Energy Policy Act of 1992.
6. International Cast Polymer Alliance (ICPA).
7. International Code Council (ICC) A117.1, “Accessible and Usable Buildings and Facilities.”
8. National Electrical Manufacturers Association (NEMA) as applicable.
9. National Sanitation Foundation (NSF).
10. Plumbing and Drainage Institute (PDI).
11. Underwriters Laboratories, Inc., (UL) as applicable.

12. State of Ohio:
    a. Ohio Administrative Code (OAC) 4101:1-13, Energy Efficiency.
    b. OAC 4101:3: 2011 Ohio Plumbing Code.
13. Local Plumbing and Energy Codes.
14. American Society for Testing and Materials (ASTM).
15. International Association of Plumbing and Mechanical Officials (IAPMO).

## 1.04 SUBMITTALS

A. Submit Manufacturer's product data for all products specified in this Section and shown on the Drawings.

B. Each shop drawing submittal shall be clearly marked with model number and fixture designation number and shall indicate all required accessories, dimensions, construction, color, and rough-in requirements. Submit color charts when required.

# PART 2 PRODUCTS

## 2.01 PLUMBING FIXTURES AND ACCESSORIES

A. Manufacturer and Model Number listed below shall be considered to be the Design Base Manufacturer and Model Number. Other Acceptable Manufacturers listed herein will be permitted, unless specifically excluded.

## 2.02 SINKS

A. SINK-1: Elkay "Lustertone" Model DRKAD-2517C-55-4-R. Single compartment, countertop with bubbler, 18 ga. Type 304 stainless steel, 25 in. x 17 in. x 5-1/2 in. deep, compartment is 16 in. x 13-1/2 in. x 5-1/2 in. deep, 4-hole punching, #6 finish, undersides fully undercoated.
    1. Faucet for Beechwood Elementary School: Elkay Model LKD2432BH. Chrome swing gooseneck spout, aerator, 4 in. blade handles, and chrome water supply piping with loose key angle stops.
    2. Faucet for Etna Elementary School: Elkay Model LKD2432BH. Chrome swing gooseneck spout, aerator, 4 in. blade handles, and chrome water supply piping with loose key angle stops.
    3. Faucet for Kae Elementary School: Elkay Model LKD2432BH. Chrome swing gooseneck spout, aerator, 4 in. blade handles, and chrome water supply piping with loose key angle stops.
    4. Bubbler: Elkay Model LK-1141A: Lead-free. Install on right hand front corner of sink.
    5. Drain: Elkay Model LK-35L, stainless steel body and conical strainer basket, chrome cast brass trap with cleanout plug, chrome 17 ga. drain to wall. Drain location in center rear of bowl.
    6. Escutcheon plates: Chrome metal supply and waste.

B. Coordinate size of sink with the General Trades Contractor before ordering sink. Install sink in countertop and casework.

C. Acceptable Manufacturers:
   1. Stainless steel sinks: Elkay, Just Mfg. Co., Moen “Lancelot,” or Republic.
   2. Commercial stainless steel sinks: Amtekco, Elkay, Just Mfg. Co., Moen, Republic, or Metcraft.
   3. Faucets: Chicago Faucet, American Standard, Elkay, Kohler, Eljer, Crane, T & S Brass Company, Grohe, Speakman, Moen, Zurn, Delta, Sloan, Symmons, Bradley, or Gerber.
   4. Supplies, escutcheons, and traps: Brasscraft, Bridgeport, Consolidated, Frost, Waterway, McGuire Mfg. Co., Dearborn, Sanitary-Dash, Speedway, Zurn, Anso-Flex, or EBC.

## PART 3 EXECUTION

### 3.01 DELIVERY, STORAGE, AND HANDLING

A. Fixtures and trim shall remain crated and stored until installation to prevent physical damage and moisture and dirt contamination.

B. Adequately protect installed fixtures from damage with cardboard, plywood, or other rigid material.

### 3.02 COORDINATION

A. Coordinate exact location and installed height of plumbing fixtures with the Architect and General Trades Contractor.

B. General Trades Contractor shall cut countertop openings. Furnish templates and locate. Coordinate with the General Trades Contractor and Architect.

C. Before ordering countertop fixtures, coordinate countertop fixture selection with cabinet sizes and the General Trades Contractor.

### 3.03 INSTALLATION

A. Install fixtures and trim according to Manufacturer’s recommendations.

B. Provide all required seals, gaskets, nuts, bolts, and washers.

C. Carefully assemble and connect fixtures to the required plumbing inlets and outlets, and test so the fixtures will function correctly when the Work is completed.

D. Provide stops on all cold and hot water supplies to fixtures.

E. Install chrome-plated brass escutcheons on waste and supply piping at walls, including piping located inside cabinets.

F. Provide chrome cast brass tailpiece, trap, and chrome 17 ga. drain to wall.

G. After the installation of the plumbing fixtures and trim is completed, flush out all connecting pipes through the fixtures to eliminate scale. Clean strainers. Refer to Section 22 11 16 for information on sterilization of water lines.

H. Thoroughly clean all fixtures of paper and dirt before final acceptance.

END OF SECTION 22 40 00

# DIVISION 23

# HVAC INDEX

## 23 00 00 HEATING, VENTILATING, AND AIR-CONDITIONING (HVAC)


| | |
|---|---|
| Common Work Results for HVAC | 23 05 00-1 thru 20 |
| HVAC Lubrication and Packing | 23 05 03-1 |
| HVAC Access Panels | 23 05 04-1, 2 |
| HVAC Submittals | 23 05 06-1 thru 5 |
| HVAC Operating and Maintenance Manuals | 23 05 07-1, 2 |
| HVAC Sleeves | 23 05 15-1 thru 4 |
| Expansion Fittings and Loops for HVAC Piping | 23 05 16-1, 2 |
| General-Duty Valves for HVAC Piping | 23 05 23-1 thru 3 |
| Hangers and Supports for HVAC Piping and Equipment | 23 05 29-1 thru 7 |
| Vibration & Seismic Controls for HVAC Piping & Equipment | 23 05 48-1, 2 |
| Identification for HVAC Piping and Equipment | 23 05 53-1 thru 4 |
| Requirements for Completion of HVAC Work | 23 05 60-1 thru 3 |
| Testing, Adjusting, and Balancing for HVAC | 23 05 93-1 thru 5 |
| HVAC Insulation | 23 07 00-1 thru 7 |
| Commissioning of HVAC | 23 08 00-1 thru 6 |
| Instrumentation and Control for HVAC (Electrical Coordination) | 23 09 00-1 thru 5 |
| Direct-Digital Control System for HVAC | 23 09 23-1 thru 10 |
| Sequence of Operations for HVAC Controls | 23 09 93-1 thru 10 |


## 23 20 00 HVAC PIPING AND PUMPS


| | |
|---|---|
| HVAC Piping and Pumps | 23 20 00-1 thru 6 |
| Hydronic Piping and Pumps | 23 21 00-1 thru 6 |
| Refrigerant Piping | 23 23 00-1, 2 |


## 23 30 00 HVAC AIR DISTRIBUTION


| | |
|---|---|
| HVAC Ducts and Casings (Hangers and Supports) | 23 31 00-1 thru 6 |
| Metal Ducts (Low-Velocity) | 23 31 13-1 thru 6 |
| Air Duct Accessories | 23 33 00-1, 2 |
| Dampers | 23 33 13-1 thru 3 |

Air Terminal Units 23 36 00-1 thru 3
Air Outlets and Inlets 23 37 00-1, 2

## 23 70 00 CENTRAL HVAC EQUIPMENT

Packaged Outdoor HVAC Equipment 23 74 00-1 thru 13

## 23 80 00 DECENTRALIZED HVAC EQUIPMENT

Air-Source Unitary Heat Pumps 23 81 43-1 thru 8
Cabinet Unit Heaters 23 82 39.13-1 thru 3

# SECTION 23 05 00

# COMMON WORK RESULTS FOR HVAC

## PART 1 GENERAL

### 1.01 PREFACE

A. HVAC Contractor is responsible for the Work described in Division 23, "Heating, Ventilating, and Air Conditioning," Sections 23 00 00 through 23 99 99 (as included), unless otherwise noted.

B. HVAC Contractor is also responsible for the Work described in Division 26, "Electrical," Section 26 29 23, "Variable-Frequency Motor Controllers."

C. **Terminology:** In the Sections listed above, the term "Contractor" shall mean the HVAC Contractor performing Work on this Project, unless otherwise noted.

### 1.02 RELATED DOCUMENTS

A. Refer to the following additional Divisions and Sections for specific requirements, responsibilities, and methods relating to Division 23 Work:
   1. Division 00, "Procurement and Contracting Requirements": All sections.
   2. Division 01, "General Requirements": All sections.
   3. Division 07, "Thermal and Moisture Protection," Section 07 92 00, "Joint Sealants."
   4. Division 09, "Finishes," Section 09 91 00, "Painting."

### 1.03 DESCRIPTION

A. The provisions listed in this Section shall supersede any conflicting statements contained elsewhere in the Specifications. Contractor is responsible for the more restrictive requirement between these general provisions and other requirements contained elsewhere in the Specifications.

B. Furnish material, labor, tools, accessories, and equipment to complete and have ready for operation all HVAC systems of this Project as described in these Specifications and as shown on the Drawings.

C. It is the intent that the HVAC Work be complete in every respect. Install Work in compliance with the Latest Enforced Edition of all applicable Codes, Regulations, and Standards, unless otherwise noted. Obtain all permits, licenses, and certifications required by the Code Authority having Jurisdiction.

D. Only a Contractor and craftsmen licensed by the State as required shall install this HVAC Work.

E. Temperature Controls Work shall be performed as Sub-Contract Work by Honeywell, as part of this Contract.

F. Use sufficient workers and competent supervisors in execution of this portion of the Work to ensure proper and adequate installation throughout. In the acceptance or rejection of installed HVAC system, no allowance will be made for lack of skill on the part of workers.

G. Shop drawings for the installation of an HVAC system shall be submitted and reviewed by the Architect before any HVAC work is installed, enlarged, or extended. Under **NO** circumstances shall any Work be performed prior to receiving shop drawings reviewed by the Architect.

H. Coordinate location of all work with other Contractors and equipment.

I. Work includes, but is not limited to, the following:
   1. Vibration isolators.
   2. Variable speed drive and motor.
   3. Systems balancing.
   4. HVAC insulation.
   5. Temperature controls.
   6. HVAC piping and pumps:
      a. Heating water piping system.
      b. Refrigerant piping system.
      c. Pumps.
   7. HVAC air distribution:
      a. Ductwork.
      b. Dampers.
      c. Terminal boxes.
      d. Diffusers, registers, and grilles.
   8. Filters.
   9. Central HVAC equipment: Dedicated outdoor air system (DOAS) units.
   10. Decentralized HVAC equipment:
      a. Variable refrigerant flow (VRF) heat pumps.
      b. VRF fan coil units.
      c. Cabinet unit heaters.

J. The HVAC system shall not be considered complete and acceptable unless, and until, all Code and Governing Agency requirements are satisfied.

K. Refer to Division 01 and Section 23 05 60, “Requirements for Completion of HVAC Work,” for additional requirements.

## 1.04 STANDARDS OF QUALITY

A. Contractor shall provide Work of the highest quality, conforming to the accepted practices and standards of the Trades involved.

B. Further definition of quality is given by reference to various Laws, Codes, Standards, and Regulations.

C. All work on this Project shall conform to applicable National, State, and Local Building Codes and any local laws, ordinances, regulations, and requirements pertaining to this work. Code references, when made, shall be based upon the currently enforced Edition.

D. Any Law, Code, Standard, or Regulation referred to in other Sections of Division 23 is included in its entirety as a part of these Specifications.

E. Give notice and comply with all Laws, Ordinances, Rules, Regulations, and lawful orders of the Code Authority having Jurisdiction bearing on the performance of the HVAC Work.

F. The following Codes apply to this Work:
   1. State of Ohio: Ohio Administrative Code (OAC):
      a. OAC 1301:7-7: 2011 Ohio Fire Code.
      b. OAC 4101:1: 2011 Ohio Building Code.
      c. OAC 4101:2: 2011 Ohio Mechanical Code.
      d. OAC 4101:3: 2011 Ohio Plumbing Code.
   2. National:
      a. National Fire Protection Association (NFPA), Current Edition. Codes as listed in subsequent Specification Sections, including 2011 NFPA 70, “National Electrical Code® (NEC).
      b. Americans with Disabilities Act (ADA) (36 CFR 1191).
      c. American Society of Mechanical Engineers (ASME) Welding Code B31.1.0.

G. Licensed Contractors shall perform Work as required by State Codes.

H. Methods and materials shall be certified where noted in the individual Specification Sections.

I. All equipment and appliances installed on this Project shall bear the label of an Approved Testing Agency, and shall be installed in accordance with the Manufacturer’s instructions for the labeled equipment and appliances.

J. All structural steel used on this Project shall be manufactured in the United States, per Ohio Revised Code 153.011.

K. Work shall comply with Franklin County Health Department requirements.

## 1.05 CONTRACT DRAWINGS

A. Drawings are schematic and show approximate locations, general arrangement, and extent of Work.

B. The Contract Drawings are not intended to show every vertical or horizontal offset that may be necessary to complete the systems. Having piping, fittings, and ductwork fabricated and delivered in advance of making actual measurements shall not be sufficient cause to avoid making offsets or other changes as may be necessary to install piping and equipment.

C. Verify exact locations in the field, and coordinate with all other Contractors.

D. The Architect shall approve, in writing, significant deviations from the Drawings.

E. The Architect reserves the right to make minor changes in location that do not require additional labor or material, up to the time of roughing-in, without additional cost. The Architect reserves the right to determine what is "significant" and what is "minor."

F. If a conflict occurs between the Drawings and Specifications, immediately submit a written request for an interpretation or clarification from the Architect, who shall determine which interpretation has precedence.

G. Should overlap of work among the Trades become evident, immediately submit a written request for an interpretation or clarification from the Architect, who shall determine which interpretation has precedence. In such event, none of the Contractors shall assume that it is relieved of the Work that is specified under its branch unless instructions are received, in writing, from the Architect.

## 1.06 EXAMINATION OF SITE

A. Certain existing conditions may affect the manner or sequence of the performance of the Work. Existing services, structures, and operating schedules may need to be reviewed, prior to bidding, to facilitate the installation of the Work without disrupting the normal operation of the facility.

B. Before submitting its Bid, the Contractor should visit the site of the proposed Project. After receipt of Bids, no allowances will be made for lack of knowledge of Project conditions.

C. Verify and reconcile Work required by the Contract Documents with existing conditions at the Site.

D. Should the Contractor note any discrepancies during the Bidding Period, it shall notify the Construction Manager immediately, in writing, to permit issuance of an Addendum to prevent misunderstandings at a later date.

## 1.07 APPLICABLE CODES, LICENSES, PERMITS, FEES, AND NOTICES

A. The Construction Manager will submit all Contract Drawings and Specifications to the City of Whitehall Building Department, pay for the Plan Examination fee, and obtain Plan Approval.

B. Contractor shall secure and pay for any **ADDITIONAL** permits, governmental fees, bonds, licenses, and inspections required for the proper execution and completion of the HVAC Work.

C. Contractor shall arrange and pay for all inspections required to obtain a Certificate of Beneficial Occupancy. Contractor shall include this cost in its bid.

D. If the Contractor observes that any of the Contract Documents are at variance therewith in any respect, it shall promptly notify the Architect in writing, and any necessary changes will be arranged by the Architect.

E. If the Contractor performs any Work knowing it to be contrary to such Laws, Ordinances, Rules, and Regulations, and fails to give prior notice to the Architect, the Contractor shall assume full responsibility for, and shall bear all costs associated with, correcting the Work.

## 1.08 CONTRACTOR'S RESPONSIBILITY

A. Provide a Superintendent, on site, whose duties include the directing and supervising of work. Inform the Construction Manager of the Superintendent's name and phone number, and the method of contact when the Superintendent is not at the site.

B. As soon as possible after the Award of the Contract and the approval of Shop Drawings, the Contractor shall place orders for materials and equipment required for its Work. Immediately inform the Construction Manager in writing as to any materials and equipment that cannot be obtained within the required time period, either due to conditions of the market or other governing factors.

C. Inspect each item of materials or equipment immediately prior to installation. Reject damaged and defective items.

D. Contractor shall determine erection procedures and sequence the construction to keep its work on schedule and to ensure the safety of the building and its occupants. This includes supplying any temporary bracing, guys, or tie-downs that might be required. Such materials shall remain the Contractor's property after completion of the Project.

E. Provide attachment and connection devices and methods for securing work. Secure all work true to line and level and within recognized industry tolerances. Allow for expansion and building movement.

F. Recheck measurements and dimensions of the Work as an integral step of starting each installation.

G. Where mounting heights are not indicated, individual units generally can be mounted at industry-recognized standard mounting heights for the particular application indicated. However, the Architect must approve all mounting heights.

H. Coordinate the enclosure or concealment of the Work with the required inspections and tests so as to minimize the necessity of uncovering work for that purpose.

## 1.09 COORDINATION OF WORK

A. Contractor shall coordinate its Work carefully with all other Contractors.

B. Contractor shall read the entire Specification covering other branches of the Work. It will be held responsible for the coordination of its work with the work performed by other Trades.

C. Coordinate locations of all HVAC Work with sprinklers, piping, hangers, lighting fixtures, smoke and heat detectors, speakers, occupancy sensors, conduits, cable trays, and other equipment, and with ceilings, soffits, structural members, joists, metal decks, bracing, etc.

D. Consult all Contract Drawings that may affect the location of any equipment, apparatus, piping, and ductwork, and make any other adjustments in location as necessary to secure coordination.

E. Contractor shall be responsible for the cost of additional engineering work required for changes to the work as shown or described, due to the relocation of items requested by the Contractor.

F. Do not install work without first coordinating the layout, routing, etc., with other Contractors whose work may be affected.

G. Review all equipment nameplate ratings and advise the Architect immediately of any system design changes required to wire the equipment properly.

## 1.10 UTILITIES AND OUTAGES

A. Locate all existing utilities prior to construction.

B. Where necessary, make minor relocations to permit installation of the HVAC Work.

C. Advise the Architect immediately of major conflicts to permit modification of the Contract Documents prior to bidding.

D. Closely coordinate any utility service shutdowns or outages, interruptions, or downtime with the Architect and Construction Manager.

E. Conform to all Utility Company requirements.

F. Avoid inconveniencing the Owner.

G. Provide temporary service during the curtailment, if required by the Architect.

H. Notify the Construction Manager at least (2) working days in advance of commencing work in the area of existing utilities.

I. Contractor shall alert occupants of nearby premises of any emergency conditions that arise as a result of its work in connection with existing utilities.

J. Record the location of all concealed utilities on the Record Drawings.

## 1.11 PROJECT RECORD DOCUMENTS

A. Contractor shall maintain, at the job site, (1) copy of the following items related to its Trade:
   1. Contract Drawings.
   2. Specifications.
   3. Addenda.
   4. Reviewed Shop Drawings.
   5. Change Orders.
   6. Other modifications to Contract.
   7. Field Test Records.
   8. Minutes of Coordination and Progress Meetings.
   9. (1) set of the Contract Drawings that will be used for Record (as-built) Drawings. This set shall be used exclusively for documenting and recording the exact location of all installed Work.

B. Do not use record documents for construction purposes.

C. Store record documents in temporary field office, apart from documents used for construction.

D. Provide files and racks for storage of record documents.

E. Maintain record documents in clean, dry, legible condition.

F. Use red ballpoint pen for all marking of record documents.

G. Make record documents available at all times for inspection by the Architect and Construction Manager.

H. Record Drawings:
   1. Record Drawings shall be legibly marked to record actual construction with the following information:
      a. Horizontal and vertical location of underground utilities and appurtenances referenced to permanent surface improvements.
      b. Location of internal utilities and appurtenances concealed in construction referenced to visible and accessible features of structure.
      c. Field changes of dimension and detail.
      d. Changes made by Field Work Order or Change Order.
      e. Details not on the original Contract Drawings.
   2. Do not permanently conceal any work until the required information has been recorded. This especially applies to site utilities.
   3. Record deviations in locations of concealed piping, valves, ductwork, equipment, and all buried or concealed utility lines and services, etc., dimensioned from a fixed control point, including the following:
      a. Depth of bury.
      b. At each change of direction.
      c. At each change of slope.
      d. As required for further reference.
   4. Minor piping or ductwork variations need not be recorded.

5. Record locations of abandoned piping or ductwork.
6. Record deviations made necessary to incorporate equipment different from the Design Base equipment.
7. Record all Addendum Items.
8. Add valve tag numbers to the Record Drawings.
9. At completion of project, the Contractor shall deliver (1) copy of its Record Drawings to the Construction Manager.
10. Contractor shall accompany its Record Drawings with a transmittal letter, in duplicate, containing the following information:
    a. Date.
    b. Project title and number.
    c. Contractor's name and address.
    d. Title and number of each record document.
    e. Certification that each document as submitted is complete and accurate.
    f. Signature of the Contractor or its Authorized Representative.

## 1.12 GUARANTEES AND WARRANTIES

A. Contractor shall guarantee its equipment, workmanship, and materials for a period of (1) year from the date of Contract Completion. Should defects develop within this period, the Contractor shall, at no cost to the Owner, remedy the defects and reimburse the Owner for all damage to other Work caused either by the defects or as a result of the work of correcting the same.

B. Refer also to Division 01 and other Specification Sections that define the starting date of the guarantee period, or that discuss either additional warranty requirements, or extended equipment warranties beyond the standard period.

C. Post-Warranty Service:
    1. The products and Manufacturers identified throughout these Specifications represent reputable suppliers that generally have an inventory of spare parts, and a network of authorized service providers that can support the products installed on this Project.
    2. Contractor shall assist the Owner for a period of (7) years in obtaining parts and service on the products installed, for a reasonable charge.
    3. Once the Contractor's 1-year warranty has expired, the Owner will pay the cost of these parts and service.
    4. If the item cannot be repaired, the Contractor shall recommend an equivalent replacement item at a reasonable cost to the Owner.

## 1.13 ABBREVIATIONS AND SYMBOLS

A. Titles and abbreviations may be used in these Specifications. Abbreviations may be shown on the HVAC Drawings. Refer to the list of abbreviations attached to this Section. Refer also to the symbols lists shown on the Drawings, and to the 2013 American Society of Heating, Refrigerating, and Air Conditioning Engineers Handbook (Chapter 37, "Fundamentals") for

further abbreviations. All titles and abbreviations may not necessarily apply to this Work.

## 1.14 DEFINITIONS

A. "Provide": To furnish, install, and connect to make completely ready for regular operation.

B. "Furnish": To supply or deliver to site complete with all required accessories and installation instructions.

C. "Install": To mount, erect, hang, or fasten in place, and connect to make ready for regular operation.

D. "Concealed": Either embedded in masonry or other construction, or installed below floor slab, behind wall furring, within chases or soffits, within walls, within double partitions, above ceilings, in trenches, in tunnels, or within crawl spaces.

E. "Exposed": In full or partial view; not "Concealed" as defined above.

F. "Accessible Ceiling": Lay-in ceiling with removable ceiling tiles.

G. "Piping": Pipe, fitting, flanges, valves, controls, specialties, hangers, bracing, insulation, and other items required or necessary.

H. "Ductwork": Ducts and fittings, dampers, vanes, controls, hangers, bracing, insulation, and other items required or necessary.

I. Refer to additional Definitions in Division 01 and in the State Building and Mechanical Codes.

# PART 2 PRODUCTS

## 2.01 DESIGN BASE MANUFACTURER STANDARD

A. The Drawings and Specifications reflect a design based on the specific equipment requirements and configuration for a Design Base Manufacturer. Design coordination of equipment with the building and with other Trades has been made for this specific Model and Manufacturer of equipment. Where several Manufacturers are listed for an item of equipment or material, the first-named shall be considered the Design Base Manufacturer Standard.

## 2.02 OTHER ACCEPTABLE COMPONENTS (MANUFACTURERS)

A. Other Manufacturers listed in the Specifications shall be acceptable; however, whenever the Contractor elects to furnish specified equipment or material manufactured by other than the Design Base Manufacturer, the Contractor shall be responsible for the cost and coordination of all modifications required to accommodate the elected equipment or material, including any Work of other Trades that might be affected. Where changes to other Trades' Work are required, the Contractor shall include the additional costs of all such Work in its bid.

B. Any specified Equipment Manufacturer furnished by the Contractor, other than the Design Base Manufacturer, shall be, in the opinion of the Architect, equivalent in quality, design, features, performance, arrangement, and appearance to that of the Design Base equipment or material, including any special features or requirements.

C. The inclusion of other Manufacturers in these Specifications shall not be construed to infer that each Manufacturer's product has been reviewed by the Architect for this application, or that it will provide all the features or capabilities required, or that its physical dimensions can be accommodated in the available space. Verify that the proposed equipment will provide all features and accommodations provided by the Design Base Manufacturer, and that it will fit in the available space.

D. Where deemed necessary by the Architect, the Contractor shall, at no additional cost to the Owner, prepare layouts for these other brands of equipment that may have different dimensional or service requirements from the Design Base Manufacturer Standard. Submit these layouts to the Engineer for review.

E. Reimburse the Owner for the cost of any design changes incurred by the Architect in the preparation of revised Drawings or Specifications to accommodate the use of any Manufacturer other than the Design Base Manufacturer.

F. The Architect will not give consideration to any other Manufacturer that the Contractor proposes to use, unless the Architect approves the Manufacturer, and specifically names the Manufacturer in the Addenda to the Specifications.

## 2.03 SUBSTITUTIONS

A. Contractor shall submit information for review no later than (10) days prior to the bid opening to the Construction Manager on any other proposed equipment or material that the Contractor desires to use.

B. Contractor shall be responsible for the same costs of coordination and modifications, etc., listed above in Paragraph 2.02, "Other Acceptable Components (Manufacturers)."

C. If the Architect determines that the proposed Manufacturer is acceptable, the Architect will issue an Addendum adding that Manufacturer to the Specification.

## 2.04 EQUIPMENT SUITABILITY

A. All equipment provided shall perform as intended. All items listed shall function properly, and as the Manufacturer intended. Install equipment according to the Manufacturer's recommendations. Properly attach equipment to the floor, wall, or structure. Each item of equipment shall be compatible with all other accessories or hook-ups, including piping,

ductwork, flues, controls, wiring, and other equipment not furnished by the equipment Manufacturer, but required to achieve the intended function.

## 2.05 MISCELLANEOUS ACCESSORIES

A. Provide any additional adapters, fittings, trim, structural steel angles, channels, unistrut, brackets, etc., as necessary to securely install all items of equipment specified or shown on the Drawings. All steel installed outside or exposed to moisture shall be hot-dipped galvanized.

B. These accessories are required even though they may not be shown or detailed on the Drawings.

C. Installation shall be compatible with the building construction on which the item is to be located.

D. Verify the type of construction prior to ordering the equipment item, so that all required accessories are included.

## 2.06 QUANTITIES

A. Equipment may be referred to in these Specifications, or on the Drawings, as either singular or plural; the Contractor shall verify the exact number of items required to complete its Work.

# PART 3 EXECUTION

## 3.01 EQUIPMENT PROTECTION

A. Unless equipment and material can be protectively stored in a manner acceptable to the Architect, they shall not be delivered to the site until the Work is ready to receive them.

B. Protect all equipment and materials during construction from damage by weather, water, dirt, paint droppings, welding and cutting spatters, and other construction activities.

C. All materials or equipment stored outside shall be elevated and protectively covered in a secured and locked area.

D. Store materials and equipment sensitive to weather or construction conditions inside. Where necessary, store sensitive equipment in a heated area.

E. During construction, cover all motors, bearings, controls, and other items that are susceptible to damage until they can be installed in place.

F. Immediately repair or replace damaged equipment or materials to the satisfaction of the Architect and at no additional cost to the Owner.

G. Contractor shall protect the building and other Contractors' material and equipment from damage caused by its Work. Protect floors from cutting oil and chips.

H. Use all means necessary to protect materials before, during, and after installation.

I. Refer also to individual Specification Sections for specialized protection.

## 3.02 SAFETY

A. Maintain Project in accordance with Federal, State, and Local Safety and Insurance Standards. All procedures shall comply with the latest regulations of the Occupational Safety and Health Administration (OSHA).

B. Contractor shall provide eye and ear protection, as approved by OSHA, for each of its employees.

C. Contractor shall be solely responsible for construction means, methods, techniques, sequences, procedures, and safety precautions and programs in connection with the Work. The Owner, Construction Manager, Architect, or Engineer will not be responsible for the Contractor's failure to employ proper safety procedures.

D. Contractor shall be solely responsible for the structural design of all temporary items that it uses in the construction of the building, or that become a permanent part of the building, including, but not limited to, hoisting, the temporary bracing for structural steel, and the shoring for concrete and masonry work, cut earth banks, suspended ceilings, equipment, walls, etc.

E. Exercise precaution for the protection of persons and property. Provide guard rails, barricades, enclosures, canopies, passageways, lanterns, warning lights, and other protective safety devices as necessary or required by the Code Authorities having Jurisdiction, and as required to protect persons and property against accidentally dropped materials or other construction hazards. Provide guard lights at all barricades, railings, obstructions in the streets or sidewalks, trenches, or pits.

F. Provide protection as may be required to prevent glass breakage. Replace broken glass at no cost to the Owner.

G. Hazards Control:
   1. Do not dispose of volatile wastes, such as mineral spirits, oil, or paint thinner, in storm or sanitary drains.
   2. Store volatile wastes in covered metal containers, and remove from premises daily.
   3. Prevent accumulation of waste that creates hazardous conditions.
   4. Provide adequate ventilation during use of volatile or noxious substances.

## 3.03 AIR HANDLING PLENUMS

A. Where space is used for air handling, such as above ceilings and elsewhere, do not install combustible or noxious materials.

B. All materials shall be listed for use in air handling plenums. All wiring shall be UL 910-listed.

## 3.04 EQUIPMENT ACCESS

A. Locate all units to provide sufficient access to operate equipment, change filters, pull coils, or service other items requiring periodic maintenance. Coordinate with structure and with all other Contractors' work.

## 3.05 ACCESS PANELS

A. Unless otherwise noted, furnish all access panels required for concealed HVAC work to the General Trades Contractor for installation.

B. Provide all other access panels as needed.

C. Mark locations of access panels on the Record Drawings.

## 3.06 BLOCK COURSE COORDINATION

A. The mounting heights of items are called out on the Drawings for many items. Adjust equipment mounting heights to accommodate brick or block coursing. Coordinate installation of all items in a masonry wall with the General Trades Contractor and Architect.

## 3.07 CUTTING AND PATCHING

A. All cutting and patching shall be accomplished in a neat and workmanlike manner, acceptable to the Architect.

B. Cutting:
   1. Contractor shall perform all cutting required for installing its own Work unless otherwise noted.
   2. Cutting shall be done with such tools and methods so as to prevent unnecessary damage to surrounding areas and equipment.
   3. Use rotary drills where the cutting of holes through concrete, brick, plaster, or tile is necessary.
   4. No cutting shall be done that will, in any way, reduce the structural strength of the building. Cutting of structural support beams, joists, plates, or other structural members is strictly prohibited without the specific written consent of the Construction Manager, Architect, and Structural Engineer. Should such cutting be necessary, consult the Architect and do not proceed further without written approval of the Architect.

C. Patching:
   1. Contractor shall be responsible for patching except as otherwise noted.
   2. Only a qualified Finish Tradesman, skilled in the respective craft required, shall perform patching.
   3. Patching shall match adjacent surface construction.
   4. Materials and equipment used in the patching work shall comply with requirements of other Sections of this Specification.

D. All cutting and patching shall be done promptly, and all repairs shall be made as necessary to leave the entire Work in good condition, including all cutting, fitting, and drilling of masonry, concrete, metal, wood, plaster, and other materials as specified or required for proper assembly, fabrication, installation, and completion of the Work.

E. Coordinate drilling, welding, etc., and method of attachment to columns, joists, beams, etc., with the General Trades Contractor before proceeding.

F. If a Contractor finds it necessary to cut into Work of another Contractor, the cutting and patching shall be performed by such other Contractor at this Contractor's expense. With the written consent of the Architect, the Contractor shall be allowed to perform the cutting. Patching shall be similarly executed.

G. Precast Concrete Work:
   1. Contractor shall coordinate any holes it requires in precast concrete work with the General Trades Contractor during the precast shop drawing process.
   2. In lieu of sleeves in precast concrete work, cut holes after erection of concrete.
   3. Verify with the Architect that all openings to be field-cut are in conformance with the Precast Manufacturer's specifications before any cutting or drilling proceeds.

H. Roofing:
   1. General Trades Contractor shall be responsible for all cutting of roofing, roof opening framing, or roof repair work.
   2. A qualified Roofing Contractor shall perform all work in a manner such that any existing roof warranties are not voided.
   3. General Trades Contractor shall install roof pipe boots and roof pipe boots flashing, and repair roofing. Contractor shall furnish pipe boots.
   4. Roof curbs: Refer to Section 23 05 29, "Hangers and Supports for HVAC Piping and Equipment."
   5. General Trades Contractor shall provide insulated cap and flashing, and repair roofing, for HVAC items, including, but not limited to, supply and return ducts, roof curbs and rails, refrigerant piping, etc.

I. General Trades Contractor shall cut and frame all roof and exterior wall openings in new construction as required for HVAC items, including, but not limited to, ducts, exhaust fans, refrigerant piping, etc.

J. General Trades Contractor, or other Tradesman approved by the Architect, shall replace floors, ceilings, roofs, etc., damaged during construction. The cost of repairs shall be borne by the Contractor causing damage.

K. General Trades Contractor shall provide openings, with lintels if needed, for sleeves, piping, ducts, louvers, grilles, panels, and other similar openings in new interior masonry walls and floors. Locate and dimension the opening for the General Trades Contractor prior to construction.

L. Remove and replace masonry, drywall, ceilings, and ceiling tiles as required to install HVAC Work.

M. Contractor shall be responsible for construction that is disturbed during the installation of piping, ductwork, conduit, fixtures, or equipment.

N. Cutting and patching includes remodeling and repairing of previously graveled or paved areas, walks, curbs, sod, floors, etc., as may be required. Saw cuts shall be done in neat, straight lines.

O. Contractor shall repair or replace any roads, sidewalks, or other items that its employees may damage during the performance of this Work.

P. Refer to Section 01 73 29, "Cutting and Patching," for additional requirements.

## 3.08 PAINTING AND RELATED WORK

A. **ALL PAINTING SHALL BE DONE BY A QUALIFIED TRADESMAN SKILLED IN THE CRAFT.**

B. General Trades Contractor shall be responsible for finish painting of walls, ceilings, and other Architectural items in the areas of new and existing construction.

C. Contractor shall repaint any previously finished areas or existing areas disturbed by its own cutting and patching. Painting of the patched area shall match color of the adjacent construction in the general area of the patch. Repaint the entire wall-to-wall and floor-to-ceiling surface if, in the opinion of the Architect, a uniform appearance cannot be accomplished by touch-up.

D. Clean, spot-prime with zinc chromate, and finish equal to the original quality, any factory-finished equipment that has rusted, has been damaged, or has deteriorated. Repaint the entire surface if, in the opinion of the Architect, a uniform appearance cannot be accomplished by touch-up.

E. Clean, remove rust from, and paint with zinc-chromate primer, any HVAC support steel and bare ferrous metal that is not factory-painted, shop-painted, or galvanized, and that remains exposed to view in the finished areas of the building, including mechanical/electrical rooms and storage rooms. Consult with the General Trades Contractor to ensure that the prime coat shall be compatible with the finish coat.

F. Clean, remove rust from, and paint with zinc-chromate primer and aluminum-bronze paint, all steel hangers, boxes, straps, and rods, furnished under this Contract, that are not provided with rust-protective finish or are damaged in installation, and that remain exposed to view or are in unfinished and mechanical spaces.

G. Paint with a prime coat any ferrous metal installed outside the building that is not factory-painted, shop-painted, or galvanized.

H. Paint exposed piping, valves, etc.

I. Clean all new insulation coverings. If pre-sized insulation is not used, insulation coverings shall be sized if finish painting is required.

J. Refer to Section 09 91 00 for additional requirements.

## 3.09 CLEANING

A. Maintain all work areas in a neat and orderly manner, free of debris. Clean up all occupied travel areas at the end of each shift, or immediately after use for material removed.

B. It is the intent of the Specifications that each Contractor and Subcontractor shall do its own cleanup, move materials that are in the way of construction, repair and replace any damage it does, and do any other work of a similar nature which must be done.

C. Equipment cleaning and touch-up:
   1. Use only cleaning materials recommended by Manufacturer of the surface to be cleaned.
   2. Clean interiors of all enclosures of dirt and debris before installing trim or covers.
   3. Brush-clean, prime, and paint-in-kind rust spots on any part.
   4. Clean all gauges, thermometers, traps, dirt legs, strainers, and fittings.

D. Final cleaning:
   1. Repair, patch, and touch up all scratched or damaged surfaces to specified finish to match adjacent surfaces, before final acceptance of the work. Repair dents and marred finishes to the satisfaction of the Architect. Prepare for finish painting, where painting is specified.
   2. Thoroughly clean all fixtures, material, finished surfaces of equipment, painted, enameled, or varnished work, and all other exposed finished surfaces, removing all labels, stickers, marks, stains, fingerprints, spots, rust, oil, grease, dirt, dust, and other foreign materials, so that the Work is presented in a complete and finished condition, ready for acceptance and intended use.
   3. Employ experienced workers, or professional cleaners, for final cleaning.
   4. Verify that all drains are free of debris.
   5. Expedite the cleaning, washing, waxing, and polishing required within other Sections of these Specifications.

E. Refer to Section 01 74 19, “Construction Waste Management and Disposal,” for additional requirements.

## 3.10 TESTS AND INSPECTIONS

A. The Contract Documents, Laws, Ordinances, Rules, Regulations, or Orders of any Code Authority having Jurisdiction may require the Work to be inspected, tested, or approved.

B. Arrange for inspection of the Work by the Code Authority having Jurisdiction. Inspections shall be conducted by the City of Whitehall Building Department.

C. Notify the Construction Manager of all scheduled tests and adjustments at least (48) hours before they are scheduled, so that the Construction Manager may witness same. If the Contractor performs any test or adjustment without the Construction Manager present, or without proper notification, the Contractor shall perform the test or adjustment a second time, in the presence of the Construction Manager. Coordinate all test schedules with the Construction Manager.

D. Concealed lines shall be tested and approved before being concealed. If a leak appears during the final test, repair the line and any damage resulting from the leak.

E. After Work has been completed, but before pipe covering has been applied, test each system as required by other Sections of this Specification. At the test pressures, the circulation shall be free and the piping shall be proven free of leaks.

F. Provide all required testing and obtain approvals. Secure required certificates of inspection, testing, or approval, and include them in the Operating and Maintenance manuals.

G. Contractor shall bear all costs of such inspections, tests, or approvals.

H. Should any of the Work be covered up or enclosed prior to completion of all required inspections and approvals, uncover the Work as required and, after it has been completely inspected and approved, make all repairs and replacements with such materials and workmanship as are necessary to secure the approval of the Architect, and at no additional cost to the Owner.

I. Furnish all test pumps, gauges, equipment, and personnel required, and test as necessary, to demonstrate the integrity of the finished installation to the approval of the Code Authority having Jurisdiction and the Architect.

J. Check each piece of equipment for defects and verify that all parts are properly furnished and installed, that all items function properly, and that all adjustments have been made.

K. Refer to Section 23 05 93, “Testing, Adjusting, and Balancing for HVAC,” for additional requirements.

## 3.11 FACTORY INSTALLATION AND START-UP

A. For those items of equipment that are to be installed, tested, started up, and certified by a factory-trained Representative, furnish a letter from the Manufacturer to the Architect stating that this service shall be provided for this Project, describing the scope of services to be provided, and disclosing the name of the Representative assigned to provide the required services.

# TITLES, ABBREVIATIONS, AND SYMBOLS

| | |
|---|---|
| & | And |
| @ | At |
| ∠ | Angle |
| Ø | Diameter |
| # | Number |
| Ø | Round OR Phase |
| A. | Compressed air |
| A.D. | Access door OR Area drain |
| A.F.D. | Acid floor drain |
| A.F.F. | Above finished floor |
| A.P. | Access panel |
| A.W.C.O. | Acid wall cleanout |
| AABC | Associated Air Balance Council |
| AB. | Above |
| ACI | American Concrete Institute |
| ACPA | American Concrete Pipe Association |
| ADA-AG | Americans with Disabilities Act — Accessibility Guidelines |
| ADC | Air Diffusion Council |
| AFCI | Arc-fault circuit interrupter |
| AH | Air handler |
| AHRI | Air-Conditioning, Heating, and Refrigeration Institute |
| ALT. | Alternate |
| ALUM. | Aluminum |
| AMCA | Air Movement and Control Association |
| amp | ampere |
| ANSI | American National Standards Institute |
| APPROX. | Approximately |
| ARCH. | Architect |
| ARR'T. | Arrangement |
| ASA | Acoustical Society of America |
| ASHRAE | American Society of Heating, Refrigerating, and Air Conditioning Engineers |
| ASME | American Society of Mechanical Engineers |
| ASPE | American Society of Plumbing Engineers |
| ASSE | American Society of Sanitary Engineering |
| ASTM | American Society for Testing & Materials |
| AUTO. | Automatic |
| AV | Acid vent |
| AW | Acid waste |
| AWG | American wire gauge |
| AWS | American Welding Society |
| AWWA | American Water Works Association |
| B.D.D. | Backdraft damper |
| B.T. | Bathtub |
| B.V. | Backwater valve |
| BAL. | Balancing |
| BFP | Backflow preventer |
| BHP | Brake horsepower |
| BICSI | Building Industry Consulting Services International |
| BLDG. | Building |
| BSBD.RAD. | Baseboard radiation |
| BSMT. | Basement |
| BTM. | Bottom |
| BTU | British thermal unit |
| c. | Conduit |
| C.B. | Catch basin |
| C.I. | Cast iron |
| C.O. | Clean out |
| C/C | Center to center |
| C/L | Center line |
| CAB. | Cabinet |
| CAP. | Capacity |
| CEIL./CLG. | Ceiling |
| CFC | Chlorofluorocarbon |
| CFH | Cubic feet per hour |
| CFM | Cubic feet per minute |
| CFR | Code of Federal Regulations |
| CGA | Compressed Gas Association |
| CHEM. | Chemical |
| CISPI | Cast Iron Soil Pipe Institute |
| COL. | Column |
| COMB. | Combination |
| CONC. | Concrete |
| COND. | Condensate OR Condenser |
| CONN. | Connection OR Connect |
| CONST. | Construction |
| CONTR. | Contractor |
| CONV. | Convector OR Converter |
| COORD. | Coordinate |
| CSA | Canadian Standards Association |
| CSI | Construction Specifications Institute |
| CT | Current transformer |
| CU. FT. | Cubic feet |
| CU IN. | Cubic inch |
| CUH | Cabinet unit heater |
| D. | Deep |
| D.F. | Drinking fountain |
| D.L. | Door louver |
| D.M. | Damper motor |
| D.S. | Downspout |
| DB | Dry bulb |
| DBL. | Double |
| DCW | Domestic cold water |
| DET. | Detail |
| DHW | Domestic hot water |
| DHWR | Domestic hot water return |
| DIA. / Ø | Diameter |
| DIFF. | Diffuser |
| DIM. | Dimension |
| DISCH. | Discharge |
| DN. | Down |
| DOE | United States Department of Energy |
| DPR. | Damper |
| DR. | Door |
| DW | Distilled water |
| DWG. | Drawing |
| DWH | Domestic water heater |
| DWV | Drain, waste and vent |
| E.A.T. | Entering air temperature |
| E.C. | Electrical Contractor |
| E.S.P. | External static pressure |
| E.T. | Expansion tank |
| E.W.T. | Entering water temperature |
| EA. | Each |
| EFF. | Efficiency |
| EIA | Electronic Industries Alliance |
| ELEC. | Electric OR Electrical |
| ELEM. | Element |
| ELEV. | Elevation |
| ENGR. | Engineer |
| ENT. | Entering |
| EPA | Environmental Protection Agency |
| EQUIP. | Equipment |

| | |
|---|---|
| ETL | Electrical Testing Laboratories |
| EW | Eye wash |
| EWC | Electric water cooler |
| EXH. | Exhaust |
| EXIST. | Existing |
| EXT. | Exterior |
| F & T | Float and thermostatic |
| F. | Fan OR Fire |
| F.D. | Fire damper |
| F.E. | Fire extinguisher |
| F.E.C. | Fire extinguisher cabinet OR Food Service Equipment Contractor |
| F.H. | Fire hydrant |
| F.H.C. | Fire hose cabinet |
| F.H.E.C. | Fire hose/extinguisher cabinet |
| F.V. | Flush valve |
| FCC | Federal Communications Commission |
| FD | Floor drain |
| FDA | Food and Drug Administration |
| FHA | Federal Housing Administration |
| FIG. | Figure |
| FIN. | Finish |
| FIN.RAD. | Finned radiation |
| FLEX. | Flexible |
| FLR. / FL. | Floor |
| FMG | Factory Mutual Global |
| FOR | Fuel oil return |
| FOS | Fuel oil supply |
| FPC / FSC | Fire Protection / Fire Suppression Contractor |
| FPM | Feet per minute |
| FT. | Feet |
| FT.HD. | Feet of head |
| FURN. | Furnish(ed) |
| G | Gas |
| G.C. | General Contractor |
| G.I. | Grease interceptor |
| G.T.C. | General Trades Contractor |
| gal. | Gallon |
| GALV. | Galvanized |
| GEN. | General |
| GFI | Ground fault interrupter |
| GPM | Gallons per minute |
| GR | Grille |
| Grd. | Ground |
| GRAV. | Gravity |
| H./HT. | Height |
| H.P. | High pressure |
| H.S. | Hair strainer |
| H'STAT | Humidistat |
| HAC | Heating and air conditioning |
| HB | Hose bibb |
| HCFC | Hydrochlorofluorocarbon |
| HHS | United States Department of Health and Human Services |
| HORIZ. | Horizontal |
| HP | Horsepower |
| HPC | High pressure steam condensate |
| HPS | High pressure steam |
| hr. | Hour |
| HTG. | Heating |
| HTR. | Heater |
| HUD | United States Department of Housing and Urban Development |
| HV | Heating and ventilating OR High velocity |
| HVAC | Heating, ventilating, and air conditioning |
| I.D. | Inside diameter |
| IAQ | Indoor air quality |
| ICC | International Code Council |
| ICEA | Insulated Cable Engineers Association, Inc. |
| IDF | Intermediate distribution frame |
| IEC | International Electrotechnical Commission |
| IEEE | Institute of Electrical and Electronics Engineers, Inc. |
| IESNA | Illuminating Engineering Society of North America |
| IN. | Inside OR Inches |
| IND. | Indirect |
| IND. U. | Induction unit |
| INSUL. | Insulation |
| INT. | Interior |
| INV. | Invert |
| INV. ELEV. | Invert elevation |
| IPS | Iron pipe size |
| ISO | International Organization for Standardization |
| J.R. | Janitor's receptor |
| JCAH | Joint Commission for Accreditation of Hospitals |
| kVA | Kilovolt-ampere |
| L. | Length |
| L.A.T. | Leaving air temperature |
| L.W.T. | Leaving water temperature |
| LAB | Laboratory |
| LAV | Lavatory |
| lb. | pound |
| LEED | Leadership in Energy and Environmental Design |
| LH | Left hand |
| LP | Liquefied petroleum |
| LPC | Low pressure steam condensate |
| LPS | Low pressure steam |
| LV'G. | Leaving |
| M.A. | Mixed air |
| M.O. | Motor operated |
| MAN. DPR. | Manual damper |
| MAT. | Material |
| MAX. | Maximum |
| MBH | 1,000 British thermal units/hour |
| MECH. | Mechanical |
| MET./MTL. | Metal |
| MEZZ. | Mezzanine |
| MFR. | Manufacturer |
| MH | Manhole |
| MIN. | Minimum |
| MISC. | Miscellaneous |
| MPS | Medium pressure steam |
| MS | Motor starter |
| MSS | Manufacturers Standardization Society of the Valve and Fittings Industry Inc. |
| MTD./MT. | Mounted OR Mount |
| N.I.C. | Not in contract |
| N.T.S. | Not to scale |
| N2 | Nitrogen |
| N2O | Nitrous oxide |
| NADCA | National Air Duct Cleaners Association |
| NAECA | National Appliance Energy Conservation Act |
| NB | National Board of Boiler and Pressure Vessel Inspectors |
| NCPI | National Clay Pipe Institute |
| NEBB | National Environmental Balancing Bureau |
| NEC | National Electrical Code |
| NEMA | National Electrical Manufacturers Association |
| NESHAPs | National Emissions Standards for Hazardous Air Pollutants |
| NFPA | National Fire Protection Association |
| NIOSH | National Institute for Occupational Safety and Health |
| NIST | National Institute of Standards and Technology |

| | |
|---|---|
| NO. OR # | Number |
| NOM. | Nominal |
| NP | Not permitted |
| NPT | National Pipe Thread Tapered |
| NSF | National Sanitation Foundation |
| NSPE | National Society of Professional Engineers |
| O. | Oxygen |
| O.A. | Outside air |
| O.D. | Outside diameter |
| O.I. | Oil interceptor |
| O.V. | Outlet velocity |
| O/C | On center |
| OAC | Ohio Administrative Code |
| ODH | Ohio Department of Health |
| ODMH | Ohio Department of Mental Health |
| ODMR/DD | Ohio Department of Mental Retardation and Developmental Disabilities |
| ODOE | Ohio Department of Energy |
| ODOT | Ohio Department of Transportation |
| ODRC | Ohio Department of Rehabilitation and Correction |
| ODYS | Ohio Department of Youth Services |
| OPG. | Opening |
| OPP. | Opposite |
| ORC | Ohio Revised Code |
| OSHA | Occupational Safety and Health Administration |
| OU./OZ. | Ounce |
| P.D. | Pressure drop |
| P.I.V. | Post indicator valve |
| P/L | Property line |
| PDI | Plumbing & Drainage Institute |
| PEI | Petroleum Equipment Institute |
| PLBG. | Plumbing |
| PNEU. | Pneumatic |
| PRESS. | Pressure |
| PROP. | Propeller |
| PRV | Pressure-reducing valve |
| PSF | Pounds per square foot |
| PSI | Pound-force per square inch |
| PSIG | Pound-force per square inch gauge |
| PT | Plaster trap OR Potential transformer |
| PVC | Polyvinyl chloride |
| R | Register |
| R.A. | Return air |
| R.D. | Roof drain |
| R/W | Right of way |
| RAD. | Radius OR Radiation OR Radiator |
| RECIRC. | Recirculating |
| REG. | Register |
| REINF. | Reinforced |
| REL. | Relief |
| REQ'D. | Required |
| RH | Right hand |
| RHC | Reheat coil |
| RM. | Room |
| RPM | Revolutions per minute |
| RTA/C | Rooftop air-conditioning unit |
| RW | Raw water |
| RWC | Rainwater conductor |
| S | Sink |
| S & R | Supply and return |
| S. DPR. | Smoke damper |
| S.A. | Shock absorber OR Supply air |
| S.F. | Square feet |
| S.M., S/M | Sheet metal |
| S.P. | Static pressure |
| S.S. | Service sink OR Storm sewer |
| S.S., S/S | Stainless steel |
| SAN. | Sanitary sewer |
| SB | Shampoo bowl |
| SD | Shower drain OR Smoke detector |
| SECT. | Section |
| SHR. | Shower |
| SHT. | Sheet |
| SHT. MT'L. | Sheet metal |
| SMACNA | Sheet Metal and Air Conditioning Contractors National Association |
| SPEC. | Specification |
| SQ. | Square |
| SQ. FT. | Square feet |
| SQ. IN. | Square inch |
| ST | Sound trap |
| STAT | Thermostat |
| STD. | Standard |
| STL. | Steel |
| STM. | Storm |
| SUCT./S | Suction |
| SW | Softened water |
| SW. | Switch |
| T.W. | Tempered water |
| T'STAT | Thermostat |
| TD | Temperature difference |
| TEMP. | Temperature |
| THERM. | Thermometer OR Thermostat |
| TIA | Telecommunications Industry Association |
| TYP. | Typical |
| UC | Undercut |
| UH | Unit heater |
| UL | Underwriters Laboratories, Inc. |
| UR | Urinal |
| USGBC | United States Green Building Council |
| UV | Unit ventilator |
| V. | Vent |
| V.T.R. | Vent through roof |
| VAC. | Vacuum |
| VC | Vacuum cleaning |
| VCP | Vitrified clay pipe |
| VERT. | Vertical |
| VIB. ISO. | Vibration isolator |
| VOC | Volatile organic compound |
| VSP | Vitrified sewer pipe |
| W. | Width OR Water |
| W.G. | Water gauge |
| W/ | With |
| W/O | Without |
| W/W | Wall to wall |
| WAT. | Water |
| WB | Wet bulb |
| WC | Water closet OR Water column |
| WH | Wall hydrant OR Water heater |
| WO | Waste oil |
| WOG | Water/oil/gas |
| XFMR | Transformer |
| YD. | Yard |
| YH | Yard hydrant |

END OF SECTION 23 05 00

# SECTION 23 05 03

# HVAC LUBRICATION AND PACKING

## PART 1 GENERAL

### 1.01 DESCRIPTION

A. Contractor shall lubricate all the equipment that it furnishes with the correct grade, type, and quantity of lubrication before placing equipment and valves in service.

### 1.02 QUALITY ASSURANCE

A. Follow Equipment Manufacturer's recommendations for specific lubricants and application schedule.

### 1.03 SUBMITTALS

A. Incorporate lubrication instructions in Operating and Maintenance Manual.

## PART 2 PRODUCTS

### 2.01 LUBRICANTS

A. Refer to Manufacturer's recommended lubricants. Furnish equal lubricants as supplied by Castrol, Mobil, Shell, or the Owner's present supplier.

## PART 3 EXECUTION

### 3.01 INSTALLATION

A. Each shaft or valve stem containing a packing gland shall be checked for condition and examined for proper packing.

B. Maintain lubrication and packing seals during construction and ensure that, at the time of final acceptance, all are operating properly.

C. When filling systems initially for hydrostatic pressure tests, adjust valve packing glands to finger-tight and allow packing to absorb water for (5) minutes prior to tightening packing nuts.

D. Contractor shall repair any damage caused by improper lubrication of the equipment that it furnished, at no expense to the Owner.

END OF SECTION 23 05 03

# SECTION 23 05 04

# HVAC ACCESS PANELS

## PART 1 GENERAL

### 1.01 DESCRIPTION

A. Furnish all access panels where indicated on the Drawings, or where otherwise required to permit convenient access to concealed equipment, piping, traps, valves, coils, dampers, bearings, motors, filters, controls, or other devices requiring service, adjustment, or maintenance.

B. Coordinate closely with other Contractors to ensure that all panels furnished by the various Contractors shall be identical.

C. Plan panel locations to clear ceiling lights, grids, and obstructions, and to allow, wherever possible, full shoulder clearance beside the device to be inspected, adjusted, or repaired.

### 1.02 WORK NOT INCLUDED

A. Turn access panels over to the General Trades Contractor for installation. See Architectural Drawings for location.

## PART 2 PRODUCTS

### 2.01 ACCESS PANELS

A. Panels shall be 18 in. x 18 in. size unless larger panels are shown or required. Panels shall be steel construction (except where aluminum or stainless steel is specified) with overlapping edges and concealed hinge door with screwdriver lock. Mounting frames shall be compatible with the building construction material in which they are installed. Each access panel in fire-rated shaft walls and in fire-rated ceilings shall be B Label.

B. Manufacturer and Model Number listed below shall be considered to be the Design Base Manufacturer and Model Number.

C. Ceiling Access Panels:
   1. Gypsum: Inryco-Milcor Style DW. Prime-painted for finish painting with ceiling.
   2. Fire-rated: Inryco-Milcor Style ATR.
   3. Other Acceptable Manufacturers: Approved equal by Babcock-Davis, Inland-Ryerson, Bilco, Karp, Mitco, Cesco, Zurn, Mifab, JL, Milco, Larsen's Manufacturing Co., or Boico. Other Acceptable Manufacturers will be permitted, unless specifically excluded.

D. Wall Access Panels:
   1. Gypsum: Inryco-Milcor Style DW. Prime-painted for finish painting with wall.

2. Masonry and tile:
   a. Inryco-Milcor Style M Standard. Prime-painted for finish painting with wall.
   b. Inryco-Milcor Style M. Stainless steel.
3. Fire-rated: Inryco-Milcor. Fire-rated access panel, prime-painted for finish painting with wall.
4. Other Acceptable Manufacturers: Approved equal by Babcock-Davis, Inland-Ryerson, Bilco, Karp, Mitco, Cesco, Zurn, Mifab, JL, Milco, Larsen's Manufacturing Co., or Boico. Other Acceptable Manufacturers will be permitted, unless specifically excluded.

## PART 3 EXECUTION

### 3.01 PREPARATION

A. Determine specific locations and sizes for access panels needed, not indicated on the Drawings, to gain access to concealed equipment.

### 3.02 COORDINATION

A. Coordinate the location of each access panel with the General Trades Contractor, other Contractors, and equipment to permit access to devices requiring service, adjustment, or maintenance.

B. Advise other Contractors of specific requirements relating to access panel installation, including sizes of openings to receive access panel and frame, as well as locations of supports, inserts, and anchoring devices.

C. Coordinate, with other Contractors, the installation of access panels required to permit convenient access to concealed equipment, piping, traps, valves, coils, dampers, bearings, motors, filters, controls, or other devices requiring service, adjustment, or maintenance.

END OF SECTION 23 05 04

# SECTION 23 05 06

# HVAC SUBMITTALS

## PART 1 GENERAL

### 1.01 DESCRIPTION

A. Submittal dates:
   1. Within (14) calendar days after Award of Contract, submit complete materials list of all items proposed to be provided on this Project.
   2. Submit shop drawings within (28) days after Award of Contract.

B. Materials and equipment installed under the HVAC Contract shall meet all the requirements of the Contract Documents. Do not order or install materials or equipment until submittals are reviewed and approved by the Engineer.

C. Refer to the list at the end of this Section and to the Sections listed in Section 23 05 00, "Common Work Results for HVAC," Paragraph 1.01, for the items that the Contractor shall submit.

D. Submit complete copies of the catalog data or shop drawings for each manufactured item of equipment and all components to be used in the Work, including the following:
   1. Brand name.
   2. Catalog number.
   3. Specific performance data.
   4. Material description.
   5. Ratings.
   6. Capacity.
   7. Working pressure.
   8. Dimensional data.
   9. Material gauge or thickness.
   10. Wiring diagrams.
   11. General type.

E. Manufacturer's Catalog Sheets, Brochures, Diagrams, Schedules, Performance Charts, Illustrations, and Other Standard Descriptive Product Data: Contractor shall:
   1. Clearly mark or highlight each copy to identify pertinent materials, products, or models.
   2. Show dimensions and clearances required.
   3. Show performance and characteristics and capacities.
   4. Show wiring diagrams and controls.

F. Catalog data for equipment reviewed by the Engineer shall not take precedence over the requirements of the Contract Documents. Review by the Engineer shall not relieve the Contractor from the responsibility for deviations from Drawings or Specifications, nor from the responsibility for providing proper clearance and coordination with other Contractors.

G. When submitted for review, all shop drawings shall bear the Contractor's signed certification of the following:
   1. Contractor has reviewed, checked, and approved the shop drawings.
   2. Shop drawings have been coordinated with the requirements of the Project and with the provisions of the Contract Documents.
   3. Contractor has verified all field measurements, hands of equipment, and construction criteria, materials, catalog numbers, and similar data.

H. The Engineer's review is **ONLY** for conformance with the design concept of the Project and with the Contract Documents. Contractor shall be solely responsible for construction means, methods, techniques, sequences, procedures, and safety precautions and programs in connection with the Work.

## 1.02 SHOP DRAWINGS

A. Indicate arrangement of component parts, physical dimensions, materials, electrical and mechanical service requirements, colors (where required), controls, accessories, capacities, and performance characteristics.

B. Prior to submitting shop drawings, the Contractor shall stamp and sign its certification that the equipment shown on the submittals meets all the requirements of the Contract Documents. **UNSIGNED COPIES WILL NOT BE REVIEWED.**

C. Submit (8) copies, unless otherwise noted. Approved shop drawings shall be distributed as follows:

| QUANTITY | TO |
|---|---|
| 2 | Architect |
| 1 | Engineer |
| 1 | Construction Manager |
| 1 | Contractor |
| 3 | Operating and Maintenance Manuals |

   1. **NOTE:** At the Contractor's option, shop drawings may be submitted electronically in Portable Document Format (PDF). Contractor shall be responsible for making all copies for distribution and file.

## 1.03 CONTRACTOR RESPONSIBILITIES

A. Completely review Shop Drawings, product data, and samples prior to submission.

B. Determine and verify the following:
   1. Field measurements.
   2. Field construction criteria.

3. Catalog numbers and similar data.
4. Conformance with Specifications.
5. Hand of equipment.
6. Quantities and sizes.

C. Coordinate each submittal with requirements of the Work and the Contract Documents.

D. Notify the Engineer, in writing, at time of submission, of any deviations in the submittals from the requirements of the Contract Documents.

E. Contractor shall make submittals promptly in accordance with the approved schedule, and in such sequence as to cause no delay either in its Work or in the work of any other Contractor.

F. Immediately make any corrections or changes in rejected submittals as required by the Engineer and resubmit until accepted.

G. If the Contractor orders equipment or materials, or begins installation, fabrication, or work prior to return of approved submittals, it shall be “at the Contractor’s own risk.”

H. When (2) or more items of the same material or equipment are required, they shall be of the same Manufacturer.

I. Incorporate Shop Drawings into the Operating and Maintenance Manuals.

## 1.04 CERTIFICATIONS

A. Provide:
1. Test Agency results verifying capacities, operating conditions, and power requirements at design conditions.
2. Manufacturer’s statement of compliance with Standards discussed in individual Specification Sections.
3. Equipment labels indicating Certification requirements.
4. Quality standard designations on each unit piece, e.g., each pipe length, pressure vessel, or valve.
5. Typed verification that noted mixes, chemical compositions, and testing procedures were complied with.
6. Other Certifications listed in other Sections of the Specifications.

## 1.05 REQUIRED SUBMITTAL INFORMATION

A. The items listed below may not be a complete list of required submittals. Submit for approval all items to be provided, whether listed or not.

**KEY FOR REQUIRED SUBMITTALS**

A Catalog Cuts/Shop Drawings (8 copies).
B Operating and Maintenance Manuals (3 copies).
C Color samples (3 each).
D Product samples (2 each).
E Typed statement of material to be furnished.
F Typed verification of compliance with certification requirements.

G Test.
H Coordination Drawings.

(Submit number of copies indicated. If not indicated, submit full quantity of copies previously listed.)

| **HVAC SUBMITTALS REQUIRED** | **KEY** |
|---|---|
| Ceiling Access Panels | A |
| Wall Access Panels | A |
| Variable Speed Drives | A |
| Valves | A |
| Hangers | E-4 |
| Roof Curbs | A |
| Vibration Isolators | E-4 |
| Pipe-Coding Materials | D-2 |
| Valve-Tagging Materials | D-2 |
| Insulation | E-4 |
| Pipe | E-4 |
| Pipe Fittings | E-4 |
| Flexible Piping Connectors | A |
| Pumps | A |
| Air Vents | A |
| Pressure Gauges | A |
| Pressure/Temperature Taps | A |
| Strainers | A |
| Thermometers | A |
| Flexible Ductwork | A |
| Flexible Duct Connections | A |
| Duct Access Panels | A |
| Dampers | A |
| Extractors | A |
| Terminal Boxes | A |
| Grilles, Registers, and Diffusers | A, C |
| Filters | A |
| Temperature Controls | A |
| Dedicated Outdoor Air System (DOAS) Units | A |
| Variable Refrigerant Flow (VRF) Heat Pumps | A |
| VRF Fan Coil Units | A, C |
| Cabinet Unit Heaters | A, C |
| Painting Materials | A, C |
| Sheet Metal Drawings | A |
| Suppliers and Manufacturers List | E-4 |
| Equipment Contract | F-1 |
| Air and Water Balancing Report | A |
| Concrete Tests | F-2 |
| Valve-Tagging Chart | D-2 |

Copy of Start-Up Services Agreement for VRF System
and DOAS Units .....F-1
Heat Pump Compressor Warranty.....F-2
Rooftop Unit Compressor Warranty.....F-2
Operating and Maintenance Manuals (Refer to Section 23 05 07).....B-3
Insulation Subcontractor.....E-4
Sheet Metal Subcontractor .....E-4
Temperature Controls Subcontractor .....E-4
Test and Balance Subcontractor .....E-4

END OF SECTION 23 05 06

# SECTION 23 05 07

# HVAC OPERATING AND MAINTENANCE MANUALS

## PART 1 GENERAL

### 1.01 RELATED DOCUMENTS

A. Section 01 77 00, “Closeout Procedures.”

B. Section 01 78 39, “Project Record Documents.”

C. Section 23 05 60, “Requirements for Completion of HVAC Work.”

### 1.02 DESCRIPTION

A. Compile Operating and Maintenance Manual upon completion of the Work, and as required for final acceptance. Submit draft of Operating and Maintenance Manual to the Construction Manager for review and approval (90) days before Contract Completion.

B. Submit final corrected Operating and Maintenance Manual (7) days before Contract Completion.

C. Upon approval, provide (3) Operating and Maintenance Manuals.

## PART 2 PRODUCTS

### 2.01 OPERATING AND MAINTENANCE MANUALS

A. The following items, together with any other pertinent data, shall be included in each Operating and Maintenance Manual. This list is not necessarily complete and shall be used only as a guide. Format of manual to be as follows:

1. Operating and Maintenance Manuals shall be loose-leaf, 3-ring, hardcover binders, no larger than 11 in. wide x 12 in. high. Material shall be typewritten or printed, and be fully legible. Each section shall be divided by labeled tabs.
2. Cover:
   a. Title of Project.
   b. Date of Project completion.
   c. Name and address of the Owner.
   d. Date of submittal.
   e. Name and address of the Contractor.
   f. Name and address of the Architect.
   g. Name and address of the Engineer.
3. Second Page: Index.
4. First Section: A copy of each shop drawing and approval submittal with an index at the beginning of the section.
5. Second Section:
   a. A list of all equipment used on the job.

b. Parts list with numbers of replaceable items, including sources of supply.
c. Manufacturers' and nearest Factory Representatives' names and addresses.
d. Model and Serial numbers of components of systems installed.
e. Routine and 24-hour emergency service/repair information:
   1) Name, address, and telephone number of servicing agency.
   2) Names of personnel to be contacted for service arrangements.

6. Third Section:
   a. Description of systems.
   b. Manufacturer's literature describing each piece of equipment, including the following:
      1) Operating and maintenance instructions.
      2) Lubrication instructions.
      3) Start-up and shutdown procedures.
      4) Routine and emergency servicing instructions.
   c. Valve charts.
   d. Special wrenches, keys, etc.
   e. Temperature control diagrams.
   f. List of belt sizes, types, and lengths.
   g. List of filter sizes and types.
   h. Copies of all testing and balancing reports.
   i. Prints of all system wiring and control diagrams.
   j. All certifications and related information.
   k. Copies of all written warranties.
   l. The Owner's receipt of spare parts. Refer to Section 23 05 60.
   m. Copy of the signed and dated letter from the Owner, stating satisfactory completion of instruction, listing names of personnel instructed, and listing names of persons giving the instruction.

B. Refer to Section 01 77 00 and Section 01 78 39 for additional requirements.

## PART 3 EXECUTION

### 3.01 CONTROL DIAGRAM

A. Mount approved copy in a neat frame with backing under glass, or within a plastic jacket, in the Mechanical Room or other area designated by the Architect or Construction Manager.

END OF SECTION 23 05 07

# SECTION 23 05 15

# HVAC SLEEVES

## PART 1 GENERAL

### 1.01 RELATED DOCUMENTS

A. Section 01 73 29, “Cutting and Patching.”

B. Section 07 92 00, “Joint Sealants.”

C. Section 23 05 00, “Common Work Results for HVAC.”

D. Section 23 07 00, “HVAC Insulation.”

### 1.02 DESCRIPTION

A. Sleeve where piping or ductwork pass exposed through walls, and where any piping or ductwork passes through smoke-rated or fire-rated separations, equipment room walls, or above-grade floors.

B. Indicated sizes and locations are based on early Project information and should be verified by the Contractor.

C. Chases and constructed openings that are not indicated on the Drawings shall be provided at the expense of the Contractor requiring the chase or constructed opening.

D. If it becomes necessary to cut into the work because of the failure of the Contractor to notify the General Trades Contractor, then the General Trades Contractor shall do any cutting and patching required later, at the Contractor’s expense.

E. Provide dimensions and locations of openings required in walls for sleeves, piping, ductwork, louvers, grilles, and similar items, and deliver sleeves, to the General Trades Contractor, so as not to delay construction.

F. **BEFORE CONSTRUCTION OF MASONRY OR CONCRETE WALLS IS STARTED**, give the General Trades Contractor locations and sizes of all openings required for the installation of equipment or sleeves.

G. If sleeves are not installed due to the fault of the Contractor, holes through masonry or concrete construction shall be core drilled by the General Trades Contractor, at the expense of the Contractor.

H. In Drywall, Masonry, or Concrete Wall Construction:
   1. Furnish sleeves for piping, refrigerant piping, and ductwork to the General Trades Contractor. General Trades Contractor shall install sleeves where directed by the Contractor.
   2. Option for above ceiling only: General Trades Contractor shall omit block(s) where required for penetrations, and shall provide square-

finished opening. Do not omit blocks in sound barrier walls, under bearing points, or in fire-rated or smoke-rated walls.

3. Coordinate with the Architect, Structural Engineer, and General Trades Contractor.

I. In precast concrete work, in lieu of sleeves, cut holes after erection of concrete.

J. Verify which walls, ceilings, or floors are fire-rated, if any, and provide approved fire-blocking or fire-protective devices as required.

K. Carefully coordinate and check locations of sleeves immediately before and after each concrete pour and masonry installation.

L. Sleeves are not required in floor slabs on grade or in core-drilled openings not requiring water-proofing or firestopping. **Exception:** Sleeves are required at core drilling through hollow core pre-cast slabs and through concrete block walls, to facilitate containment of required firestopping material.

M. Furnish all piping and sheet metal ductwork sleeves and caulking for openings in walls and turn them over to the General Trades Contractor for installation and caulking.

N. General Trades Contractor shall install all sleeves.

O. Unless noted otherwise, the General Trades Contractor shall provide wall openings with lintels for grilles and ductwork in new walls.

## 1.03 QUALITY ASSURANCE

A. Standards:
1. Factory Mutual Global (FMG).
2. Underwriters Laboratories, Inc. (UL).

# PART 2 PRODUCTS

## 2.01 STANDARD SLEEVES

A. Piping Sleeve Material:
1. Up to 8 in. diameter: Machine-cut Schedule 40 black steel pipe.
2. Bare copper piping: Copper sleeves.
3. **(Option)** In non-fire-rated walls: Schedule 40 plastic pipe may be used for piping sleeves, where adjacent ceiling space is not used for return air plenum. Refer to Drawings.

B. Ductwork Sleeve Material: 14 ga. steel.

C. Sizing: Sleeves shall be large enough for insulation to be continuous, or for watertight or fire-rated sleeve seals to be installed. Size to allow 1/2 in. minimum clearance all around piping or piping insulation, and ductwork or ductwork insulation.

## 2.02 FIRE-RATED SLEEVE SEALS

A. ASTM E119 and E814 Silicone RTV foam, UL-approved.

B. Acceptable Manufacturers: Dow Corning 3-6548, Chase Foam, 3M Fire Barrier caulking or putty, IPC Flamesafe, Carborundum Fibersil, Nelson Fire Stop, BP Fyre Putty, Johns-Manville Cerafiber, KBS Mortar Seal, Hilti Fire Stop, International Protective Coatings Corporation "Flame-Safe," or CSD Sealing Systems "FSP."

# PART 3 EXECUTION

## 3.01 COORDINATION

A. Coordinate location of sleeves, core drilled holes, and other holes required with the General Trades Contractor, equipment, and other Trades.

## 3.02 CUTTING

A. Cut off sleeves through walls flush with each surface.

B. Cut off sleeves 1/8 in. above finished floors and 3 in. above floors in equipment rooms and shafts. Bottom of sleeve shall be cut off flush with surface.

C. Refer to Section 01 73 29 for specific requirements regarding approved cutting methods.

## 3.03 INSTALLATION

A. Piping and ductwork shall not bear on sleeves. Sleeves shall be installed plumb and true to line, grade, and position.

B. All piping sleeves and escutcheons shall have ample clearance for pipe and covering, and shall have chrome-plated wall and floor escutcheons over the pipe in finished areas. Provide chrome-plated or prime-coated escutcheons in other rooms.

C. Use sleeves where round duct openings are required through exposed walls, fire partitions, or equipment room walls. Close off all spaces around rectangular ducts through these walls.

D. Close off all spaces around fans, dampers, or grilles that require rectangular openings.

E. Install sheet metal escutcheons around ducts passing through walls exposed.

F. Fire Blocking of Penetrations of Fire-Rated Construction:
   1. Use approved, UL-listed, fire-retardant sealants, backing, and packing as required to maintain fire rating of the structure penetrated.
   2. Spray UL-listed foam sealant around exposed piping and ductwork entering and leaving fire-rated wall or floor structures.
   3. To ensure fire blocking, close space around piping and ductwork passing through walls and floors. Seal space up to a 1/2 in. gap with

sealant or caulking. Close off space greater than a 1/2 in. gap with sheet metal and seal airtight.

4. Pack all fire-rated or sound-rated separation sleeves with glass fiber, high-temperature mineral wool, aluminum-silica fiber, fire-retardant rope, calcium silicate, or other noncombustible material to maintain fire rating of structure, and finish with fire-rated sleeve seals.
5. Fill space around all sleeves extending into exposed areas with material compatible with adjacent construction and finish.
6. All openings shall have been UL-tested utilizing the proper rated penetrations to be equal to, or greater than, the barrier assembly in which the penetration occurs.
7. Install all penetrations and openings in accordance with the Manufacturers' instructions.
8. The fire-blocking assembly shall maintain the required fire-resistance rating of the wall or floor in which it is placed, and a further sealant shall be applied, if necessary, to attain a smoke-tight condition. Openings without sleeves shall be closed in the same manner.
9. Refer to Section 07 92 00 for additional requirements.

G. Seal between ductwork insulation and sleeve.

H. Unused sleeves shall be plugged, fire-packed, and finished to match adjacent surface.

END OF SECTION 23 05 15

# SECTION 23 05 16

# EXPANSION FITTINGS AND LOOPS FOR HVAC PIPING

## PART 1 GENERAL

### 1.01 RELATED DOCUMENTS

A. Section 23 05 48, "Vibration and Seismic Controls for HVAC Piping and Equipment."

### 1.02 DESCRIPTION

A. Provide thermal expansion control for all piping.

B. Isolate all piping for both noise and vibration transmission.

C. To prevent damage to building, equipment, joists, hangers, and piping, provide expansion loops, guides, anchors, and offsets in piping systems as necessary to accurately control pipe movement due to equipment operation or thermal gradients.

D. Anchor points are not indicated on Drawings. Install anchor points as needed to properly control piping movement. Typically piping shall be anchored at tees, elbows, and bends. Piping shall also be anchored in each direction.

### 1.03 QUALITY ASSURANCE

A. Standard: American Society of Heating, Refrigerating, and Air-Conditioning Engineers, Inc. (ASHRAE).

## PART 2 PRODUCTS

### 2.01 FLEXIBLE CONNECTORS, PIPING

A. Metraflex ML/SL. 200 deg. F., 200 PSIG, Type 321 stainless steel corrugated inner tubing and outer wire braid shield, threaded or flanged ends.

B. Metraflex. Flexible rubber connector, 180 deg. F., 150 PSIG, 150 lb. ASA flanges, steel retaining ring.

C. Other Acceptable Manufacturers: Approved equal by Hyspan Precision Products, Inc., Flexicraft, Flexonics Products, Minnesota Flexible Corp., Uniroyal General Rubber, or Twin City Hose, Inc.

### 2.02 PIPE ALIGNMENT GUIDES

A. Painted steel cylinder guide assembly with welded mounting brackets, 2-piece pipe clamp "Spider" assembly.

## PART 3 EXECUTION

### 3.01 INSTALLATION

A. Line Expansion, U-Bends: In all piping subject to expansion and contraction, install U-bends or loops in piping, in accordance with the 2008 ASHRAE Handbook — HVAC Systems and Equipment, Chapter 41. **Option:** Provide Metraflex Metraloop, sized per Manufacturer's recommendations.

B. Branch Connections: Branch connections to mains shall be made with a minimum of (2) 90 deg. elbows, and shall incorporate at least (1) change of direction in the horizontal plane and (1) change of direction in the vertical plane, before connecting to equipment or fixtures or before dropping in or rising in a wall. **Exception:** All refrigerant piping shall be installed per ASHRAE Standards and Manufacturer's recommendations.

C. Bullhead connections in any piping service are expressly prohibited.

D. Guides: All loops and expansion joints shall be supplemented with adequate guides as close to loops and joints as possible, and at recommended intervals from joints, to preserve alignment and pitch. Guides shall be rigidly secured to the structure and shall permit axial movement only. Follow Manufacturer's instructions where applicable.

E. Anchors: Pipe anchors shall be installed where required to secure the pipe and totally eliminate movement. They shall be attached securely to the structure.

END OF SECTION 23 05 16

# SECTION 23 05 23

# GENERAL-DUTY VALVES FOR HVAC PIPING

## PART 1 GENERAL

### 1.01 RELATED DOCUMENTS

A. Section 23 05 53, “Identification for HVAC Piping and Equipment.”

B. Section 23 21 00, “Hydronic Piping and Pumps.”

### 1.02 DESCRIPTION

A. Provide valves and accessories for the heating water system:
   1. In locations accessible to qualified personnel for operation, removal, maintenance, or servicing.
   2. As indicated on the Drawings and as discussed in other Sections of these Specifications.
   3. As required to facilitate the maintenance, operation, and servicing of all HVAC piping systems.

B. Coordinate with structure, and mechanical and electrical equipment.

C. All valves of the same type used on the Project shall be by the same Manufacturer.

### 1.03 QUALITY ASSURANCE

A. Standards:
   1. American National Standards Institute (ANSI).
   2. American Society for Testing and Materials (ASTM).
   3. American Society of Mechanical Engineers (ASME).
   4. Manufacturer’s Standardization Society of the Valve and Fittings Industry (MSS).

## PART 2 PRODUCTS

### 2.01 BALL VALVES (PERMITTED ONLY FOR 3 IN. AND SMALLER)

A. 150 lb. SWP, bronze body, TFE seat and seals, stainless steel ball, blowout-proof stem, 2-1/4 in. extended stem for insulation, lever handle.

B. **ONLY** Acceptable Manufacturers and Model Numbers: Milwaukee Model BA-100 or BA-150 or approved equal by Watts No. B-6000 or B-6001, Apollo 70-100 or 70-200, Hammond 8501 or 8511, Nibco 580-70 or 585-70, Kitz 68 or 69, or Red-White 5044F or 5049F.

## 2.02 COMBINATION BALANCING AND SHUT-OFF VALVES

A. 2 in. and Smaller: 175 lb. WOG, semi-steel body, threaded ends, full round ports, double O ring seal, epoxy-coated seating surface and ethylene-propylene-terpolymer plug, wrench handle.
   1. Acceptable Manufacturers: Homestead Fig. 1512, DeZurik 118S, or Tour Andersson Style 786 or 787.

B. **Option:** 175 lb. WOG ball-centric plug valve, including upstream and downstream taps, and integral check valve and caps for connection to portable flow meter.
   1. Acceptable Manufacturers: Homestead Fig. 1512-PD or Fig. 1522-PD or Fig. 1532-PD, or Bell & Gossett Circuit Setter or approved equal by DeZurik, HCI, Taco, Armstrong, Autoflow, Flow Design, Griswold, or Nexus.

## 2.03 DRAIN VALVES

A. 3/4 in. bronze hose-end ball valve, with cap and chain (where concealed).

B. Acceptable Manufacturers: Milwaukee BA-100H or approved equal by HCI, Walworth, or Nibco.

C. Provide 3/4 in. garden hose thread adapter on outlet of drain valve, with cap.

# PART 3 EXECUTION

## 3.01 INSTALLATION

A. Install valves with handwheel at or above centerline of pipe.

B. Install valves at service connections to equipment, or branch lines at mains, at low points for draining and at high points for venting.

C. **DO NOT INSTALL** any valves where the fluid operating pressure exceeds 80% of the valve's pressure rating.

D. Open up valves fully before soldering to piping.

E. During soldering or brazing, remove valve internals and protect the remaining element of sweat end valves against heat damage.

F. **DO NOT INSTALL** solder joint valves on systems where the fluid temperature may soften the solder.

G. **DO NOT USE** iron fittings on soldered copper connections.

H. Tag all valves as required in Section 23 05 53.

I. Coordinate all access panel locations, if required, with the General Trades Contractor.

## 3.02 TESTS

A. Test all valves for tightness.

B. Test-operate all valves at least once from closed-to-open-to-closed positions while valve is under pressure.

END OF SECTION 23 05 23

# SECTION 23 05 29

# HANGERS AND SUPPORTS FOR HVAC PIPING AND EQUIPMENT

## PART 1 GENERAL

### 1.01 RELATED DOCUMENTS

A. Section 23 05 16, "Expansion Fittings and Loops for HVAC Piping."

B. Section 23 05 48, "Vibration and Seismic Controls for HVAC Piping and Equipment."

C. Section 23 31 00, "HVAC Ducts and Casings (Hangers and Supports)."

### 1.02 DESCRIPTION

A. Provide all structural supports between building structural framing members to support major HVAC equipment, including DOAS units, heat pumps, roof openings, roof curbs, etc.

B. Provide support steel, attached to building structure, as necessary, to support piping and smaller HVAC equipment items. Provide supports between structural members, such as steel angles, channels, unistrut, etc., as required, except where specifically called out to be provided by the General Trades Contractor. Obtain prior written approval of the Architect.

C. Refer to Structural and Architectural Drawings to determine what supports are provided by the General Trades Contractor.

D. For any variation in supports needed for equipment actually purchased, Contractor shall bear all costs of modifications, including redesign costs.

E. Provide angles, clips, mechanical fasteners, reinforcement steel, drilling of structure, welding to structure, etc. as needed. Means of attachment shall be approved by the Architect and shall not degrade the structure.

F. Provide hangers and supports required for piping and equipment installed under the HVAC Contract.

G. Provide all necessary inserts, expansion shields, beam clamps, pipe floor supports, and auxiliary steel.

H. Provide pipe supports for piping installed on the roof under HVAC Contract.

I. Furnish roof curbs. Refer to Section 23 05 48 for rooftop unit isolation rails.

J. Inserts in Masonry Construction with Voids: Install appropriately sized all-thread rods within a 2-component polyester resin adhesive used in conjunction with a galvanized metal screen. Install rods in holes drilled with carbide-tipped drill bits.

K. Inserts in Masonry and Concrete:
   1. Provide the correct size and type of concrete inserts, along with information on their correct location, to the General Trades Contractor, so as not to delay construction.
   2. New Concrete Installations: Before pouring, the Contractor shall furnish concrete inserts (when used or required) for its Work to the General Trades Contractor, who shall install where directed by the Contractor.
   3. Precast Flexicore Concrete: Provide concrete inserts, toggle bolts, etc., as required for HVAC Work.

## 1.03 QUALITY ASSURANCE

A. Standards:
   1. American Concrete Institute (ACI).
   2. American National Standards Institute (ANSI), including ANSI B31.1, “Code for Power Piping.”
   3. American Society for Testing and Materials (ASTM).
   4. American Society of Mechanical Engineers (ASME), including ASME B31.9, “Building Services Piping.”
   5. Factory Mutual Global (FMG).
   6. Manufacturers Standardization Society of the Valve and Fittings Industry (MSS).
   7. National Fire Protection Association (NFPA).
   8. Underwriters Laboratories, Inc. (UL).

B. All piping supports, parts, and installation shall conform to the latest requirements of ANSI B31.1 and MSS Standard Practice SP-58, SP-69, and SP-89, and not exceed the maximum pipe deflections allowed by ASME B31.9, except as supplemented or modified by the requirements of this Specification.

C. Components shall be selected and matched to the load imposed on them.

# PART 2 PRODUCTS

## 2.01 DUCTWORK HANGERS AND SUPPORTS

A. Refer to Section 23 31 00.

## 2.02 PIPING HANGERS

A. Uninsulated Piping:
   1. Steel, 1/2 in. to 8 in.: Anvil Fig. 69. Galvanized carbon steel, adjustable swivel ring.
   2. Copper, 1/2 in. to 4 in.: Anvil Fig. CT-99. Copper-plated hangers, adjustable tubing ring, carbon steel ring, and malleable iron adjusting nut.

B. Insulated Piping:
   1. Steel or copper, all sizes: Anvil Fig. 260. Adjustable clevis, carbon steel yoke, U-strap, rod, and hex nuts.
   2. Thermal protector:
      a. 2 in. and smaller: 12 in. long segment of rigid pipe insulation supported by Anvil Fig. 167, 18 ga. galvanized steel protection shield.
      b. 2-1/2 in. and larger: Pipe Shield, Inc., Model CS or CS-CW, waterproof hydrous calcium silicate, or ASTM C552, Type I cellular glass, encased in 360 deg. galvanized steel shield, same thickness as adjoining insulation, or equal by Insul-Shield.
   3. Hanger size shall be sufficient to accommodate pipe and insulation without compressing the insulation.
   4. For insulated refrigerant piping, use insulated couplings by Klo-Shure.

C. Vertical Piping: Anvil Fig. 261. Friction riser clamp with 2-point bearing. Use Anvil Fig. CT-121 copper-plated riser clamp for copper pipe. Shorten legs as required to conceal riser clamp within pipe chase and still provide adequate support.

D. For Piping Indicated to be Installed “Tight to Ceiling or Wall”:
   1. Uninsulated, 1/2 in. to 4 in.: Anvil Fig. 262. Carbon steel. **Option:** Power-Strut channels with Model PS 3126 hold-down clamp, use with rubber cushion for copper pipe.
   2. Insulated, 3/4 in. to 8 in.: Anvil Fig. 103. Carbon steel, offset pipe clamp.

E. Acceptable Manufacturers: Anvil International, Inc., B-Line Systems, Inc., Carpenter & Patterson, Inc., Globe Pipe Hanger Products, Inc., Erico/Michigan Hanger Co., Inc., National Pipe Hanger Corp., PHD Manufacturing, Inc., or Klo-Shure.

## 2.03 TRAPEZE HANGERS

A. Unistrut P1000 or Superstrut A1200. Angle iron, or channel of sufficient length to support pipes and insulation on individual hangers, roller supports or saddles with insulation protectors, support capacity, support spacing, trapeze hanger rod diameter, and quantity as required to support total piping load.

B. Design support system and obtain approval of a Structural Engineer licensed in Ohio. Submit details to the Architect for approval.

C. Acceptable Manufacturers: B-Line Systems, Inc., GS Metals Corp., Erico/Michigan Hanger Co., Inc., National Pipe Hanger Corp., Unistrut Corp., Wesanco, Inc., or Powerstrut.

## 2.04 PIPE HANGER RODS, CLAMPS, AND BRACKETS

A. Pipe hanger rods shall be solid steel, threaded ends or all-thread rods of diameter listed below, with double nut attachment to the hanger and at the hanger attachment. Sizes are as follows:

| PIPE SIZES | ROD DIAMETER |
|---|---|
| Up to 2 in. | 3/8 in. |
| 2-1/2 in. and 3 in. | 1/2 in. |

B. Beam Clamps (up to 8 in. diameter pipe):
   1. Anvil Fig. 227. Top beam clamp, steel jaw, hook rod with nut, and spring washer steel eye-bolt, with Anvil Fig. 157 for appropriate rod diameter.
   2. **Option:** Anvil Fig. 86. Malleable iron clamp, hardened steel cup point set screw with Fig. 89 steel retaining clip. **C-CLAMPS WITHOUT RETAINING CLIPS ARE EXPRESSLY PROHIBITED.**

C. Wall Brackets: Carbon steel, back plates, and bolts.
   1. Anvil Fig. 194. Lightweight 750 lb. load.
   2. Anvil Fig. 195. Medium-weight 1,500 lb. load.
   3. **Option:** Unistrut Superstrut A1200.

D. Pipe Supports on Roof, 3 in. and smaller diameter pipe: Miro Model 3-R. Polycarbonate roof deck base, adjustable roller housing, and polycarbonate resin/glass-filled nylon rod.

E. Acceptable Manufacturers: Anvil International, Inc., B-Line Systems, Inc., Carpenter & Patterson, Inc., Globe Pipe Hanger Products, Inc., Erico/Michigan Hanger Co., Inc., National Pipe Hanger Corp., PHD Manufacturing, Inc., or Klo-Shure.

## 2.05 PREFABRICATED ROOF CURBS

A. Roof Curbs: 18 ga. galvanized steel, welded seams, mitered corners. 2 in. thick rigid fiberglass insulation, treated wood nailer strip, damper flanges, 12 in. minimum height, integral raised cant.
   1. Acceptable Manufacturers: Pate Co. or approved equal by ThyCurb Vent Products Co., Inc. or MicroMetl.

B. Equipment Rails (for heat pumps): 18 ga. galvanized steel, integral base plate, continuous welded corner seams, wood nailer, counterflashing with lag screws, internal reinforcing as required to support equipment load, 13 in. minimum height, raised cant.
   1. Acceptable Manufacturers: Pate Co. or approved equal by ThyCurb Vent Products Co., Inc. or MicroMetl.

C. Furnish integral raised cant strips on all curbs to be installed on bitumastic or built-up roofs.

## 2.06 STRUCTURAL STEEL

A. Provide ASTM A36 / ASTM A36M, black and galvanized, steel plates, shapes, and bars, steel beams, unistrut, standard-weight black steel pipe, or steel angle of adequate size and strength to safely carry the weight of equipment item.

## 2.07 FINISH

A. Unless otherwise noted, all steel hangers and supports shall be standard black. **Exception:** Hangers and supports for exposed exterior applications shall be galvanized.

## 2.08 CONCRETE INSERTS

A. In Poured Concrete: Anvil Fig. 282. Malleable iron, universal mounting, lateral adjusting.

B. In Precast Concrete: Anvil Fig. 117, Hilti, or Philips. Malleable iron, expansion case, interior standard pipe threads, external helical wedge.

C. Acceptable Manufacturers: Anvil International, Inc., B-Line Systems, Inc., Carpenter & Patterson, Inc., Globe Pipe Hanger Products, Inc., Erico/Michigan Hanger Co., Inc., National Pipe Hanger Corp., PHD Manufacturing, Inc., or Klo-Shure.

D. Refer to Manufacturer's recommendations for correct selection as to pipe size and loading. Confirm with the General Trades Contractor that the concrete used is of a sufficient strength to hold the insert. Use inserts.

# PART 3 EXECUTION

## 3.01 INSTALLATION

A. Attach all items of equipment securely to structure, floor, or concrete pad.

## 3.02 INSTALLATION — PIPING HANGERS AND SUPPORTS

A. Install all necessary pipe hangers, supports, clamps, wall brackets, and attachments as required:
   1. To properly support piping from building structure.
   2. To allow controlled thermal movement of piping systems.
   3. To facilitate action of expansion joints, loops, and bends, where used.
   4. To provide slope where indicated.

B. Provide pipe guides and anchors as required to properly control pipe movement. Method shall suit job conditions. Refer to Section 23 05 16.

C. Install hangers and supports with all necessary inserts, bolts, rods, nuts, washers, and other accessories, according to Manufacturer's recommendations. Hangers shall be double-nutted.

D. **DO NOT USE POWDER-ACTUATED ANCHORS OR FASTENERS.**

E. **DO NOT USE C-CLAMPS WITHOUT RETAINING CLIPS.**

F. Use a separate hanger for each pipe. Do not hang one pipe from another.

G. Provide additional supports as necessary to maintain piping alignment.

H. Maximum spacing of piping supports shall be as follows:

| PIPE SIZE | STEEL PIPE | COPPER PIPE |
|---|---|---|
| 3/4 in. or smaller | 6 ft. | 5 ft. |
| 1 in. | 6 ft. | 6 ft. |
| 1-1/4 in. | 6 ft. | 6 ft. |
| 1-1/2 in. | 6 ft. | 8 ft. |

I. Support piping at pumps and equipment from floor, structure, or walls, so that piping weight is not supported by pumps or by equipment.

J. Support piping near elbows, such that the total cantilevered length for both sides of the elbow does not exceed 3 ft.

K. Provide proper angles or channels between structural members for hanger supports where necessary. Weld to steel structural members. Consult with the Architect regarding this procedure.

L. Trapeze Hangers:
   1. At the Contractor's option, trapeze hangers may be used where parallel runs of pipe occur.
   2. All rods on trapeze hangers shall be 1/2 in. minimum.
   3. Clamp each pipe individually.
   4. Provide individual U-bolt clamps for insulated pipes.
   5. Clamp size shall accommodate insulation and shield.
   6. Provide individual piping attachment to each Unistrut hanger, angle, or channel.

M. Support vertical risers at the floor with friction riser pipe clamps.

N. Do not support hangers from roof deck or floor above. Span from structural members with supplementary steel where direct attachment to structural members is not practical.

O. Ceilings:
   1. Do not support heating lines, or any other utility lines, from ceiling and ceiling grid systems.
   2. Piping, and each ceiling and ceiling grid system, shall be a separate installation. Independently support each from the building structure.
   3. Where interferences occur, in order to support piping, install trapeze-type hangers or supports. Locate them where they do not interfere with access to fire dampers, valves, and other HVAC equipment items.
   4. Install additional ceiling hangers where the ceiling supports grilles, registers, or diffusers, as required to prevent the ceiling from sagging.

P. Use top flange beam clamps to avoid burning metal deck.

Q. Piping Insulation:
   1. Adjust pipe hangers to proper elevation and install all hanger rods in a plumb position before pipe insulation is installed.
   2. Whenever insulated pipe is supported by hangers, size hangers for outer diameter of insulation so that hangers pass freely around the insulation.
   3. Protect the insulation where hangers contact pipe with saddles or protection shields.

R. Painting:
   1. Touch-up:
      a. Clean field welds, bolted connections, and abraded areas of all shop paint.
      b. Paint exposed areas immediately after erecting hangers and supports.
      c. Use same paint materials as used for shop painting.
      d. Apply paint by brush or spray to provide a minimum dry film thickness of 2.0 mils.
   2. Galvanized surfaces: Clean and apply galvanizing repair paint to comply with ASTM A780.

## 3.03 INSTALLATION — ROOF CURBS

A. Verify roof slope and type before ordering curbs.

B. Provide all necessary dimensions of HVAC equipment unit to the General Trades Contractor.

C. Furnish curbs and deliver on roof.

D. General Trades Contractor shall cut and frame openings, provide reinforcing of structure as needed to support loads, provide flashing, and “roof in” as required.

E. Provide blocking under curbs, set roof curbs in place, shim to level, and secure to roof deck.

F. Provide weathertight curb caps, if units cannot be set in place immediately.

G. General Trades Contractor shall counterflash roof curbs as required to make absolutely watertight.

## 3.04 INSTALLATION — CONCRETE

A. Avoid cutting concrete or masonry by using inserts.

END OF SECTION 23 05 29

# SECTION 23 05 48

# VIBRATION AND SEISMIC CONTROLS FOR HVAC PIPING AND EQUIPMENT

## PART 1 GENERAL

### 1.01 RELATED DOCUMENTS

A. Section 23 05 16, “Expansion Fittings and Loops for HVAC Piping.”

B. Section 23 05 29, “Hangers and Supports for HVAC Piping and Equipment.”

C. Section 23 31 00, “HVAC Ducts and Casings (Hangers and Supports).”

D. Section 23 81 43, “Air-Source Unitary Heat Pumps.”

### 1.02 DESCRIPTION

A. Provide a complete vibration isolation system to isolate motorized equipment, piping, ductwork, and appurtenances from the building structure and ceiling construction.

B. Manufacturer and Model Number listed under Part 2 shall be considered to be the Design Base Manufacturer and Model Number. Other Acceptable Manufacturers will be permitted, unless specifically excluded.

C. Vibration isolation devices, including auxiliary steel bases and pouring forms, shall be designed and furnished by a single Manufacturer or Supplier.

### 1.03 QUALITY ASSURANCE

A. Noise levels in various parts of the building shall not exceed the noise criteria recommendations as set forth in the 2013 American Society of Heating, Refrigerating, and Air Conditioning Engineers (ASHRAE) Handbook — Fundamentals, Chapter 8. The midpoint of the range of noise criteria curves shall apply to, and become part of, these Specifications.

### 1.04 SUBMITTALS

A. The Isolator Manufacturer’s submittal shall include drawings showing the complete design for the supplementary bases and a tabulation of the design data on the isolators, including the following:
   1. Outside diameter of the springs.
   2. Free, operating, and solid heights of the springs.
   3. Free and operating heights of the neoprene or fiberglass isolators.
   4. Isolation efficiency based on the lowest operating speed of the equipment supported.

## PART 2 PRODUCTS

### 2.01 VIBRATION ISOLATORS

A. Pad "F" Mounts: Kinetics Noise Control Model KIP. Pre-compressed molded fiberglass isolation pads, neoprene-jacketed and stabilized during manufacture. Pads shall be sized for loading from 40 PSI to 60 PSI.

B. Hanger "H" Mounts: Kinetics Noise Control Model SFH or Model SH. Combination spring and fiberglass isolation hangers incorporating 2 in. thick neoprene-jacketed fiberglass inserts in series with spring, all encased in welded steel brackets. The spring shall have a minimum additional travel of 50% between the design height and the solid height.

C. Roof Curbs for Rooftop Units: Refer to Section 23 31 00.

D. Other Acceptable Manufacturers: Approved equal by Vibration Mountings and Controls, Inc., or Mason Industries, Inc.

### 2.02 ISOLATOR SCHEDULE

A. Furnish isolator types as follows:

| EQUIPMENT ITEM | KINETICS ISOLATOR |
|---|---|
| VRF fan coil units | KIP |
| Pumps, inline suspended | SFH |
| Rooftop heat pumps | Refer to Section 23 81 43 |
| Rooftop HVAC units | Refer to Section 23 31 00 |

## PART 3 EXECUTION

### 3.01 PREPARATION

A. Steel components shall be phosphatized and painted. All nuts, bolts, and washers shall be zinc-electroplated.

B. Structural steel bases shall be thoroughly cleaned of welding slag and primed with zinc-chromate or metal etching primer.

C. All isolators exposed to the weather shall have steel parts PVC-coated or hot-dip-galvanized.

D. Aluminum components shall be etched and painted.

### 3.02 INSTALLATION

A. Equipment: All motorized refrigeration and heating and air conditioning equipment, including pumps, fans, and other equipment, shall be either mounted on, or suspended with, vibration isolators.

B. Coordinate installation with the General Trades Contractor.

END OF SECTION 23 05 48

# SECTION 23 05 53

# IDENTIFICATION FOR HVAC PIPING AND EQUIPMENT

## PART 1 GENERAL

### 1.01 DESCRIPTION

A. Identify by labels and tags the following items:
   1. Equipment: Install nameplates for equipment such as air handlers, pumps, boilers, heat pumps, fans, control cabinets, and similar items.
   2. Piping exposed in equipment rooms, accessible service areas, or accessible chases; piping running above accessible ceiling construction.
      a. Install stencils and color banding for piping, flow arrows, and contents identification.
      b. Install piping identification at **MAXIMUM 25 FT.** intervals.
      c. For piping systems not listed, verify with the Construction Manager.
   3. All HVAC valves, including control valves.
      a. Provide valve tags. Tags shall be stamped with service designation and numbered consecutively for each system. Attach to valves or as directed by the Architect.
      b. Prepare valve tag directory with charts showing locations, designations, and sizes of valves. Laminate under plastic and mount as directed by the Architect. Include additional copies of valve charts in the Operating and Maintenance Manuals.
   4. Exposed ductwork, and ductwork in equipment rooms, in accessible shafts, and running above accessible ceiling construction.
      a. Install stencils and color banding for ductwork, flow arrows, and contents identification.
      b. Install ductwork identification at **MAXIMUM 25 FT.** intervals.
      c. For ductwork systems not listed, verify with the Construction Manager.

## PART 2 PRODUCTS

### 2.01 EQUIPMENT IDENTIFICATION

A. Engraved laminated plastic nameplates, sized for 3/4 in. high letters or numbers, Gothic style.

B. Acceptable Manufacturers: Seton “Setmark” or approved equal by Brady, MSI, Calpico, or Sun-Line.

## 2.02 PIPING IDENTIFICATION

A. 2 in. wide, painted gloss enamel or vinyl tape color band. Where required, second color band shall be 1 in. wide and centered over first color band. Stencils or adhesive-backed plastic markers, same color as 2 in. band.

B. Letter size shall be as follows:

| Overall Pipe/Insulation Size | Minimum Letter Height |
|---|---|
| Up to 1-1/4 in. diameter | 1/2 in. high |
| 1-1/2 in. to 2 in. diameter | 3/4 in. high |
| 2-1/2 in. to 6 in. diameter | 1-1/4 in. high |

C. Acceptable Manufacturers: Seton “Setmark” or approved equal by Brady, MSI, Calpico, or Sun-Line.

## 2.03 PIPING IDENTIFICATION SCHEDULE

A. Identify HVAC piping as follows:

| Type of Service | 2 in. Band Color | 1 in. Band Color | Designation |
|---|---|---|---|
| Heating Water Supply | Aluminum | — | HS |
| Heating Water Return | Aluminum | Brown | HR |
| Refrigerant Hot Gas | Light Blue | Purple | HG |
| Refrigerant Liquid | Light Blue | Brown | L |
| Refrigerant Suction | Light Blue | Black | S |
| Air Conditioner Condensate | Brown | Green | COND |

## 2.04 VALVE IDENTIFICATION

A. 2 in. diameter, 19 ga., brass tag with brass jack chain. 1/4 in. high stamped letters over 1/2 in. high stamped numbers, both black-filled.

B. Acceptable Manufacturers: Seton, Brady, MSI, Calpico, or Sun-Line.

## 2.05 VALVE IDENTIFICATION SCHEDULE

A. Identify HVAC valves as follows:

| Type of Service | Valve Tag Designation |
|---|---|
| Heating Water Supply | HS |
| Heating Water Return | HR |
| Refrigerant Hot Gas | HG |
| Refrigerant Liquid | L |
| Refrigerant Suction | S |

## 2.06 DUCTWORK IDENTIFICATION

A. Labels: Laminated multi-color rigid plastic, with holes for attachment to duct.

B. Size: As required for text, minimum 2-1/2 in. wide by 3/4 in. high.

C. Text Characters: Engraved, sized for normal viewing distance, minimum 1/4 in. high, maximum 3/4 in. high. Indicate system designation (e.g., AHU-1, EF-1, etc.) and duct service (e.g., SA, RA, etc.). Include flow direction arrow.

D. Fasteners: Stainless steel rivets or self-tapping screws.

## 2.07 DUCTWORK IDENTIFICATION SCHEDULE

A. Identify ductwork as follows:

| **Type of Service** | **Designation** |
|---|---|
| Low Pressure Supply Air | SUPPLY |
| Low Pressure Return Air | RETURN |

# PART 3 EXECUTION

## 3.01 COORDINATION

A. Coordinate to ensure that the identification used by all Trades is uniform in type, style, and appearance.

B. Coordinate the exact nomenclature to be used on equipment nameplates with the Construction Manager and Architect.

C. Coordinate with the Construction Manager to match existing piping and ductwork identification, and valve numbering system. Where existing piping or ductwork is not identified by name or banding, or if valve-tagging system does not exist, refer to Identification Schedule.

## 3.02 INSTALLATION

A. Equipment: Attach nameplates with stainless steel screws. **Exception:** Use compatible adhesive where screws might damage equipment.

B. Piping:
   1. Apply piping identification only after any finish painting is completed.
   2. Provide service designation, flow arrows, and color banding at **MAXIMUM 25 FT.** intervals.
   3. Also identify piping at connections to equipment, at valves, at branches from main, and at each riser.
   4. Where a pipe passes through a wall, apply a service label on the pipe where it enters and exits the wall.
   5. Apply stencil over background, in colors as indicated above, and varnish over when dry. Stencils shall be readable from a standing position.

C. Valves: Attach tags to valves in such a manner that valve shall be operable without removing or damaging tag. Tags shall be readable from a standing position when valve is in normal position. Add valve tag numbers to Record drawings.

D. Ductwork:
   1. In mechanical spaces, label ductwork with service and flow arrows at **MAXIMUM 25 FT.** intervals.
   2. Where a duct passes through a wall, apply a service label on the duct where it enters and exits the wall.

END OF SECTION 23 05 53

# SECTION 23 05 60

# REQUIREMENTS FOR COMPLETION OF HVAC WORK

## PART 1 GENERAL

### 1.01 RELATED DOCUMENTS

A. Division 01, "General Requirements."

B. Section 23 05 00, "Common Work Results for HVAC."

C. Section 23 05 06, "HVAC Submittals."

D. Section 23 05 07, "HVAC Operating and Maintenance Manuals."

E. Section 23 05 53, "Identification for HVAC Piping and Equipment."

F. Section 23 05 93, "Testing, Adjusting, and Balancing for HVAC."

### 1.02 DESCRIPTION

A. Complete and submit the following list, which is a partial list of the items required prior to Contract Completion:
   1. Submittals. Refer to Section 23 05 06.
   2. Operational tests, adjustments, and inspections of all equipment and systems, and report of final test of all special systems, as required in this, as well as other, Sections. Refer to Section 23 05 00 and Section 23 05 93.
   3. HVAC systems testing, adjustments, and balancing. Refer to Section 23 05 93.
   4. Protection and cleaning. Refer to Section 23 05 00.
   5. Operating and Maintenance Manuals. Refer to Section 23 05 07.
   6. Record Drawings. Refer to Section 23 05 00.
   7. Painting. Refer to Section 23 05 00.
   8. Equipment warranties.
   9. Guarantee. Refer to Section 23 05 00.
   10. Equipment, piping, and ductwork identification; valve tagging. Refer to Section 23 05 53.
   11. Instruction of the Owner's personnel as required in this, as well as other, Sections.
   12. Spare parts as required in this, as well as other, Sections.

B. Provide or perform all of the above items before Contract Completion.

## PART 2 PRODUCTS

### 2.01 SPARE PARTS

A. Provide a receipt, signed by the Owner, for all spare parts and insert it in the Operating and Maintenance Manuals.

B. Furnish (1) complete set of the following spare parts for the Owner's use after the guarantee period expires:
   1. Gaskets for each piece of equipment that requires gaskets.
   2. Set of gaskets for each pump.
   3. Set of spare pump seals for each pump.
   4. Special keys, wrenches, and similar items required, or special tools.
   5. Special pressure and temperature gauges.
   6. Spare set of belts for each fan.
   7. Install a set of filters in each unit for use during construction. Install a new set of filters in each unit at Contract Completion. Furnish a third set of filters for each unit to the Construction Manager at Contract Completion.
   8. Any other parts mentioned elsewhere.

## PART 3 EXECUTION

### 3.01 FINAL OPERATING TESTS AND PROCEDURES

A. Prior to Contract completion, conduct system operational tests for a period of at least (5) days, not necessarily consecutive, as scheduled by the Construction Manager, to demonstrate fulfillment of the requirements of the Contract. During this time, adjust equipment so that it will perform as the Manufacturer intended, and so that systems will function as designed.

B. Operate each system in every mode of operation, and check the position of valves, dampers, switches, and other devices for proper closure, operation, and switching.

C. Refer to Section 23 05 93 for additional information.

### 3.02 INSTRUCTION OF OWNER'S PERSONNEL

A. Provide in-service training for the system's operators, including the following:
   1. Dedicated outdoor air system (DOAS) units: Minimum of (2) hours training.
   2. Heat pumps: Minimum of (2) hours training.
   3. Fan coil units: Minimum of (2) hours training.
   4. In-line pumps: Minimum of (1) hour training.
   5. Variable air volume terminal boxes: Minimum of (2) hours training.
   6. Building automation system: Minimum of (2) hours training.

B. Provide all applicable user manuals and related training documentation.

C. Provide training schedule and training outline for approval (45) days prior to Contract Completion.

D. After all system operational tests have been completed, schedule an instruction period with the Construction Manager. Schedule well in advance, so that all of the Owner's personnel may attend if they desire.

Coordinate with the Construction Manager and Architect for date and time of training sessions.

E. Participate in training sessions. Instruct the Owner's personnel in the operation and maintenance of all systems and equipment. Use Operating and Maintenance Manuals to familiarize the Owner's personnel with equipment and procedures. Allow time as necessary for this instruction.

F. Record a video of all Owner training, instructions, and equipment start-up demonstrations on a digital video disc (DVD). Turn over a copy of the DVD to the Construction Manager.

G. Instruction shall include the following:
   1. Location of equipment and explanation of what it does (function).
   2. Reference to operating instruction manuals for record and clarity.
   3. Coordination of written and verbal instructions, so that the operation of each system is fully understood by operating personnel.
   4. Complete review of items contained in Operating and Maintenance Manuals.
   5. Discussion of maintenance procedures that must be followed by the Owner.
   6. Complete demonstration and explanation of each System.
   7. Performance of specific and random flow tests by the Air Balance Subcontractor. Refer to Section 23 05 93.

H. Provide a copy of OFCC Form No. F390-03, "Certification of Equipment Demonstration," signed by the Construction Manager, to the Architect. Insert copies in each Operating and Maintenance Manual.

## 3.03 FOLLOW-UP INSPECTIONS

A. Make an inspection within (90) days after occupancy of the building to make minor adjustments as needed to ensure that all equipment is operating properly and that satisfactory conditions are being maintained throughout, and to satisfy any unusual conditions. Schedule with the Architect. Consult with the Construction Manager.

B. A minimum of (1) month before the end of the guarantee period, contact the Owner and Architect to discuss system operation, and to plan for the future care and maintenance of the system.

C. (1) month before the end of the guarantee period, contact the Owner and perform an inspection to review any items needing correction.

D. Refer to Section 23 05 93 for additional information.

## 3.04 PUNCH LIST PROCEDURE

A. Refer to Division 01.

END OF SECTION 23 05 60

# SECTION 23 05 93

# TESTING, ADJUSTING, AND BALANCING FOR HVAC

## PART 1 GENERAL

### 1.01 RELATED DOCUMENTS

A. Section 23 05 60, “Requirements for Completion of HVAC Work.”

### 1.02 DESCRIPTION

A. Provide all labor, materials, and tools for completely testing, balancing, and adjusting the following systems:
   1. Air flows.
   2. Air temperature difference across all coils and heat exchangers.
   3. Outside air dampers.
   4. Water flows.

B. Balance all items.

C. Make an inspection of the HVAC system during the opposite season from that in which the initial adjustments were made, and make any modifications to the initial adjustments of equipment as required to produce the proper operation and conditions in each conditioned space.

### 1.03 QUALITY ASSURANCE

A. Standards:
   1. Associated Air Balance Council (AABC) National Standards for Field Measurement and Instrumentation.
   2. National Environmental Balancing Bureau (NEBB).
   3. American Society of Heating, Refrigerating, and Air Conditioning Engineers (ASHRAE):
      a. ASHRAE 111.
      b. Applicable requirements in ASHRAE/IESNA 62.1-2007, including Section 7.2.2, “Air Balancing.”
      c. Applicable requirements in ASHRAE/IESNA 90.1-2007, including Section 6.7.2.3, “System Balancing.”
   4. Illuminating Engineering Society of North America (IESNA).
   5. Sheet Metal and Air Conditioning Contractors National Association (SMACNA) Testing, Adjusting, and Balancing Bureau (TABB).

B. Instruments used for testing and balancing of air and hydronic systems must have been calibrated within a period of (6) months and checked for accuracy prior to start of work on this Project.

### 1.04 TEST AND BALANCE SUBCONTRACTOR QUALIFICATIONS

A. Retain the services of an Independent Test and Balance Agency that specializes in, and whose business is limited to, the testing and balancing of

HVAC systems. The Agency selected shall be fully certified by AABC, and shall have at least (1) member certified by the National Examining Boards of the United States and Canada. Certification by NEBB will also be acceptable.

## PART 2 PRODUCTS (NOT APPLICABLE)

## PART 3 EXECUTION

### 3.01 GENERAL PROCEDURES FOR TESTING AND BALANCING

A. Perform testing and balancing procedures on each system according to the procedures contained in AABC's "National Standards for Testing and Balancing Heating, Ventilating, and Air Conditioning Systems," or NEBB's "Procedural Standards for Testing, Adjusting, and Balancing of Environmental Systems," and this Section.

B. Comply with requirements in ASHRAE 62.1-2007, Section 7.2.2.

### 3.02 DUCT CLEANING

A. Clean new duct system(s) before testing, adjusting, and balancing.

### 3.03 BALANCING REPORT

A. Submit a completed balancing report indicating the performance of fans, pumps, motors, air distribution devices, and flows through coils, pumps, and piping.

B. The report shall be presented on standard AABC forms, or equivalent.

C. The final report shall be stamped and signed by a Certified Test and Balance Engineer.

### 3.04 ONGOING INSPECTIONS

A. Inspect the installation of all HVAC systems, including equipment, sheet metal work, temperature controls, and other components. This inspection work shall be performed periodically as the HVAC work progresses.

B. The various water circulating systems shall be filled, purged of air, and put into operation before hydronic balancing.

C. The various air systems shall be in operation with all accessories, filters, and diffusers in place.

D. Inspect air leakage in ducts, and report any excessive leakage to the Architect.

E. Inspect system and determine if there are any adverse air flows or pressures (positive or negative) in the building. Report to the Architect.

F. Balance the air system to the quantities specified, mark the dial positions, and then increase the percentage of outside air for initial occupancy in order to remove noxious gasses emitted by new furniture, carpet, etc. Discuss

procedure and percentage of outside air with the Architect. After (6) months, readjust the outside air to the originally specified amounts.

## 3.05 WATER SYSTEMS

A. After all equipment and piping have been installed, hydronic systems shall be balanced for proper distribution and uniform temperature drop.

B. The flow of water shall be adjusted, using flow meters and system-balancing valves.

C. Water balance report shall include the following information and data for hot water heating system.
   1. Final readings of temperatures of all supply and return mains and branches.
   2. Final readings of temperatures at inlet and outlet of all radiation units and coils.
   3. Final readings of pressure drop across all coils.
   4. Final reading of actual pump head and pump motor amperage and voltage.
   5. Pump curve with impeller size and balance point plotted.
   6. Motor horsepower and nameplate amperage for each motor.
   7. Starter element sizes and amperage ratings for each motor. If starter elements amperage rating is more than 10% greater than motor nameplate amperage, provide proper size elements.
   8. Final setting on pump balancing valves.

## 3.06 AIR SYSTEMS

A. Air velocities shall be measured with an anemometer, a velometer, or a pitot tube and manometer. Static pressures and total pressures shall be measured with a velometer, or a pitot tube and manometer. Fan RPM shall be measured with a tachometer or a revolution counter. Motor amperage shall be measured with an “Amprobe” or similar device. Voltages shall be measured with a voltmeter.

B. In measuring velocities in ducts or at outlets, traverse the duct or outlet so that (1) reading is taken for each 80 sq. in. maximum of flow area. A minimum of (6) readings shall be taken for each duct or outlet regardless of size.

C. Adjust supply air systems as follows:
   1. Adjust all fans to deliver the design air quantities at system design static pressure.
   2. Adjust all duct-balancing dampers and extractors for initial balance.
   3. Adjust dampers at individual diffusers and registers for the design air quantities.
   4. Adjust dampers and register or grille bars to provide uniform draftless air distribution in all areas of rooms.
   5. Readjust duct-balancing dampers if diffuser dampers are noisy.

6. Any or all of the above procedures shall be repeated as required until air quantities at individual registers or diffusers are within 5% of quantities shown on the Drawings and total air quantity handled by each system is within 5% of the quantity shown or specified.
7. All readings should be taken with all doors closed and all equipment operating in occupied mode.

D. Air balance report shall include the following data and information:
1. Average of final velocity readings taken at each individual supply air outlet or exhaust register, size of outlet, free area of outlet, and air quantity delivered or exhausted.
2. Average of final velocity readings taken at each fan or air handling unit, size of the duct or plenum, and total air quantity delivered or exhausted by the fan or unit.
3. Final static pressure at each fan outlet and at each fan inlet. Review Manufacturer's literature and unit schedule to determine whether to measure static pressure across the fan only, or across the entire unit.
4. Measure static pressure across each coil, filter, heat recovery ventilator, and fan for each air handling unit.
5. Final fan speed for each fan.
6. Manufacturer's fan curve for each fan or air handling unit, with balance position plotted.
7. For each motor: Final running amperage, actual voltage, motor horsepower and nameplate amperage, and starter element sizes and amperage ratings. If starter elements amperage rating is more than 10% greater than motor nameplate amperage, provide proper size elements.
8. Air temperature rise or drop across all heat exchangers and coils (entering dry bulb, entering wet bulb, leaving dry bulb, leaving wet bulb), including all cooling coils. Check readings after compressors have run sufficiently to obtain full capacity.

## 3.07 FAN SHEAVES

A. Where necessary, or when directed by the Architect, provide larger or smaller fan pulleys at no additional cost to the Owner, sized to drive the fans at the speeds necessary to give the indicated air flow.

## 3.08 QUALITY CONTROL

A. Testing and balancing shall be performed in complete accordance with AABC National Standards for Field Measurement and Instrumentation, Form #81266, Volume 1, sections as applicable.

B. At time of final inspection, the Test and Balance Agency shall recheck, in the presence of the Construction Manager, specific and random selections of data recorded in the Certified Report. If random tests indicate a measured flow deviation 5% greater than that recorded in the Certified Report, the report shall be automatically rejected. In the event the report is

rejected, the Test and Balance Subcontractor shall readjust and test the system, submit new reports, and reinspect at no cost to the Owner.

C. Following acceptance of Certified Report by the Construction Manager, the settings of all valves, splitters, dampers, and other adjustment devices shall be permanently marked by the Test and Balance Subcontractor, so that adjustment can be reestablished if disturbed. Devices shall not be marked until after final acceptance.

END OF SECTION 23 05 93

# SECTION 23 07 00

# HVAC INSULATION

## PART 1 GENERAL

### 1.01 RELATED DOCUMENTS

A. Section 23 31 13, “Metal Ducts (Low-Velocity).”

### 1.02 DESCRIPTION

A. Provide insulation for new work, including the following items:
   1. Piping:
      a. Heating water.
      b. Indoor air conditioning condensation drain.
      c. Refrigerant suction.
      d. Refrigerant hot gas.
      e. Refrigerant liquid.
      f. All exterior piping.
   2. Equipment:
      a. Exposed coil ends and return bends.
      b. Cold surfaces subject to sweating inside packaged equipment.
   3. Round ductwork:
      a. Above-ceiling supply.
      b. Exposed supply.
   4. Rectangular ductwork:
      a. Above-ceiling supply.
      b. Exposed supply.

B. Dedicated outdoor air system (DOAS) units shall be factory-insulated to comply with the State Energy Code.

C. Insulation is not required on return air ducts, unless noted otherwise on the Drawings.

D. All exposed insulated piping and fittings, from floor up to 7 ft.-6 in. above floor, except in Mechanical Rooms, shall have a polyvinyl chloride (PVC) cover applied over pipe insulation and solvent welded together. Material shall be same as PVC fitting covers.

E. All piping insulation shall have labels attached every 50 ft. stating “NON-ASBESTOS CONTAINING.”

F. Manufacturer and Model Number listed under Part 2 shall be considered to be the Design Base Manufacturer and Model Number. Other Acceptable Manufacturers will be permitted, unless specifically excluded.

## 1.03 DEFINITIONS

A. "Concealed" insulation: Routed through chases, soffits, or other construction, or installed above ceilings, below floor, in trenches or tunnels, or within walls, double partitions, or crawl spaces.

B. "Exposed" insulation: In full or partial view; not "Concealed" as defined above (i.e., insulation in mechanical rooms, etc.).

## 1.04 QUALITY ASSURANCE

A. Standards:
   1. Sheet Metal and Air Conditioning Contractors National Association (SMACNA).
   2. Underwriters Laboratories, Inc. (UL).
   3. International Code Council (ICC) 2006 International Energy Conservation Code (IECC).
   4. American Society for Testing and Materials (ASTM) E-84, C 534, C 916, and C 1071.
   5. National Fire Protection Association (NFPA):
      a. 2006 NFPA 255, "Standard Method of Test of Surface Burning Characteristics of Building Materials."
      b. 2009 NFPA 90A, "Standard for the Installation of Air-Conditioning and Ventilating Systems."
      c. 2009 NFPA 90B, "Standard for the Installation of Warm Air Heating and Air-Conditioning Systems."
   6. American Society of Heating, Refrigerating, and Air Conditioning Engineers (ASHRAE):
      a. Applicable requirements in ASHRAE 62.1-2007.
      b. Applicable requirements in ASHRAE/IESNA 90.1-2007:
         1) Section 6.4.4, "HVAC System Construction and Insulation."
         2) Table "Minimum Duct Insulation R-Value, Cooling and Heating Only Supply Ducts and Return Ducts."
         3) Table "Minimum Duct Insulation R-Values, Combined Heating and Cooling Supply Ducts and Return Ducts."
   7. Illuminating Engineering Society of North America (IESNA).
   8. North American Insulation Manufacturers Association (NAIMA) AH124, "Fibrous Glass Duct Liner Standard."
   9. State of Ohio: Ohio Administrative Code (OAC) 4101:2: 2011 Ohio Mechanical Code.

B. Piping insulation shall provide a maximum allowable heat loss of 25 BTUH per sq. ft. of pipe surface area.

C. Fire and Smoke Hazard Ratings: Insulation and related components, such as coverings, coatings, tapes, and cloths, shall not exceed 25 Flame Spread, 50 Smoke Developed, and 50 Fuel Contributed on above ground insulation, according to ASTM E-84 test and NFPA 255.

D. Installation shall be done by Tradesmen specializing in insulation work in strict accordance with Manufacturer's recommendations.

## 1.05 PERFORMANCE REQUIREMENTS

A. Airstream Surfaces: Surfaces in contact with the airstream shall comply with requirements in ASHRAE 62.1-2007.

# PART 2 PRODUCTS

## 2.01 PIPING INSULATION

A. Fiberglass, Exterior and Interior: Owens Corning Fiberglas 25 ASJ/SSL/II. 1-piece, heavy-duty, fiberglass insulation with all-purpose vapor barrier jacket of white kraft bonded to aluminum foil and reinforced with fiberglass yarn, longitudinal pressure-sensitive tape for sealing of lap joint, 0 deg. F. to 800 deg. F. temperature rating.
   1. Other Acceptable Manufacturers: Approved equal by Schuller, Certainteed, Armstrong, Rubatex, Imcoa, Manson, or Knauf.

B. Foam:
   1. Shall only be used for air conditioning condensation drain piping and refrigerant piping. Obtain approval from the Code Authority having Jurisdiction for use of this insulation type. If not approved, use fiberglass insulation as specified in Paragraph A above.
   2. Closed cell, foamed plastic, tubular, 1/2 in. minimum wall thickness, fire-rated, 220 deg. F. temperature rating. Pipe and joints shall be sealed with Manufacturer's approved adhesive.
   3. Acceptable Manufacturers: Armstrong fire-rated "Armaflex," Rubatex, or Imcoa.

C. Pipe Fittings:
   1. Insulation: Owens Corning TIW-1. Wrapped 1 lb. density fiberglass blanket with reinforced foil and kraft vapor barrier facing or molded fiberglass segments with pre-molded, 1-piece PVC plastic covers. Wrapped fiberglass blanket shall be installed to same thickness as pipe insulation.
      a. Other Acceptable Manufacturers: Approved equal by Schuller, Certainteed, Armstrong, Rubatex, Imcoa, Manson, or Knauf.
   2. Fitting insulation covers: Pre-molded, 1-piece PVC plastic covers, with maximum 25 Flame Spread and 50 Smoke Developed ratings. Shall be listed and certified for installation in ceiling air plenum spaces.
      a. Acceptable Manufacturers: Ceelco, Zeston, Johns Manville, Knauf, Speedline, or Proco.

## 2.02 PVC JACKET OVER PIPING INSULATION

A. Ceelco 25/50. UL-approved PVC molded plastic 1-piece covers.

B. Other Acceptable Manufacturers: Zeston, Johns Manville, Knauf, Speedline, or Proco.

## 2.03 DUCTWORK INSULATION

A. HVAC Ductwork:
   1. Concealed rectangular and round ducts: Owens Corning All Service Wrap. 2 in. thick, 1 lb. density flexible fiberglass blanket, with reinforced foil and kraft vapor barrier facing, 250 deg. F. temperature rating.
   2. Exposed round ducts: Owens Corning Fiberglas. Flexible, 1 in. thick, 6 lb. density, fiberglass board with “AP” vapor barrier facing, 250 deg. F. temperature rating.
   3. Exposed rectangular ducts: Owens Corning 703 ASJ. Semi-rigid, 1-1/2 in. thick, 3 lb. density, fiberglass board with all-service jacket (ASJ) vapor barrier facing, 250 deg. F. temperature rating.

B. Other Acceptable Manufacturers: Approved equal by Schuller, Certainteed, Armstrong, Rubatex, Imcoa, Manson, or Knauf.

## 2.04 MASTICS, ADHESIVES, SEALANTS, AND FINISHES

A. Mastics, adhesives, and finishes shall be approved for their intended use by the Insulation Manufacturers.

B. Vegetable or wheat paste is prohibited.

C. Acceptable Manufacturers: Benjamin-Foster, Vimasco, ICC, or Aerobol.

# PART 3 EXECUTION

## 3.01 DELIVERY, STORAGE, AND HANDLING

A. Protection: Leave insulation boxed and stored until time for use. Elevate and cover material to avoid moisture condensation and physical abuse.

## 3.02 INSTALLATION — PIPING INSULATION

A. Coordinate installation with pressure testing of piping.

B. Do not use damaged or water-soaked insulation.

C. Insulate piping where concealed in walls or chases.

D. Insulate piping located in walls with 1/2 in. thick fire-rated foam insulation, or indoor pipe insulation, as specified above.

E. Insulate any pipe hanger or pipe support that has direct contact with any hot or cold piping, or any item that is subject to sweating.

F. Do not install foam insulation in air handling plenum spaces.

G. Insulation shall be continuous through sleeves and hangers and through walls where no sleeves are required.

H. Leave no “raw” ends on insulation. Bevel insulation terminations, seal with insulating cement or mastic, and cover ends same as pipe insulation covering. PVC caps over straight-cut ends that have been vapor-sealed may be used in lieu of beveling.

I. Exposed insulation shall be finished smooth, sized if required, and left ready for painting.

J. Piping shall be pressure-tested and accepted before piping insulation is installed.

K. Install plenum-rated PVC plastic fitting covers in all air handling ceiling plenum spaces, and on all piping fittings.

L. Insulate any exposed coil return bend piping. Verify type of insulation to be used.

M. Install insulation shields at the time insulation is hung, to avoid insulation damage.

N. Set all hangers perpendicular before any insulation is applied.

O. Make application on clean, dry pipes, with all joints butted firmly together.

P. Complete installation of insulation and sealing shall be in strict accordance with the Manufacturer's recommendations.

Q. Contractor shall replace all damaged insulation at its own expense.

R. Maintain continuity of all insulation. No voids in insulation or vapor barriers shall be permitted.

## 3.03 INSTALLATION — PIPE FITTINGS INSULATION

A. Unless otherwise noted, insulate valves and flanges for all services. Insulate all couplings. Insulator shall verify during bidding the extent of these connections and prepare its bid accordingly.

B. Fittings shall be insulated with factory-formed mitered sections of pipe insulation or 1 lb. density fiberglass blanket insulation wrapped under compression to full thickness of the pipe insulation. Mitered sections and blanket insulation shall be secured with double wrapping of tape over the entire fitting. Vapor barrier mastic shall be applied on concealed fittings to maintain vapor barrier. Cover with molded PVC plastic cover.

C. Do not cover unions and flanges initially. Bevel insulation and apply cement to ends. Then add insulation over these items, so that it can be removed without disturbing adjacent pipe insulation. Cover with molded PVC plastic cover.

D. Unions, flanges, valve bonnets, and fittings shall be wrapped with oversized pipe insulation to provide the same insulation thickness as pipe insulation. Oversized insulation sections shall be used to form a collar between the (2) insulation sections with blanket insulation used to fill the gaps. Cover with PVC jacket.

E. Where insulation terminates, insulation shall be tapered down to the pipe surface complete with jacket.

## 3.04 INSTALLATION — PIPE JACKET COVERS

A. In addition to insulation jacketing and fitting covers specified above, install PVC jacket over all exposed insulation below 7 ft.-6 in. above floor. Jacket shall have overlapping joints and shall be sealed with suitable adhesive. Butt joints shall be sealed with matching 3 in. wide all-service jacket (ASJ) pressure-sensitive tape.

## 3.05 PIPING AND EQUIPMENT INSULATION THICKNESSES

A. Heating Water Piping:
   1. Fluid temperature less than 250 deg. F., piping 1-1/2 in. and smaller: 1 in. thick, minimum.
   2. Cover all heating water piping and valves.

B. Condensation Drain Piping:
   1. Piping:
      a. 1 in. and smaller: 1/2 in. thick, minimum.
      b. 1-1/4 in. and larger: 3/4 in. thick, minimum.
   2. Fittings and valves shall be wrapped with blanket insulation to the same thickness as adjacent pipe insulation and covered with Ceelco 25/50 PVC fitting cover.
   3. Cover all piping and valves. Do not cover unions initially. Bevel insulation and apply cement. Then add insulation over these items, such that it can be removed without disturbing adjacent piping insulation.

C. Refrigerant Suction Line: 3/4 in. minimum.

D. Refrigerant Hot Gas Line: 3/4 in. minimum.

E. Refrigerant Liquid Line: 3/4 in. minimum.

## 3.06 WEATHERPROOFING OF EXTERIOR (ABOVE GRADE) PIPING INSULATION

A. In addition to the requirements of Paragraph 3.05, “Piping and Equipment Insulation Thicknesses,” install Childers metal-jacketed fiberglass insulation segments with 2 in. wide sealing snap straps.

## 3.07 INSTALLATION — DUCTWORK INSULATION

A. Leave no “raw” ends on any insulation. Seal joints with 2 in. wide application of adhesive.

B. Use adhesive and welded pins with washers for attaching liner and rigid board insulation to ductwork. Seal joints with a 2 in. wide application of adhesive.

C. Provide sheet metal nosings on leading and trailing edges at liner transitions.

D. All duct sizes shown are **INSIDE CLEAR DIMENSIONS**.

E. Tape and seal all exterior joints.

F. Install insulation so as not to interfere with the operation of sprinklers.

G. Concealed Ductwork Insulation: Duct wrap installation. Use 3 in. wide pressure-sensitive tape on all joints, screws, exposed pins, terminations, and breaks.

H. Exposed Ductwork Insulation:
   1. Install insulation on the outside on stick clips, or welded pins. This is in addition to the duct liner.
   2. Duct wrap installation: Install 3 in. wide pressure-sensitive tape on all joints, screws, exposed pins, terminations, and breaks.

END OF SECTION 23 07 00

# SECTION 23 08 00

# COMMISSIONING OF HVAC

## PART 1 GENERAL

### 1.01 RELATED DOCUMENTS

A. Section 01 91 00, “Commissioning.”

B. Section 01 91 51, “Mechanical/Electrical Systems Manual.”

### 1.02 DESCRIPTION

A. This section describes the process for commissioning of the various building systems and outlines the duties of parties involved.

B. The commissioning process may be applied to all equipment, components, and systems to be commissioned as listed in Part 3 of this Section, including specified interfaces to and from equipment and systems provided under the other Divisions of this Specification.

### 1.03 CONTRACTORS

A. The appropriate Contractors shall cooperate and coordinate their work during the commissioning process. They shall perform all work required for the installation of the components and systems, and for operation during the commissioning process. They shall furnish all necessary resources to accomplish the installation and the commissioning.

### 1.04 COMMISSIONING AGENT

A. The Commissioning Authority (CxA) is independently retained by the Owner, and shall have the authority to grant final acceptance of each system commissioned.

### 1.05 COMMISSIONING DOCUMENTATION

A. Commissioning Plan: CxA shall create a plan during the design phase of the project to identify scope of commissioning for the project and a preliminary schedule of activities for use during the project by members of the Commissioning Team.

B. Meeting Minutes: CxA shall generate and issue to members of the Commissioning Team after each commissioning progress meeting.

C. Design Phase: CxA shall review HVAC drawings at Design Development and Construction Document Phases, shall recommend improvements to correct deficiencies in design, and shall specifically focus on HVAC controls.

D. Construction Checklists: CxA shall provide a list of items to inspect for each piece of equipment that is to be commissioned. Contractor shall complete checklist prior to equipment start-up and functional testing.

E. Start-up Plan: Contractor shall submit to identify methods to be used for equipment pre-checks, start-up procedures, start-up schedule, and sample reports to document completion. Contractor shall document all equipment deficiencies and corrections made in the field as part of start-up report.

F. Test Reports: Contractor shall generate reports to document system/equipment testing included in the Contract that is not dictated by the CxA (i.e., air balance report, etc.). Review As-Built Drawings.

G. Commissioning Issues Log: CxA shall update and issue log to identify system deficiencies found through the commissioning process.

H. Functional Tests: CxA shall create, and the Contractors shall review, for use during functional testing of each system.

I. Training Plan: Contractor shall submit plan identifying personnel providing training and their qualifications, training supplemental materials, and training session agendas, for review by the CxA.

J. Final Commissioning Report: CxA shall provide report summarizing results, status of remaining operating deficiencies, and future actions and nonactions.

K. Commissioning Complete: Formal Commissioning Project Complete document with signoff to add finality to project.

## PART 2 PRODUCTS

### 2.01 TESTING EQUIPMENT AND INSTRUMENTATION

A. Contractor shall provide all industry standard test equipment required for performing the specified tests. Any proprietary vendor-specific test equipment shall be provided by that Vendor or Manufacturer.

B. Contractor's instrumentation shall be of sufficient quality and accuracy to test and measure system performance within the tolerances required. Instrumentation shall be calibrated at the Manufacturer's recommendation intervals with calibration tags permanently affixed to the instrument. Instrumentation shall be maintained in good repair and operating condition throughout the duration of use on this project and shall be immediately re-calibrated or repaired if dropped or damaged in any way during use on the project.

## PART 3 EXECUTION

### 3.01 THE COMMISSIONING TEAM

A. In addition to the CxA, the Commissioning Team shall consist of:
   1. Owner.
   2. HVAC Contractor.
   3. Electrical Contractor.
   4. Test and Balance Subcontractor.

5. Temperature Controls Subcontractor.
6. Mechanical Design Engineer.

## 3.02 COMMISSIONING RESPONSIBILITIES

A. Within (30) days of the award of Contract, the Contractor shall submit the names of all the Trades people who will be part of the commissioning process. Contractor, and all its Sub-Trades and Suppliers, shall cooperate with the CxA in the commissioning process. Contractor's responsibilities shall include:
   1. Review the project schedule and identify the milestone commissioning activities at the initial commissioning scope meeting, to be held within (90) days of contract award. Milestone commissioning activities shall include, but are not limited to:
      a. Equipment start-ups.
      b. System start-ups.
      c. Testing activities performed by the Contractor.
      d. Readiness of each major system.
      e. System functional testing as part of the commissioning process.
   2. Attend commissioning meetings, and complete action items arising from them, as required to allow the commissioning process to proceed on schedule.
   3. Complete and provide all system readiness documentation required by the commissioning process.
   4. Provide a start-up plan for each piece of equipment and system that is identified to be commissioned. Notify the CxA a minimum of (7) calendar days before start-up of major equipment and systems.
   5. Provide personnel and testing instrumentation required to operate and test equipment and systems as part of functional performance testing. Testing may include calibration verification of system devices. Testing shall take place under the direct supervision of the CxA. Contractor shall reimburse the Owner and CxA for costs associated with retesting of systems that fail initial testing.
   6. Contractor shall respond in writing to the CxA and Owner at least as often as commissioning meetings are being scheduled concerning the status of each apparent outstanding discrepancy identified during commissioning. Discussion shall cover explanations of any disagreements and proposals for their resolution. Contractor shall not consider any required re-testing a justified reason for a claim of delay or for a time extension.

## 3.03 COMMISSIONING PROCESS

A. The commissioning process depends upon proper coordination between all Commissioning Team members, strict adherence to schedule, and completion of all required documentation. Responsibilities of each team member are described in this and other sections of the contract.

B. Construction Phase:

1. Commissioning Meetings: An initial Commissioning Scope Review / kick-off meeting will be held with all members of the Commissioning Team at the beginning of the project (generally within (90) days of award of contract). CxA will schedule periodic Commissioning Team progress meetings to review progress of commissioning work and coordinate activities. (Commissioning progress meetings will be scheduled to coincide immediately before or after the regular weekly construction progress meeting.) Contractor shall anticipate at least (1) commissioning meeting for every month of the construction phase (additional meetings as required will not be considered additional work to this contract).
2. Commissioning Schedule: Contractor shall assist the CxA in the development of a written schedule that integrates the commissioning activities into the construction schedule specified in Division 01, "General Requirements." Update of the commissioning schedule to reflect changes in the work will be done as necessary. The commissioning schedule shall include at least the following dates:
   a. Submission of Operation and Maintenance information for systems to be commissioned.
   b. Schedule for systems, subsystems, and equipment start-up, including services of Manufacturers' authorized service representatives, and performance of pretest checks.
   c. Schedule for functional performance testing, including seasonal testing.
   d. Schedule for the Owner's operating personnel training.
3. Prerequisite to Start-Up: Test and Balance report must be signed off by the CxA prior to final commissioning of the respective systems. CxA will verify the Testing and Balancing work in progress as necessary and correct. It is expected that all relevant and known punch-list items are addressed prior to that agenda commissioning activity.
4. Equipment and System Start-Up: Before any equipment or system is started, the Start-up Plan, including all pre-start check documentation provided by the Equipment Manufacturer and construction checklists provided by the CxA, shall be submitted. Contractor shall notify the CxA of the scheduled start-up a minimum of (7) days prior to the start-up, and give the CxA the opportunity to witness part or all of the start-up work and conduct its own pre-check inspection. After startup is completed, the Contractor shall submit a completed start-up report for each piece of equipment.
5. Initial Operation: Once the Contractor completes the start-up, testing, balancing, and calibration of all components and systems, it shall operate all systems through the specified modes of operation, and test the system responses to specified abnormal or emergency conditions. Contractor shall complete the system and perform this functional and

performance pre-check before the Commissioning Team performs the functional acceptance testing.

a. Functional acceptance testing included in the commissioning process is verification that the Contractor has provided a complete and functioning system per the Contract requirements. It is not an opportunity for the Contractor to determine deficiencies and work remaining.
b. Contractor shall ensure that a qualified technician(s) is available and present during the agreed-upon schedules and of sufficient duration to complete the necessary tasks, tests, adjustments, and problem resolution.
c. Functional testing of the system shall be terminated and re-scheduled if it is deemed by the CxA that the system is not ready for functional testing and that the Contractor has not fully completed the required initial operation pre-check. Contractor shall reimburse the Owner, CxA, Construction Manager, and Architect for costs associated with the additional time and resources required to reschedule and repeat testing due to a lack of system readiness by the Contractor.

C. Acceptance Phase:
1. Functional Acceptance Testing: Systems identified for commissioning shall be operated through the entire specified sequence of operations, as directed by the CxA for verifying acceptable operation. Contractor shall provide all testing instrumentation required and operate the system during the tests, and by this, the Contractor shall ensure that the systems are not operated beyond their limits as installed.
2. System Deficiencies: All system operational deficiencies identified during the functional acceptance testing will be recorded by the CxA for correction by the Contractor. Work to correct the deficiencies will be under the direction of the Owner, the Owner's Representative, or the Construction Manager. Final acceptance of the system shall not be granted until all deficiencies identified are corrected.

## 3.04 SYSTEMS/EQUIPMENT TO BE COMMISSIONED

A. The following HVAC systems shall be commissioned:
1. Building automation system.
2. Air distribution systems (DOAS units, VRF fan coils, etc.).
3. Variable air volume terminal boxes.
4. Cabinet heaters.
5. VRF heat pump systems.
6. Heating system.
7. In-line pumps.

B. The equipment listed below shall be provided a formal start-up. (Refer to other Sections of the Project Specification for additional start-up requirements.)
1. VRF heat pumps.

2. DOAS units.
3. Heating water run-around pumps.

END OF SECTION 23 08 00

# SECTION 23 09 00

# INSTRUMENTATION AND CONTROL FOR HVAC

# (ELECTRICAL COORDINATION)

## PART 1 GENERAL

### 1.01 RELATED DOCUMENTS

A. Section 23 09 23, “Direct-Digital Control System for HVAC.”

B. Section 23 09 93, “Sequence of Operations for HVAC Controls.”

C. Section 26 05 11, “Equipment Hook-Up and Final Connection.”

D. Section 26 05 19, “Low-Voltage Electrical Power Conductors and Cables.”

E. Section 26 05 33, “Raceway and Boxes for Electrical Systems.”

F. Section 26 09 00, “Instrumentation and Control for Electrical Systems.”

### 1.02 DESCRIPTION

A. Coordinate installation of items requiring power or control wiring with the Electrical Contractor.

B. Equipment drawing 1,000 watts or more must have a power factor of 85% or greater at rated load conditions. Correct equipment with an operating power factor less than 85% to at least 90% under rated load operating conditions. Contractor furnishing the equipment shall be responsible for power factor correction devices.

C. Unless noted otherwise, the Electrical Contractor shall provide all power, control, and interlock wiring and conduit, relays, control power transformers, auxiliary contacts, and fuses as required for HVAC equipment, to provide complete and operating HVAC control systems, and to effect the proper sequence of operation of each HVAC equipment subsystem.

1. **Exception:** Temperature Controls Subcontractor shall provide direct digital control (DDC) wiring in conformance with Division 26 requirements.

D. HVAC Contractor shall supervise all final connections to HVAC equipment and devices.

E. HVAC Contractor shall coordinate its Work as follows:

1. **TEMPERATURE CONTROL ITEMS:**
   a. <u>Temperature Control Cabinet</u>:
      1) Electrical Contractor shall provide power for cabinet.
   b. <u>Thermostats</u>:
      1) Unless specified otherwise, the HVAC Contractor shall provide.
      2) Electrical Contractor shall provide wiring.

3) **Exception:** Temperature Controls Subcontractor shall provide DDC thermostat wiring.
4) **Exception:** Electrical Contractor shall install and wire line voltage thermostats for unit heaters, exhaust fans, etc.

c. Fan Speed Controllers:
1) HVAC Contractor shall furnish controllers.
2) Electrical Contractor shall install and wire.

d. Control Wiring:
1) Electrical Contractor shall provide wiring.
2) **Exception:** Temperature Controls Subcontractor shall provide DDC wiring in compliance with requirements of Division 26 Specification.

e. Power for VAV Terminals:
1) Electrical Contractor shall provide power wiring at above-ceiling locations noted on the Drawings for Temperature Controls Subcontractor use.

2. **ITEMS SPECIFIED IN DIVISION 23, "HVAC":**

a. Pumps and Similar Equipment:
1) Electrical Contractor shall provide starters with HAND/OFF/AUTO switches, disconnect switches, interlock wiring, and power wiring to each unit.
2) Electrical Contractor shall wire variable frequency drive furnished by the HVAC Contractor.

b. Dedicated Outdoor Air System (DOAS) Units:
1) Electrical Contractor shall provide (3) separate power feeds (supply air fan, exhaust air fan, and heat recovery wheel) to each unit, unless otherwise noted.
2) Temperature Controls Subcontractor shall provide all DDC wiring and freezestat wiring.
3) Electrical Contractor shall wire variable frequency drive furnished by the HVAC Contractor.

c. VRF Systems Heat Pumps, Branch Selector Boxes, and Fan Coils:
1) Electrical Contractor shall provide disconnect switches, interlock wiring, and power wiring to each component.
2) Temperature Controls Subcontractor shall provide all DDC wiring.

d. Cabinet Unit Heaters:
1) Electrical Contractor shall provide disconnect switches, and power and control wiring.
2) **Exception:** Temperature Controls Subcontractor shall provide all direct digital control wiring.

3. **ITEMS SPECIFIED IN DIVISION 26, "ELECTRICAL":**
   a. Smoke Detectors:
      1) Electrical Contractor shall provide duct, plenum, and ceiling smoke detectors, relays, and wiring to the fire alarm system to shut down air handling and supply air fans.

## 1.03 QUALITY ASSURANCE

A. Standards:
   1. All electrical equipment shall be listed by Underwriters Laboratories, Inc. (UL) and furnished in accordance with Specification requirements of Division 26, "Electrical."
   2. Installation shall comply with National Fire Protection Association (NFPA): 2011 NFPA 70, "National Electrical Code® (NEC)."
   3. National Electrical Manufacturers Association (NEMA).

## 1.04 ALTERNATIVE MANUFACTURER ELECTRICAL REQUIREMENTS

A. Contractor furnishing the equipment shall compensate the Electrical Contractor for the cost of any additional labor and materials required to wire and hook up equipment other than the Design Base Model and Manufacturer, including installation and wiring of any power factor correction devices furnished by the HVAC Contractor.

# PART 2 PRODUCTS

## 2.01 DISCONNECT SWITCHES

A. Factory-installed disconnect switches shall be NEMA Type 3R, heavy-duty, disconnect switch within the housing of the equipment, for exterior equipment such as roof exhaust fans, or other NEMA Type as required for wet and dusty environments.

B. Refer to Division 26 for acceptable Manufacturers.

## 2.02 MOTOR STARTERS

A. Factory-Installed Starters: NEMA Size 0 minimum, manual or magnetic as indicated, with selector switch or pushbutton as noted, pilot lights where noted, overloads, auxiliary contacts, fuses, and control power transformer, unless unit being controlled includes integral 24 volt control system.

B. HVAC Contractor shall provide factory-installed starters only where specifically listed in Division 23 Specification Sections. Electrical Contractor shall provide all other starters.

C. Refer to Division 26 for acceptable Manufacturers.

## 2.03 MOTOR STARTER HEATERS

A. Bi-metal, automatic reset.

B. Acceptable Manufacturers: Allen Bradley, Siemens, Square D, or General Electric.

## 2.04 POWER FACTOR CORRECTION DEVICES

A. Indoor dustproof, or outdoor rain-tight, compartment with capacitors and fuses.

B. Acceptable Manufacturers: Square D or approved equal by Cornell-Dublier, Siemens, GE, or Westinghouse.

# PART 3 EXECUTION

## 3.01 PREPARATION

A. Consult Drawings that may affect location of equipment, conduit, or wiring, and make minor adjustments in locations as necessary to secure coordination.

## 3.02 INSTALLATION

A. HVAC Contractor shall coordinate all wiring requirements with the Electrical Contractor.

B. HVAC Contractor shall provide the Electrical Contractor with all required wiring diagrams for equipment furnished under the HVAC Contract.

C. HVAC Contractor shall assist in check-out and start-up operations.

D. HVAC Contractor shall install all power factor correction devices required for HVAC equipment.

E. Variable Frequency Drives (VFDs):
   1. HVAC Contractor shall furnish VFDs with integral disconnect switches.
   2. Electrical Contractor shall install drives and provide power wiring to VFD and motor.
   3. Temperature Controls Subcontractor shall provide all DDC wiring, under separate contract.

F. On all starters provided by the HVAC Contractor, if motor starter element's designated amperage is more than 110% of the full load current after balancing, the HVAC Contractor shall provide new starter elements.

G. HVAC Contractor is responsible for the final operation of all equipment provided under its Work.

## 3.03 WIRING

A. Electrical Contractor shall provide all power, line voltage, and control wiring and conduit, regardless of voltage (except for DDC).

B. Temperature Control System:
   1. All electrical work performed in the installation of the temperature control system as described in this Specification is part of the Temperature Controls Work, and shall be in accordance with the 2011 NEC and applicable State Codes.
   2. Temperature Controls Subcontractor shall provide all DDC sensors, controls, and low voltage wiring to DDC sensors and controls.

3. Temperature Controls Subcontractor shall provide the temperature control cabinet with power terminal strips and all wiring inside the cabinet. Temperature Controls Subcontractor shall oversee all final control connections to all equipment and controls.
4. Temperature Controls Subcontractor shall coordinate all controls and wiring thereof, regardless of who furnishes the item. Temperature Controls Subcontractor shall provide all wiring diagrams and write all sequences of operations.

C. Refer also to Section 23 09 23, Section 23 09 93, Section 26 05 19, Section 26 05 33, and Section 26 09 00. These Sections may discuss additional control sequences of systems and other wiring requirements.

D. Wiring installation shall be acceptable to the Code Authority having Jurisdiction.

END OF SECTION 23 09 00

# SECTION 23 09 23

# DIRECT-DIGITAL CONTROL SYSTEM FOR HVAC

## PART 1 GENERAL

### 1.01 PREFACE

A. **Terminology:** Temperature Controls Subcontractor is responsible for the Work described in this Section. In this Section, the term "Subcontractor" shall mean the Temperature Controls Subcontractor performing Work on this Project, unless otherwise noted.

### 1.02 RELATED DOCUMENTS

A. Section 23 05 00, "Common Work Results for HVAC."

B. Section 23 05 06, "HVAC Submittals."

C. Section 23 05 93, "Testing, Adjusting, and Balancing for HVAC."

D. Section 23 09 93, "Sequence of Operations for HVAC Controls."

E. Section 23 33 13, "Dampers."

### 1.03 ABBREVIATIONS AND SYMBOLS

A. Refer to the list of abbreviations attached to this Section. Refer also to Section 23 05 00. All abbreviations may not necessarily apply to this Work.

### 1.04 SCOPE OF WORK

A. Provide an operating direct-digital control (DDC) system as an extension of the existing Honeywell DDC system to control and monitor operation of the new dedicated outdoor air system (DOAS) units, variable refrigerant flow (VRF) fan coils and heat pumps, heating water run-around pumps, and cabinet unit heaters.

B. Provide modifications to the hardware, software and programming, and network to result in a complete operating DDC system within each building. All end-use devices, controllers, programming, and graphics shall be commensurate to components within the existing Honeywell system.

C. Subcontractor shall have a local office within a 50-mile radius of the job site, staffed with factory-trained engineers fully capable of providing instruction, routine maintenance, and 24-hour emergency maintenance service on all system components. Subcontractor shall have a 3-year experience record in the design and installation of computerized buildings systems similar in scope and performance to that specified herein, and shall be prepared to provide evidence of this history, as a condition of acceptance and approval, prior to Bidding.

D. Provide TCS modifications as specified herein in their entirety. Provide the engineering, installation, calibration, software programming, and checkout necessary for a complete and fully operational TCS, as specified hereafter.

E. Subcontractor shall provide all necessary hardware, wiring, and computing equipment and software as defined in this Specification and as required to control new equipment and systems. Any variances from this Specification or related documentation shall be submitted in writing at the time of Bid.

F. Coordinate all controls and wiring, regardless of who furnishes the item.

G. Subcontractor is responsible for all wiring diagrams, and for writing the sequence of operations.

H. Provide modifications to the existing temperature control system to result in a complete and operating electronic control system for the new equipment and systems as hereinafter specified. The required integration shall include the compilation and display of all devices and objects on the existing Honeywell DDC system. In addition, the system shall perform the said integration through the use of BACnet/IP communications. All integration work shall be performed in cooperation with Honeywell or its local representative. Failure to mention any specific item or device does not relieve the Subcontractor of the responsibility for installing or integrating such device/peripheral in order to comply with the intent of the Drawings or this Specification.

I. In general, the new work shall be based on a completely electronic system, using DDC technology. Equipment and labor that are not specifically referred to herein or on the plans, but that are required for meeting the functional intent, shall be provided at no additional cost to the Owner.

J. Subcontractor shall base its Bid on the system sequences as specified in Section 23 09 93.

K. Mount control components.

L. Provide on-site training for the Owner's personnel.

## 1.05 DESCRIPTION

A. The BAS shall be an integrated, distributed processing network of stand-alone controllers that incorporate DDC technology.

B. System Architecture: The system architecture shall utilize native BACnet communication protocols between intelligent distributed control modules over Ethernet, ARCNET, or EIA-485 media. The system shall provide the DDC system, EMS, and BAS for the HVAC and other building sub-systems specified herein.

C. Each microprocessor-based digital controller must maintain its programmed memory in a non-volatile state; this non-volatile memory shall "keep" its programmed information without the use of a battery when power is unavailable.

D. The intent of this Specification is that all BAS components and related temperature control components, specified elsewhere, shall be provided by the same vendor. Related temperature components are items such as sensors, transducers, control valves, relays, panels, thermostats, actuators, etc.

E. BAS components and related temperature control components shall be manufactured and installed by either Honeywell or a factory-authorized representative. All programming shall be performed by either Honeywell or a factory-trained representative.

F. Provide all control and interlock wiring and conduit, relays, control power transformers, auxiliary contacts, and fuses as required to provide complete and operating control systems and effect the proper sequence of operation of each equipment subsystem.

G. Trained employees of the Subcontractor shall install and adjust all controls.

H. No revisions that change the described operation or end results will be permitted.

## 1.06 DOCUMENTATION

A. Provide proper and adequate documentation, including technical specification sheets, signed software license agreement, operator manuals, record drawings, and warranty statement.

B. Submittals: Submit shop drawings for approval showing the information listed below. Refer to Section 23 05 06.
   1. (9) copies of all data and control drawings.
   2. Complete written description of sequence of operations.
   3. Control system drawings, including all pertinent data to provide a functional operating system and a complete wiring diagram.
   4. Data sheets for all hardware and software control components.
   5. Description of the installation materials, including conduit, wire, etc.
   6. All control schemes.
   7. Terminal-to-terminal wiring diagrams. Number all terminals.
   8. After initial system commissioning and final calibration, provide copy of all block programming and sequences.

C. Furnish system wiring diagrams with sequence of operation for each system as specified.

D. Submit Manufacturer's product information on all hardware items along with descriptive literature for all software programs to show compliance with specifications.

E. Signed Software License Agreement: The Owner will be required to sign a copy of the Manufacturer's standard software and firmware licensing agreement as a condition of this Contract. Such license shall grant use of all programs and application software to the Owner, but shall protect the

Manufacturer's rights to disclosure of trade secrets contained within such software.

F. Operator Manuals: Provide (2) copies of an operator's manual describing all operating and routine maintenance service procedures used with the supplied TCS during the start-up and test period, as well as (1) compact disk (CD) containing a Portable Document Format (PDF) file of the manual.

G. Record Drawings: Upon completion of the work, provide a complete set of accurate as-built drawings and sequences, and application software and programming, submitted in hard-copy and on magnetic floppy disk or CD media. Drawings shall be AutoCad-compatible files.

## 1.07 WIRING RESPONSIBILITIES

A. Subcontractor shall provide control wiring incidental to TCS, 120 volt interlock wiring, low voltage interlock wiring, DDC sensors, and all conduit for these items. Wiring provided by the Subcontractor shall meet all requirements of Division 26.

B. Electrical Contractor shall provide all power wiring and conduit, as specified in Division 26.

## 1.08 WORK BY OTHERS

A. HVAC Contractor shall furnish outside and return air dampers as a part of the air-handling units.

## 1.09 QUALITY ASSURANCE

A. All electrical equipment and material and its installation shall conform to the current requirements of the following authorities:
   1. American Society of Heating, Refrigerating, and Air Conditioning Engineers (ASHRAE) 90.1.
   2. Electronic Industries Alliance (EIA).
   3. National Fire Protection Association (NFPA), including 2008 NFPA 70, "National Electrical Code® (NEC).
   4. American National Standards Institute (ANSI).
   5. National Electrical Manufacturers Association (NEMA).
   6. International Organization for Standardization (ISO) 9001.
   7. Occupational Safety and Health Act (OSHA).
   8. State of Ohio: Ohio Administrative Code (OAC):
      a. OAC 4101:1: 2011 Ohio Building Code.
      b. OAC 4101:2: 2011 Ohio Mechanical Code.

B. All distributed, stand-alone and unitary controllers supplied shall be in compliance with the following listings and standards:
   1. Underwriters Laboratories, Inc. (UL) 916 for Open Energy Management.
   2. Canadian Standards Association (CSA).
   3. German Association for Electrical, Electronic and Information Technologies (VDE).

4. Federal Communications Commission (FCC) Part 15, Sub Part B, Class A.
5. CE Electro-Magnetic Compatibility.

C. The Control System Manufacturer shall be ISO 9001 listed for design and manufacture of environmental control systems for precise control and comfort, indoor air quality, HVAC plant operation, energy savings and preventative maintenance.

D. Where (2) or more codes conflict, the most restrictive shall apply. Nothing in this Specification or related documentation shall be construed to permit work not conforming to applicable codes.

E. Provide satisfactory operation without damage at 10% above and 5% below rated voltage and at 3 hertz variation in line frequency. Provide static, transient, and short circuit protection on all inputs and outputs. Protect communication lines against incorrect wiring, static transients, and induced magnetic interference. All bus-connected devices shall be AC coupled, or equivalent, so that any single device failure will not disrupt or halt bus communication.

F. All devices designed for, or used in, line voltage applications shall be UL-listed. All microprocessor-based remote and central devices connecting onto the primary bus (including link devices) shall be UL 864-listed.

## 1.10 ACCEPTABLE MANUFACTURERS

A. Honeywell Building Solutions (telephone: 614-822-2449).

B. All BAS components and related temperature control components (sensors, transducers, relays, etc.) specified elsewhere, shall be provided by the same Manufacturer.

C. BAS components and related temperature control components shall be manufactured and installed by Honeywell or a factory-authorized representative.

## 1.11 WARRANTY

A. All temperature control devices and installation shall be warranted to be free from defects in workmanship and material for a period of (2) years from the date of job acceptance by the Owner. Any equipment, software, or labor found to be defective during this period, including 24-hour emergency service, shall be repaired or replaced without expense to the Owner. Factory authorized warranty service shall be available within (50) miles of job site.

## 1.12 SERVICE AND GUARANTEE

A. TCS modifications shall be free from defects in workmanship and material under normal use and service. After completion of the installation, the Subcontractor shall regulate and adjust all sensors, thermostats, control motors, and other equipment provided under its Contract. If within

(12) months from the Contract Completion, any of the equipment described is proved to be defective in workmanship or materials, it will be replaced free of charge by the Subcontractor, including 24-hour emergency service, unless due to misuse or abuse.

## PART 2 PRODUCTS

### 2.01 GENERAL REMARKS

A. All controls shall be fully proportioning, fail-safe, relay type capable of maintaining ±2 deg. F.

B. Engraved laminated plastic nameplates shall be provided for all control items, inside or outside of panels (1/4 in. high letters minimum); NO punchtape will be permitted.

C. All control devices shall have adjustable set points.

D. The new system shall be comprised of a network of various independent AACs and ASCs, together with the new web-based OWS, to provide centralized access and facility-wide control functions. AACs and ASCs shall be interconnected in the communicating network to provide facility-wide access and sharing of information.

### 2.02 AUXILIARY CONTROL DEVICES

A. Temperature Sensors:
   1. Temperature sensors shall be RTD or thermistor type as required.
   2. Duct sensors shall be rigid or averaging. Averaging sensors shall be a minimum of 5 ft. in length.
   3. Area space sensors shall be equipped with concealed setpoint adjustment and override switch. Others shall have blank covers. Provide thermostat guards over all sensors/thermostats.
   4. Optional: Each sensor shall be provided with a plug-in RJ-11 jack for a PPT. This jack shall be concealed under the cover to prevent tampering.
   5. Optional: The connection of a PPT device at a wall sensor location shall permit the service terminal to communicate with all other devices on the local communications network.
   6. Duct sensors shall protrude into the air stream a minimum of 9 in.
   7. RTSs shall have an accuracy of ±0.25 deg. F. in the range of 45 deg. F. to 96 deg. F.

B. Humidity Sensors:
   1. Duct and room sensors shall have a sensing range of 20% to 80%.
   2. Duct sensors shall have a sampling chamber.
   3. Outdoor air humidity sensors shall have a sensing range of 20% to 95% relative humidity and shall be suitable for ambient conditions of -40 deg. F. to 170 deg. F.
   4. Humidity sensors shall not drift more than 1% of full scale annually.

## PART 3 EXECUTION

### 3.01 INSTALLATION

A. All electrical work performed in the installation of the TCS as described in this specification shall be per 2011 NEC and applicable State Codes. Conduit shall be run parallel to building lines properly supported and sized at a maximum of 40% fill (minimum 3/4 in. conduit). Where conductors are concealed, cable listed for use in return air plenums may be used.

B. Low voltage wiring may be run exposed **ONLY** above accessible lay-in ceilings. All wiring run in air handling plenums shall be UL 910-listed. Wiring shall be run neatly, perpendicular to walls, away from piping, ductwork of other construction likely to damage the insulation, and securely clipped or fastened directly to the building structure. Unless otherwise noted, all low voltage and line voltage wiring shall be installed in conduit at the following locations:
   1. Where wiring rises up inside walls.
   2. Where wiring is run below floor.
   3. Where wiring is run through or above inaccessible ceilings or in chases.
   4. Where wiring is run below ceilings or in equipment rooms.
   5. Where run exposed.

C. All wiring installed in air-handling plenums shall be either UL 910-listed, Teflon coated, with plenum rated ties, or entirely in conduit.

D. Wiring and conduit shall meet all Division 26 requirements.

E. All temperature control and interlock wiring shall be installed in conduit or exposed above ceilings with UL 910 plenum-rated wire. Power and interlock wiring shall be run in separate conduit from sensor wiring.

F. **AS INDICATED ABOVE, WIRING SHALL BE RUN IN CONDUIT, REGARDLESS OF VOLTAGE.**

G. Wiring installation shall be acceptable to the Local Code Authority having jurisdiction.

H. Mount room sensors and thermostats at 54 in. above finished floor unless shown otherwise.

I. Provide locking plastic or aluminum guards over all wall-mounted thermostats and sensors.

J. Provide an insulated base for any thermostat located on an exterior wall.

K. All thermostats and control devices shall have adjustable setpoints.

L. Provide engraved laminated plastic nameplates for all controls, inside or outside of panels.

M. Label all control components to match diagrams. Label DDC panel.

N. Subcontractor shall oversee all final control connections to all equipment and controls.

## 3.02 CHECKOUT

A. Check the function of each item. Ensure that each item starts and functions properly.

## 3.03 CALIBRATION AND ADJUSTMENTS

A. In as much as controllers are factory-calibrated, and controlled devices have nominal operating ranges, different from actual field conditions, all controllers shall be calibrated and set for the actual field conditions. A listing of actual spring ranges on controlled devices such as for damper motors, etc., shall be included in the Operating and Maintenance Manual, for future recalibration/maintenance.

B. Calibrate all controls.

C. After completion of the installation, perform final calibrations and adjustments of the equipment provided under this Contract and supply services incidental to the proper performance of the temperature control system under warranty described in Part 1.

D. Return and make adjustments during guarantee period, at no charge.

## 3.04 ACCEPTANCE PROCEDURE

A. Upon completion of the calibration, start up the system, perform all necessary testing, and run diagnostic tests to ensure proper operation. Generate all software and enter all databases necessary to perform the sequence of control and specified software routines. Perform an acceptance test in the presence of the Owner and A/E.

## 3.05 WIRING

A. Subcontractor shall oversee all final control connections to all equipment and controls.

B. Subcontractor shall install all temperature control and interlock wiring in conduit or exposed above ceilings using UL 910 plenum-rated wire. Subcontractor shall run power and interlock wiring in separate conduit from sensor wiring.

C. Subcontractor shall provide control wiring incidental to TCS, including DDC wiring and all conduit for these items, unless otherwise noted.

D. Wiring provided by the Subcontractor shall meet all requirements of Division 26.

E. Electrical Contractor shall provide all power wiring and conduit, except as otherwise noted.

F. Electrical Contractor shall provide all smoke detectors.

## 3.06 SEQUENCE OF OPERATIONS

A. Refer to Section 23 09 93.

## TITLES, ABBREVIATIONS, AND SYMBOLS

| | |
|---|---|
| AAC/AACs | advanced application controller(s) |
| AH/AHs | air handler(s) |
| AHU/AHUs | air handling unit(s) |
| AO | analog output |
| ASC/ASCs | application-specific controller(s) |
| BAS/BASs | building automation system(s) |
| BC/BCs | building controller(s) |
| CAD | computer aided drafting |
| CAV | constant air volume |
| CD/CDs | compact disc(s) |
| CPU/CPUs | central processing unit(s) |
| CRT/CRTs | cathode ray tube(s) |
| CS/CSs | central station(s) |
| DCP/DCPs | digital control panel(s) |
| DD | dual duct |
| DDC/DDCs | direct digital control(s) |
| DDU/DDUs | digital display unit(s) |
| EEPROM/ EPROM/ PROM | (electrically) (erasable) programmable read-only memory |
| EF/EFs | exhaust fan(s) |
| EMS/EMSs | environmental management system(s) |
| EP/EPs | electric to pneumatic (units) |
| HWR | heating water return |
| HWS | heating water setpoint |
| I/O | Input/output |
| IAT/IATs | indoor air transmitter(s) |
| IP | Internet protocol |
| LAN/LANs | local area network(s) |
| LCD/LCDs | liquid crystal display(s) |
| LED/LEDs | light-emitting diode(s) |
| OS/OSs | operating system(s) |
| OWS/OWSs | operator workstation(s) |
| PC/PCs | personal computer(s) |
| PE/PEs | pneumatic to electric (units) |
| PI/PID | proportional plus integral (plus derivative) |
| POT/POTs | portable operator terminal(s) |
| PPT/PPTs | portable programmer terminal(s) |
| RH | relative humidity |
| ROS/ROSs | remote operation station(s) |
| RTD/RTDs | resistance temperature detector(s) |
| RTS/RTSs | room temperature sensor(s) |
| SCADA | supervisory control and data acquisition |
| TCS/TCSs | temperature control system(s) |
| TCU/TCUs | terminal control unit(s) |
| UCM/UCMS | unit control module(s) |
| UPS/UPSs | uninterruptible power supply(ies) |
| VAV | variable air volume |
| VFD/VFDs | variable frequency drive(s) |
| VTC/VTCS | variable air volume terminal controller(s) |

END OF SECTION 23 09 23

# SECTION 23 09 93

# SEQUENCE OF OPERATIONS FOR HVAC CONTROLS

## PART 1 GENERAL

### 1.01 PREFACE

A. **Terminology:** Temperature Controls Subcontractor is responsible for the Work described in this Section. In this Section, the term "Contractor" shall mean the Temperature Controls Subcontractor performing Work on this Project, unless otherwise noted.

### 1.02 RELATED DOCUMENTS

A. Section 23 05 00, "Common Work Results For HVAC."

B. Section 23 09 23, "Direct-Digital Control System for HVAC."

### 1.03 ABBREVIATIONS AND SYMBOLS

A. Refer to the list of abbreviations attached to this Section. Refer also to Section 23 05 00. All abbreviations may not necessarily apply to this Work.

### 1.04 SAFETIES

A. All safeties shall be wired in such a way that the unit fans cannot be turned on in HAND mode when any safety device is tripped.

### 1.05 INTERFACE RESPONSIBILITIES

A. Temperature Controls Subcontractor shall be responsible for the interface to the Facility Management System from pumps, heat pumps, dedicated outdoor air system (DOAS) units, variable air volume units, etc.

B. Every device in the system which executes control logic and directly controls HVAC equipment must conform to a standard BACnet Device profile as specified in ANSI/ASHRAE 135-2004, BACnet Annex L. Unless otherwise specified.

## PART 2 PRODUCTS (NOT APPLICABLE)

## PART 3 EXECUTION

### 3.01 HEAT PUMP UNITS

A. New FC Units:

1. Unit Manufacturer shall provide packaged factory-mounted unit controls, which shall sequence the DX cooling and heating to maintain a space temperature setpoint.

2. Unit Manufacturer shall provide a building automation system (BAS) BACnet communications interface.
   a. Temperature Controls Subcontractor shall provide wiring and termination of the BAS to the interface.
   b. Unit Manufacturer's Representative shall verify final terminations prior to start-up.
   c. Unit Manufacturer shall provide standard BACnet objects as required by the Temperature Controls Subcontractor for monitoring and control from direct-digital control (DDC) system. The Temperature Controls Subcontractor shall provide all programming required for the DDC system to fully monitor, adjust, and control these objects.

B. Occupied Mode:
   1. The units will be enabled base on the DOAS occupancy schedule or the optimum start program.
   2. During Occupied mode, Honeywell will send a flag to disable the ability to send the unit into unoccupied mode. This is to allow occupants to not shut down the Daikin system. During this schedule, the only way to go from occupied to unoccupied would be through the BAS.

C. Unoccupied Mode: In unoccupied mode the units will be off.
   1. The BAS will monitor the room temperature and will enable a unit if the room temperature drops below 65 deg. F. (unoccupied heating setpoint) or above 78 deg. F. (unoccupied cooling setpoint). These setpoints are adjustable and will be global for all units to allow high or lower setting to all fan coil units (FCUs) during after-hours or when on holidays (summer break). Ability will be provided to override a specific room if different parameters are needed at the graphical front-end.
   2. During unoccupied times, occupants will be able to use the thermostat to enable the system for a 2-hour override. This would allow a teacher to work late or on weekends as well as have parent/teacher conferences and use local control to turn on their Daikin system. Doing this would have no bearing on the DOAS unit that serves this area. For the administrative area (only), where some of the Daikin are too small to put enough load on the outdoor heat pumps, all the FCUs served by this specific heat pump will be enabled in after-hour usage.

D. Room Setpoint Adjustment:
   1. In heating mode, the room temperature setpoint will be allowed to be adjusted at the thermostat during occupied mode between 70 deg. F. and 74 deg. F. (adjustable limits from the BAS). If a user sets a value outside of this range, the BAS program will override it (e.g., if the setpoint is set to 76 deg. F., the BAS will send 74 deg. F.).
   2. In cooling mode, the room temperature setpoint will be allowed to be adjusted at the thermostat during occupied mode between 72 deg. F. and 76 deg. F. (adjustable limits from the BAS). If a user sets a value

outside of this range, the BAS program will override it (e.g., if the setpoint is set to 70 deg. F., the BAS will send 72 deg. F.).

E. Heat/Cool Unit Command: The BAS will compare the room temperature to the setpoint and activate the unit in heating or cooling mode. The Auto/Heat/Cool operation at the thermostat will be disabled. A 2 degree deadband will be provided between the modes. When the room setpoint is reached, the unit will be indexed off. For example, if the room temperature setpoint is 72 deg. F. and the unit is in heating mode, the unit will run in heating mode until the room temperature is at 72 deg. F. and the unit is disabled. The unit will be enable only if the temperature drops below 71 deg. F. (heating mode) or if the room temperature rises above 73 deg. F. (cooling mode). The unit will then be indexed ON in the appropriate mode (heating or cooling).

F. Additional items:
   1. The indoor fan will run continuously when the unit is indexed to off in occupied mode.
   2. The unit needs to remain in Heat or Cool mode for a minimum of 10 minutes before changing from one mode to another.
   3. The fan speed will be disabled at the Daikin stat and will be set to “auto” from a command from the BAS system. The user will not have the ability to change the fan speed locally.

G. The following points shall be monitored and alarmed for each indoor fan coil and/or outdoor heat pump, through the DDC system:
   1. Fan coil start/stop status.
   2. Compressor start/stop status.
   3. System alarm.
   4. Room temperature.
   5. Thermostat status.
   6. Air conditioning mode (heat/cool).
   7. Malfunction code.
   8. Filter status.
   9. Accumulated power of fan coil.

H. The following points shall be operator-adjustable and/or automatically reset by a DDC program:
   1. Heat pump start/stop operation.
   2. Fan coil start/stop operation.
   3. Air conditioning mode setting (heat/cool).
   4. Room temperature setting.
   5. Filter status reset.
   6. Air flow rate setting.

## 3.02 100% OUTSIDE AIR WITH ENERGY RECOVERY WHEEL (RTU-1)

A. Safeties: All controls shall incorporate the following hard-wired safeties where applicable:
   1. Unless noted otherwise, the Electrical Contractor shall provide and interlock smoke detectors for the unit to stop the air-handling unit fans when smoke is detected.
   2. Provide a supply and exhaust duct high-static-pressure safety on the unit. Provide a manually reset duct static-pressure switch, set at the maximum working pressure of the ductwork, to stop the RTU fans when the system pressure exceeds setpoint.
   3. Provide damper limit switches on the outside air dampers, and interlock switches with the supply fan. The supply fan shall be disabled until the damper is proven open.
   4. Provide damper limit switches on the exhaust air dampers, and interlock switches with the exhaust fan. The exhaust fan shall be disabled until the damper is proven open.
   5. Low-temperature-limit controller (freezestat) shall disable the unit. The heating coil valve shall open 100% and the heating run-around pump shall be enabled through software if not already running.

B. Fan Control:
   1. When the supply fan is indexed to start, the following sequence shall be executed:
      a. The outside air damper shall fully open.
      b. Contacts on the damper limit switches on the outside air damper shall close to enable the supply fan to start.
      c. Manual operation of the supply fan shall cause the outside air damper to fully open to prevent damage to the unit.
      d. The exhaust air damper shall fully open.
      e. Contacts on the damper limit switches on the exhaust air damper shall close to enable the exhaust fan to start.
      f. Manual operation of the exhaust fan shall cause the outside air damper to fully open to prevent damage to the unit.
      g. Once supply and exhaust fan status has been proven, discharge air control shall be enabled.
   2. Whenever the supply fan is de-energized, due to either a scheduled shutdown or a safety trip, the following sequence shall be executed:
      a. The supply fan shall be disabled, and the fan shall be stopped.
      b. The outside air damper shall close.
      c. The exhaust fan shall be disabled, and the fan shall be stopped.
      d. The exhaust damper shall close.

C. Mode Control:
   1. RTU shall have (4) different modes of operation, as listed below. Operating modes shall be automatically initiated through time-of-day schedules, application programs, or operator commands.

2. Unit heating/ cooling mode is base on the outside air temperature. If the outside air temperature is below 55 deg. F. (adjustable) with a 2 degree deadband, the unit is in heating mode.
3. Pre-Occupied Mode:
   a. RTU shall be controlled on its own Occupied/Unoccupied time schedule as defined at the operator workstation. BAS shall index unit to start in advance of the scheduled Occupied time, via an adaptive optimal start sequence. Unit shall enter a Morning Warm-Up Mode or Morning Cool-Down Mode.
   b. Morning Warm-Up Mode: During Morning Warm-Up Mode, the FCUs will be indexed to start, the RTU unit shall remain off.
   c. Morning Cool-Down Mode: During Morning Cool-Down Mode, the FCUs will be indexed to start, the RTU unit shall remain off.
   d. Should the space temperature not reach the occupied setpoint before the scheduled occupied time, or reach the setpoint too early, the adaptive optimal start sequence shall automatically adjust itself for subsequent starts.
   e. Heat pump units shall be in Occupied Mode during Pre-Occupied Mode.
4. Occupied Mode:
   a. Energy recovery wheel (ERW) control:
      1) The ERW shall be active whenever the unit is running and one of the following conditions exists:
         a) The outside air temperature has fallen 2 deg. F. below the discharge air temperature setpoint. ERW shall become active to provide pre-heating of outside air.
         b) The outside air temperature is above the exhaust air temperature. ERW shall become active to provide pre-cooling of outside air.
      2) When the ERW becomes active, it shall modulate the speed of the wheel as follows:
         a) Pre-Heating Mode: ERW shall modulate from minimum to maximum speed in sequence with the heating coil control valve to maintain the discharge air setpoint.
         b) Pre-Cooling Mode: ERW shall modulate from minimum to maximum speed in sequence with the DX coil to maintain the discharge air setpoint.
      3) When the ERW is not active, it shall be stopped.
      4) Purge Mode: When the unit is running, but the ERW is not operating, the ERW shall be cycled on at minimum speed for 5 minutes every hour to help keep the surface of the wheel clean.
   b. Discharge air control:
      1) In heating mode (OaTemp < 55 deg. F.): When the unit is started, the heating PID is enabled, the ERW is enabled and ramped up to 100% speed, and the heating valve shall open

to 100%. The heating valve shall slowly close to maintain the discharge air temperature. The discharge air temperature is reset based on the outside air as follows (all setpoints are adjustable):

a) OaTemp 65 deg. F. = 68 deg. F. DaTempSp
b) OaTemp 0 deg. F. = 85 deg. F. DaTempSp

2) In cooling mode (OaTemp > 55 deg. F.): If the outside air is below the return air temperature, the unit shall run in free cooling, DX is disabled., When the Pre-cooling mode is enabled, the cooling PID is enabled, the ERW shall modulate in sequence with the DX coil to maintain 55 deg. F. (adjustable) discharge air setpoint.

c. If any of the associated space humidity sensors go above 60% relative humidity, the discharge air temperature setpoint shall be set to 52 deg. F. (adjustable) until the humidity level returns to 58% relative humidity.

5. Unoccupied Mode: During the scheduled unoccupied times, the supply and exhaust fans shall be off.
6. Emergency Heat Mode:
   a. If any of the heat pump zones are unable to maintain space temperature due to mechanical failure or otherwise, the RTU shall be enabled to an Emergency Heat Mode. Emergency Heat Mode shall enable the discharge air temperature to be raised to 120 deg. F. (adjustable), and operate as in the Occupied Mode. In occupied mode if a room drops below 60 deg. F. (adjustable) or in unoccupied mode if a room drops below 55 deg. F. (adjustable), the RTU shall run in emergency mode.
   b. Emergency Heat Mode shall only be able to be initiated through the operator workstation via a software enable point. When this point is overridden, the operator workstation shall notify the operator through an alarm indication that this point is overridden and that the unit is operating in Emergency Heat Mode. The workstation shall continue to receive this alarm until the point is released back to normal operation.
7. ERW Defrost Control (only when OaTemp is below 32 deg. F.): If the ERW differential pressure rises above 1.2inWC, the defrost control is enabled. The ERW shall be set to 30% speed for 15 minutes.

D. The following points will be monitored and alarmed at the RTU controller and the BAS:
   1. Supply fan start/stop.
   2. Discharge air temperature.
   3. Return air temperature.
   4. Outside air temperature.
   5. Carbon dioxide ($CO_2$) setpoint (directly through DDC system).
   6. $CO_2$ — actual (directly through DDC system).
   7. Room $CO_2$ setpoint (each room).

8. Room $CO_2$ — actual (each room).
9. Discharge air relative humidity.
10. Return air relative humidity.
11. Outside air relative humidity.
12. Sample air relative humidity from (6) rooms.
13. Heat recovery wheel air temperature set point.
14. Heat recovery wheel frost control indication.
15. Discharge duct static pressure.
16. Supply air static pressure (2/3 of the way downstream).
17. Low limit status.
18. Heat recovery wheel status.
19. Heat recovery wheel speed.
20. Supply fan status.
21. Exhaust fan status.
22. Sensors Norm/Fail status-DDC loop parameters.
23. Filter Norm/Dirty.
24. Supply fan speed (HZ).
25. Exhaust fan speed (HZ).
26. Refrigerant suction temperature.
27. Outside air CFM — actual
28. Outside air CFM — setpoint.
29. Outside air damper position.
30. Exhaust/return air damper position.
31. Return air enthalpy.
32. Outside air enthalpy.
33. Heating water valve position.
34. Heating setpoint — Heat reset setpoint.
35. Cooling setpoint — Cool reset setpoint.
36. Economizer setpoint — Enthalpy changeover.
37. Supply duct static pressure setpoint.
38. Occupied/Unoccupied, etc., Mode schedule.
39. Heat disable.
40. Cool disable.
41. Heat/cool mode.

## 3.03 HOT WATER CABINET HEATERS (UNIT CONTROLLER)

A. A wall-mounted DDC sensor will cycle fan to maintain space temperature.
   1. The following points will be monitored at the controller and the BAS:
      a. Fan status.
      b. Room temperature.
   2. The following points will be operator-adjustable or automatically reset by a BAS program:
      a. Heating setpoint.
      b. Occupied/unoccupied mode.

## 3.04 VARIABLE VOLUME BOXES FOR DOAS UNITS (DDC)

A. Each box shall be provided with a multi-point flow sensor. Temperature Controls Subcontractor shall provide a DDC controller with an integral electric damper motor, a room $CO_2$ sensor, an air flow transducer, and a discharge air temperature sensor. The controller shall operate a PI loop based on $CO_2$ and a $CO_2$ setpoint (700 ppm) that sets a supply air flow setpoint between a fixed minimum and maximum. The volume damper shall modulate to maintain this CFM setpoint.
   1. The following points will be monitored and alarmed at the DDC system for EACH terminal box:
      a. $CO_2$ reading.
      b. $CO_2$ setpoint.
      c. Box airflow indication in CFM.
      d. Damper position.
   2. The following points will be operator-adjustable and/or automatically reset by a DDC system program for EACH terminal box:
      a. $CO_2$ setpoint.
      b. Box airflow in CFM.
      c. Minimum/maximum CFM flow rates.

## 3.05 HEATING COIL RUN-AROUND PUMP (ASSOCIATED WITH DOAS-1)

A. The pump shall operate whenever the outdoor temperature is below 35 deg. F. (adjustable), through the DDC system.

B. The 3-way heating water control valve shall modulate to maintain the desired heating discharge air temperature setpoint.

C. Pump start/stop and run status shall be monitored and alarmed at the AHU controller and at the BAS. An alarm is generated if the pump is enabled but the status remains off after 2 minutes.

## 3.06 GRAPHICS

A. The following system graphics are to be provided for operator interface. The minimum data points for the graphic are listed. Additional data points and diagnostic information may be presented in a text format linked from the main graphic.
   1. DOAS display points:
      a. Unit mode.
      b. Supply temperature and setpoint.
      c. Supply static pressure and setpoint.
      d. Space pressure.
      e. Percent or stages of cooling.
      f. Fan status.
      g. Percent fan modulation.
      h. Reset reference temperature.
   2. Cabinet heater display points:
      a. Fan status.

b. Zone temperature and setpoint.

3. VAV terminal display points and programmed setpoints:
   a. Zone temperature or $CO_2$ reading.
   b. Zone air flow and percent damper position.
4. Floor plan layouts: Zone temperatures for each fan coil sensor location.
5. Reset schedule and all setpoints shall be tabular format.

## 3.07 INITIAL SETPOINTS

A. The following is the initial setpoints that should be programmed. This can be adjusted to as need to optimize the system performance and the building operator's preferences.
   1. Occupied room temperature cooling: 74 deg. F.
   2. Occupied room temperature heating: 72 deg. F.
   3. Unoccupied room temperature cooling: 78 deg. F.
   4. Unoccupied room temperature heating: 65 deg. F.
   5. Cabinet heater zones:
      a. 68 deg. F. occupied.
      b. 65 deg. F. unoccupied.
   6. Minimum occupied outside airflow: 10% of design flow, $CO_2$ less than 600 ppm.
   7. Maximum occupied minimum outside airflow: (design OA per unit schedule), $CO_2$ greater than 900 ppm.
   8. Outside air enthalpy economizer lockout: 22 Btu/lb (adjustable).
   9. Minimum cooling supply air temperature: 55 deg. F. when space reference is above 75 deg. F.
   10. Maximum supply air temperature: 65 deg. F. when space reference is below 71 deg. F.
   11. Minimum supply static pressure: 1 in. WC.
   12. Maximum supply static pressure: 2.5 in. WC or as determined by air balance process.
   13. Space pressure: 0.08 in. WC.

## TITLES, ABBREVIATIONS, AND SYMBOLS

| | |
|---|---|
| AAC/AACs | advanced application controller(s) |
| AH/AHs | air handler(s) |
| AHU/AHUs | air handling unit(s) |
| AO | analog output |
| ASC/ASCs | application-specific controller(s) |
| BAS/BASs | building automation system(s) |
| BC/BCs | building controller(s) |
| CAD | computer aided drafting |
| CAV | constant air volume |
| CD/CDs | compact disc(s) |
| CPU/CPUs | central processing unit(s) |
| CRT/CRTs | cathode ray tube(s) |
| CS/CSs | central station(s) |
| DCP/DCPs | digital control panel(s) |
| DD | dual duct |
| DDC/DDCs | direct digital control(s) |
| DDU/DDUs | digital display unit(s) |
| EEPROM/ EPROM/ PROM | (electrically) (erasable) programmable read-only memory |
| EF/EFs | exhaust fan(s) |
| EMS/EMSs | environmental management system(s) |
| EP/EPs | electric to pneumatic (units) |
| HWR | heating water return |
| HWS | heating water setpoint |
| I/O | Input/output |
| IAT/IATs | indoor air transmitter(s) |
| IP | Internet protocol |
| LAN/LANs | local area network(s) |
| LCD/LCDs | liquid crystal display(s) |
| LED/LEDs | light-emitting diode(s) |
| OS/OSs | operating system(s) |
| OWS/OWSs | operator workstation(s) |
| PC/PCs | personal computer(s) |
| PE/PEs | pneumatic to electric (units) |
| PI/PID | proportional plus integral (plus derivative) |
| POT/POTs | portable operator terminal(s) |
| PPT/PPTs | portable programmer terminal(s) |
| RH | relative humidity |
| ROS/ROSs | remote operation station(s) |
| RTD/RTDs | resistance temperature detector(s) |
| RTS/RTSs | room temperature sensor(s) |
| SCADA | supervisory control and data acquisition |
| TCS/TCSs | temperature control system(s) |
| TCU/TCUs | terminal control unit(s) |
| UCM/UCMS | unit control module(s) |
| UPS/UPSs | uninterruptible power supply(ies) |
| VAV | variable air volume |
| VFD/VFDs | variable frequency drive(s) |
| VSD/VSDs | variable speed drive(s) |
| VTC/VTCS | variable air volume terminal controller(s) |

END OF SECTION 23 09 93

# SECTION 23 20 00

# HVAC PIPING AND PUMPS

## PART 1 GENERAL

### 1.01 DESCRIPTION

A. Provide piping, valves, and specialties as shown or required to completely install all HVAC systems on this Project.

B. Piping Drawings are schematic. Carefully coordinate final locations.

C. Contractor shall provide information on chases, sleeves, and openings required for its Work to other Contractors. Contractor shall assume cost and responsibility for all cutting and patching resulting from improper coordination of its Work.

D. Roof Openings:
   1. Furnish pipe boots for all piping penetrations through roof, except where detailed on the Drawings.
   2. General Trades Contractor shall install pipe boots, flash into roof construction, and make watertight.
   3. Coordinate all locations and sizes of roof penetrations for the HVAC Work.
   4. General Trades Contractor shall provide pipe openings through roof, provide flashing, and “roof in,” making absolutely watertight after piping is in place.
   5. Install piping.
   6. Provide weather-tight curb cap if piping cannot be put in place immediately.

### 1.02 QUALITY ASSURANCE

A. Standards:
   1. National Fire Protection Association (NFPA): 2011 NFPA 70, “National Electrical Code® (NEC),” Articles 110 and 408.
   2. American National Standards Institute (ANSI) B31.1, “Code for Power Piping.”
   3. American Society for Testing and Materials (ASTM).
   4. American Society of Mechanical Engineers (ASME), including Boiler and Pressure Vessel Code, Section IX, “Qualification Standard for Welding and Brazing Procedures, Welders, Brazers, and Welding and Brazing Operators.”
   5. American Welding Society (AWS).
   6. Ohio Administrative Code (OAC) 4101:1: 2011 Ohio Building Code.

## PART 2 PRODUCTS

### 2.01 UNIONS

A. In copper pipe: Bronze 150 lb. ground joint, solder end. (Do not use wrought copper unions.)
   1. Acceptable Manufacturers: Epco, Rockwell, Mueller, Chase, Crane, Dart, Flagg, or Nibco.

B. In steel pipe: Black malleable iron, 250 lb. bronze ground ball joint.
   1. Acceptable Manufacturers: Mueller, Chase, Crane, Epco, Fairbanks, Grinnell, or Stockham.

C. Dielectric: Material shall be compatible for the type of service.
   1. Acceptable Manufacturers: Epco, Capitol, Dart, Watts, or Vogt.

### 2.02 JOINTS

A. Threaded piping: Use NPT tapered threads. (ASME B1.20.1.)

B. Flanged: Cast iron or cast bronze, 125 lb. or higher as required
   1. Acceptable Manufacturers for dielectric flange and bolt isolators: Capitol, Crane, Dart, Epco, or Vogt.

C. Gaskets: Nonmetallic. 1/8 in. minimum thickness, fibrous type with double coat of graphite, asbestos-free, ASME B16.21, except use Type 304 stainless steel with carbon steel guide on high temperature piping systems. Use dielectric gaskets where joining dissimilar piping material.

D. Bolts and Other Hardware:
   1. Bolts for steel, cast iron, brass, and bronze, for 250 lb. SWP, and for 450 deg. F. or below: Carbon steel, with American Standard regular, square heads and American Standard heavy-hexagon, semi-finished nuts.
   2. Where equipment is installed outside, all hardware and bolts shall be stainless steel.
   3. ASME B18.21, Tee-head, high tensile steel bolts and nuts may be used in mechanical joint pipelines.

E. Filler Materials:
   1. Solder: Shall meet ASTM B32. Alloy Sn94 and Sn95 shall be used.
   2. Brazing: Shall meet AWS A5.8.
   3. Welding: Shall comply with AWS D10.12.

### 2.03 NIPPLES

A. Same weight and material as pipe with which they are used, except shoulder nipples shall be extra-heavy. Short nipples are not allowed.

### 2.04 ROOF BOOTS

A. Portals plus Quadrascal or Pipe Boot. Molded 1/16 in. thick EDPM roof boot, ozone-resistant, ultraviolet-resistant, with 3 in. base flange, conically shaped, watertight.

B. Furnish roof boots, and verify type with the General Trades Contractor before ordering. Final roof boot selection shall be fully compatible with roof construction system.

## PART 3 EXECUTION

### 3.01 INSTALLATION — PIPING

A. The following instructions apply to all piping systems, except where otherwise noted.

B. Arrange all piping in accordance with the best standards of the Trade, with vertical lines plumb, and horizontal runs parallel or perpendicular to the building walls.

C. Make connections to equipment as recommended by the Manufacturer or as detailed on the Drawings.

D. Install valves on each piece of equipment.

E. Do not make welded connections to equipment or valves.

F. Where connection size is smaller than piping, make reduction at final connection only. Do not reduce size of pipe drop.

G. Install all piping in a neat and workmanlike manner.

H. At time of erection, clean piping components of loose material.

I. Provide union or flange in final piping connection to each device or item of equipment, and elsewhere, as required to make-up or disconnect piping. Install each union or flange to permit removal of parts and equipment, and in a position permitting the device or equipment to be removed without disconnecting piping beyond the union or flange. Install union adjacent to each threaded valve.

J. Make reductions in piping lines with reducing couplings or weld fitting reducers.

K. Install piping so as to provide clearance for personnel passage, headroom, operation of doors or windows, equipment, electrical panels, lighting, and electrical outlets, or with the Owner's apparatus and equipment. Coordinate pipe runs and elevations with other Contractors before installation. Where interferences develop in field, pipes may need to be offset or rerouted as required to resolve interferences.

L. Provide offsets in system piping runs, additional fittings, necessary drains and valves, and devices required to complete the installation, or for the proper operation of the system. Exercise due and particular caution to determine that all parts of the work are quickly and easily accessible.

M. Do not install piping across, in front of, or below door openings, access panels, or lighting fixtures. Obtain instructions from the Architect if a conflict occurs.

N. Do not install piping within 36 in. in front of, above, over, or in the immediate vicinity of, electrical panels or other electrical equipment, as described in 2011 NEC 110 and 408. Where this is not possible, if approved in writing by the Architect, provide a sheet metal drip pan under piping to prevent water and condensate from running or dripping down on the electrical equipment, at no additional cost to the Owner.

O. Where any system piping runs or components are so placed as to cause or contribute to a conflict, they shall be rerouted and readjusted at the expense of the Contractor causing the conflict. Where a conflict arises, the Architect's decision shall be final in regard to the arrangement of equipment, ductwork, piping, etc.

P. Condensation drain lines shall be continuously sloped; trapping is expressly prohibited.

Q. Avoid trapping of piping.

R. Install pipes, valves, fittings, etc. requiring insulation with a minimum of 1/2 in. clearance between the finished covering and other work and between the finished covering of parallel, adjacent pipes.

S. Make changes in pipeline direction with fittings. Do not bend or spring piping. **Exception:** Refrigerant soft temper copper tubing lines.

T. Offset lines around columns, beams, and other obstructions as required. Where special conditions are encountered in field, the Architect shall decide arrangement and alignment of piping.

U. Install valves at service connections to equipment not provided with valves, and at branch lines from main lines.

V. Install all valves and unions so as to be accessible through a removable ceiling, or ceiling or wall access panels.

W. Isolate direct contact between pipe, fittings, flanges, and hangers or dissimilar metal by use of dielectric unions, shims, gaskets, coatings, or other approved methods.

X. Securely support all piping from structure with approved hangers, rods, brackets, and accessories.

Y. Where piping is installed in new masonry block walls, coordinate with the General Trades Contractor so piping enters the wall at a masonry joint wherever possible.

Z. Bullhead connections are not allowed.

AA. Where exposed pipes pass through walls, floors, or ceilings of finished rooms, provide chrome-plated escutcheons. Prime-coated black iron escutcheons may be used in unfinished rooms. Protect escutcheons from tool marks.

BB. Keep piping level, except where a slope is required. Use eccentric reducers to keep top of pipe level.

CC. Protect all piping, fittings, and valves from excessive tool marks.

DD. Cut pipe accurately, and work into place without forcing or springing.

EE. Remove burrs to full inside diameter of pipe by reaming.

FF. Conceal all pipes, except in equipment rooms, in rooms without ceilings, or where specifically directed otherwise.

GG. Install piping parallel to building walls, except where specifically shown otherwise.

HH. Install dielectric unions or dielectric flanges on all connections between copper tubing and steel pipe and between copper tubing and equipment having ferrous metal connection.

II. Do not install piping containing fluids subject to freezing in exterior walls, regardless of wall insulation location. Piping subject to freezing may be installed in unheated ceiling spaces only where specifically shown, immediately above the ceiling of a heated space, with building insulation closely packed above the piping to protect it from freezing. Contractor providing the piping shall ensure that vulnerable piping is protected against freezing.

JJ. At the end of each day's work, provide caps and/or plugs at all openings in installed piping for protection. Prevent the possibility of **ANY** foreign materials entering piping.

KK. Identify all piping installed under this Work as required in Section 23 05 53.

## 3.02 INSTALLATION — JOINTS

A. Threaded Pipe and Fittings:
   1. Ream pipe ends at threads to full cross-sectional area after cutting.
   2. Threads shall conform to ASME B1.20.1.
   3. Joints shall be made with TFE tape, applied to male thread only. **Option:** Use Permatex pipe dope.

B. Flanged Connections: Flanged joints shall be faced, square, and true. Install gaskets suitable for the operating temperature and pressure of the fluid or gaseous medium being piped.

C. Soldered and Brazed Connections:
   1. Joints shall have pipe or tubing end reamed to full inside diameter after cutting.
   2. Exterior of joint shall be smooth.
   3. Clean with steel wool.
   4. Apply flux to prevent oxidation.
   5. Apply solder or brazing filler material, and thoroughly heat to completely melt material and cause it to migrate completely over the mating surfaces.

6. Solder and brazing work shall comply with ANSI B31.1.

## 3.03 PIPING — CLEANING AND TESTING

A. After erection, and prior to putting in service, blow or flush lines free of loose materials.

B. Clean strainer screens and sediment pockets prior to putting lines in service.

C. Perform all tests and inspections before backfilling, or covering or concealing any piping.

END OF SECTION 23 20 00

# SECTION 23 21 00

# HYDRONIC PIPING AND PUMPS

## PART 1 GENERAL

### 1.01 RELATED DOCUMENTS

A. Section 23 05 16, “Expansion Fittings and Loops for HVAC Piping.”

B. Section 23 05 23, “General-Duty Valves for HVAC Piping.”

C. Section 23 05 48, “Vibration and Seismic Controls for HVAC Piping and Equipment.”

D. Section 23 05 53, “Identification for HVAC Piping and Equipment.”

E. Section 23 07 00, “HVAC Insulation.”

F. Section 23 20 00, “HVAC Piping and Pumps.”

### 1.02 DESCRIPTION

A. Piping:
   1. Extend the heating water piping system as shown on the Drawings.
   2. Condensation drain piping: Provide for condensation drain from each cooling coil.
   3. If other means of draining are not provided, install drain valves at all low points to permit complete draining of the heating water system.
   4. Clean out and flush new water piping systems.

B. Valves: Refer to Section 23 05 23 and to the Drawings.

C. Pumps: HVAC heating water run-around pumps: Provide pumps, complete with motors, piping, valves, and specialties, as shown on Drawings.
   1. Ratings and capacities:
      a. Operating point requirements: The operating point of each pump, at the conditions shown, shall be within (5) percentage points of the maximum efficiency on its impeller curve. The impeller furnished shall not exceed 85% of the largest diameter available for the pump casing furnished. The impeller curve shall be continuously rising throughout the range contained within its efficiency curves. Impeller curve peak shall be a minimum of 10% above the total head shown on the Drawings. The pump shall not overload the motor at any point on the impeller curve. Pump submittal shall include pump performance curves.
      b. Design conditions:
         1) Refer to the Drawings for pump application, gallons per minute, feet of head, revolutions per minute, horsepower, and other electrical requirements.

2) Unless otherwise noted, motor speeds shall not exceed 1,750 RPM.

c. Maximum operating parameters:

1) Pump characteristics shall not exceed the mechanical, hydraulic, and electrical design limits designated on Drawings.

2) In the event a different pump is used, the Contractor shall be responsible for the cost of all changes imposed upon other Contractors as a result of any changes in the pump or motor size, and shall determine and coordinate those changes.

2. Motors:

a. Each pump shall be provided with high-efficiency motors.

b. Unless otherwise noted, high-efficiency motors shall be NEMA Design B, continuous rated with 1.15 service factor, with Class F insulation and Class B temperature rise, copper windings and leads, 1,750 RPM with the horsepower indicated on the Drawings. All motors shall be equipped with ball bearings.

D. Provide the following water-piping specialties as shown or required to complete the installation of all HVAC water systems installed on this Project:

1. Air vents, automatic.
2. Pressure/temperature taps.

E. Test complete system.

## 1.03 QUALITY ASSURANCE

A. Standards:

1. American National Standards Institute (ANSI).
2. American Society for Testing and Materials (ASTM).
3. American Society of Mechanical Engineers (ASME).
4. American Society of Sanitary Engineers (ASSE).
5. American Welding Society (AWS).
6. Hydraulic Institute.
7. National Electrical Manufacturers Association (NEMA).
8. Underwriters Laboratories, Inc. (UL).
9. U.S. Environmental Protection Agency (EPA).

# PART 2 PRODUCTS

## 2.01 PIPING

A. For all sizes: Schedule 40 seamless or electric welded steel (ASTM A53, Grade A).

1. **Option:** Schedule 40 black steel (ASTM A53CW).
2. **Option**: Type “L” seamless hard copper tubing (ASTM B88).

B. Condensation Drain: Type “L” seamless hard copper tubing (ASTM B88). Insulation: Refer to Section 23 07 00.

## 2.02 JOINTS

A. Fittings shall be factory manufactured.
   1. 2 in. and smaller: Malleable iron, Class 150 lb. SWP, threaded (ASME B16.3), or forged steel welded. **Option**: Schedule 40, forged steel, socket-welded and threaded. (ASME B16.11).
   2. **Option** for copper piping: Wrought copper solder fittings (ASME B16.22).
   3. **Option** for copper piping: Copper press fittings conforming to the material and sizing requirements of ASME B16.18 or B16.22. EPDM construction O-rings.

B. Condensation Drain:
   1. Wrought copper or wrought bronze solder fittings (ASME B16.11).
   2. Copper press fittings conforming to the material and sizing requirements of ASME B16.18 or B16.22. EPDM construction O-rings.

## 2.03 SOLDER

A. Copper Pipe: ASTM B 32, Alloy Sn94 or Sn95.
   1. Acceptable Manufacturers: Engelhard, J. W. Harris, or Oatey.

B. Condensation Drain: 95/5 Tin-Antimony.

## 2.04 PIPE CLEANING SOLUTION

A. Acceptable Manufacturers: Metropolitan CS Cleaner #35 or approved equal by Pure Environmental or Boiler Tech.

## 2.05 PUMP, IN-LINE

A. Close-coupled, grease-lubricated centrifugal pump with cast iron casing, steel shaft, thrust collar, grease lube ball bearings, bronze impeller, bronze case wearing ring, 250 deg. F., 175 PSIG, mechanical seals, and ODP motor.

B. Acceptable Manufacturers: Bell & Gossett Series 60 or approved equal by Peerless, Aurora, Weinman, Thrush, Taco, Armstrong, or Grundfos.

## 2.06 AIR VENTS, AUTOMATIC

A. Bell & Gossett #7. Automatic air vent with 3/8 in. ball valve shut-off.

B. Other Acceptable Manufacturers: Approved equal by Amtrol, Armstrong, or Taco.

## 2.07 PRESSURE/TEMPERATURE TAPS

A. 1/4 in. NPT fittings to receive either a temperature or pressure probe, 1/8 in. outside diameter. Brass fitting and caps, with Nordel valve core, rated at 1,000 PSIG.

B. Furnish the following items to the Owner:
   1. (1) 5 in. stem thermometer with range of 30 deg. F. to 240 deg. F.
   2. (2) pressure gauge adapters with 1/8 in. outside diameter probes.
   3. (1) pressure gauge, 0 PSIG to 100 PSIG range.

C. Acceptable Manufacturers: Peterson Engineering Company “Pete’s Plugs” or approved equal by Sisco Plugs, or Flow Design Super Seal.

## PART 3 EXECUTION

### 3.01 INSTALLATION — PIPING

A. Install all piping systems with adequate provisions for expansion, contraction, and vibration, and for prevention of stresses on valves and equipment.

B. Provide adequate pipe anchors, guides, and supports from building structure.

C. Install copper press fittings in accordance with Manufacturer’s written instructions using Manufacturer’s approved tools.

D. Manually vent system during initial fill, using vent cocks, to avoid damaging ceilings, etc.

E. At completion, bleed air from all systems. Report all information on air venting to the Engineer.

F. Condensation Drain:
   1. Provide condensation drain piping from outlets on drain pans of cooling coils. Run independently to floor drain, or as shown on the Drawings.
   2. Trap all cooling coil condensation drain lines at unit. Install removable insect screen at termination, if taken outside. Refer to Manufacturer’s instructions.
   3. Height of water in condensate traps shall be equal to static pressure available at the drain pan plus a minimum of 2 in. Refer to Detail.
   4. Pitch all condensation lines down a minimum of 1 in. in 30 ft. in the direction of flow.
   5. Provide cleanouts consisting of plugged tees at all changes of direction, including at traps.

G. Refer to Section 23 20 00 for additional requirements.

### 3.02 INSTALLATION — JOINTS

A. Refer to Section 23 20 00.

### 3.03 INSTALLATION — PUMPS

A. Install pump isolators as discussed in Section 23 05 48.

B. Install an isolation valve on each side of pumps to permit removal of pumps without draining the entire system.

C. Provide a spare set of mechanical seals for each pump.

## 3.04 INSTALLATION — SPECIALTIES

A. Install specialties at locations shown on the Drawings, as discussed in other Sections of the HVAC Specifications, and as required to facilitate the maintenance, operation, and servicing of all HVAC piping systems.

B. Air Vents:
   1. Install air vents after system is operable.
   2. Install a 3/8 in. ball valve at each air vent.
   3. Automatic air vents: Install at all high points, on mains at 100 ft. maximum intervals, on branch lines to units, and at all points where horizontal piping turns down in flow direction.

C. Pressure/Temperature Taps:
   1. Provide at each coil inlet and outlet.
   2. Where piping is to be insulated, install taps in order to permit access.

## 3.05 PIPING — TESTING, CLEANING, AND FILLING

A. Perform all tests and inspections before covering or concealing any piping.

B. Heating Water Piping:
   1. For heating water piping, do not fill with water until heat source is ready for operation.
   2. Blow or flush lines free of loose materials.
   3. Close all 2-way control valves. Fill system with water and test at 125 psig for (6) hours. Visually check piping for leaks while pressurized; repair leaks and repeat test. If there is no drop in pressure and there are no visible leaks, system passes test. If pressure falls, locate and repair leaks; retest.
   4. After the 125 psig test has been passed, open 2-way control valves, and retest the entire system at 60 psig for (6) hours. Visually check piping for leaks while pressurized; repair leaks and repeat test. If there is no drop in pressure and there are no visible leaks, system passes test. If pressure falls, locate and repair leaks; retest.
   5. Repair leaks by remaking defective joints, replacing defective piping sections, and replacing defective fittings at no cost to the Owner.
   6. Flushing, cleaning, filling, and treating:
      a. Flush new water piping to remove dirt and grease from pipes and equipment. Completely fill and circulate through new water piping for (8) hours at design temperature with pipe cleaning solution. Maintain flushing velocity of at least 6 ft./second. Clean strainers until they remain clean.
      b. Flush system with corrosion-inhibitor solution.
      c. Completely drain and refill system with fresh, clean water.
      d. Check pH and add water treatment chemical solution as recommended by the Water Treatment Chemical Supplier.
      e. Remove air from entire system.
      f. Check water treatment chemical levels; adjust treatment as necessary.

7. For condensation drain piping, flush piping with clean water only; no additional flushing, cleaning, filling, and treating is required.

C. Disposal of Chemical Solutions:
   1. **DO NOT DRAIN HYDRONIC PIPING CLEANING SOLUTION INTO SANITARY OR STORM SYSTEMS.**
   2. Collect all chemical solutions drained from hydronic piping systems, and dispose off site in accordance with EPA regulations.

## 3.06 WIRING

A. Pumps: Electrical Contractor shall provide disconnect switches, starters, and power and interlock wiring.

END OF SECTION 23 21 00

# SECTION 23 23 00

# REFRIGERANT PIPING

## PART 1 GENERAL

### 1.01 RELATED DOCUMENTS

A. Section 23 05 23, “General-Duty Valves for HVAC Piping.”

B. Section 23 07 00, “HVAC Insulation.”

C. Section 23 20 00, “HVAC Piping and Pumps.”

D. Section 23 21 00, “Hydronic Piping and Pumps.”

### 1.02 DESCRIPTION

A. Provide refrigerant piping between the indoor fan coil units and the outdoor heat pumps. Size refrigerant piping according to Manufacturer’s recommendations. Install oil and refrigerant charge.

B. Provide accessories, including liquid line dryer, expansion valve, sight glass, and charging valves, if not packaged with units.

C. Refer to Section 23 07 00 for insulation requirements.

D. Test systems.

## PART 2 PRODUCTS

### 2.01 PIPING

A. Hard drawn, Type “ACR” copper tubing (ASTM B88), cleaned, and capped.

### 2.02 FITTINGS

A. Wrought copper or wrought bronze fittings (ANSI B16.22) with joints brazed.

### 2.03 BRAZING ALLOYS

A. 45% silver/phosphorous or silver/zinc alloys with a melting point greater than 1,000 deg. F.

B. Acceptable Manufacturers: Sil-Fos by Handy Harmon, Aircosil by Airco Welding Products, or ESAB Allstate.

### 2.04 SERVICE VALVES

A. Acceptable Manufacturers: Henry Technologies Type 203 or approved equal by Mueller or Sporlan.

### 2.05 FLEXIBLE CONNECTORS

A. Corrugated stainless inner tube with braided outer shield, 500 lb. maximum working pressure, sweat connections.

B. Acceptable Manufacturers: Metraflex, Flexonics, Flexicraft, or Hyspan Precision Products.

## PART 3 EXECUTION

### 3.01 INSTALLATION

A. Install refrigerant piping and refrigerant specialties according to recommendations of Manufacturer of fan coils and heat pumps.

B. Clean ends immediately before brazing joints. Maintain a continual flow of inert gas (nitrogen) through the tubing while brazing joints. Plug ends to exclude dirt and foreign matter during construction.

C. Install flexible connectors in piping connections to heat pumps.

D. Refer to Sections 23 05 23, 23 20 00, and 23 21 00 for additional requirements.

### 3.02 TESTING

A. All testing shall be performed in strict accordance with the Equipment Manufacturer's guidelines. Schedule well in advance with the Construction Manager.

B. Do not perform any tests when outside air temperature is below 65 deg. F.

C. After refrigerant piping system is completed, but before insulation is applied, thoroughly test the system for leaks. Inert gas at 450 PSIG may be used for initial test.

D. After system is tight, evacuate all inert gas. During evacuation, all Schrader valves shall be capped, rate not to exceed 2 in. Hg. per second. Perform triple evacuation procedure in accordance with trade standard. Leave 20 PSIG minimum static charge of nitrogen in refrigeration system for layover period, until properly charged.

E. Provide full refrigerant charge in the systems for proper operation. Test systems for leaks with halide leak detector after installation of refrigerant. Replace all defective materials. Completely redo leaking joints. Perform entire testing procedure again.

F. Test shall be witnessed by the Manufacturer's Representative and the Architect.

END OF SECTION 23 23 00

# SECTION 23 31 00

# HVAC DUCTS AND CASINGS

# (HANGERS AND SUPPORTS)

## PART 1 GENERAL

### 1.01 RELATED DOCUMENTS

A. Section 23 05 16, “Expansion Fittings and Loops for HVAC Piping.”

B. Section 23 05 29, “Hangers and Supports for HVAC Piping and Equipment.”

### 1.02 DESCRIPTION

A. Provide support steel, attached to building structure, as necessary, to support ductwork. Provide supports between structural members, such as steel angles, channels, unistrut, etc., as required, except where specifically called out to be provided by the General Trades Contractor. Obtain prior written approval of the Architect.

B. Refer to Structural and Architectural Drawings to determine what supports are provided by the General Trades Contractor.

C. For any variation in supports needed for equipment actually purchased, Contractor shall bear all costs of modifications, including redesign costs.

D. Provide angles, clips, mechanical fasteners, reinforcement steel, drilling of structure, welding to structure, etc. as needed. Means of attachment shall be approved by the Architect and shall not degrade the structure.

E. Provide hangers and supports required for ductwork and equipment installed under the HVAC Contract, unless otherwise noted.

F. Provide all necessary inserts, expansion shields, beam clamps, and auxiliary steel.

G. Furnish roof curbs and rails.

H. Inserts in Masonry Construction with Voids: Install appropriately sized all-thread rods within a 2-component polyester resin adhesive used in conjunction with a galvanized metal screen. Install rods in holes drilled with carbide-tipped drill bits.

I. Inserts in Masonry and Concrete:
   1. Provide the correct size and type of concrete inserts, along with information on their correct location, to the General Trades Contractor, so as not to delay construction.
   2. Concrete Installations: Before pouring, the Contractor shall furnish concrete inserts (when used or required) for its Work to the General Trades Contractor, who shall install where directed by the Contractor.

3. Precast Flexicore Concrete: Provide concrete inserts, toggle bolts, etc., as required for HVAC Work.

## 1.03 QUALITY ASSURANCE

A. Standards:
1. American National Standards Institute (ANSI).
2. American Society for Testing and Materials (ASTM).
3. American Society of Mechanical Engineers (ASME).
4. Factory Mutual Global (FMG).
5. National Fire Protection Association (NFPA).
6. Sheet Metal and Air Conditioning Contractors National Association (SMACNA).
7. Underwriters Laboratories, Inc. (UL).

B. For ductwork supports, refer to SMACNA's "Duct Construction Standards" (Latest Edition), as applicable.

C. Components shall be selected and matched to the load imposed on them.

# PART 2 PRODUCTS

## 2.01 PIPING HANGERS AND SUPPORTS

A. Refer to Section 23 05 29.

## 2.02 TRAPEZE HANGERS

A. Unistrut P1000 or Superstrut A1200. Angle iron, or channel of sufficient length to support ductwork, trapeze hanger rod diameter, and quantity as required to support total duct load.

B. Design support system and obtain approval of a Structural Engineer licensed in Ohio. Submit details to the Architect for approval.

C. Acceptable Manufacturers: B-Line Systems, Inc., GS Metals Corp., Erico/Michigan Hanger Co., Inc., National Pipe Hanger Corp., Unistrut Corp., Wesanco, Inc., or Powerstrut.

## 2.03 SUPPORTS

A. Hanger rods shall be solid steel, threaded ends or all-thread rods, with double nut attachment to the hanger and at the hanger attachment.

B. Beam Clamps:
1. Anvil Fig. 227. Top beam clamp, steel jaw, hook rod with nut, and spring washer steel eye-bolt, with Anvil Fig. 157 for appropriate rod diameter.
2. **Option:** Anvil Fig. 86. Malleable iron clamp, hardened steel cup point set screw with Fig. 89 steel retaining clip. **C-CLAMPS WITHOUT RETAINING CLIPS ARE EXPRESSLY PROHIBITED.**

C. Wall Brackets: Carbon steel, back plates, and bolts.
1. Anvil Fig. 194. Lightweight 750 lb. load.

2. Anvil Fig. 195. Medium-weight 1,500 lb. load.
3. **Option:** Unistrut Superstrut A1200.

D. Acceptable Manufacturers: Anvil International, Inc., B-Line Systems, Inc., Carpenter & Patterson, Inc., Globe Pipe Hanger Products, Inc., Erico/Michigan Hanger Co., Inc., National Pipe Hanger Corp., PHD Manufacturing, Inc., or Klo-Shure.

## 2.04 ROOF CURBS AND RAILS

A. Prefabricated curb, 18 ga. galvanized steel, welded seams, mitered corners. 2 in. thick rigid fiberglass insulation, treated wood nailer strip, damper flanges, minimum 12 in. high.
   1. Acceptable Manufacturers: Pate Co. or approved equal by ThyCurb Vent Products Co., Inc. or MicroMetl.

B. Heat Pump Units: Prefabricated, 18 ga. galvanized steel, integral base plate, continuous welded corner seams, wood nailer, counterflashing with lag screws, internal reinforcing as required to support equipment load, minimum 13 in. high.
   1. Acceptable Manufacturers: Pate Co. or approved equal by ThyCurb Vent Products Co., Inc. or MicroMetl.

## 2.05 STRUCTURAL STEEL

A. Provide ASTM A36 / ASTM A36M, black and galvanized, steel plates, shapes, and bars, steel beams, unistrut, standard-weight black steel pipe, or steel angle of adequate size and strength to safely carry the weight of equipment item.

## 2.06 FINISH

A. Unless otherwise noted, all steel hangers and supports shall be standard black. **Exception:** Hangers and supports for exposed exterior applications shall be galvanized.

## 2.07 CONCRETE INSERTS

A. In Poured Concrete: Anvil Fig. 282. Malleable iron, universal mounting, lateral adjusting.

B. In Precast Concrete: Anvil Fig. 117, Hilti, or Philips. Malleable iron, expansion case, interior standard pipe threads, external helical wedge.

C. Acceptable Manufacturers: Anvil International, Inc., B-Line Systems, Inc., Carpenter & Patterson, Inc., Globe Pipe Hanger Products, Inc., Erico/Michigan Hanger Co., Inc., National Pipe Hanger Corp., PHD Manufacturing, Inc., or Klo-Shure.

D. Refer to Manufacturer's recommendations for correct selection as to duct size and loading. Confirm with the General Trades Contractor that the concrete used is of a sufficient strength to hold the insert. Use inserts.

## PART 3 EXECUTION

### 3.01 INSTALLATION — DUCTWORK HANGERS

A. Attach all ductwork securely to structure, floor, or concrete pad.

B. Install all necessary duct hangers, supports, clamps, wall brackets, and attachments as required to properly support ductwork from building structure.

C. Install necessary hanger rods and angle iron support brackets to properly support ductwork, flue vent, insulation, reinforcing, and external loads.

D. Install hangers and supports with all necessary inserts, bolts, rods, nuts, washers, and other accessories, according to Manufacturer's recommendations. Hangers shall be double-nutted.

E. Use a pair of rods, (1) on each side of ductwork. Rods shall be uncoated hot-rolled steel.

F. Use sheet metal screws to attach hanger bracket to ductwork.

G. **Option:** 1 in. wide solid sheet metal straps may be used as per SMACNA's "Duct Construction Standards" (Latest Edition).

H. **DO NOT USE POWDER-ACTUATED ANCHORS OR FASTENERS.**

I. **DO NOT USE C-CLAMPS WITHOUT RETAINING CLIPS.**

J. Maximum spacing of supports shall be as follows:

**RECTANGULAR DUCTS**

| 1/2 X DUCT PERIMETER | ROD DIAMETER | SPACING |
|---|---|---|
| Less than 72 in. | 1/4 in. | 10 ft. |

**ROUND DUCTS**

| DUCT DIAMETER | ROD DIAMETER | SPACING |
|---|---|---|
| Up through 26 in. | 1/4 in. | 12 ft. |

K. Provide proper angles or channels between structural members for hanger supports where necessary. Weld to steel structural members. Consult with the Architect regarding this procedure.

L. Trapeze Hangers:
   1. All rods on trapeze hangers shall be 1/2 in. minimum.
   2. Clamp each duct individually.
   3. Provide individual duct attachment to each Unistrut hanger, angle, or channel.

M. Do not support hangers from roof deck or floor above. Span from structural members with supplementary steel where direct attachment to structural members is not practical.

N. Ceilings:
   1. Do not support ductwork, or any other utility lines, from ceiling and ceiling grid systems.
   2. Ductwork, and each ceiling and ceiling grid system, shall be a separate installation. Independently support each from the building structure.
   3. Where interferences occur, in order to support ductwork or flue vents, install trapeze-type hangers or supports. Locate them where they do not interfere with access to fire dampers, valves, and other HVAC equipment items.
   4. Install additional ceiling hangers where the ceiling supports grilles, registers, or diffusers, as required to prevent the ceiling from sagging.

O. Use top flange beam clamps to avoid burning metal deck.

P. Painting:
   1. Touch-up:
      a. Clean field welds, bolted connections, and abraded areas of all shop paint.
      b. Paint exposed areas immediately after erecting hangers and supports.
      c. Use same paint materials as used for shop painting.
      d. Apply paint by brush or spray to provide a minimum dry film thickness of 2.0 mils.
   2. Galvanized surfaces: Clean and apply galvanizing repair paint to comply with ASTM A780.

## 3.02 INSTALLATION — ROOF CURBS

A. Verify roof slope and type before ordering curbs.

B. Provide all necessary dimensions of HVAC equipment unit to the General Trades Contractor.

C. Furnish curbs and deliver on roof.

D. General Trades Contractor shall cut and frame openings, provide reinforcing of structure as needed to support loads, provide blocking under curbs, set roof curbs in place, shim to level, secure to roof deck, provide flashing, and “roof in” as required.

E. DOAS Units: General Trades Contractor shall not cut away entire roof deck under but shall cut only as required for ducts.)

F. Provide weathertight curb caps, if units cannot be set in place immediately.

G. General Trades Contractor shall counterflash roof curbs as required to make absolutely watertight.

H. Install additional 6 in. fiberglass batt insulation and (2) layers of drywall inside curb for sound attenuation.

## 3.03 INSTALLATION — CONCRETE

A. Avoid cutting concrete or masonry by using inserts.

END OF SECTION 23 31 00

# SECTION 23 31 13

# METAL DUCTS

# (LOW-VELOCITY)

## PART 1 GENERAL

### 1.01 RELATED DOCUMENTS

A. Section 00 72 16, “General Conditions.”

B. Section 23 05 15, “HVAC Sleeves.”

C. Section 23 05 48, “Vibration and Seismic Controls for HVAC Piping and Equipment.”

D. Section 23 07 00, “HVAC Insulation.”

E. Section 23 31 00, “HVAC Ducts and Casings (Hangers and Supports).”

F. Section 23 33 00, “Air Duct Accessories.”

G. Section 23 33 13, “Dampers.”

H. Section 23 37 00, “Air Outlets and Inlets.”

### 1.02 DESCRIPTION

A. Provide low-velocity ductwork, including turning vanes, extractors, splitter-dampers, volume dampers, access doors, and flex connections, for the following:
   1. Supply air.
   2. Return air.

B. Duct Dimensions:
   1. The dimensions indicated on the Drawings are the **NET INSIDE CLEAR DIMENSIONS** available for air flow.
   2. Allow for shop-lined or exterior insulation thickness as required.

C. Shop-Lined Ductwork:
   1. Shop-line rectangular return ducts, where noted on the Drawings.
   2. Refer to Section 23 07 00 for insulation materials and installation requirements, or where noted on the Drawings.
   3. Increase duct sizes accordingly to accommodate higher friction loss associated with duct liner.

D. Ductwork layout is schematic; provide duct risers, drops, offsets around obstructions, flattened sections, etc., and all fittings as necessary to install the ductwork.

## 1.03 QUALITY ASSURANCE

A. Standards:
   1. National Fire Protection Association (NFPA): 2011 NFPA 70, "National Electrical Code® (NEC)."
   2. Underwriters Laboratories, Inc. (UL).
   3. Sheet Metal and Air Conditioning Contractors National Association (SMACNA), including "HVAC Air Duct Leakage Test Manual," and "HVAC Duct Construction Standards — Metal & Flexible," Third Edition, 2005. These are absolute **MINIMUM STANDARDS;** some requirements listed herein may be greater than these. Duct construction shall meet or exceed the more stringent standards.
   4. American Society of Heating, Refrigerating, and Air Conditioning Engineers (ASHRAE):
      a. Applicable requirements in ASHRAE 62.1-2007, Section 5, "Systems and Equipment," and Section 7, "Construction and System Start-Up," including Section 7.2.4, "Ventilation System Start-Up."
      b. Applicable requirements in ASHRAE/IESNA 90.1-2007, Section 6.4.4, "HVAC System Construction and Insulation," including Section 6.4.4.2.1, "Duct Sealing," and Section 6.4.4.2.2, "Duct Leakage Tests."
   5. Illuminating Engineering Society of North America (IESNA).
   6. American Society for Testing & Materials (ASTM) C 920.

## 1.04 PERFORMANCE REQUIREMENTS

A. Airstream Surfaces: Surfaces in contact with the airstream shall comply with requirements in ASHRAE 62.1-2007.

## 1.05 SUBMITTALS

A. Submit ductwork layout shop drawings to the Architect for review. Coordinate size and location of ductwork and insulation with structure, piping, lighting, equipment, conduit, cable trays, ceiling construction and clear height above, and other items that may present a potential conflict. For shop-lined insulation work, refer to Section 23 07 00.

B. Layout drawings shall be at 1/8 in. = 1 ft.-0 in. scale, (or larger, if Contract Drawings are larger,) with enlarged sections and elevations as necessary.

C. All Contractors shall use these drawings as a basic coordination tool.

D. During the bidding period, notify the Architect of any conflicts observed between the ductwork and the work of any other Trade.

E. Refer to Section 00 72 16 for additional requirements.

## PART 2 PRODUCTS

### 2.01 DUCTWORK — STEEL

A. SMACNA Section I. Galvanized steel, 24 ga. through 16 ga., intermediate reinforcing bracing, slip joints, mechanical formed seams, beaded, and cross-broken.

B. Elbows, Branches, Transitions, Offsets: SMACNA Section II. Round duct fittings shall be conical with scoops at branch takeoffs. Round elbows shall be 3-piece type.

C. Turning Vanes: SMACNA Section II, Fig. 2-3. Tuttle & Bailey "Duct-Turns." Double-thickness airfoil.
   1. Other Acceptable Manufacturers: Approved equal by Titus or Anemostat.

D. Equipment Casings, Flexible Connections, Curbs, Plenum Access Doors: SMACNA Section VI.

E. Hangers, Attachments, and Supports: SMACNA Section IV.

### 2.02 DUCTWORK — ROUND SPIRAL SEAM

A. SMACNA Section III. United Sheet Metal "Spiral Duct." Galvanized steel (ASTM A527), 26 ga. through 20 ga., spiral seam, up to 60 in. diameter. Use 16 ga. welded joint, for sizes above 60 in. diameter. Fittings shall be continuously welded, including elbows, tees, laterals, crosses, reducers, offsets, and accessories.

B. Other Acceptable Manufacturers: Approved equal by Semco, Wesco, Lindab, Tangent Air, or Eastern Sheet Metal.

### 2.03 DUCTWORK — FLEXIBLE

A. Refer to Section 23 33 00.

### 2.04 DUCT LINERS

A. Refer to Section 23 07 00.

### 2.05 DUCT CONNECTIONS — FLEXIBLE

A. To Diffusers (maximum 5 ft. long): Flexmaster Type 3M. Insulated with a trilaminate of aluminum foil, fiberglass, and aluminized polyester. Fire-retardant-reinforced aluminum outer jacket. 12 in. positive pressure rating.

### 2.06 DUCT ACCESS DOORS

A. Ward Industries. 20 ga. steel, UL-listed, reinforced, insulated and fully gasketed, and completely airtight.

B. Motorized: Provide rectangular door equal to width of duct minus 1 in. in one direction, and at least 12 in. in the other direction. Larger size, if noted.

C. Provide **QUICK-OPENING LATCHES OR WING NUTS.**

## 2.07 DAMPERS

A. Refer to Section 23 33 13 for motor operators, conical take-off, and extractors, and for balancing, control, backdraft, pressure relief, and splitter dampers.

## 2.08 HANGERS AND SUPPORTS

A. Refer to Section 23 31 00.

# PART 3 EXECUTION

## 3.01 INSTALLATION

A. Install ductwork in compliance with all recommendations of applicable SMACNA Section.

B. Do not install ductwork within 36 in. in front of, above, over, or in the immediate vicinity of, electrical panels, electrical switchgear, or other electrical equipment, as described in 2011 NEC Articles 110 and 408.

C. Keep ductwork as tight as possible to underside of structure or floor or roof above. Maintain at least 7 in. clear between duct or duct insulation and suspended acoustical tile ceiling, where recessed can light fixtures occur.
   1. **Option:** Route duct to clear light fixtures. Maintain additional clearance where recessed lights occur. Otherwise, provide 3 in. minimum clearance above bottom of ceiling.

D. Rigidly brace all ducts.

E. Install a minimum 4 in. flexible connection where ductwork connects to motor-driven equipment. Do not bulge or install on a bind.

F. Install sheet metal escutcheon around ducts passing through walls exposed.

G. Install extractors at all rectangular supply branches.

H. Install combination scoop extractors/butterfly dampers at all round supply branches to diffusers.
   1. **Option:** Install 45 deg. or 90 deg. side take-off at all round supply branches.

I. Install turning vanes at all changes of direction in rectangular ducts.
   1. **Option:** Use standard radius turns, with centerline radius a minimum 1-1/2 times duct dimension.

J. Install all dampers and provide blank-off plates to seal frames airtight.

K. Ensure damper quadrant operator is exposed after insulating ductwork. Tape around operator to maintain vapor barrier.

L. Return Ductwork: Make all connections to registers or grilles with proper transitions. Refer to details on the Drawings. Abrupt connections or contractions, such as rectangular to round in the direction of air flow, or

large to small duct, are prohibited. All duct transitions shall be smooth and symmetrical, with a maximum 15 deg. pitch to each side of the transition.

M. Make final connections to diffusers in suspended ceilings with insulated flexible duct (5 ft. long maximum).

N. Any risers or drops shall be made with 3-piece or 5-piece elbows per SMACNA.

O. For duct insulation, refer to Section 23 07 00.

P. Duct Sealing:
   1. Apply sealer to all joints according to SMACNA Standards.
   2. Seal ducts to the seal classes listed below. Comply with SMACNA's "HVAC Duct Construction Standards — Metal & Flexible."
      a. Outdoor:
         1) Supply-air ducts: Seal Class A.
         2) Return-air ducts: Seal Class C.
      b. Conditioned space:
         1) Supply-air ducts in pressure classes 2 in. WG and lower: Seal Class C.
         2) Supply-air ducts in pressure classes higher than 2 in. WG: Seal Class B.
         3) Return-air ducts: Seal Class C.

Q. Duct Access Doors:
   1. Install in accessible, usable locations.
   2. Install in return air ducts at 20 ft. intervals and at the base of each riser in all kitchens, laundries, and manufacturing facilities.
   3. Install on each side of duct-mounted coils, and at each motorized damper. (When located in diffuser neck, damper shall be accessible by removing diffuser.)
   4. Provide ceiling or wall access panels where necessary.
   5. Comply with requirements of Section 23 37 00.

R. Paint flat black the inside of all ductwork behind grilles and registers that will be exposed to view in occupied areas.

## 3.02 LEAKAGE TESTING

A. Pressurize ductwork to 110% of design working pressure. Air leakage shall be uniformly distributed and shall not exceed 0.5% of the design total cubic feet per minute in any main or branch. The Architect shall witness test. Schedule a minimum of (48) hours in advance.

B. Comply with SMACNA's "HVAC Air Duct Leakage Test Manual." Submit a test report for each test.

C. Test ducts with a pressure class higher than 3 in. WG: Test representative duct sections, selected by the Architect from sections installed, totaling no less than 25% of total installed duct area for each designated pressure class.

END OF SECTION 23 31 13

# SECTION 23 33 00

# AIR DUCT ACCESSORIES

## PART 1 GENERAL

### 1.01 RELATED DOCUMENTS

A. Section 23 07 00, “HVAC Insulation.”

B. Section 23 31 13, “Metal Ducts (Low-Velocity).”

### 1.02 DESCRIPTION

A. Provide flexible ductwork.

### 1.03 QUALITY ASSURANCE

A. Standards:
   1. National Fire Protection Association (NFPA): 2006 NFPA 255, “Standard Method of Test of Surface Burning Characteristics of Building Materials.”
   2. Underwriters Laboratories, Inc. (UL) 723 and 181.
   3. American Society of Heating, Refrigerating, and Air Conditioning Engineers (ASHRAE):
      a. ASHRAE 62.1-2007, Section 5, “Systems and Equipment.”
      b. ASHRAE/IESNA 90.1-2007, including tables “Minimum Duct Insulation R-Values, Cooling and Heating Only Supply Ducts and Return Ducts” and “Minimum Duct Insulation R-Values, Combined Heating and Cooling Supply Ducts and Return Ducts.”
   4. Illuminating Engineering Society of North America (IESNA).

### 1.04 RATINGS AND CAPACITY

A. Size, capacity, arrangements, and location as indicated on the Drawings.

### 1.05 PERFORMANCE REQUIREMENTS

A. Airstream Surfaces: Surfaces in contact with the airstream shall comply with requirements in ASHRAE 62.1-2007.

## PART 2 PRODUCTS

### 2.01 FLEXIBLE DUCTWORK

A. Contractor-fabricated insulated round rigid sheet metal ductwork for branch runouts with insulated flexible duct connections to diffusers (maximum 5 ft. long flexible duct). UL 181, Class I, shall not exceed 25 Flame Spread and 50 Smoke Developed.

B. **Option** for insulated rigid round ductwork: Flexmaster Type TL-M. UL 181, Class I, shall not exceed 25 Flame Spread and 50 Smoke Developed. Pre-

insulated, semi-rigid, triple-lock, aluminum, flexible, round ductwork for branch runouts and connections to diffusers. 6 in. pressure rating.

C. Round Flexible (permitted for concealed ductwork only): Flexmaster Type 8M. UL 181, Class I, shall not exceed 25 Flame Spread and 50 Smoke Developed. Contractor-fabricated insulated round rigid sheet metal ductwork for branch runouts with pre-insulated CPE fabric supported by helical wound galvanized steel flexible round duct connections to diffusers (maximum 5 ft. long flexible duct).

1. **Option:** Flexmaster Type TL-V. Pre-insulated semi-rigid triple lock aluminum flexible round ductwork for branch runouts and connections to diffusers. 6 in. pressure rating.

D. Insulated, Flexible Duct: UL 181, Class 1, black polymer film supported by helically wound, spring-steel wire; fibrous-glass insulation; aluminized vapor-barrier film.

E. Insulated, Flexible Duct: UL 181, Class 1, multiple layers of aluminum laminate supported by helically wound, spring-steel wire; fibrous-glass insulation; aluminized vapor-barrier film.

F. Insulation R-Value: Comply with ASHRAE/IESNA 90.1-2007.

## 2.02 DUCT ACCESS DOORS

A. Refer to Section 23 31 13.

# PART 3 EXECUTION

## 3.01 INSTALLATION — FLEXIBLE DUCTWORK

A. Install flexible ducting only for terminations in 5 ft. maximum lengths, and with only (1) 90 deg. bend at a radius of (2) duct diameters.

END OF SECTION 23 33 00

# SECTION 23 33 13

# DAMPERS

## PART 1 GENERAL

### 1.01 RELATED DOCUMENTS

A. Section 23 09 23, “Direct-Digital Control System for HVAC.”

B. Section 23 09 93, “Sequence of Operations for HVAC Controls.”

C. Section 26 09 00, “Instrumentation and Control for Electric Systems.”

### 1.02 DESCRIPTION

A. Provide all fixed dampers for adjusting air flow.

B. Install motor-operable control dampers furnished with the rooftop units, if not factory-mounted.

### 1.03 QUALITY ASSURANCE

A. Standards:
   1. Air Movement and Control Association (AMCA) Standard 500 Certified Performance.
   2. National Fire Protection Association (NFPA): 2009 NFPA 90A, “Standard for the Installation of Air-Conditioning and Ventilating Systems.”
   3. Sheet Metal and Air Conditioning Contractors National Association (SMACNA) Publication, “Low Pressure Duct Construction Standards.”
   4. Underwriters Laboratories, Inc. (UL) Fire Resistance Directory.

## PART 2 PRODUCTS

### 2.01 DAMPERS — BALANCING (VOLUME)

A. Ruskin. Galvanized steel, steel blades, molded synthetic bearings, locking quadrant with stand-off bracket.
   1. Rectangular for ducts larger than 12 in.: Type MD35.
   2. Rectangular for ducts 12 in. and smaller: Type MD25, single-blade.
   3. Round: Type MDRS25, single-blade.
   4. Face and bypass: Type CD35/OBC/FB.

B. Other Acceptable Manufacturers: Approved equal by American Warming and Ventilating, Air Balance, Arrow, National Controlled Air, Inc., Cesco, Flexmaster, Honeywell, Johnson Controls, Louvers and Dampers, Tamco, Vent Products, Airstream, or Greenheck.

### 2.02 DAMPERS — SPLITTER (FABRICATED)

A. Steel frame and adjustable diverting blades, angle bracket, pivot bearing assembly, worm gear operator.

B. Acceptable Manufacturers: Ruskin or approved equal by American Warming and Ventilating, Air Balance, Arrow, National Controlled Air, Inc., Cesco, Flexmaster, Honeywell, Johnson Controls, Louvers and Dampers, Tamco, Vent Products, or Airstream.

## 2.03 DAMPERS — MOTOR OPERATORS

A. Temperature Controls Subcontractor shall provide electric 120 volt AC or electric 24 volt AC operators, as specified under Section 23 09 23. Provide all linkage.

B. Acceptable Manufacturers: Belimo or approved equal by Trane, Johnson Controls, Honeywell, Siebe Controls, or Siemens Building Technologies.

## 2.04 CONICAL TAKE-OFF (FOR ROUND BRANCH DUCTS)

A. Combination Conical Take-Off with Butterfly Damper: Flexmaster Model FLDE. Spin collar 45 deg. scoop, with butterfly damper with adjustable operator.

1. **Option:** Flexmaster Model CBDE. Conical Bellmouth fitting, with butterfly damper with adjustable operator.

B. Other Acceptable Manufacturers: Approved equal by American Warming and Ventilating, Air Balance, Arrow, National Controlled Air, Inc., Cesco, Ruskin, Honeywell, Johnson Controls, Louvers and Dampers, Tamco, Vent Products, or Airstream.

## 2.05 EXTRACTORS (FOR RECTANGULAR BRANCH DUCTS)

A. Tuttle and Bailey “Vectrols.” Steel frame and parallel diverting blades, angle bracket, pivot bearing assembly, worm gear operator, and control shaft.

B. Other Acceptable Manufacturer: Approved equal by Titus.

# PART 3 EXECUTION

## 3.01 INSTALLATION

A. Install dampers in ductwork. Provide duct transitions as required to match duct size to damper dimensions. Install dampers and operators in locations where they can be readily inspected, serviced, adjusted, and maintained.

B. Provide mounting angles and duct sleeves. Bolt, screw, or tack weld damper enclosure to sleeve.

C. Provide access panels on **BOTH** sides of ductwork for access to dampers.

D. General Trades Contractor shall provide ceiling access panels where necessary for access to dampers.

E. Ensure balancing damper quadrant operator is exposed after insulating ductwork. Tape insulation around operator to maintain vapor barrier.

F. Provide access to adjustments as required. Provide stops or adjust the linkage as required to fix and maintain the balance position.

G. Provide a solid place for installation of motor operators. Coordinate the selection and installation of motor operators furnished by the Temperature Controls Subcontractor. Mount operators furnished under Section 23 09 23.

## 3.02 CONTROLS CONNECTION

A. Temperature Controls Subcontractor shall provide operators and operator linkage.

B. Temperature Controls Subcontractor shall connect to damper linkage.

C. Temperature Controls Subcontractor shall provide controls.

D. Temperature Controls Subcontractor shall assume full responsibility for the proper operation of motor-operated dampers to provide the required sequence of operation described in Section 23 09 93.05.

## 3.03 WIRING

A. Electrical Contractor shall provide power and control wiring. Refer to Section 26 09 00.

B. Electrical Contractor shall provide disconnect switches and 120 volt power for motor operators.

END OF SECTION 23 33 13

# SECTION 23 36 00

# AIR TERMINAL UNITS

## PART 1 GENERAL

### 1.01 RELATED DOCUMENTS

A. Section 23 09 23, “Direct-Digital Control System for HVAC.”

### 1.02 DESCRIPTION

A. Provide packaged, factory-wired, fully tested, low velocity, variable air volume (VAV) terminal boxes, complete with direct digital temperature control operators and volume control devices.
   1. Provide cooling-only boxes as scheduled.
   2. Temperature Controls Subcontractor shall field-mount the VAV terminal controller (VTC). Refer to Section 23 09 23.

### 1.03 QUALITY ASSURANCE

A. Standards:
   1. Air Diffusion Council (ADC).
   2. National Electrical Manufacturers Association (NEMA).
   3. National Fire Protection Association (NFPA): 2009 NFPA 90A, “Standard for the Installation of Air-Conditioning and Ventilating Systems.”
   4. Underwriters Laboratories, Inc. (UL), including UL 181.
   5. American Society of Heating, Refrigerating, and Air Conditioning Engineers (ASHRAE):
      a. ASHRAE 52.2.
      b. ASHRAE 62.1-2007, Section 5, “Systems and Equipment.”

### 1.04 RATINGS AND CAPACITY

A. Size, capacity, arrangements, and location as indicated on the Drawings.

B. Sound ratings shall be evaluated using the following criteria:
   1. Radiated sound in a “medium” room at 5 ft. from source.
   2. 1.0 in. inlet static pressure to the terminal box.

### 1.05 PERFORMANCE REQUIREMENTS

A. Airstream Surfaces: Surfaces in contact with the airstream shall comply with requirements in ASHRAE 62.1-2007.

## PART 2 PRODUCTS

### 2.01 VAV BOXES

A. 22 ga. minimum, corrosion-protected steel plenum box with 1 in. thick, 1.5 lb. density, acoustical thermal lining, with inlet air pressure

collector/amplifier, heavy-duty damper, discharge duct connection, and bottom access panel. Normally open valves.

B. VAV Device: 16 ga. cylindrical flow control device connected to shaft with nylon bushings, external adjustment with gasketed stop so air quantity can be field-adjusted. Shall maintain air volume within 5% over inlet static pressure range from minimum to 6 in. water gauge. Extruded aluminum damper blade, rust-proof Delrin self-lubricating bearings, seated against gasketed stops with less than 2% leakage at 3 in. pressure as rated by ADC Standards.

C. Air Flow Sensor: Multi-point, averaging ring or cross type sensor designed to maintain flow and limit maximum CFM regardless of inlet flow deflection. Flexible duct inlet at 90 deg., 0 deg., or any inlet angle to the control device shall not alter the maximum factory setting by more than 10%.

D. Damper Operator: Temperature Controls Subcontractor shall field-mount operator. The operator and its controller shall be calibrated and set at the maximum air flow rates scheduled on the Drawings, but external balancing taps shall be provided for field calibration or readjustment. The controller shall operate the damper through the full CFM range.

I. Controls:
   1. Direct digital controls: Fixed control throttling range with field-adjustable minimum and maximum CFM setpoints. Provide calibration charts.
   2. Electric controls: Solid-state, pressure-independent. Potentiometer adjustment on printed circuit board of minimum and maximum settings of damper position.
   3. Miscellaneous controls: 24 volt control transformer.
   4. Room thermostat: Model VWTC. Thermistor type, variable voltage output, concealed setpoint indication and adjustment, Fahrenheit scale, and blank plastic cover. Temperature Controls Subcontractor shall furnish.

J. Temperature Controls Subcontractor shall supply a line to low voltage transformer of sufficient capacity to power the VTC associated with the VAV terminal and actuator assemblies. Temperature Controls Subcontractor shall provide all wiring between the room temperature or $CO_2$ sensor and the VTC.

K. Acceptable Manufacturer: Price.

## PART 3 EXECUTION

### 3.01 INSTALLATION

A. Support all equipment independent of ceiling systems. Coordinate with the Ceiling Contractor. Provide support steel as necessary.

B. Provide access as required for maintenance and repair. All boxes located above the ceiling shall be end discharge, unless otherwise noted. All boxes shall deliver the air quantities shown on the Drawings at acceptable sound levels.

C. Make flexible duct connections at box inlet.

D. Coordinate balancing requirements with the Engineer and the Air Balance Subcontractor. Provide calibration charts. Ensure that minimum and maximum CFMs are properly set.

## 3.02 WIRING

A. Coordinate installation of controls with the Temperature Controls Subcontractor. Temperature Controls Subcontractor shall provide all 24 volt A.C. control power transformers, and control wiring.

END OF SECTION 23 36 00

# SECTION 23 37 00

# AIR OUTLETS AND INLETS

## PART 1 GENERAL

### 1.01 RELATED DOCUMENTS

A. Section 23 33 13, “Dampers.”

### 1.02 DESCRIPTION

A. Provide grilles, registers, and diffusers as indicated on the Drawings. Service shall be for supply or return as noted on the Drawings.

### 1.03 QUALITY ASSURANCE

A. Standard: Air Diffusion Council (ADC).

### 1.04 RATINGS AND CAPACITY

A. Size, capacity, arrangements, and location as indicated on the Drawings.

## PART 2 PRODUCTS

### 2.01 GRILLES, REGISTERS, AND DIFFUSERS

A. Factory-fabricated to evenly distribute design CFM throughout the space without causing noticeable drafts. Steel or aluminum, with white, baked enamel finish.

B. Grilles: Same construction as registers without volume-control damper.

C. Return Grilles or Registers: Curved blades that have a minimum deflection of 45 deg. will be accepted. Straight blades are permitted, where specifically scheduled.

D. Acceptable Manufacturers: Titus or approved equal by Price.

### 2.02 LINEAR DEVICES

A. Plenum Slot Diffusers: Titus Type TBD1-10. Heavy-gauge steel, white finish, concealed fasteners, removable cores, opposed blade dampers, concealed keyways.

B. Other Acceptable Manufacturers: Approved equal by Krueger, Price, Metal-Aire, Nailor, or Tuttle & Bailey.

### 2.03 DAMPERS

A. Diffuser Damper: Titus Type AG-75, or Anemostat Type CU-1, with 90 deg. sectorizing baffles. Opposed blade, heavy-gauge, steel control.

B. Louver Damper: Titus Type AG-85, or Anemostat Type LD. Steel louver blades, flat black finish.

C. Other Approved Manufacturers: Approved equal by Anemostat, Krueger, Price, Metal-Aire, Nailor, or Tuttle & Bailey.

## PART 3 EXECUTION

### 3.01 INSTALLATION — DIFFUSERS, REGISTERS, AND GRILLES

A. Install diffusers on rectangular ducts with a damper at the tap into the rectangular duct. Diffusers supplied by flexible ducts shall be fitted with a louver damper installed in the diffuser neck. This is in addition to the duct balancing dampers shown.

B. Do not install combination diffuser/damper on bottom connection to a continuing supply air main duct.

C. Registers shall be provided with sponge-rubber gasket between flanges and wall or ceiling.

D. In drywall ceilings, cut the holes in the ceiling specifically to fit the diffusers/registers.

E. Install ceiling return/relief grille/register blades away from normal line of sight into the ceiling space or duct.

F. Install wall supply registers at least 6 in. below the ceiling, unless otherwise indicated.

G. To prevent ceiling from sagging, provide additional support hangers for diffusers, grilles, or registers mounted in lay-in ceiling tiles.

H. Ensure airtight seal at all connections.

END OF SECTION 23 37 00

# SECTION 23 74 00

# PACKAGED OUTDOOR HVAC EQUIPMENT

# (RTU-1)

## PART 1 GENERAL

### 1.01 RELATED DOCUMENTS

A. Section 23 05 29, “Hangers and Supports for HVAC Piping and Equipment.”

B. Section 23 05 60, “Requirements for Completion of HVAC Work.”

C. Section 23 09 23, “Direct-Digital Control System for HVAC.”

D. Section 23 09 93, “Sequence of Operations for HVAC Controls.”

E. Section 23 31 00, “HVAC Ducts and Casings (Hangers and Supports).”

F. Section 23 31 13, “Metal Ducts (Low-Velocity).”

G. Section 26 29 23, “Variable-Frequency Motor Controllers.”

### 1.02 DESCRIPTION

A. Provide a 100% outdoor air packaged, factory-piped, factory-wired, direct expansion (DX) cooling only, energy recovery section, rooftop unit (RTU), filled with refrigerant and oil charge, and complete with factory curb and pre-wired controls.

### 1.03 QUALITY ASSURANCE

A. Standards:
1. Air-Conditioning, Heating, and Refrigeration Institute (AHRI), including AHRI Standard 210 and AHRI Standard 1060, “Rating Air-to-Air Heat Exchangers for Energy Recovery Ventilation Equipment.”
2. American Society for Testing & Materials (ASTM).
3. American Society of Heating, Refrigerating, and Air Conditioning Engineers (ASHRAE), including Standard 84, “Method of Testing Air-to-Air Heat Exchangers.”
4. Intertek Testing Services (ETL, cETLus).
5. National Electrical Manufacturers Association (NEMA).
6. National Fire Protection Association (NFPA): 2011 NFPA 70, “National Electrical Code® (NEC).”
7. Underwriters Laboratories, Inc. (UL).

### 1.04 RATINGS AND CAPACITY

A. Size, capacity, arrangements, and location as indicated on the Drawings.

B. Motors: Unless otherwise noted, high-efficiency motors shall be NEMA Design B, continuous rated with 1.15 service factor, with Class F insulation and Class B temperature rise, copper windings and leads, 1,750 RPM with

the horsepower indicated on the Drawings. All motors shall be equipped with ball bearings.

## 1.05 WARRANTY

A. Provide 1-year standard Manufacturer's warranty on entire unit.

B. Provide 5-year warranty on compressor, including 4-year extended parts-only coverage.

# PART 2 PRODUCTS

## 2.01 GENERAL DESCRIPTION

A. Furnish as shown on plans, Daikin McQuay Rebel single-zone heating and cooling unit(s) Model DPS. Unit performance and electrical characteristics shall be in accordance with the job schedule.

B. Configuration: Fabricate as detailed on prints and drawings:
   1. Return plenum / economizer section.
   2. Filter section.
   3. Cooling coil section.
   4. Supply fan section.
   5. Condensing unit section.

C. The complete unit shall be cETLus-listed.

D. Each unit shall be specifically designed for outdoor rooftop application and include a weatherproof cabinet. Each unit shall be completely factory assembled and shipped in one piece. Packaged units shall be shipped fully charged with R-410 Refrigerant and oil.

E. The unit shall undergo a complete factory run test prior to shipment. The factory test shall include a refrigeration circuit run test, a unit control system operations checkout, a unit refrigerant leak test, and a final unit inspection.

F. All units shall have decals and tags to indicate caution areas and aid unit service. Unit nameplates shall be fixed to the main control panel door. Electrical wiring diagrams shall be attached to the control panels. Installation, operating and maintenance bulletins, and start-up forms shall be supplied with each unit.

G. Performance: All scheduled energy efficiency ratio (EER), integrated energy efficiency ratio (IEER), capacities and face areas are minimum accepted values. All scheduled amps, kilowatts, and horsepowers are maximum accepted values that allow scheduled capacity to be met.

H. Warranty: The Manufacturer shall provide 12-month parts-only warranty. Defective parts shall be repaired or replaced during the warranty period at no charge. The warranty period shall commence at startup or (6) months after shipment, whichever occurs first.

I. Acceptable Manufacturers: Daikin McQuay or approved equal by Johnson-York.

## 2.02 CABINET, CASING, AND FRAME

A. Panel construction shall be double-wall construction for all panels. All floor panels shall have a solid galvanized steel inner liner on the air stream side of the unit to protect insulation during service and maintenance. Insulation shall be a minimum of 1 in. thick with an R-value of 7.0, and shall be 2-part injected foam. Panel design shall include no exposed insulation edges. Unit cabinet shall be designed to operate at total static pressures up to 5.0 in. w.g.

B. Exterior surfaces shall be constructed of pre-painted galvanized steel for aesthetics and long term durability. Paint finish to include a base primer with a high-quality, polyester resin topcoat of a neutral beige color. Finished panel surfaces to withstand a minimum 750-hour salt spray test in accordance with ASTM B117 standard for salt spray resistance.

C. Service doors shall be provided on the fan section, filter section, control panel section, and heating vestibule in order to provide user access to unit components. All service access doors shall be mounted on multiple, stainless steel hinges and shall be secured by a latch system. Removable service panels secured by multiple mechanical fasteners are not acceptable.

D. The unit base shall overhang the roof curb for positive water runoff and shall seat on the roof curb gasket to provide a positive, weathertight seal. Lifting brackets shall be provided on the unit base to accept cable or chain hooks for rigging the equipment.

## 2.03 ECONOMIZER SECTION

A. Unit shall be provided with an outdoor air economizer section. The economizer section shall include outdoor, return, and exhaust air dampers. The economizer operation shall be fully integral to the mechanical cooling and allow up to 100% of mechanical cooling if needed to maintain the cooling discharge air temperature (DAT).

1. The outdoor air hood shall be factory installed and constructed from galvanized steel finished with the same durable paint finish as the main unit. The hood shall include moisture eliminator filters to drain water away from the entering air stream.
2. The outside and return air dampers shall be sized to handle 100% of the supply air volume. The dampers shall be parallel blade design. Damper blades shall be gasketed with side seals to provide an air leakage rate of 4 cfm/sq. ft. of damper area at 1 in. differential pressure in accordance with ASHRAE 90.1 Energy Standard.
3. A barometric exhaust damper shall be provided to exhaust air out of the back of the unit. A bird screen shall be provided to prevent infiltration of rain and foreign materials. Exhaust damper blades shall be lined with vinyl gasketing on contact edges.

4. Control of the dampers shall be by a factory-installed direct-coupled actuator. Damper actuator shall be of the modulating, spring-return type.
5. A comparative enthalpy control shall be provided to sense and compare enthalpy in both the outdoor and return air streams to determine if outdoor air is suitable for “free” cooling. If outdoor air is suitable for “free” cooling, the outdoor air dampers shall modulate in response to the unit’s temperature control system.

B. Provide factory-installed, factory-tested, outdoor air monitor that controls outdoor air ±15% accuracy down to 40 cfm/ton.

## 2.04 ENERGY RECOVERY

A. RTU shall be provided with an AHRI-certified rotary wheel air-to-air heat exchanger in a cassette frame complete with seals, drive motor, and drive belt. The energy recovery wheel (ERW) shall be an integral part of the RTU with unitary construction and shall not require field assembly. Bolt-on energy recovery units that require field assembly and section-to-section gasketing and sealing are not acceptable.

B. The wheel capacity, air pressure drop, and effectiveness shall be AHRI-certified in accordance with AHRI Standard 1060. Thermal performance shall be certified by the Manufacturer in accordance with ASHRAE Standard 84 and AHRI Standard 1060.

C. RTU shall be designed with a track so the entire ERW cassette can slide out from the RTU to facilitate cleaning.

D. The unit shall have 2 in. MERV 7 filters for the outdoor air before the wheel to help keep the wheel clean and reduce maintenance. Filter access shall be by a hinged access door with 1/4-turn latches.

E. The matrix design shall have channels to reduce cross-contamination between the outdoor air and the exhaust air. The layers shall be effectively captured in aluminum and stainless steel segment frames that provide a rigid and self-supporting matrix. All diameter and perimeter seals shall be provided as part of the cassette assembly and shall be factory-set. Drive belt(s) of stretch urethane shall be provided for wheel rim drive without the need for external tensioners or adjustment.

F. The total ERW shall be coated with silica gel desiccant permanently bonded without the use of binders or adhesives, which may degrade desiccant performance. The substrate shall be lightweight polymer and shall not degrade nor require additional coatings for application in marine or coastal environments. Coated segments shall be washable with detergent or alkaline coil cleaner and water. Desiccant shall not dissolve nor deliquesce in the presence of water or high humidity.

G. Wheels shall be provided with removable energy transfer matrix. Wheel frame construction shall be a welded hub, spoke, and rim assembly of stainless, plated and/or coated steel and shall be self-supporting without

matrix segments in place. Segments shall be removable without the use of tools to facilitate maintenance and cleaning.

H. Wheel bearings shall be selected to provide an L-10 life in excess of 400,000 hours. Rim shall be continuous rolled stainless steel. Wheels shall be connected to the shaft by means of taper lock hubs.

I. The exhaust air fan shall be a direct-drive single-width, single-inlet (SWSI) plenum fan. The exhaust fan shall be sized for the airflow requirements per the construction schedule. The unit controller shall control the exhaust fan to maintain building pressure. A variable frequency drive (VFD) shall be provided for the exhaust fan motor or the exhaust fan motor shall be an electronically commutated motor (ECM). RTU shall have single-point electrical power connection and shall be ETL-listed.

J. The control of the ERW shall be an integral part of the RTU's direct-digital control (DDC) controller. The DDC controller shall have visibility of the outdoor air temperature, leaving wheel temperature, return air temperature, and exhaust air temperature. These temperatures shall be displayed at the RTU's DDC controller liquid crystal display (LCD). All of these temperatures shall be made available through the BACnet interface.

K. RTU with the ERW shall incorporate the economizer operation. The ERW shall have a bypass damper. When the unit is in the economizer mode of operation, the ERW shall stop and the bypass dampers shall be opened. The outdoor air shall be drawn through the bypass dampers to reduce the pressure drop of the outdoor airstream.

L. RTU DDC controller shall provide frost control for the ERW. When a frost condition is encountered, the unit controller shall stop the wheel. When in the frost control mode, the wheel shall be jogged periodically and shall not be allowed to stay in the stationary position.

## 2.05 SUPPLY FAN

A. Supply fan shall be a SWSI airfoil centrifugal fan. The fan wheel shall be Class II construction with aluminum fan blades that are continuously welded to the hub plate and end rim. The supply fan shall be a direct-drive fan mounted to the motor shaft.

B. Fan assembly shall be a slide-out assembly for servicing and maintenance.

C. All fan assemblies shall be statically and dynamically balanced at the factory, including a final trim balance, prior to shipment.

D. The fan motor shall be a totally enclosed ECM that is speed controlled by the RTU controller. The motor shall include thermal overload protection to protect the motor in the case of excessive motor temperatures. The motor shall have phase-failure protection to prevent the motor from operation in the event of a loss of phase. Motors shall be premium efficiency.

E. The supply fan shall be capable of airflow modulation from 30% to 100% of the scheduled designed airflow. The fan shall not operate in a state of surge at any point within the modulation range.

## 2.06 EXHAUST FAN

A. Exhaust fan shall be a SWSI airfoil centrifugal fan. The fan wheel shall be Class II construction with aluminum fan blades that are continuously welded to the hub plate and end rim. The exhaust fan shall be a direct-drive fan mounted to the motor shaft.

B. The fan motor shall be a totally enclosed ECM that is speed-controlled by the RTU controller. The motor shall include thermal overload protection to protect the motor in the case of excessive motor temperatures. The motor shall have phase-failure protection to prevent the motor from operation in the event of a loss of phase. Motors shall be premium efficiency.

C. Fan assembly shall be a slide-out assembly for servicing and maintenance.

D. The unit DDC controller shall provide building static pressure control. The unit controller shall provide proportional control of the exhaust fans from 25% to 100% of the supply air fan designed airflow to maintain the adjustable building pressure setpoint. Temperature Controls Subcontractor shall mount the required sensing tubing from the building to the factory-mounted building static pressure sensor.

## 2.07 VARIABLE AIR VOLUME CONTROL

A. The unit controller shall proportionally control the ECMs on the supply and exhaust fans. The supply fan shall be controlled to maintain an adjustable duct-pressure setpoint. A duct static pressure sensor shall be factory mounted in the control panel. Temperature Controls Subcontractor shall provide the wiring for the duct static pressure sensor and the building pressure sensor. Temperature Controls Subcontractor shall provide the outdoor air pressure sensor.

B. The unit controller shall proportional control the ECM motors on the supply fan based on space temperature. The unit controller shall increase/decrease the speed of the supply fan in order to maintain the space temperature within its setpoint and deadband. The unit controller shall provide DAT control with the compressor modulation.

## 2.08 FILTERS

A. Unit shall be provided with a draw-through filter section. The filter rack shall be designed to accept a 2 in. prefilter and a 4 in. final filter. The unit design shall have a hinged access door for the filter section. The Manufacturer shall ship the RTU with 2 in. construction filters. Contractor shall provide, at building occupancy, the final set of filters in accordance with the Contract Documents.

## 2.09 COOLING COIL

A. The indoor coil section shall be installed in a draw-through configuration, upstream of the supply air fan. The coil section shall be complete with a factory-piped cooling coil and an ASHRAE 62.1-compliant double-sloped drain pan.

B. DX cooling coils shall be fabricated of seamless high-efficiency copper tubing that is mechanically expanded into high-efficiency aluminum plate fins. Coils shall be a multi-row, staggered tube design with a minimum of (3) rows. All cooling coils shall have an interlaced coil circuiting that keeps the full coil face active at all load conditions. All coils shall be factory-leak-tested with high-pressure air under water.

C. The cooling coil shall have an electronic controlled expansion valve. The unit controller shall control the expansion valve to maintain liquid subcooling and the superheat of the refrigerant system.

D. The refrigerant suction lines shall be fully insulated from the expansion valve to the compressors.

E. The drain pan shall be stainless steel and positively sloped. The slope of the drain pan shall be in (2) directions and comply with ASHRAE Standard 62.1. The drain pan shall have a minimum slope of 1/8 in./ft. to provide positive draining. The drain pan shall extend beyond the leaving side of the coil. The drain pan shall have a threaded drain connection extending through the unit base.

## 2.10 HOT GAS REHEAT

A. Unit shall be equipped with a fully modulating hot gas reheat coil with hot gas coming from the unit condenser

B. Hot gas reheat coil shall be a Micro Channel design. The aluminum tube shall be a micro-channel design with high-efficiency aluminum fins. Fins shall be brazed to the tubing for a direct bond. The capacity of the reheat coil shall allow for a 20 deg. F. temperature rise at all operating conditions.

C. The modulating hot gas reheat systems shall allow for independent control of the cooling coil leaving air temperature and the reheat coil leaving air temperature. The cooling coil and reheat coil leaving air temperature setpoints shall be adjustable through the unit controller. During the dehumidification cycle, the unit shall be capable of 100% of the cooling capacity. The hot gas reheat coil shall provide discharge temperature control within ±2 deg. F.

D. Each coil shall be factory-leak-tested with high-pressure air under water.

## 2.11 HEATING SECTION

A. A hot water heating coil shall be factory-installed in the heat section. The hot water heat section shall be installed downstream of the supply air fan. A factory-tested diffuser shall be used in order to provide air distribution

across the coil. RTU shall include a piping vestibule. The coil connection shall terminate in the vestibule. All coil connections shall be copper; steel connections shall not be allowed in order to prevent dielectrics and corrosion.

B. Coils shall be fabricated of seamless 3/8 in. diameter copper tubing that is mechanically expanded into high-efficiency rippled and corrugated aluminum plate fins. All coil vents and drains shall be factory installed. Hot water coil shall be fully cased to allow for easy replacement.

C. The coil shall have freeze protection and shall be controlled by the unit DDC controller. With the detection of a freeze condition, the heating coil valve shall be driven fully open. The unit controller shall indicate an alarm.

D. Coil shall be factory-leak-tested with high-pressure air under water.

## 2.12 CONDENSING SECTION

A. Outdoor coils shall be cast aluminum, micro-channel coils. Plate fins shall be protected and brazed between adjoining flat tubes such that they shall not extend outside the tubes. A sub-cooling coil shall be an integral part of the main outdoor air coil. Each outdoor air coil shall be factory-leak-tested with high-pressure air under water.

B. Fan motors shall be an ECM for proportional control. The unit controller shall proportionally control the speed of the condenser fan motors to maintain the head pressure of the refrigerant circuit from ambient condition of 0 deg. F. to 125 deg. F. Mechanical cooling shall be provided to 25 deg. F. The motor shall include thermal overload protection and protect the motor in the case of excessive motor temperatures. The motor shall have phase-failure protection and prevent the motor from operation in the event of a loss of phase.

C. The condenser fan shall be low-noise blade design. Fan blade design shall be a dynamic profile for low-tip speed. Fan blade shall be of a composite material.

D. The unit shall have scroll compressors. One of the compressors shall be an inverter compressor providing proportional control. The unit controller shall control the speed of the compressor to maintain the DAT.

E. Pressure transducers shall be provided for the suction pressure and head pressure. Temperature sensor shall be provided for the suction temperature and the refrigerant discharge temperature of the compressors. All of the above devices shall be an input to the unit controller and the values shall be displayed at the unit controller.

F. Refrigerant circuit shall have a bypass valve between the suction and discharge refrigerant lines for low-head-pressure compressor starting and increased compressor reliability. When there is a call for mechanical cooling, the bypass valve shall open to equalizing the suction and discharge

pressures. When pressures are equalized, the bypass valve shall close and the compressor shall be allowed to start.

G. Each circuit shall be dehydrated and factory-charged with R-410A refrigerant and oil.

## 2.13 ELECTRICAL

A. Unit wiring shall comply with 2011 NEC requirements and with all applicable UL standards. All electrical components shall be UL-recognized where applicable. All wiring and electrical components provided with the unit shall be number-coded, color-coded, and labeled according to the electrical diagram provided for easy identification. The unit shall be provided with a factory-wired weatherproof control panel. Unit shall have a single-point power terminal block for main power connection. A terminal board shall be provided for low-voltage control wiring. Branch short-circuit protection, 115-volt control circuit transformer and fuse, system switches, and a high-temperature sensor shall also be provided with the unit. Each compressor and condenser fan motor shall be furnished with contactors and inherent thermal overload protection. Supply fan motors shall have contactors and external overload protection. Knockouts shall be provided in the bottom of the main control panels for field-wiring entrance.

B. A single non-fused disconnect switch shall be provided for disconnecting electrical power at the unit. Disconnect switches shall be mounted internally to the control panel and operated by an externally mounted handle.

## 2.14 CONTROLS

A. Provide a complete integrated microprocessor-based DDC system to control all unit functions including temperature control, scheduling, monitoring, unit safety protection (including compressor minimum run and minimum off times), and diagnostics. This system shall consist of all required temperature sensors, pressure sensors, controller and keypad/display operator interface. All motor controller boards and sensors shall be factory-mounted, factory-wired, and factory-tested.

B. The stand-alone DDC controllers shall not be dependent on communications with any on-site or remote PC or master control panel for proper unit operation. The microprocessor shall maintain existing setpoints and operate stand-alone if the unit loses either direct connect or network communications. The microprocessor memory shall be protected from voltage fluctuations as well as from any extended power failures. All factory and user set schedules and control points shall be maintained in nonvolatile memory. No settings shall be lost, even during extended power shutdowns.

C. The DDC system shall permit starting and stopping of the unit locally or remotely. The control system shall be capable of providing a remote alarm indication. The unit control system shall provide for outside air damper actuation, emergency shutdown, remote heat enable/disable, remote cool enable/disable, heat indication, cool indication, and fan operation.

D. All digital inputs and outputs shall be protected against damage from transients or incorrect voltages. All field wiring shall be terminated at a separate, clearly marked terminal strip.

E. The DDC controller shall have a built-in time schedule. The schedule shall be programmable from the unit keypad interface. The schedule shall be maintained in nonvolatile memory to ensure that it is not lost during a power failure. There shall be (1) start/stop per day and a separate holiday schedule. The controller shall accept up to (16) holidays, each with up to a 5-day duration. Each unit shall also have the ability to accept a time schedule via BAS network communications.

F. The keypad interface shall allow convenient navigation and access to all control functions. The unit keypad/display character format shall be 4 lines x 20 characters. All control settings shall be password-protected against unauthorized changes. For ease of service, the display format shall be English language readout. Coded formats with look-up tables will not be accepted. The user interaction with the display shall provide the following information as a minimum:
   1. Return air temperature.
   2. DAT.
   3. Outdoor air temperature.
   4. Space air temperature.
   5. Outdoor enthalpy, high/low.
   6. Compressor suction temperature and pressure.
   7. Compressor head pressure and temperature.
   8. Expansion valve position.
   9. Condenser fan speed.
   10. Inverter compressor speed.
   11. Dirty filter indication.
   12. Airflow verification.
   13. Cooling status.
   14. Control temperature (changeover).
   15. VAV box output status.
   16. Cooling status/capacity.
   17. Unit status.
   18. All time schedules.
   19. Active alarms with time and date.
   20. Previous alarms with time and date.
   21. Optimal start.
   22. Supply fan and exhaust fan speed.
   23. System operating hours:
      a. Fan.
      b. Exhaust fan.
      c. Cooling.
      d. Individual compressor.
      e. Heating.
      f. Economizer.

g. Tenant override.

G. The user interaction with the keypad shall provide the following:
1. Controls mode:
   a. Off manual.
   b. Auto.
   c. Heat/Cool.
   d. Cool only.
   e. Heat only.
   f. Fan only.
2. Occupancy mode:
   a. Auto.
   b. Occupied.
   c. Unoccupied.
   d. Tenant override.
3. Unit operation changeover control:
   a. Return air temperature.
   b. Space temperature.
   c. Network signal.
4. Cooling and heating change-over temperature with deadband.
5. Cooling DAT.
6. Supply reset options:
   a. Return air temperature.
   b. Outdoor air temperature.
   c. Space temperature.
   d. Airflow (VAV).
   e. Network signal.
   f. External (0-10 vdc).
   g. External (0-20 mA).
7. Temperature alarm limits:
   a. High supply air temperature.
   b. Low supply air temperature.
   c. High return air temperature.
8. Lockout control for compressors.
9. Compressor interstage timers.
10. Night setback and setup space temperature.
11. Building static pressure.
12. Economizer changeover:
    a. Enthalpy.
    b. Drybulb temperature.
13. Current time and date.
14. Tenant override time.
15. Occupied/unoccupied time schedule.
16. One event schedule.
17. Holiday dates and duration.
18. Adjustable set points.

19. Service mode:
    a. Timers normal (all time delays normal).
    b. Timers fast (all time delays 20 seconds).

H. If the unit is to be programmed with a night setback or setup function, an optional space sensor shall be provided. Space sensors shall be available to support field-selectable features. Sensor options shall include:
1. Zone sensor with tenant override switch.
2. Zone sensor with tenant override switch plus heating and cooling set point adjustment. (Space Comfort Control systems only.)

I. To increase the efficiency of the cooling system, the DDC controller shall include a DAT reset program for part load operating conditions. DAT shall be controlled between a minimum and a maximum DAT based on one of the following inputs:
1. Airflow.
2. Outside air temperature.
3. Space temperature.
4. Return air temperature.
5. External signal of 1-5 vdc.
6. External signal of 0-20 mA.
7. Network signal.

## 2.15 ROOF CURB

A. A prefabricated, heavy-gauge galvanized steel, mounting curb shall be provided for field assembly on the roof decking prior to unit shipment. The roof curb shall be a full perimeter type with complete perimeter support of the air-handling section and condensing section. The curb shall be a minimum of 12 in. high and include a nominal 2 in. x 4 in. wood nailing strip. Gasket shall be provided for field-mounting between the unit base and roof curb.

B. Furnish field-installed insulation kit.

C. Refer to Section 23 31 00.

# PART 3 EXECUTION

## 3.01 INSTALLATION

A. Roof Curbs: Furnished with unit.

B. Coordinate carefully, such that roof openings for supply and return ducts are same size as ducts.

C. General Trades Contractor shall cut and frame roof openings for supply and return ducts.

D. Install additional 12 in. of acoustical insulation inside roof curb for sound attenuation.

E. Install trapped condensate drain line from drain pan to splash block on roof. Provide splash block.

F. Unit Manufacturer shall provide selection of sheaves to the HVAC Contractor for proper balancing.

G. Check and tighten bearings after (48) hours operation.

H. Drive belts shall be properly tensioned using a Browning belt tensioner, and aligned by workmen qualified in this Work. Tension at start-up and re-tension after (1) week of operation.

I. Controls: Refer to Section 23 09 23 and Section 23 09 93.

J. Install a new set of filters in unit at Contract Completion. Furnish a second set of filters for unit to the Owner / Construction Manager at Contract Completion. Refer to Section 23 05 60.

## 3.02 EQUIPMENT ACCESS

A. Locate unit to provide sufficient access to change filters, pull coils, or service other items requiring periodic maintenance.

## 3.03 WIRING

A. Electrical Contractor shall provide power wiring.

END OF SECTION 23 74 00

# SECTION 23 81 43

# AIR-SOURCE UNITARY HEAT PUMPS

## PART 1 GENERAL

### 1.01 DESCRIPTION

A. Provide a variable capacity, heat recovery air conditioning system, including indoor and outdoor units, and controls.

B. Each system by a specific Manufacturer is an engineered system, unique to the Manufacturer's equipment, pipe sizing, and installation procedures. The basis of design is Daikin AC. Systems by other Manufacturers will not be accepted.

### 1.02 QUALITY ASSURANCE

A. Standards:
   1. National Fire Protection Association (NFPA): 2011 NFPA 70, "National Electrical Code® (NEC).
   2. International Standard Organization (ISO).
   3. Electrical Laboratories (ETL).

### 1.03 RATINGS AND CAPACITY

A. Size, capacity, arrangements, and location as indicated on the Drawings.

B. Operating Range:
   1. The operating range in cooling will be 23 deg. F. dry bulb to approximately 110 deg. F. dry bulb.
   2. The operating range in heating will be 0 deg. F. dry bulb to 64 deg. F. dry bulb, and -4 deg. F. wet bulb to 60 deg. F. wet bulb.
   3. Simultaneous cooling/heating operating range will be 22 deg. F. wet bulb to approximately 60 deg. F. wet bulb.

C. Manufacturer shall submit certification that the tested system energy efficiency ratio (EER) and coefficient of performance (COP) values reflect "full load" efficiencies, and are the results from testing to the "Alternate Test Method" (ATM) guidelines provided by the U.S. Department of Energy (DOE) in the Federal Register / Vol. 74, No. 66 / Wednesday, April 8, 2009 / Notices / Pages 15955–15958. All tested values shall attain or surpass the current minimum efficiency levels regulated in the DOE Code of Federal Regulations 10 CFR Chapter 11, Section 431.97.

### 1.04 ACCEPTABLE MANUFACTURER

A. Daikin AC.

## 1.05 WARRANTY

A. The System Manufacturer shall include the following warranties from date of installation:
   1. 1-year Manufacturer's warranty for units.
   2. 1-year limited labor warranty for units.
   3. 6-year warranty for compressors.

# PART 2 PRODUCTS

## 2.01 VARIABLE CAPACITY, HEAT RECOVERY AIR CONDITIONING SYSTEM

A. The variable capacity, heat recovery air conditioning system shall be a Variable Refrigerant Volume Series (heat and cool model) split system as specified. Each system shall consist of multiple indoor fan-coil evaporators, branch selector boxes, joints and headers, a 3-pipe refrigeration distribution system using PID control, and an outdoor air-to-air heat pump unit.

B. The system will be produced in an ISO 9001 and ISO 14001 facility. The system shall be factory-tested for safety and function.

C. The units shall be ETL-listed and bear the ETL label.

D. The outdoor unit is a direct expansion (DX), air-cooled heat recovery, multi-zone air-conditioning system with variable speed driven compressors using R-410A refrigerant. The outdoor unit may connect an indoor evaporator capacity up to 100% of the outdoor condensing unit capacity. All zones are each capable of operating separately with individual temperature control.

E. The outdoor unit shall be interconnected to the indoor units, which may range in capacity from 7,500 Btu/h to 48,000 Btu/h in accordance with the Manufacturer detailing of each available indoor unit.

F. The indoor units shall be connected to the outdoor unit utilizing Manufacturer's specified piping joints and headers.

G. Operation of the system shall permit either individual cooling or heating of each fan coil simultaneously or all of the fan coil units associated with one branch cool/heat selector box. Each fan coil or group of fan coils shall be able to provide set temperature independently via a local remote controller, an Intelligent Controller, an Intelligent Manager, or a BMS interface.

H. Branch selector (BS) boxes shall be located as shown on the Drawings. BS boxes shall have the capacity to control up to 60 MBH (cooling) downstream of the BS box. BS box shall consist of (5) electronic expansion valves, refrigerant control piping, and electronics to facilitate communications between the BS box and main processor, and between the BS box and fan coils. BS box shall control the operational mode of the subordinate fan coils. The use of (5) electronic expansion valves ensures continuous heating during defrost, no heating impact during changeover, and reduced sound levels.

## 2.02 REFRIGERANT PIPING

A. The system shall be capable of refrigerant piping up to 540 actual feet or 620 equivalent feet from the outdoor unit to the furthest indoor unit, a total combined liquid line length of 3,280 ft. of piping between the outdoor unit and all indoor fan coil units, with 295 ft. maximum vertical difference, without any oil traps.

## 2.03 OUTDOOR UNIT

A. The outdoor unit will be factory charged with R-410A.

B. The outdoor unit shall perform as indicated below. Performance conditions:
   1. Cooling: Indoor temperature of 80 deg. F. dry bulb, 67 deg. F. wet bulb, and outdoor temperature of 95 deg. F. dry bulb.
   2. Heating: Indoor temperature of 70 deg. F. dry bulb and outdoor temperature of 47 deg. F. dry bulb, 43 deg. F. wet bulb.
   3. Equivalent piping length: 25 ft.

C. The outdoor unit shall be factory-assembled and pre-wired with all necessary electronic and refrigerant controls. The refrigeration circuit of the condensing unit shall consist of scroll compressors, motors, fans, condenser coil, electronic expansion valves, solenoid valves, 4-way valve, distribution headers, capillaries, filters, shut-off valves, oil separators, service ports and refrigerant regulator. High/low pressure gas line, liquid and suction lines shall be individually insulated between the outdoor and indoor units.

D. The connection ratio of indoor units to outdoor unit shall be permitted up to 100% of the outdoor condensing unit capacity.

E. Each outdoor system shall be able to support the connection of up to (41) indoor units dependant on the model of the outdoor unit, and the capacities of the indoor units.

F. The system will automatically restart operation after a power failure and will not cause any settings to be lost, thus eliminating the need for reprogramming.

G. The unit shall incorporate an auto-charging feature and a refrigerant charge check function.

H. The outdoor unit shall be modular in design and should allow for side-by-side installation with minimum spacing.

I. The following safety devices shall be included on the condensing unit:
   1. High-pressure switch.
   2. Control circuit fuses.
   3. Crankcase heaters.
   4. Fusible plug.
   5. High-pressure switch.
   6. Overload relay.
   7. Inverter overload protector.

8. Thermal protectors for compressor and fan motors.
9. Over-current protection for the inverter.
10. Anti-recycling timers.

J. To ensure the liquid refrigerant does not flash when supplying to the various fan coil units, the circuit shall be provided with a sub-cooling feature.

K. Oil recovery cycle shall be automatic, occurring (2) hours after start of operation, and then every (8) hours of operation.

L. The outdoor unit shall be capable of heating operation at 0 deg. F. dry bulb ambient temperature without additional low ambient controls.

M. The system shall continue to provide heat to the indoor units in heating operation while in the defrost mode.

N. Unit Cabinet: The outdoor unit shall be completely weatherproof and corrosion-resistant. The unit shall be constructed from rust-proofed mild steel panels coated with a baked enamel finish.

O. Fan:
1. The condensing unit shall consist of one or more propeller type, direct-drive, 350 watt and 750 watt fan motors that have multiple speed operation via a digitally commutating (DC) inverter.
2. The condensing unit fan motor shall have multiple speed operation of the DC inverter type, shall be of high external static pressure, and shall be factory-set as standard at 0.12 in. WG. A field setting switch to a maximum 0.32 in. WG pressure is available to accommodate field-applied duct for indoor mounting of condensing units.
3. The fan shall be a vertical discharge configuration with a nominal airflow maximum range of 6,700 CFM to 14,120 CFM, dependent on the model specified.
4. The fan motor shall have inherent protection and permanently lubricated bearings, and shall be mounted.
5. The fan motor shall be provided with a fan guard to prevent contact with moving parts.

P. Condenser Coil:
1. The condenser coil shall be manufactured from copper tubes expanded into aluminum fins to form a mechanical bond.
2. The heat exchanger coil shall be of a waffle louver fin and rifled bore tube design to ensure high efficiency performance.
3. The fins are to be covered with an anti-corrosion acrylic resin and hydrophilic film type E1.
4. The pipe plates shall be treated with powdered polyester resin for corrosion prevention.

Q. Compressor:
1. The inverter scroll compressors shall be variable speed controlled, which is capable of changing the speed to follow the variations in total cooling and heating load as determined by the suction gas pressure as

measured in the condensing unit. In addition, samplings of evaporator and condenser temperatures shall be made so that the high/low pressures detected are read every 20 seconds and calculated. With each reading, the compressor capacity (INV frequency or STD ON/OFF) shall be controlled to eliminate deviation from target value.

2. The inverter-driven compressor in each condensing unit shall be of highly efficient reluctance DC, hermetically sealed scroll “G-type” with a maximum speed of 6,480 RPM.
3. Neodymium magnets shall be adopted in the rotor construction to yield a higher torque and efficiency in the compressor instead of the normal ferrite magnet type. At complete stop of the compressor, the neodymium magnets will position the rotor into the optimum position for a low torque start.
4. The capacity control range shall be as low as 6% to a high of 100%.
5. Each non-inverter compressor shall also be of the hermetically sealed scroll type.
6. Each compressor shall be equipped with a crankcase heater, high-pressure safety switch, and internal thermal overload protector.
7. Oil separators shall be standard with the equipment together with an intelligent oil management system.
8. The compressor shall be spring-mounted to avoid the transmission of vibration.
9. Units sized 8 tons to 12 tons shall contain a minimum of (2) compressors.
10. Units sized 14 tons to 16 tons shall contain a minimum of (3) compressors.
11. Units sized 18 tons to 20 tons shall contain a minimum of (4) compressors.
12. In the event of compressor failure, the remaining compressors shall continue to operate and provide heating or cooling as required at a proportionally reduced capacity. The microprocessor and associated controls shall be designed to specifically address this condition.

R. Electrical:
1. The control voltage between the indoor and outdoor unit shall be 16VDC non-shielded, stranded 2-conductor cable.
2. The control wiring shall be a 2-wire multiplex transmission system, making it possible to connect multiple indoor units to (1) outdoor unit with (1) 2-cable wire, thus simplifying the wiring operation.

## 2.04 BRANCH SELECTOR BOX

A. Selector boxes shall be factory-assembled, factory-wired, and factory-piped.

B. Branch controllers shall be run-tested at the factory.

C. Selector boxes shall be mounted indoors.

D. When simultaneously heating and cooling, the units in heating mode shall energize their sub-cooling solenoid valve.

E. Unit Cabinet:
   1. Units shall have a galvanized steel plate casing.
   2. Each cabinet shall house multiple refrigeration control valves and a liquid gas separator.
   3. The cabinet shall contain a tube-in-tube heat exchanger.
   4. The unit shall have sound-absorption thermal insulation material made of flame-resistant and heat-resistant foamed polyethylene.

F. Refrigerant Valves:
   1. The unit shall be furnished with (5) electronic expansion valves to control the direction of refrigerant flow.
   2. The refrigerant connections shall be of the braze type.
   3. Each circuit shall have at least (1) branch selector box.

G. Drainage: The unit shall not require any condensate drainage connection.

H. Electrical:
   1. The minimum circuit amps (MCA) shall be 0.1. The maximum fuse amps (MFA) shall be 15.
   2. The control voltage between the indoor and outdoor unit shall be 16VDC non-shielded 2-conductor cable.

## 2.05 INDOOR UNIT — VERTICAL, FLOOR-MOUNTED UNIT

A. The indoor unit model shall be a vertical, floor-mounted fan coil unit, operable with R-410A refrigerant, equipped with an electronic expansion valve. It shall be available from 24,000 Btu/h to 48,000 Btu/h. Computerized PID control shall be used to maintain room temperature within 1 deg. F.

B. The indoor unit shall be completely factory-assembled and factory-tested. Included in the unit is factory wiring, piping, electronic proportional expansion valve, control circuit board, fan motor thermal protector, flare connections, condensate drain pan, self-diagnostics, auto-restart function, 3-minute fused time delay, and test run switch.

C. Indoor unit and refrigerant pipes will be charged with dehydrated air prior to shipment from the factory.

D. Both refrigerant lines shall be insulated from the outdoor unit.

E. The indoor units shall be equipped with a condensate pan.

F. The indoor units shall be equipped with a return air thermistor.

G. Unit Cabinet:
   1. The cabinet shall be space-saving and shall be located in mechanical equipment closets.
   2. The cabinet shall be constructed with sound-absorbing foamed polystyrene and polyethylene insulation.
   3. Optional high-efficiency air filters are available for each model unit.

H. Fan:
   1. The fan shall be direct-drive turbo fan type with statically and dynamically balanced impeller with high and low fan speeds available.
   2. The air flow rate shall be available in high and low settings.
   3. The fan motor shall be thermally protected.

I. Filter: The return air shall be filtered by means of a washable long-life filter with mildew-proof resin.

J. Coil:
   1. Coils shall be of the direct expansion type constructed from copper tubes expanded into aluminum fins to form a mechanical bond.
   2. The coil shall be a 2-row cross-fin copper evaporator coil with 17 FPI design completely factory-tested.
   3. The refrigerant connections shall be flare connections
   4. The condensate pipe connection will be 1-1/4 in. outside diameter PVC.
   5. A condensate pan shall be located under the coil.
   6. A thermistor will be located on the liquid and gas line.

K. Electrical:
   1. Transmission (control) wiring between the indoor and outdoor unit shall be a maximum of 3,280 ft. (total 6,560 ft.).
   2. Transmission (control) wiring between the indoor and remote controller shall be a maximum distance of 1,640 ft.

L. Control:
   1. The unit shall have controls provided by the Manufacturer necessary to operate the system.
   2. The unit shall be compatible with interfacing with connection to BacNet networks or interfacing with connection to BMS system.

M. Accessories:
   1. High-efficiency air filter, MERV 8 efficiency.
   2. Air filter rack.
   3. Supply and return air duct connections.
   4. Remote “in-room” sensor kit.
   5. Return air box.

## 2.06 CONTROLS

A. System shall be equipped with integrated direct digital controls system that communicates amongst all units. System shall be capable of self-troubleshooting and self-commissioning. HVAC Contractor shall provide all wiring. Wiring shall be concealed with piping. Wiring shall not run exposed under any circumstance. Provide BacNet interface panel to talk to BAS.

B. System shall tie into the existing Daikin central control module in the respective schools.

## PART 3 EXECUTION

### 3.01 DELIVERY, STORAGE AND HANDLING

A. Unit shall be stored and handled according to the Manufacturer's recommendations.

### 3.02 INSTALLATION

A. Mount outdoor unit on roof equipment rails as shown on the Drawings. Refer to Section 23 05 29.

B. Install trapped and insulated condensate drain from each indoor drain pan to floor drain.

C. Install refrigerant piping and refrigerant between indoor units, branch selector boxes, and outdoor units.

D. Install a set of filters in each unit for use during construction. Install a new set of filters in each unit at Contract Completion. Furnish a third set of filters for each unit to the Construction Manager at Contract Completion. Refer to Section 23 05 60.

E. Drive belts shall be properly tensioned using a Browning belt tensioner, and aligned by workmen qualified in this Work. Tension at start-up and re-tension after (1) week of operation.

F. Mount vertical units on return air box.

### 3.03 EQUIPMENT ACCESS

A. Locate all units to provide sufficient access to change filters, pull coils, or service other items requiring periodic maintenance.

### 3.04 WIRING

A. All wiring shall comply with 2011 NEC.

B. Electrical Contractor shall provide disconnect switches and power wiring for the heat pump unit(s), branch selector boxes, and indoor fan coil units.

END OF SECTION 23 81 43

# SECTION 23 82 39.13

# CABINET UNIT HEATERS

## PART 1 GENERAL

### 1.01 RELATED DOCUMENTS

A. Section 23 05 60, “Requirements for Completion of HVAC Work.”

B. Section 23 09 23, “Direct-Digital Control System for HVAC.”

### 1.02 DESCRIPTION

A. Provide hot water cabinet unit heaters where shown on the Drawings.

### 1.03 QUALITY ASSURANCE

A. Standards:
   1. National Electrical Manufacturers Association (NEMA).
   2. Underwriters Laboratories, Inc., (UL) Label.
   3. American Society for Testing & Materials (ASTM).
   4. National Fire Protection Association (NFPA):
      a. 2009 NFPA 90A, “Standard for the Installation of Air-Conditioning and Ventilating Systems.”
      b. 2009 NFPA 90B, “Standard for the Installation of Warm Air Heating and Air-Conditioning Systems.”
   5. American Society of Heating, Refrigerating, and Air Conditioning Engineers (ASHRAE).
      a. Applicable requirements in ASHRAE 62.1-2007:
         1) Section 5, “Systems and Equipment.”
         2) Section 7, “Construction and System Start-Up.”
      b. Applicable requirements in ASHRAE/IESNA 90.1-2007, Section 6, “Heating, Ventilating, and Air-Conditioning.”
   6. Illuminating Engineering Society of North America (IESNA).

### 1.04 RATINGS, CHARACTERISTICS, PERFORMANCE REQUIREMENTS, AND CAPACITY

A. Size, capacity, arrangements, and location as indicated on the Drawings.

B. Motors: Unless otherwise noted, high-efficiency motors shall be NEMA Design B, continuous rated with 1.15 service factor, with Class F insulation and Class B temperature rise, copper windings and leads, 1,750 RPM with the horsepower indicated on the Drawings. All motors shall be equipped with ball bearings.

C. Airstream Surfaces: Surfaces in contact with the airstream shall comply with requirements in ASHRAE 62.1-2007.

## PART 2 PRODUCTS

### 2.01 CABINET UNIT HEATERS

A. Cabinet: Steel with baked-enamel finish with Manufacturer's standard paint, in color selected by the Architect].

B. Coil Section Insulation: ASTM C 1071; surfaces exposed to airstream shall be erosion-resistant coating to prevent erosion of glass fibers.

C. Coil Section Insulation: Comply with NFPA 90A or NFPA 90B. Unicellular polyethylene thermal plastic, preformed sheet insulation complying with ASTM C 534, Type II, except for density.

### 2.02 HOT WATER CABINET UNIT HEATERS

A. Concealed Horizontal Unit: Galvanized steel, wraparound chasis with full back plate and flanged edges for rigidity, fan board, control cabinet, insulation backing on area covering entire coil section, filter rails, ducted outlet, and easily removable bottom access panel secured with bolts. (Not hinged.) Phosphatized/bonderized, primed, baked enamel finish.

B. Hot Water Coils: Single-row serpentine design, 5/8 in. outside diameter seamless copper tubing with mechanically bonded aluminum fins, 300 PSIG maximum working pressure.

C. Fans: Forward-curved, double-width centrifugal wheels, non-corrosive, molded, fiberglass-reinforced thermo-plastic material on all units except electric heat models that use aluminum, formed sheet metal fan housings, galvanized steel fan scrolls, shaft-mounted to permanent split capacitor enclosed motor with built-in thermal overload protection, extended bearing oilers.

D. Motors: All motors shall have integral thermal overload protection, with motor cords quickly detachable at junction box by locking prong connector.

E. Filters: Removable 1 in. woven glass filters standard.

F. Controls: Unit-mounted HIGH/MEDIUM/LOW/OFF switch.
   1. Wall-mounted thermostat, specified in Section 23 09 23.

G. Acceptable Manufacturer: Rittling.

## PART 3 EXECUTION

### 3.01 INSTALLATION

A. Secure unit to building wall.

B. Level cabinet in the horizontal and vertical planes.

C. Make final duct and piping connections for both supply and return air.

D. Install wall thermostat.

E. Install a set of filters in each unit for use during construction. Install a new set of filters in each unit at Contract Completion. Furnish a third set of filters for each unit to the Construction Manager at Contract Completion. Refer to Section 23 05 60.

## 3.02 EQUIPMENT ACCESS

A. Locate all units to provide sufficient access to change filters, pull coils, or service other items requiring periodic maintenance.

## 3.03 WIRING

A. Electrical Contractor shall install thermostat, and shall provide disconnect switch and power and control wiring, as indicated on the Drawings.

END OF SECTION 23 82 39.13

# DIVISION 26

# ELECTRICAL INDEX

## 26 00 00 ELECTRICAL


| | |
|---|---|
| Common Work Results for Electrical | 26 05 00–1 thru 20 |
| Electrical Demolition and Renovation | 26 05 01–1 thru 4 |
| Electrical Submittals | 26 05 06–1 thru 4 |
| Electrical Operating and Maintenance Manuals | 26 05 07–1, 2 |
| Temporary Lighting and Power | 26 05 08–1, 2 |
| Equipment Hook-Up and Final Connection | 26 05 11–1 |
| Electrical Sleeves | 26 05 15–1 thru 4 |
| Low-Voltage Electrical Power Conductors and Cables | 26 05 19–1 thru 4 |
| Grounding and Bonding for Electrical Systems | 26 05 26–1, 2 |
| Hangers and Supports for Electrical Systems | 26 05 29–1 thru 3 |
| Raceway and Boxes for Electrical Systems | 26 05 33–1 thru 5 |
| Identification for Electrical Systems | 26 05 53–1 |
| Requirements for Completion of Electrical Work | 26 05 60–1 thru 3 |
| Testing, Adjusting, and Balancing for Electrical | 26 05 93–1, 2 |
| Commissioning of Electrical | 26 08 00-1 thru 5 |
| Instrumentation and Control for Electrical Systems | 26 09 00–1 |
| Lighting Control Devices | 26 09 23–1, 2 |


## 26 20 00 LOW-VOLTAGE ELECTRICAL TRANSMISSION


| | |
|---|---|
| Wiring Devices | 26 27 26–1, 2 |
| Low-Voltage Circuit Protective Devices | 26 28 00–1, 2 |
| Enclosed Controllers | 26 29 13–1 thru 3 |
| Variable-Frequency Motor Controllers | 26 29 23-1 thru 6 |


***NOTE: This Section is part of the HVAC Contract Work***

## 26 50 00 LIGHTING


| | |
|---|---|
| Lighting | 26 50 00–1 thru 3 |
| Classroom Lighting | 26 55 51–1 thru 6 |

# SECTION 26 05 00

# COMMON WORK RESULTS FOR ELECTRICAL

## PART 1 GENERAL

### 1.01 PREFACE

A. Electrical Contractor is responsible for the Work described in Division 26, "Electrical," Sections 26 00 00 through 26 99 99 (as included), unless otherwise noted.

B. Electrical Contractor is also responsible for the Work described in the following Sections:
   1. Division 23, "HVAC," Section 23 08 00, "Commissioning of HVAC."
   2. Division 27, "Communications": Sections 27 00 00 through 27 99 99 (as included), unless otherwise noted.
   3. Division 28, "Electronic Safety and Security": Sections 28 00 00 through 28 99 99 (as included), unless otherwise noted.

C. **Terminology:** In the Sections listed above, the term "Contractor" shall mean the Electrical Contractor performing Work on this Project, unless otherwise noted.

### 1.02 RELATED DOCUMENTS

A. Refer to the following additional Divisions and Sections for specific requirements, responsibilities, and methods relating to Division 26 Work:
   1. Division 00, "Procurement and Contracting Requirements": All sections.
   2. Division 01, "General Requirements": All sections.
   3. Division 07, "Thermal and Moisture Protection," Section 07 92 00, "Joint Sealants."
   4. Division 08, "Openings," Section 08 31 13, "Access Doors and Frames."
   5. Division 09, "Finishes":
      a. Section 09 50 00, "Ceilings."
      b. Section 09 91 00, "Painting."

### 1.03 DESCRIPTION

A. The provisions listed in this Section shall supersede any conflicting statements contained elsewhere in the Specifications. Contractor is responsible for the more restrictive requirement between these general provisions and other requirements contained elsewhere in the Specifications.

B. Furnish material, labor, tools, accessories, and equipment to complete and leave ready for operation all electrical systems of this Project as described in these Specifications and as shown on the Drawings.

C. It is the intent that the Electrical Work be complete in every respect. Install Work in compliance with the Latest Enforced Edition of all applicable Codes, Regulations, and Standards, unless otherwise noted. Obtain all permits, licenses, and certifications required by the Code Authority having Jurisdiction.

D. Only a Contractor and craftsmen licensed by the State as required shall install this Electrical Work.

E. Use sufficient journeymen electricians and competent supervisors in execution of this portion of the Work to ensure proper and adequate installation throughout. In the acceptance or rejection of installed electrical system, no allowance will be made for lack of skill on the part of workers.

F. Shop drawings for the installation of an electrical system shall be submitted and reviewed by the Architect before any electrical work is installed, enlarged, or extended. Under **NO** circumstances shall any Work be performed prior to receiving shop drawings reviewed by the Architect.

G. Coordinate location of all work with other Contractors and equipment.

H. Work includes, but is not limited to, the following:
   1. Alternates.
   2. Demolition work.
   3. Lighting controls.
      a. Classroom lighting system.
      b. Occupancy/motion sensors.
   4. Low-voltage electrical transmission:
      a. Panelboard circuit breakers.
      b. Wiring devices.
   5. Lighting systems.
   6. Communications systems (refer to Division 27):
      a. Telephone conduit system.
      b. Telephone/data conduit system.
      c. Computer data conduit system.
      d. Television conduit system.
   7. Electronic safety and security systems (refer to Division 28):
      a. Security conduit system.
      b. Fire alarm system.

I. Work Not Included:
   1. The Owner shall provide the following work directly or through another Contractor:
      a. Telephones, jacks, cover plates, and wiring.
      b. Computers, modems, jacks, connectors, cover plates, and cabling.
      c. Television receivers, amplifiers, splitters, taps, connectors, cover plates, and coaxial cable.
      d. Security system equipment and wiring.

2. HVAC Contractor shall provide the following work: Furnish variable speed drives.

J. The electrical system shall not be considered complete and acceptable unless, and until, all Code and Governing Agency requirements are satisfied.

K. Refer to Division 01 and Section 26 05 60, “Requirements for Completion of Electrical Work,” for additional requirements.

## 1.04 STANDARDS OF QUALITY

A. Contractor shall provide Work of the highest quality, conforming to the accepted practices and standards of the Trades involved

B. Further definition of quality is given by reference to various Laws, Codes, Standards, and Regulations.

C. All work on this Project shall conform to applicable National, State, and Local Building Codes and any local laws, ordinances, regulations, and requirements pertaining to this work. Code references, when made, shall be based upon the currently enforced Edition.

D. Any Law, Code, Standard, or Regulation referred to in other Sections of Division 26 is included in its entirety as a part of these Specifications.

E. Give notice and comply with all Laws, Ordinances, Rules, Regulations, and lawful orders of the Code Authority having Jurisdiction bearing on the performance of the Electrical Work.

F. The following Codes apply to this Work:
   1. State of Ohio: Ohio Administrative Code (OAC):
      a. OAC 1301:7-7: 2011 Ohio Fire Code.
      b. OAC 4101:1: 2011 Ohio Building Code.
   2. National:
      a. National Fire Protection Association (NFPA), Current Edition. Codes as listed in subsequent Specification Sections, including 2011 NFPA 70, “National Electrical Code® (NEC).”
      b. Americans with Disabilities Act (ADA) (36 CFR 1191).

G. Licensed Contractors shall perform Work as required by State Codes.

H. Only licensed and certified Fire Alarm Installers shall perform fire alarm Work.

I. Methods and materials shall be certified where noted in the individual Specification Sections.

J. All equipment and appliances installed on this Project shall bear the label of an Approved Testing Agency, and shall be installed in accordance with the Manufacturer’s instructions for the labeled equipment and appliances.

K. All electrical equipment, fixtures, devices, and wiring shall be listed by Underwriters Laboratories, Inc.

L. All structural steel used on this Project shall be manufactured in the United States, per Ohio Revised Code 153.011.

M. Work shall comply with County Health Department requirements.

## 1.05 CONTRACT DRAWINGS

A. Drawings are schematic and show approximate locations, general arrangement, and extent of Work.

B. Verify exact locations in the field, and coordinate with all other Contractors.

C. The Architect shall approve, in writing, significant deviations from the Drawings.

D. The Architect reserves the right to make minor changes in location that do not require additional labor or material, up to the time of roughing-in, without additional cost. The Architect reserves the right to determine what is “significant” and what is “minor.”

E. If a conflict occurs between the Drawings and Specifications, immediately submit a written request for an interpretation or clarification from the Architect, who shall determine which interpretation has precedence.

F. Should overlap of work among the Trades become evident, immediately submit a written request for an interpretation or clarification from the Architect, who shall determine which interpretation has precedence. In such event, none of the Contractors shall assume that it is relieved of the Work that is specified under its branch unless instructions are received, in writing, from the Architect.

## 1.06 EXAMINATION OF SITE

A. Certain existing conditions may affect the manner or sequence of the performance of the Work. Existing services, structures, and operating schedules may need to be reviewed, prior to bidding, to facilitate the installation of the Work without disrupting the normal operation of the facility.

B. Before submitting its Bid, the Contractor should visit the site of the proposed Project. After receipt of Bids, no allowances will be made for lack of knowledge of Project conditions.

C. Verify and reconcile Work required by the Contract Documents with existing conditions at the Site.

D. Should the Contractor note any discrepancies during the Bidding Period, it shall notify the Architect immediately, in writing, to permit issuance of an Addendum to prevent misunderstandings at a later date.

## 1.07 APPLICABLE CODES, LICENSES, PERMITS, FEES, AND NOTICES

A. The Construction Manager will submit all Contract Drawings and Specifications to the City of Whitehall Building Department, pay for the Plan Examination fee, and obtain Plan Approval.

B. Submit Fire Alarm drawings, battery calculations of existing fire alarm system, and equipment cut sheets for approval to the following office(s):
   1. State of Ohio, Department of Commerce, Division of Industrial Compliance, Division of State Fire Marshal.
   2. City of Whitehall Fire Department.
   3. Other Code Authority having Jurisdiction.

C. Contractor shall secure and pay for any **ADDITIONAL** permits, governmental fees, bonds, licenses, and inspections required for the proper execution and completion of the Electrical Work.

D. Pay for all other fees and other charges related to Electrical Work and payable to Utility Companies or Code Enforcement Agencies.

E. It may be necessary to fully complete several portions of Work in one area, before other areas are started.

F. Arrange and pay for all inspections required to obtain a Certificate of Beneficial Occupancy. Contractor shall include this cost in its bid.

G. If the Contractor observes that any of the Contract Documents are at variance therewith in any respect, it shall promptly notify the Architect in writing, and any necessary changes will be arranged by the Architect.

H. If the Contractor performs any Work knowing it to be contrary to such Laws, Ordinances, Rules, and Regulations, and fails to give prior notice to the Architect, the Contractor shall assume full responsibility for, and shall bear all costs associated with, correcting the Work.

## 1.08 CONTRACTOR'S RESPONSIBILITY

A. Provide a Superintendent, on site, whose duties include the directing and supervising of work. Inform the Architect of the Superintendent's name and phone number, and the method of contact when the Superintendent is not at the site.

B. As soon as possible after the Award of the Contract and the approval of Shop Drawings, the Contractor shall place orders for materials and equipment required for its Work. Immediately inform the Architect in writing as to any materials and equipment that cannot be obtained within the required time period, either due to conditions of the market or other governing factors.

C. Inspect each item of materials or equipment immediately prior to installation. Reject damaged and defective items.

D. Contractor shall determine erection procedures and sequence the construction to keep its work on schedule and to ensure the safety of the building and its occupants. This includes supplying whatever temporary bracing, guys, or tie-downs might be required. Such materials shall remain the Contractor's property after completion of the Project.

E. Provide attachment and connection devices and methods for securing work. Secure all work true to line and level and within recognized industry tolerances. Allow for expansion and building movement.

F. Recheck measurements and dimensions of the Work as an integral step of starting each installation.

G. Where mounting heights are not indicated, individual units generally can be mounted at industry-recognized standard mounting heights for the particular application indicated. However, the Architect must approve all mounting heights.

H. Coordinate the enclosure or concealment of the Work with the required inspections and tests so as to minimize the necessity of uncovering work for that purpose.

## 1.09 COORDINATION OF WORK

A. Contractor shall coordinate its Work carefully with all other Contractors.

B. Contractor shall read the entire Specification covering other branches of the Work. It will be held responsible for the coordination of its work with the work performed by other Trades.

C. Coordinate locations of all Electrical Work with sprinklers, piping, hangers, ductwork, diffusers, grilles, registers, and other equipment, and with ceilings, soffits, structural members, joists, metal decks, bracing, etc.

D. Consult all Contract Drawings that may affect the location of any equipment, devices, lighting fixtures, panels, and wiring and conduit, and make any other adjustments in location as necessary to secure coordination.

E. Contractor shall be responsible for the cost of additional engineering work required for changes to the work as shown or described, due to the relocation of items requested by the Contractor.

F. Do not install work without first coordinating the layout, routing, etc., with other Contractors whose work may be affected.

G. Review all equipment nameplate ratings and advise the Architect immediately of any system design changes required to wire the equipment properly.

## 1.10 UTILITIES AND OUTAGES

A. Locate and touch all existing utilities prior to construction.

B. Where necessary, make minor relocations to permit installation of the Electrical Work.

C. Advise the Architect immediately of major conflicts to permit modification of the Contract Documents prior to bidding.

D. Closely coordinate any utility service shutdowns or outages, interruptions, or downtime with the Architect and Construction Manager.

E. Avoid inconveniencing the Owner.

F. Provide temporary service during the curtailment, if required by the Architect.

G. Notify the Construction Manager at least (2) working days in advance of commencing work in the area of existing utilities.

H. Contractor shall alert occupants of nearby premises of any emergency conditions that arise as a result of its work in connection with existing utilities.

I. If any electrical outage exceeds (4) hours, provide a portable generator sufficient in size and capacity to power the entire building for the duration of the outage.

J. Record the location of all concealed utilities on the Record Drawings.

## 1.11 PROJECT RECORD DOCUMENTS

A. Contractor shall maintain, at the job site, (1) copy of the following items related to its Trade:
   1. Contract Drawings.
   2. Specifications.
   3. Addenda.
   4. Reviewed Shop Drawings.
   5. Change Orders.
   6. Other modifications to Contract.
   7. Field Test Records.
   8. Minutes of Coordination and Progress Meetings.
   9. (1) set of the Contract Drawings that will be used for Record (as-built) Drawings. This set shall be used exclusively for documenting and recording the exact location of all installed Work.

B. Do not use record documents for construction purposes.

C. Store record documents in temporary field office, apart from documents used for construction.

D. Provide files and racks for storage of record documents.

E. Maintain record documents in clean, dry, legible condition.

F. Use red ballpoint pen for all marking of record documents.

G. Make record documents available at all times for inspection by the Architect and Construction Manager.

H. Record Drawings:
   1. Record Drawings shall be legibly marked to record actual construction with the following information:
      a. Location of internal utilities and appurtenances concealed in construction referenced to visible and accessible features of structure.

b. Field changes of dimension and detail.
c. Changes made by Field Work Order or Change Order.
d. Details not on the original Contract Drawings.

2. Do not permanently conceal any work until the required information has been recorded.
3. Record deviations in locations of concealed conduit and wiring, equipment, and all buried or concealed utility lines and services, etc., dimensioned from a fixed control point, including depth of bury, and as required for further reference.
4. Minor conduit and wiring variations need not be recorded.
5. Record locations of abandoned conduit and wiring, including exterior lines.
6. Record deviations made necessary to incorporate equipment different from the Design Base equipment.
7. Record all Addendum Items.
8. At completion of project, the Contractor shall deliver (1) copy of its Record Drawings to the Construction Manager.
9. Contractor shall accompany its Record Drawings with a transmittal letter, in duplicate, containing the following information:
   a. Date.
   b. Project title and number.
   c. Contractor's name and address.
   d. Title and number of each record document.
   e. Certification that each document as submitted is complete and accurate.
   f. Signature of the Contractor or its Authorized Representative.

## 1.12 GUARANTEES AND WARRANTIES

A. Contractor shall guarantee its equipment, workmanship, and materials for a period of (1) year from the date of Contract Completion. Should defects develop within this period, the Contractor shall, at no cost to the Owner, remedy the defects and reimburse the Owner for all damage to other Work caused either by the defects or as a result of the work of correcting the same.

B. Refer also to Division 01 and other Specification Sections that define the starting date of the guarantee period, or that discuss either additional warranty requirements, or extended equipment warranties beyond the standard period.

C. Post-Warranty Service:
   1. The products and Manufacturers identified throughout these Specifications represent reputable suppliers that generally have an inventory of spare parts, and a network of authorized service providers that can support the products installed on this Project.
   2. Contractor shall assist the Owner for a period of (7) years in obtaining parts and service on the products installed, for a reasonable charge.

3. Once the Contractor's 1-year warranty has expired, the Owner will pay the cost of these parts and service.
4. If the item cannot be repaired, the Contractor shall recommend an equivalent replacement item at a reasonable cost to the Owner.

## 1.13 ABBREVIATIONS AND SYMBOLS

A. Titles and abbreviations may be used in these Specifications. Abbreviations may be shown on the Electrical Drawings. Refer to the list of abbreviations attached to this Section. Refer also to the symbols lists shown on the Drawings for further abbreviations. All titles and abbreviations may not necessarily apply to this Work.

## 1.14 DEFINITIONS

A. "Provide": To furnish, install, and connect to make completely ready for regular operation.

B. "Furnish": To supply or deliver to site complete with all required accessories and installation instructions.

C. "Install": To mount, erect, hang, or fasten in place, and connect to make ready for regular operation.

D. "Concealed": Either embedded in masonry or other construction, or installed below floor slab, behind wall furring, within chases or soffits, within walls, within double partitions, above ceilings, in trenches, in tunnels, or within crawl spaces.

E. "Exposed": In full or partial view; not "Concealed" as defined above.

F. "Accessible Ceiling": Lay-in ceiling with removable ceiling tiles.

G. "Low Voltage": Systems or wiring operating at potentials less than 48 volts.

H. Refer to additional Definitions in Division 01 and in the State Building Codes.

# PART 2 PRODUCTS

## 2.01 DESIGN BASE MANUFACTURER STANDARD

A. The Drawings and Specifications reflect a design based on the specific equipment requirements and configuration for a Design Base Manufacturer. Design coordination of equipment with the building and with other Trades has been made for this specific Model and Manufacturer of equipment. Where several Manufacturers are listed for an item of equipment or material, the first-named shall be considered the Design Base Manufacturer Standard.

## 2.02 OTHER ACCEPTABLE COMPONENTS (MANUFACTURERS)

A. Other Manufacturers listed in the Specifications shall be acceptable; however, whenever the Contractor elects to furnish specified equipment or material manufactured by other than the Design Base Manufacturer, the

Contractor shall be responsible for the cost and coordination of all modifications required to accommodate the elected equipment or material, including any Work of other Trades that might be affected. Where changes to other Trades' Work are required, the Contractor shall include the additional costs of all such Work in its bid.

B. Any specified Equipment Manufacturer furnished by the Contractor, other than the Design Base Manufacturer, shall be, in the opinion of the Architect, equivalent in quality, design, features, performance, arrangement, and appearance to that of the Design Base equipment or material, including any special features or requirements.

C. Lighting Fixtures (wall packs only):
   1. Other Lighting Fixture Manufacturers shall provide the same room/area illumination levels as the minimum values recommended by Illuminating Engineering Society of North America and provided by the Design Base Manufacturer.
   2. Submit photometrics and illumination calculations to validate performance of the fixtures in representative rooms or areas selected by the Engineer.

D. The inclusion of other Manufacturers in these Specifications shall not be construed to infer that each Manufacturer's product has been reviewed by the Architect for this application, or that it will provide all the features or capabilities required, or that its physical dimensions can be accommodated in the available space. Verify that the proposed equipment will provide all features and accommodations provided by the Design Base Manufacturer, and that it will fit in the available space.

E. Where deemed necessary by the Architect, the Contractor shall, at no additional cost to the Owner, prepare layouts for these other brands of equipment that may have different dimensional or service requirements from the Design Base Manufacturer Standard. Submit these layouts to the Engineer for review.

F. Reimburse the Owner for the cost of any design changes incurred by the Architect in the preparation of revised Drawings or Specifications to accommodate the use of any Manufacturer other than the Design Base Manufacturer.

G. The Architect will not give consideration to any other Manufacturer that the Contractor proposes to use, unless the Architect approves the Manufacturer, and specifically names the Manufacturer in the Addenda to the Specifications.

## 2.03 SUBSTITUTIONS

A. Contractor shall submit information for review no later than (10) days prior to the bid opening to the Architect on any other proposed equipment or material that the Contractor desires to use.

B. Contractor shall be responsible for the same costs of coordination and modifications, etc., listed above in Paragraph 2.02, "Other Acceptable Components (Manufacturers)."

C. If the Architect determines that the proposed Manufacturer is acceptable, the Architect will issue an Addendum adding that Manufacturer to the Specification.

## 2.04 EQUIPMENT SUITABILITY

A. All equipment provided shall perform as intended. All items listed shall function properly, and as the Manufacturer intended. Install equipment according to the Manufacturer's recommendations. Properly attach equipment to the floor, wall, or structure. Each item of equipment shall be compatible with all other accessories or hook-ups, including controls, wiring, and other equipment not furnished by the equipment Manufacturer, but required to achieve the intended function.

## 2.05 MISCELLANEOUS ACCESSORIES

A. Provide any additional adapters, fittings, trim, structural steel angles, channels, unistrut, brackets, etc., as necessary to securely install all items of equipment specified or shown on the Drawings. All steel installed outside or exposed to moisture shall be hot-dipped galvanized.

B. These accessories are required even though they may not be shown or detailed on the Drawings.

C. Installation shall be compatible with the building construction on which the item is to be located.

D. Verify the type of construction prior to ordering the equipment item, so that all required accessories are included.

## 2.06 QUANTITIES

A. Equipment may be referred to in these Specifications, or on the Drawings, as either singular or plural; the Contractor shall verify the exact number of items required to complete its Work.

# PART 3 EXECUTION

## 3.01 EQUIPMENT PROTECTION

A. Unless equipment and material can be protectively stored in a manner acceptable to the Architect, they shall not be delivered to the site until the Work is ready to receive them.

B. Protect all equipment and materials during construction from damage by weather, water, dirt, paint droppings, welding and cutting spatters, and other construction activities.

C. All materials or equipment stored outside shall be elevated and protectively covered in a secured and locked area.

D. Store materials and equipment sensitive to weather or construction conditions inside. Where necessary, store sensitive equipment in a heated area.

E. During construction, cover all fixtures, panels, controls, equipment, and other items that are susceptible to damage until they can be installed in place.

F. Immediately repair or replace damaged equipment or materials to the satisfaction of the Architect and at no additional cost to the Owner.

G. Contractor shall protect the building and other Contractors' material and equipment from damage caused by its Work. Protect floors from cutting oil and chips.

H. Use all means necessary to protect materials before, during, and after installation.

I. Refer also to individual Specification Sections for specialized protection.

## 3.02 SAFETY

A. Maintain Project in accordance with Federal, State, and Local Safety and Insurance Standards. All procedures shall comply with the latest regulations of the Occupational Safety and Health Administration (OSHA).

B. Contractor shall provide eye and ear protection, as approved by OSHA, for each of its employees.

C. Contractor shall be solely responsible for construction means, methods, techniques, sequences, procedures, and safety precautions and programs in connection with the Work. The Owner, Construction Manager, Architect, or Engineer will not be responsible for the Contractor's failure to employ proper safety procedures.

D. Contractor shall be solely responsible for the structural design of all temporary items that it uses in the construction of the building, or that become a permanent part of the building, including, but not limited to, hoisting, the temporary bracing for structural steel, and the shoring for concrete and masonry work, cut earth banks, suspended ceilings, equipment, walls, etc.

E. Exercise precaution for the protection of persons and property. Provide guard rails, barricades, enclosures, canopies, passageways, lanterns, warning lights, and other protective safety devices as necessary or required by the Code Authorities having Jurisdiction, and as required to protect persons and property against accidentally dropped materials or other construction hazards. Provide guard lights at all barricades, railings, obstructions in the streets or sidewalks, trenches, or pits.

F. Provide protection as may be required to prevent glass breakage. Replace broken glass at no cost to the Owner.

G. Hazards Control:
   1. Do not dispose of volatile wastes, such as mineral spirits, oil, or paint thinner, in storm or sanitary drains.
   2. Store volatile wastes in covered metal containers, and remove from premises daily.
   3. Prevent accumulation of waste that creates hazardous conditions.
   4. Provide adequate ventilation during use of volatile or noxious substances.

H. Electrical Equipment Operation Safety: Make provisions for locking off and tagging out disconnect switches or other power control devices in accordance with the requirements of Federal OSHA Regulations CFR 1910.147 and NFPA 70E, "Standard for Electrical Safety in the Workplace," Current Edition, Part II, Chapter 5.

## 3.03 AIR HANDLING PLENUMS

A. Where space is used for air handling, such as above ceilings and elsewhere, do not install combustible or noxious materials.

B. All materials shall be listed for use in air handling plenums. All wiring shall be UL 910-listed.

## 3.04 EQUIPMENT ACCESS

A. Locate all units to provide sufficient access to operate equipment or service other items requiring periodic maintenance. Coordinate with structure and with all other Contractors' work.

## 3.05 ACCESS PANELS

A. Unless otherwise noted, furnish all access panels required for concealed electrical work to the General Trades Contractor for installation.

B. Provide all other access panels as needed.

C. Mark locations of access panels on the Record Drawings.

## 3.06 BLOCK COURSE COORDINATION

A. The mounting heights of items are called out on the Drawings for many items. Adjust equipment mounting heights to accommodate brick or block coursing. Coordinate installation of all items in a masonry wall with the General Trades Contractor and Architect.

## 3.07 CUTTING AND PATCHING

A. All cutting and patching shall be accomplished in a neat and workmanlike manner, acceptable to the Architect.

B. Cutting:
   1. Contractor shall perform all cutting required for installing its own Work except as otherwise noted.
   2. Cutting shall be done with such tools and methods so as to prevent unnecessary damage to surrounding areas and equipment.

3. Use rotary drills where the cutting of holes through concrete, brick, plaster, or tile is necessary.
4. No cutting shall be done that will, in any way, reduce the structural strength of the building. Cutting of structural support beams, joists, plates, or other structural members is strictly prohibited without the specific written consent of the Construction Manager, Architect, and Structural Engineer. Should such cutting be necessary, consult the Architect and do not proceed further without written approval of the Architect.

C. Patching:
1. Contractor shall be responsible for patching except as otherwise noted.
2. Only a qualified Finish Tradesman, skilled in the respective craft required, shall perform patching.
3. Patching shall match adjacent surface construction.
4. Materials and equipment used in the patching work shall comply with requirements of other Sections of this Specification.

D. All cutting and patching shall be done promptly, and all repairs shall be made as necessary to leave the entire Work in good condition, including all cutting, fitting, and drilling of masonry, concrete, metal, wood, plaster, and other materials as specified or required for proper assembly, fabrication, installation, and completion of the Work.

E. Coordinate drilling, welding, etc., and method of attachment to columns, joists, beams, etc., with the General Trades Contractor before proceeding.

F. If a Contractor finds it necessary to cut into Work of another Contractor, the cutting and patching shall be performed by such other Contractor at this Contractor's expense. With the written consent of the Architect, the Contractor shall be allowed to perform the cutting. Patching shall be similarly executed.

G. Roofing:
1. General Trades Contractor shall be responsible for all cutting of roofing, modification, roof opening framing, or repair work.
2. A qualified Roofing Contractor shall perform all work in a manner such that any existing roof warranties are not voided.

H. General Trades Contractor, or other Tradesman approved by the Architect, shall replace floors, ceilings, roofs, etc., damaged during construction. The cost of repairs shall be borne by the Contractor causing damage.

I. General Trades Contractor shall provide openings, with lintels if needed, for sleeves, panels, and other similar openings in new interior masonry walls and floors. Locate and dimension the opening for the General Trades Contractor prior to construction.

J. Remove and replace masonry, wall tile, drywall, ceilings, and ceiling tiles as required to install Electrical Work.

K. Contractor shall be responsible for all cutting of the slab related to its own Work.

L. Contractor shall be responsible for construction that is disturbed during the installation of conduit, fixtures, or equipment.

M. Cutting and patching includes remodeling and repairing of previously graveled or paved areas, walks, curbs, sod, floors, etc., as may be required. Saw cuts shall be done in neat, straight lines.

N. Contractor shall repair or replace any roads, sidewalks, or other items that its employees may damage during the performance of this Work.

O. Refer to Section 01 73 29, "Cutting and Patching," for additional requirements.

## 3.08 PAINTING AND RELATED WORK

A. **ALL PAINTING SHALL BE DONE BY A QUALIFIED TRADESMAN SKILLED IN THE CRAFT.**

B. General Trades Contractor shall be responsible for finish painting of walls, ceilings, and other Architectural items in the areas of new and existing construction.

C. Contractor shall repaint any previously finished areas or existing areas disturbed by its own cutting and patching. Painting of the patched area shall match color of the adjacent construction in the general area of the patch. Repaint the entire wall-to-wall and floor-to-ceiling surface if, in the opinion of the Architect, a uniform appearance cannot be accomplished by touch-up.

D. Clean, spot-prime with zinc chromate, and finish equal to the original quality, any factory-finished equipment that has rusted, has been damaged, or has deteriorated. Repaint the entire surface if, in the opinion of the Architect, a uniform appearance cannot be accomplished by touch-up.

E. Clean, remove rust from, and paint with zinc-chromate primer, any electrical support steel and bare ferrous metal that is not factory-painted, shop-painted, or galvanized, and that remains exposed to view in the finished areas of the building, including mechanical/electrical rooms and storage rooms. Consult with the General Trades Contractor to ensure that the prime coat shall be compatible with the finish coat.

F. Clean, remove rust from, and paint with zinc-chromate primer and aluminum-bronze paint, all steel hangers, boxes, straps, and rods, furnished under this Contract, that are not provided with rust-protective finish or are damaged in installation, and that remain exposed to view or are in unfinished and mechanical spaces.

G. Paint with a prime coat any ferrous metal installed outside the building that is not factory-painted, shop-painted, or galvanized.

H. Prime and paint all wood mounting panels with (2) coats gray flameproof paint, both sides and edges.

I. Where painting has already been done, paint all conduits and Wiremold raceways that are later run exposed in “finished” areas. Color shall match structure, ceiling, or wall background.

J. Paint all junction boxes containing fire alarm wiring red.

K. Paint all junction boxes containing emergency power system wiring orange.

L. Refer to Section 09 91 00 for additional requirements.

## 3.09 CLEANING

A. Maintain all work areas in a neat and orderly manner, free of debris. Clean up all occupied travel areas at the end of each shift, or immediately after use for material removed.

B. It is the intent of the Specifications that each Contractor and Subcontractor shall do its own cleanup, move materials that are in the way of construction, repair and replace any damage it does, and do any other work of a similar nature which must be done.

C. Equipment cleaning and touch-up:
   1. Use only cleaning materials recommended by Manufacturer of the surface to be cleaned.
   2. Clean interiors of all enclosures of dirt and debris before installing trim or covers.
   3. Brush-clean, prime, and paint-in-kind rust spots on any part.

D. Final cleaning:
   1. Repair, patch, and touch up all scratched or damaged surfaces to specified finish to match adjacent surfaces, before final acceptance of the work. Repair dents and marred finishes to the satisfaction of the Architect. Prepare for finish painting, where painting is specified.
   2. Thoroughly clean all fixtures, material, finished surfaces of equipment, painted, enameled, or varnished work, and all other exposed finished surfaces, removing all labels, stickers, marks, stains, fingerprints, spots, rust, oil, grease, dirt, dust, and other foreign materials, so that the Work is presented in a complete and finished condition, ready for acceptance and intended use.
   3. Employ experienced workers, or professional cleaners, for final cleaning.
   4. Expedite the cleaning, washing, waxing, and polishing required within other Sections of these Specifications.

E. Refer to Section 01 74 19, “Construction Waste Management and Disposal,” for additional requirements.

## 3.10 TESTS AND INSPECTIONS

A. The Contract Documents, Laws, Ordinances, Rules, Regulations, or Orders of any Code Authority having Jurisdiction may require the Work to be inspected, tested, or approved.

B. Test and check all alarm devices and supervisory switches for proper operation. Submit a written record of these tests to the Architect.

C. Arrange for inspection of the Work by the Code Authority having Jurisdiction. Inspections shall be conducted by the following:
   1. State of Ohio, Department of Commerce, Division of Industrial Compliance, Construction Compliance Section.
   2. City of Whitehall Building Department.
   3. State of Ohio, Department of Commerce, State Fire Marshal Division.
   4. Local Fire Department.

D. Notify the Construction Manager of all scheduled tests and adjustments at least (48) hours before they are scheduled, so that the Construction Manager may witness same. If the Contractor performs any test or adjustment without the Construction Manager present, or without proper notification, the Contractor shall perform the test or adjustment a second time, in the presence of the Construction Manager. Coordinate all test schedules with the Construction Manager to minimize inconvenience.

E. Provide all required testing and obtain approvals. Secure required certificates of inspection, testing, or approval, and include them in the Operating and Maintenance manuals.

F. Contractor shall bear all costs of such inspections, tests, or approvals.

G. Should any of the Work be covered up or enclosed prior to completion of all required inspections and approvals, uncover the Work as required and, after it has been completely inspected and approved, make all repairs and replacements with such materials and workmanship as are necessary to secure the approval of the Architect, and at no additional cost to the Owner.

H. Furnish all meters, equipment, and personnel required, and test as necessary, to demonstrate the integrity of the finished installation to the approval of the Code Authority having Jurisdiction and the Architect.

I. Check each piece of equipment for defects and verify that all parts are properly furnished and installed, that all items function properly, and that all adjustments have been made.

J. Refer to Section 26 05 93, “Testing, Adjusting, and Balancing for Electrical,” for additional requirements.

# TITLES, ABBREVIATIONS, AND SYMBOLS

| | |
|---|---|
| & | And |
| @ | At |
| ∠ | Angle |
| Ø | Diameter |
| # | Number |
| Ø | Round OR Phase |
| A. | Compressed air |
| A.D. | Access door OR Area drain |
| A.F.D. | Acid floor drain |
| A.F.F. | Above finished floor |
| A.P. | Access panel |
| A.W.C.O. | Acid wall cleanout |
| AABC | Associated Air Balance Council |
| AB. | Above |
| ACI | American Concrete Institute |
| ACPA | American Concrete Pipe Association |
| ADA-AG | Americans with Disabilities Act — Accessibility Guidelines |
| ADC | Air Diffusion Council |
| AH | Air handler |
| AHRI | Air-Conditioning, Heating, and Refrigeration Institute |
| ALT. | Alternate |
| ALUM. | Aluminum |
| AMCA | Air Movement and Control Association |
| amp | ampere |
| ANSI | American National Standards Institute |
| APPROX. | Approximately |
| ARCH. | Architect |
| ARR'T. | Arrangement |
| ASA | Acoustical Society of America |
| ASHRAE | American Society of Heating, Refrigerating, and Air Conditioning Engineers |
| ASME | American Society of Mechanical Engineers |
| ASPE | American Society of Plumbing Engineers |
| ASSE | American Society of Sanitary Engineering |
| ASTM | American Society for Testing & Materials |
| AUTO. | Automatic |
| AV | Acid vent |
| AW | Acid waste |
| AWG | American wire gauge |
| AWS | American Welding Society |
| AWWA | American Water Works Association |
| B.D.D. | Backdraft damper |
| B.T. | Bathtub |
| B.V. | Backwater valve |
| BAL. | Balancing |
| BFP | Backflow preventer |
| BHP | Brake horsepower |
| BICSI | Building Industry Consulting Services International |
| BLDG. | Building |
| BSBD.RAD. | Baseboard radiation |
| BSMT. | Basement |
| BTM. | Bottom |
| BTU | British thermal unit |
| C.B. | Catch basin |
| C.I. | Cast iron |
| C.O. | Clean out |
| C/C | Center to center |
| C/L | Center line |
| CAB. | Cabinet |
| CAP. | Capacity |
| CEIL./CLG. | Ceiling |
| CFC | Chlorofluorocarbon |
| CFH | Cubic feet per hour |
| CFM | Cubic feet per minute |
| CFR | Code of Federal Regulations |
| CGA | Compressed Gas Association |
| CHEM. | Chemical |
| CISPI | Cast Iron Soil Pipe Institute |
| COL. | Column |
| COMB. | Combination |
| CONC. | Concrete |
| COND. | Condensate OR Condenser |
| CONN. | Connection OR Connect |
| CONST. | Construction |
| CONTR. | Contractor |
| CONV. | Convector OR Converter |
| COORD. | Coordinate |
| CS | Commercial Standard |
| CSA | Canadian Standards Association |
| CSI | Construction Specifications Institute |
| CT | Current transformer |
| CU. FT. | Cubic feet |
| CU IN. | Cubic inch |
| CUH | Cabinet unit heater |
| D. | Deep |
| D.F. | Drinking fountain |
| D.L. | Door louver |
| D.M. | Damper motor |
| D.S. | Downspout |
| DB | Dry bulb |
| DBL. | Double |
| DCW | Domestic cold water |
| DET. | Detail |
| DHW | Domestic hot water |
| DHWR | Domestic hot water return |
| DIA. / Ø | Diameter |
| DIFF. | Diffuser |
| DIM. | Dimension |
| DISCH. | Discharge |
| DN. | Down |
| DOE | United States Department of Energy |
| DPR. | Damper |
| DR. | Door |
| DW | Distilled water |
| DWG. | Drawing |
| DWH | Domestic water heater |
| DWV | Drain, waste and vent |
| E.A.T. | Entering air temperature |
| E.C. | Electrical Contractor |
| E.S.P. | External static pressure |
| E.T. | Expansion tank |
| E.W.T. | Entering water temperature |
| EA. | Each |
| EFF. | Efficiency |
| EIA | Electronic Industries Alliance |
| ELEC. | Electric OR Electrical |
| ELEM. | Element |
| ELEV. | Elevation |
| ENGR. | Engineer |
| ENT. | Entering |
| EPA | Environmental Protection Agency |
| EQUIP. | Equipment |
| ETL | Electrical Testing Laboratories |

| | |
|---|---|
| EW | Eye wash |
| EWC | Electric water cooler |
| EXH. | Exhaust |
| EXIST. | Existing |
| EXT. | Exterior |
| F & T | Float and thermostatic |
| F. | Fan OR Fire |
| F.D. | Fire damper |
| F.E. | Fire extinguisher |
| F.E.C. | Fire extinguisher cabinet OR Food Service Equipment Contractor |
| F.H. | Fire hydrant |
| F.H.C. | Fire hose cabinet |
| F.H.E.C. | Fire hose/extinguisher cabinet |
| F.V. | Flush valve |
| FCC | Federal Communications Commission |
| FD | Floor drain |
| FDA | Food and Drug Administration |
| FHA | Federal Housing Administration |
| FIG. | Figure |
| FIN. | Finish |
| FIN.RAD. | Finned radiation |
| FLEX. | Flexible |
| FLR. / FL. | Floor |
| FMG | Factory Mutual Global |
| FOR | Fuel oil return |
| FOS | Fuel oil supply |
| FPC | Fire Protection Contractor |
| FPM | Feet per minute |
| FT. | Feet |
| FT.HD. | Feet of head |
| FURN. | Furnish(ed) |
| G | Gas |
| G.C. | General Contractor |
| G.I. | Grease interceptor |
| G.T.C. | General Trades Contractor |
| gal. | Gallon |
| GALV. | Galvanized |
| GEN. | General |
| GFI | Ground fault interrupter |
| GPM | Gallons per minute |
| GR | Grille |
| GRAV. | Gravity |
| H./HT. | Height |
| H.P. | High pressure |
| H.S. | Hair strainer |
| H'STAT | Humidistat |
| HAC | Heating and air conditioning |
| HB | Hose bibb |
| HCFC | Hydrochlorofluorocarbon |
| HHS | United States Department of Health and Human Services |
| HORIZ. | Horizontal |
| HP | Horsepower |
| HPC | High pressure steam condensate |
| HPS | High pressure steam |
| hr. | Hour |
| HTG. | Heating |
| HTR. | Heater |
| HUD | United States Department of Housing and Urban Development |
| HV | Heating and ventilating OR High velocity |
| HVAC | Heating, ventilating, and air conditioning |
| I.D. | Inside diameter |
| IAQ | Indoor air quality |
| ICC | International Code Council |
| ICEA | Insulated Cable Engineers Association, Inc. |
| IDF | Intermediate distribution frame |
| IEC | International Electrotechnical Commission |
| IEEE | Institute of Electrical and Electronics Engineers, Inc. |
| IESNA | Illuminating Engineering Society of North America |
| IN. | Inside OR Inches |
| IND. | Indirect |
| IND. U. | Induction unit |
| INSUL. | Insulation |
| INT. | Interior |
| INV. | Invert |
| INV. ELEV. | Invert elevation |
| IPS | Iron pipe size |
| IRI | Industrial Risk Insurers |
| ISO | International Organization for Standardization |
| J.R. | Janitor's receptor |
| JCAH | Joint Commission for Accreditation of Hospitals |
| kVA | Kilo volt-ampere |
| L. | Length |
| L.A.T. | Leaving air temperature |
| L.W.T. | Leaving water temperature |
| LAB | Laboratory |
| LAV | Lavatory |
| lb. | pound |
| LEED | Leadership in Energy and Environmental Design |
| LH | Left hand |
| LP | Liquefied petroleum |
| LPC | Low pressure steam condensate |
| LPS | Low pressure steam |
| LV'G. | Leaving |
| M.A. | Mixed air |
| M.O. | Motor operated |
| MAN. DPR. | Manual damper |
| MAT. | Material |
| MAX. | Maximum |
| MBH | 1,000 British thermal units/hour |
| MECH. | Mechanical |
| MET./MTL. | Metal |
| MEZZ. | Mezzanine |
| MFR. | Manufacturer |
| MH | Manhole |
| MIN. | Minimum |
| MISC. | Miscellaneous |
| MPS | Medium pressure steam |
| MS | Motor starter |
| MSS | Manufacturers Standardization Society of the Valve and Fittings Industry Inc. |
| MTD./MT. | Mounted OR Mount |
| N.I.C. | Not in contract |
| N.T.S. | Not to scale |
| N2 | Nitrogen |
| N2O | Nitrous oxide |
| NADCA | National Air Duct Cleaners Association |
| NAECA | National Appliance Energy Conservation Act |
| NB | National Board of Boiler and Pressure Vessel Inspectors |
| NCPI | National Clay Pipe Institute |
| NEBB | National Environmental Balancing Bureau |
| NEC | National Electrical Code |
| NEMA | National Electrical Manufacturers Association |
| NESHAPs | National Emissions Standards for Hazardous Air Pollutants |
| NFPA | National Fire Protection Association |
| NIOSH | National Institute for Occupational Safety and Health |
| NIST | National Institute of Standards and Technology |
| NO. OR # | Number |

| | |
|---|---|
| NOM. | Nominal |
| NP | Not permitted |
| NPT | National Pipe Thread Tapered |
| NSF | National Sanitation Foundation |
| NSPE | National Society of Professional Engineers |
| O. | Oxygen |
| O.A. | Outside air |
| O.D. | Outside diameter |
| O.I. | Oil interceptor |
| O.V. | Outlet velocity |
| O/C | On center |
| OAC | Ohio Administrative Code |
| ODH | Ohio Department of Health |
| ODMH | Ohio Department of Mental Health |
| ODMR/DD | Ohio Department of Mental Retardation and Developmental Disabilities |
| ODOE | Ohio Department of Energy |
| ODOT | Ohio Department of Transportation |
| ODRC | Ohio Department of Rehabilitation and Correction |
| ODYS | Ohio Department of Youth Services |
| OPG. | Opening |
| OPP. | Opposite |
| ORC | Ohio Revised Code |
| OSHA | Occupational Safety and Health Administration |
| OU./OZ. | Ounce |
| P.D. | Pressure drop |
| P.I.V. | Post indicator valve |
| P/L | Property line |
| PDI | Plumbing & Drainage Institute |
| PEI | Petroleum Equipment Institute |
| PLBG. | Plumbing |
| PNEU. | Pneumatic |
| PRESS. | Pressure |
| PROP. | Propeller |
| PRV | Pressure-reducing valve |
| PSF | Pounds per square foot |
| PSI | Pound-force per square inch |
| PSIG | Pound-force per square inch gauge |
| PT | Plaster trap OR Potential transformer |
| PVC | Polyvinyl chloride |
| R | Register |
| R.A. | Return air |
| R.D. | Roof drain |
| R/W | Right of way |
| RAD. | Radius OR Radiation OR Radiator |
| RECIRC. | Recirculating |
| REG. | Register |
| REINF. | Reinforced |
| REL. | Relief |
| REQ'D. | Required |
| RH | Right hand |
| RHC | Reheat coil |
| RM. | Room |
| RPM | Revolutions per minute |
| RTA/C | Rooftop air-conditioning unit |
| RW | Raw water |
| RWC | Rainwater conductor |
| S | Sink |
| S & R | Supply and return |
| S. DPR. | Smoke damper |
| S.A. | Shock absorber OR Supply air |
| S.F. | Square feet |
| S.M., S/M | Sheet metal |
| S.P. | Static pressure |
| S.S. | Service sink OR Storm sewer |
| S.S., S/S | Stainless steel |
| SAN. | Sanitary sewer |
| SB | Shampoo bowl |
| SD | Shower drain OR Smoke detector |
| SECT. | Section |
| SHR. | Shower |
| SHT. | Sheet |
| SHT. MT'L. | Sheet metal |
| SMACNA | Sheet Metal and Air Conditioning Contractors National Association |
| SPEC. | Specification |
| SQ. | Square |
| SQ. FT. | Square feet |
| SQ. IN. | Square inch |
| ST | Sound trap |
| STAT | Thermostat |
| STD. | Standard |
| STL. | Steel |
| STM. | Storm |
| SUCT./S | Suction |
| SW | Softened water |
| SW. | Switch |
| T.W. | Tempered water |
| T'STAT | Thermostat |
| TD | Temperature difference |
| TEMP. | Temperature |
| THERM. | Thermometer OR Thermostat |
| TIA | Telecommunications Industry Association |
| TYP. | Typical |
| UC | Undercut |
| UH | Unit heater |
| UL | Underwriters Laboratories, Inc. |
| UR | Urinal |
| USGBC | United States Green Building Council |
| UV | Unit ventilator |
| V. | Vent |
| V.T.R. | Vent through roof |
| VAC. | Vacuum |
| VC | Vacuum cleaning |
| VCP | Vitrified clay pipe |
| VERT. | Vertical |
| VIB. ISO. | Vibration isolator |
| VOC | Volatile organic compound |
| VSP | Vitrified sewer pipe |
| W. | Width OR Water |
| W.G. | Water gauge |
| W/ | With |
| W/O | Without |
| W/W | Wall to wall |
| WAT. | Water |
| WB | Wet bulb |
| WC | Water closet OR Water column |
| WH | Wall hydrant OR Water heater |
| WO | Waste oil |
| WOG | Water/oil/gas |
| XFMR | Transformer |
| YD. | Yard |
| YH | Yard hydrant |

END OF SECTION 26 05 00

# SECTION 26 05 01

# ELECTRICAL DEMOLITION AND RENOVATION

## PART 1 GENERAL

### 1.01 RELATED DOCUMENTS

A. Section 02 41 19, “Selective Demolition.”

### 1.02 DESCRIPTION

A. Provide demolition and renovation work as shown on the Electrical Drawings.

B. Provide demolition as required to install the new Electrical Work.

C. Relocate any existing equipment and wiring as required to accommodate the installation of the Work. **THE DRAWINGS DO NOT SHOW EVERY ITEM OF DEMOLITION OR RENOVATION REQUIRED TO COMPLETE THE WORK.** Review the existing conditions and plan work accordingly.

D. Revise and update existing Panel Schedules.

E. Refer to Division 01 for protection of the existing building during demolition work.

### 1.03 INSPECTION

A. At the beginning of construction, carefully inspect the entire Project and verify with the Architect and Construction Manager all items designated to be removed or to remain.

B. Locate all existing utilities requiring removal and determine requirements for disconnecting and capping.

C. Locate all existing active circuits designated to remain and protect as required to keep in service.

### 1.04 PREPARATION

A. Before ordering equipment or starting work on this renovation, verify the ampacity and voltage of the existing electrical distribution system, measure the existing demand, and verify the adequacy for use as temporary power.

B. Notify the Architect and Construction Manager at least (2) full working days prior to commencing work in a particular area.

C. Schedule all work in a careful manner with full consideration for the Owner and its personnel, avoiding interference with the use of, and passage to and from, adjacent areas and facilities designated to remain in use during demolition.

D. Disconnect, or arrange for the disconnection of, all utilities or equipment designated to be removed or replaced. Perform all such work in accordance with the requirements of the Owner.

E. Coordinate all demolition, and any disconnection of equipment designated to be removed, with the Architect and Construction Manager, as required.

F. Coordinate disconnection of electrical service to fixtures and equipment to be removed and the removal of conduit, wireways, wiring, and other electrical devices with other Contractors.

G. Carefully disconnect existing fixtures, receptacles, and equipment. Many circuits may serve more than the renovated area.

H. Provide protection for the Owner's personnel and others as required.

I. Protect remaining property from damage during demolition and removal of debris.

## 1.05 DEMOLITION

A. Demolish and remove abandoned lines, conduit, equipment, equipment foundations and supports, and all other existing items either designated for removal, or as required for the renovation.

B. Disconnect and completely remove all existing electrical facilities that are not required to maintain service to other equipment or facilities.

C. Remove all existing wiring that is no longer used. Any exposed section of raceway system that interferes with intended design or use of facility shall be cut flush at surface and plugged.

D. Do not remove, cover up, or abandon existing operating electrical facilities. Maintain service to equipment that remains. Re-feed where necessary.

E. Existing outlets that are to be removed, and that have conduits rising from the floor slab, shall have the conduits cut below floor level. Rework as required to provide feed-through service to other remaining outlets. Pull new wire between remaining outlets affected by the feed-through. Patch floor as required to original condition.

F. Empty boxes shall be closed with blank cover plates. If equipped with existing devices, the devices shall be removed, and the conductors shall be either removed to the adjacent outlet, or reconnected as required to provide feed-through service.

G. Abandoned outlet boxes shall have the cover plate and device removed, and conductors shall be pulled back to an adjacent outlet.

H. Disconnect and remove all existing devices and boxes on walls to be removed. Maintain circuits to devices that are to remain in use. Revise and extend conduit and wiring as necessary.

I. Do not use equipment or methods that will cause damage to adjacent construction designated to remain.

J. Protect and maintain all active utilities and services. Repair or replace, at no expense to the Owner, all such items disturbed in the execution of Work.

K. Repair or replace surfaces and elements of structures **NOT** scheduled to be demolished, but damaged due to demolition or lack of protection.

L. Items that are completely concealed in existing structure and will not interfere with new work may remain. Cap and plug at ends.

M. Reroute and relocate any items as necessary to permit installation of new work.

## 1.06 RELOCATION OF EXISTING FIXTURES AND EQUIPMENT

A. Contractor shall relocate existing fixtures and equipment as required to accomplish its work. Prior to handling fixtures and equipment, report any existing damage to the Construction Manager. Existing fixtures and equipment may be stored on a short-term basis in spaces adjacent to each work area. Coordinate storage locations with the General Trades Contractor, Architect, and Construction Manager.

## 1.07 REMOVAL AND SALVAGE

A. Remove all items of equipment, copper wiring, and other material as indicated on the Drawings and in these Specifications. Unless otherwise noted, all usable items shall be salvaged and reused where possible.

B. Reuse existing devices, panels, breakers, conduit, and wiring if in good condition, not defective, and in compliance with the National Fire Protection Association (NFPA): 2011 NFPA 70, "National Electrical Code® (NEC)." Report any deficiencies to the Architect.

C. Items Being Removed That Are To Be Reused:
   1. Carefully remove and store usable items until reinstallation is to proceed.
   2. Coordinate locations of stored materials with the General Trades Contractor, Architect, and Construction Manager.

D. Items Being Removed That Are **NOT** To Be Reused:
   1. The Owner will have first right of refusal.
   2. Carefully remove any items that the Owner wishes to keep, and deliver them in good condition to the permanent storage location on site designated by the Construction Manager.

E. Dispose, off-site, of all items not wanted by the Owner.

## 1.08 ELECTRICAL RENOVATION WORK

A. Rework or relocate, as required, any existing panels, lighting fixtures, outlets, equipment, conduit, and wiring that interfere with any new Work.

B. Relocate all existing electrical devices, fixtures, and equipment in a neat and workmanlike manner.

C. Provide new fixtures, devices, other electrical equipment and items, and wiring as required.

D. Review nameplate data of all equipment being rewired and notify the Architect immediately if any changes are required to properly wire the equipment.

E. Note locations of any abandoned conduit and wiring, including exterior lines, on the Record Drawings.

END OF SECTION 26 05 01

# SECTION 26 05 06

# ELECTRICAL SUBMITTALS

## PART 1 GENERAL

### 1.01 DESCRIPTION

A. Submittal dates:
   1. Within (14) calendar days after Award of Contract, submit complete materials list of all items proposed to be provided on this Project.
   2. Submit shop drawings within (28) days after Award of Contract.

B. Materials and equipment installed under the Electrical Contract shall meet all the requirements of the Contract Documents. Do not order or install materials or equipment until submittals are reviewed and approved by the Engineer.

C. Refer to the list at the end of this Section and to the Sections listed in Section 26 05 00, "Common Work Results for Electrical," Paragraph 1.01, for the items that the Contractor shall submit.

D. Submit complete copies of the catalog data or shop drawings for each manufactured item of equipment and all components to be used in the Work, including the following:
   1. Brand name.
   2. Catalog number.
   3. Specific performance data.
   4. Material description.
   5. Rating.
   6. Capacity.
   7. Dimensional data.
   8. Material gauge or thickness.
   9. Wiring diagrams.

E. Manufacturer's Catalog Sheets, Brochures, Diagrams, Schedules, Performance Charts, Illustrations, and Other Standard Descriptive Product Data: Contractor shall:
   1. Clearly mark or highlight each copy to identify pertinent materials, products, or models.
   2. Show dimensions and clearances required.
   3. Show performance and characteristics and capacities.
   4. Show wiring diagrams and controls.

F. Catalog data for equipment reviewed by the Engineer shall not take precedence over the requirements of the Contract Documents. Review by the Engineer shall not relieve the Contractor from the responsibility for deviations from Drawings or Specifications, nor from the responsibility for providing proper clearance and coordination with other Contractors.

G. When submitted for review, all shop drawings shall bear the Contractor's signed certification of the following:
   1. Contractor has reviewed, checked, and approved the shop drawings.
   2. Shop drawings have been coordinated with the requirements of the Project and with the provisions of the Contract Documents.
   3. Contractor has verified all field measurements and construction criteria, materials, catalog numbers, and similar data.

H. The Engineer's review is **ONLY** for conformance with the design concept of the Project and with the Contract Documents. Contractor shall be solely responsible for construction means, methods, techniques, sequences, procedures, and safety precautions and programs in connection with the Work.

## 1.02 SHOP DRAWINGS

A. Indicate arrangement of component parts, physical dimensions, materials, electrical and mechanical service requirements, colors (where required), controls, accessories, capacities, and performance characteristics.

B. Prior to submitting shop drawings, the Contractor shall stamp and sign its certification that the equipment shown on the submittals meets all the requirements of the Contract Documents. **UNSIGNED COPIES WILL NOT BE REVIEWED.**

C. Submit (8) copies, unless otherwise noted. Approved shop drawings shall be distributed as follows:

| QUANTITY | TO |
|---|---|
| 2 | Architect |
| 1 | Engineer |
| 1 | Construction Manager |
| 1 | Contractor |
| 3 | Operating and Maintenance Manuals |

   1. **NOTE:** At the Contractor's option, shop drawings may be submitted electronically in Portable Document Format (PDF). Contractor shall be responsible for making all copies for distribution and file.

## 1.03 CONTRACTOR RESPONSIBILITIES

A. Completely review Shop Drawings, product data, and samples prior to submission.

B. Determine and verify the following:
   1. Field measurements.
   2. Field construction criteria.
   3. Catalog numbers and similar data.
   4. Conformance with Specifications.
   5. Quantities and sizes.

C. Coordinate each submittal with requirements of the Work and the Contract Documents.

D. Notify the Engineer, in writing, at time of submission, of any deviations in the submittals from the requirements of the Contract Documents.

E. Contractor shall make submittals promptly in accordance with the approved schedule, and in such sequence as to cause no delay either in its Work or in the work of any other Contractor.

F. Immediately make any corrections or changes in rejected submittals as required by the Engineer and resubmit until accepted.

G. If the Contractor orders equipment or materials, or begins installation, fabrication, or work prior to return of approved submittals, it shall be "at the Contractor's own risk."

H. When (2) or more items of the same material or equipment are required, they shall be of the same Manufacturer.

I. Incorporate Shop Drawings into the Operating and Maintenance Manuals.

## 1.04 CERTIFICATIONS

A. Provide:
1. Test Agency results verifying capacities, operating conditions, and power requirements at design conditions.
2. Manufacturer's statement of compliance with Standards discussed in individual Specification Sections.
3. Equipment labels indicating Certification requirements.
4. Quality standard designations on each unit piece, e.g., each device, fixture, or component.
5. Typed verification that noted testing procedures were complied with.
6. Other Certifications listed in other Sections of the Specifications.

## 1.05 REQUIRED SUBMITTAL INFORMATION

A. The items listed below may not be a complete list of required submittals. Submit for approval all items to be provided, whether listed or not.

**KEY FOR REQUIRED SUBMITTALS**

A Catalog Cuts/Shop Drawings (8 copies).
B Operating and Maintenance Manuals (3 copies).
C Color samples (3 each).
D Product samples (2 each).
E Typed statement of material to be furnished.
F Typed verification of compliance with certification requirements.
G Test.
H Coordination Drawings.

(Submit number of copies indicated. If not indicated, submit full quantity of copies previously listed.)

| **ELECTRICAL SUBMITTALS REQUIRED** | **KEY** |
|---|---|
| Lighting Control System | A, G |
| Occupancy Sensors | A, G |

Line-Voltage Conductors .....A
Raceway and Fittings .....A
Boxes .....A
Wiring Devices and Plates.....A
Disconnect Switches .....A
Fuses.....A
Lighting Fixtures and Lamps.....A, G
Fire Alarm Drawings .....A
Fire Alarm System Components.....A, G
Operating and Maintenance Manuals (Refer to Section 26 05 07).....B-3

END OF SECTION 26 05 06

# SECTION 26 05 07

# ELECTRICAL OPERATING AND MAINTENANCE MANUALS

## PART 1 GENERAL

### 1.01 RELATED DOCUMENTS

A. Section 01 77 00, “Closeout Procedures.”

B. Section 01 78 39, “Project Record Submittals.”

C. Section 26 05 60, “Requirements for Completion of Electrical Work.”

### 1.02 DESCRIPTION

A. Compile Operating and Maintenance Manual upon completion of the Work, and as required for final acceptance. Submit draft of Operating and Maintenance Manual to the Engineer for review and approval (90) days before Contract Completion.

B. Submit final corrected Operating and Maintenance Manual (7) days before Contract Completion.

C. Upon approval, provide (3) Operating and Maintenance Manuals.

## PART 2 PRODUCTS

### 2.01 OPERATING AND MAINTENANCE MANUALS

A. The following items, together with any other pertinent data, shall be included in each Operating and Maintenance Manual. This list is not necessarily complete and shall be used only as a guide. Format of manual to be as follows:

1. Operating and Maintenance Manuals shall be loose-leaf, 3-ring, hardcover binders, no larger than 11 in. wide x 12 in. high. Material shall be typewritten or printed, and be fully legible. Each section shall be divided by labeled tabs.
2. Cover:
   a. Title of Project.
   b. Date of Project completion.
   c. Name and address of the Owner.
   d. Date of submittal.
   e. Name and address of the Contractor.
   f. Name and address of the Architect.
   g. Name and address of the Engineer.
3. Second Page: Index.
4. First Section: A copy of each shop drawing and approval submittal with an index at the beginning of the section.
5. Second Section:
   a. A list of all equipment used on the job.

b. Parts list with numbers of replaceable items, including sources of supply.
c. Manufacturers' and nearest Factory Representatives' names and addresses.
d. Model and Serial numbers of components of systems installed.
e. Routine and 24-hour emergency service/repair information:
   1) Name, address, and telephone number of servicing agency.
   2) Names of personnel to be contacted for service arrangements.

6. Third Section:
   a. Description of systems.
   b. Manufacturer's literature describing each piece of equipment, including the following:
      1) Operating and maintenance instructions.
      2) Start-up and shutdown procedures.
      3) Routine and emergency servicing instructions.
   c. List of fuses used and of lamps used.
   d. Copies of all panel directories.
   e. Copies of all testing reports.
   f. Final report of electrical load balance.
   g. Prints of all system wiring and control diagrams.
   h. All certifications and related information.
   i. Copies of all written warranties.
   j. The Owner's receipt of spare parts. Refer to Section 26 05 60.
   k. Copy of the signed and dated letter from the Owner, stating satisfactory completion of instruction, listing names of personnel instructed, and listing names of persons giving the instruction.

B. Refer to Section 01 77 00 and Section 01 78 39 for additional requirements.

END OF SECTION 26 05 07

# SECTION 26 05 08

# TEMPORARY LIGHTING AND POWER

## PART 1 GENERAL

### 1.01 RELATED DOCUMENTS

A. Section 01 21 00, “Allowances.”

### 1.02 DESCRIPTION

A. Codes: Comply with the provisions of the following:
   1. National Fire Protection Association (NFPA): 2011 NFPA 70, “National Electrical Code® (NEC).”
   2. Institute of Electrical and Electronics Engineers, Inc., “National Electrical Safety Code®.”
   3. United States Department of Labor, Occupational Safety and Health Administration, Part 1926, “Safety and Health Regulations for Construction.”
   4. Applicable Local Electrical and Building Codes.

B. Energy Consumption: The Owner will pay for the cost of temporary service and electrical energy used during construction.

### 1.03 GROUNDING

A. System Ground: Ground power service and distribution system properly. Whenever a system neutral point is established, install neutral grounding.

B. Equipment Ground: Provide a ground wire capable of equipment grounding with all feeders and branch circuits not installed in metallic raceways.

C. All lighting, receptacles, and power circuits shall have a continuous ground. Integrity of all ground systems shall be checked at least every (3) months or whenever there is evidence of physical damage.

### 1.04 POWER AND DISTRIBUTION SYSTEM

A. Balance loads connected to 3-phase service.

B. All panel feeders shall be installed in conduit. “BX” will not be permitted.

C. All branch wiring shall be protected from accidental damage. Flexible cables and extension cords shall be extra-hard-usage Type (S), (SE), (ST), or (SO).

D. Equipment and Devices:
   1. Lighting fixtures, and wiring devices used for temporary lighting and power.
   2. All step-down transformers used within the building shall be dry-type construction.

3. Use #12 wire for branch circuits shorter than 100 ft. to the last receptacle or outlet, and #10 wire for circuits longer than 100 ft.

E. Provide temporary lighting ((1) 100 watt incandescent fixture per 100 sq. ft.), disconnects, and receptacles as required; arrange for service; and pay for all permits required.
   1. Temporary lighting: Provide fixtures suitable for the environment and sufficient to provide an average maintained illumination of 15 foot-candles, minimum.
   2. Temporary receptacles: Provide an average of (2) receptacles per 400 sq. ft. of construction area. Connect no more than (4) receptacles to (1) 20 amp. circuit. All receptacles shall be GFI type.

F. Safety: Eliminate all tripping hazards and post signs regarding specific hazards that are presented by the temporary wiring system.

G. Contractor may use existing panels for lighting and power required during construction.

H. Other Contractors shall provide their own extension cords to extend power to their power tools and equipment, and may use existing receptacles.

END OF SECTION 26 05 08

# SECTION 26 05 11

# EQUIPMENT HOOK-UP AND FINAL CONNECTION

## PART 1 GENERAL

### 1.01 RELATED DOCUMENTS

A. Section 23 05 08, “HVAC Electrical Coordination.”

### 1.02 DESCRIPTION

A. Coordinate the electrical requirements of equipment with the Supplying Contractor or Manufacturer.

B. Provide plug-in or rough-in and final connection for each piece of equipment requiring power, including, but not limited to, the following:
   1. All HVAC equipment, including the items listed below. Refer to Section 23 05 08.
      a. Cabinet unit heater.
      b. Heat pumps.
      c. Rooftop air-handling unit (DOAS).
      d. Fan coil units.
   2. Overhead projectors.

END OF SECTION 26 05 11

# SECTION 26 05 15

# ELECTRICAL SLEEVES

## PART 1 GENERAL

### 1.01 RELATED DOCUMENTS

A. Section 01 73 29, “Cutting and Patching.”

B. Section 07 92 00, “Joint Sealants.”

C. Section 26 05 00, “Common Work Results for Electrical.”

### 1.02 DESCRIPTION

A. Sleeve where electrical work passes exposed through walls, and where any electrical work passes through smoke-rated or fire-rated separations, equipment room walls, or above-grade floors.

B. Indicated sizes and locations are based on early Project information and should be verified by the Contractor.

C. Chases and constructed openings that are not indicated on the Drawings shall be provided at the expense of the Contractor requiring the constructed chase or opening.

D. Later, if it becomes necessary to cut into the work because of the failure of the Contractor to notify the General Trades Contractor, then the General Trades Contractor shall do any cutting and patching required later, at the Contractor’s expense.

E. Provide dimensions and locations of openings required in walls for sleeves and similar items, and deliver sleeves, to the General Trades Contractor, so as not to delay construction.

F. **BEFORE CONSTRUCTION OF MASONRY OR CONCRETE WALLS IS STARTED**, give the General Trades Contractor locations and sizes of all openings required for the installation of equipment or sleeves.

G. If sleeves are not installed due to the fault of the Contractor, holes through masonry or concrete construction shall be core drilled by the General Trades Contractor, at the expense of the Contractor.

H. In Drywall, Masonry, or Concrete Wall Construction:
   1. Furnish sleeves for electrical items, including conduit, cable trays, busways, and telephone, data, paging, and access control wiring, to the General Trades Contractor. General Trades Contractor shall install sleeves where directed by the Contractor.
   2. Option for above ceiling only: General Trades Contractor shall omit block(s) where required for penetrations, and shall provide square-finished opening. Do not omit blocks in sound barrier walls, under bearing points, or in fire-rated or smoke-rated walls.

3. Coordinate with the Architect and General Trades Contractor.
4. General Trades Contractor shall provide openings through metal building walls and seal watertight.

I. Verify which walls, ceilings, or floors are fire-rated, if any, and provide approved fire-blocking or fire-protective devices as required.

J. Carefully coordinate and check locations of sleeves immediately before and after each concrete pour and masonry installation.

K. Sleeves are not required in floor slabs on grade or in core-drilled openings not requiring water-proofing or firestopping. **Exception:** Sleeves are required at core drilling through hollow core pre-cast slabs and through concrete block walls, to facilitate containment of required firestopping material.

L. Sleeving with absolutely watertight seal is required for electrical work passing through exterior walls above grade, and underground foundation walls and other below-grade penetrations into building.

M. Furnish all conduit sleeves and caulking for openings in walls and turn them over to the General Trades Contractor for installation and caulking.

N. General Trades Contractor shall install sleeves in walls.

## 1.03 QUALITY ASSURANCE

A. Standards:
1. Factory Mutual Global (FMG).
2. Underwriters Laboratories, Inc. (UL).

# PART 2 PRODUCTS

## 2.01 STANDARD SLEEVES

A. Sleeve Material:
1. Up to 8 in. diameter: Machine-cut Schedule 40 black steel pipe.
2. Sleeves may be split, where used on existing electrical work through non-bearing walls.

B. Sizing: Sleeves shall be large enough for insulation to be continuous, or for watertight or fire-rated sleeve seals to be installed. Size to allow 1/2 in. minimum clearance all around.

## 2.02 WATERTIGHT SLEEVE SEALS

A. Oakum Caulking: Thiokol Corp. With lead-pour or elastomeric sealant. Elastomeric sealant shall be 2-component, polysulfide or polyurethane.
1. Other Acceptable Manufacturers: Approved equal by 3M, Calpico, or Hilti.

B. **(Option)** Compression Seals: Thunderline Corp. Linkseal. Stainless steel bolts and nuts. Provide correct size seal, and coordinate with sleeve size.
   1. Other Acceptable Manufacturers: Approved equal by Wayne, Michigan, or Calpico.

C. Provide sleeves with waterstop anchor flange at midpoint where penetrating structure at or below grade.
   1. Acceptable Manufacturers: Calpico, 3M, or Hilti.

## 2.03 FIRE-RATED SLEEVE SEALS

A. ASTM E119 and E814 Silicone RTV foam, UL-approved.

B. Acceptable Manufacturers: Dow Corning 3-6548, Chase Foam, 3M Fire Barrier caulking or putty, IPC Flamesafe, Carborundum Fibersil, Nelson Fire Stop, Standard Oil Co. Fyre Putty, Johns-Manville Cerafiber, KBS Mortar Seal, Hilti Fire Stop, International Protective Coatings Corporation "Flame-Safe," or CSD Sealing Systems "FSP."

# PART 3 EXECUTION

## 3.01 COORDINATION

A. Coordinate location of sleeves, core drilled holes, and other holes required with the General Trades Contractor, equipment, and other Trades.

## 3.02 CUTTING

A. Cut off sleeves through walls flush with each surface.

B. Cut off sleeves 1/8 in. above finished floors and 3 in. above floors in kitchens, utility rooms, equipment rooms, and shafts. Bottom of sleeve shall be cut off flush with surface.

C. Refer to Section 01 73 29 for specific requirements regarding approved cutting methods.

## 3.03 INSTALLATION

A. Conduit shall not bear on sleeves. Sleeves shall be installed plumb and true to line, grade, and position.

B. Fire Blocking of Penetrations of Fire-Rated Construction:
   1. Use approved, UL-listed, fire-retardant sealants, backing, and packing as required to maintain fire rating of the structure penetrated.
   2. Spray UL-listed foam sealant around exposed conduits entering and leaving fire-rated wall or floor structures.
   3. To ensure fire blocking, close space around conduits and other electrical items passing through walls and floors. Seal space up to a 1/2 in. gap with sealant or caulking. Close off space greater than a 1/2 in. gap with sheet metal and seal airtight.
   4. For larger openings, including cable trays, provide UL-listed, FMG-approved KBS sealbags as manufactured by International Protective Coatings Corporation.

5. Pack all fire-rated or sound-rated separation sleeves with glass fiber, high-temperature mineral wool, aluminum-silica fiber, fire-retardant rope, calcium silicate, or other noncombustible material to maintain fire rating of structure, and finish with fire-rated sleeve seals.
6. Fill space around all sleeves extending into exposed areas with material compatible with adjacent construction and finish.
7. All openings shall have been UL-tested utilizing the proper rated penetrations to be equal to, or greater than, the barrier assembly in which the penetration occurs.
8. Install all penetrations and openings in accordance with the Manufacturers' instructions.
9. The fire-blocking assembly shall maintain the required fire-resistance rating of the wall or floor in which it is placed, and a further sealant shall be applied, if necessary, to attain a smoke-tight condition. Openings without sleeves shall be closed in the same manner.
10. Refer to Section 07 92 00 for additional requirements.

C. Unused sleeves shall be plugged, fire-packed, and finished to match adjacent surface.

END OF SECTION 26 05 15

# SECTION 26 05 19

# LOW-VOLTAGE ELECTRICAL POWER CONDUCTORS AND CABLES

## PART 1 GENERAL

### 1.01 PREFACE

A. **Terminology:** This Section applies to 600 volt insulation rated conductors used for 120 volt, 277 volt, and other "line" voltages. This Section also applies to 300 volt insulation rated conductors used for low-voltage systems operating at less than 48 volts.

### 1.02 RELATED DOCUMENTS

A. Section 26 05 33, "Raceways and Boxes for Electrical Systems."

B. Section 26 05 93, "Testing, Adjusting, and Balancing for Electrical."

C. Section 26 09 00, "Instrumentation and Control for Electrical Systems."

### 1.03 DESCRIPTION

A. Provide conductors and cable for secondary feeder and branch circuit wiring, special system wiring, and control wiring.

B. All feeder and branch circuit conductor sizes indicated on the Drawings shall have an ampacity equal to that listed in 2011 NEC Table 310.15(B)(16) for copper conductors.

C. Unless otherwise noted, all conductors shall be enclosed in a continuous, grounded raceway system.

D. All wiring shall be new; no existing wiring shall be reused, unless otherwise noted on the Drawings.

E. Minimum Size:
   1. Lighting and power branch circuits: #12 AWG Cu.
   2. Control wiring: #14 AWG Cu.

### 1.04 QUALITY ASSURANCE

A. Standards:
   1. National Fire Protection Association (NFPA): 2011 NFPA 70, "National Electrical Code® (NEC)."
   2. Underwriters Laboratories, Inc., (UL) Label.

## PART 2 PRODUCTS

### 2.01 CONDUCTORS

A. Line Voltage (120 volts and higher) Conductors: All conductors smaller than #12 AWG shall be solid. All conductors #12 AWG and larger shall be

stranded copper, 600 volt insulation, Type THWN or XHHW 75 deg. C., and color-coded as indicated below.

B. Low-voltage control wiring shall be stranded copper, 300 volt insulation, Type THWN 75 deg. C.

C. Type THHN 90 deg. C. conductors shall be used for all ballasted lighting fixtures.

D. Acceptable Manufacturers: Service Wire, Cerrowire, Southwire, Aetna, AIW, or Essex/Superior.

## 2.02 SPLICES

A. Splices in conductors #10 AWG and smaller wire shall be made with connectors, or with mechanically crimped sleeves, which shall be insulated with pressure-sensitive electrical tape.
   1. Acceptable Connector Manufacturers: Minnesota Mining and Manufacturing Company insulated “Scotch Locks,” Ideal Company “Wing-nut,” or Thomas & Betts Type “PT.”
   2. Acceptable Manufacturers of Mechanically Crimped Sleeves: Thomas & Betts or Ideal Company.
   3. Acceptable Manufacturers of Pressure-Sensitive Electrical Tape: Minnesota Mining and Manufacturing Company “Scotch 33+.”

B. Splices in conductors #8 AWG and larger shall be made with pressure type mechanical connectors and insulated with (2) layers of insulating putty and (2) layers of “Scotch 88” tape.

## 2.03 PULLING LUBRICANTS

A. Use only UL-listed pulling lubricants.

B. Acceptable Manufacturers: Ideal Company “WireLube” or “Yellow 77,” Klein, or Buchanan.

## 2.04 ADHESIVE TAPES

A. Acceptable Manufacturers: Thomas & Betts “WM,” Panduit, or Brady.

# PART 3 EXECUTION

## 3.01 WIRING INSTALLATION

A. Unless noted otherwise, all conductors, including optical fiber and other special systems, shall be installed in conduit.

B. Increase branch circuit wiring shown on the Drawing by (1) size for homeruns more than 100 ft. long and increase wire by an additional (1) size every 100 ft. thereafter.

C. Multiple homeruns shall be permitted in any conduit run, however, a full size neutral shall be provided for each homerun. All multiple wiring installations shall be derated in accordance with 2011 NEC Table 310.15(B)(3)(a), or

larger conductors shall be installed. Provide a neutral conductor for each circuit; **NO NEUTRAL SHARING WILL BE PERMITTED.**

D. Connections in #10 AWG and smaller shall be made with threaded-on plastic or nylon insulated wire nuts. Crimp connectors, except butt connectors, are prohibited. Joints in #8 AWG and larger shall be made with pressure-type mechanical connectors insulated with plastic electric tape.

E. Free ends and loops at boxes and enclosures shall be pushed back in box and protected by blank covers or other means until the interior painting and decorating work is completed. Swab all conduits clean and dry before pulling wire. Wires #8 AWG and smaller shall be hand-pulled. Refer to Section 26 05 93 for testing of conductors.

F. Leave at least 6 in. of free conductor at all outlets, except where conductors are intended to loop without splices through outlets for fixtures or wiring devices.

G. The following wire color code shall be used as applicable to this Project:

| **WIRE** | **120/208 VOLT** | **277/480 VOLT** |
|---|---|---|
| Phase A | Black | Yellow |
| Phase B | Red | Orange |
| Phase C | Blue | Brown |
| Neutral | White | Gray |
| Ground | Green | Green |
| Isolated Ground | Green/Yellow | N.A. |

Emergency: Same as above, but with 1/2 in. red tape wrapped twice around maximum 12 in. intervals at access points.

H. Test and permanently tag each conductor wire, except neutrals, in panelboard gutter, by circuit number, before connecting to panelboard. Wrap adhesive tapes around the wire and form into a flag.

I. Use deoxidant cleaner on all wiring connections.

J. Tag and identify all conductors entering or leaving terminal wiring strips.

K. Low-voltage and line-voltage conductors shall each be installed in separate conduits.

L. The following low voltage special system conductors shall be installed in separate conduits:
1. Telephone.
2. Data.
3. Fire alarm.
4. Intercom.
5. Television.
6. Cable television.
7. Control wiring.

M. Low voltage wiring shall be installed in conduit at the following locations:
   1. Where run exposed.
   2. Where wiring rises up inside walls.
   3. Where wiring is run below floor.
   4. Where wiring is run through or above inaccessible ceilings or in chases.
   5. Where wiring is run below ceilings or in equipment rooms.

N. Low voltage wiring may be run exposed **ONLY** above accessible lay-in ceilings. Wiring shall be run neatly; perpendicular to walls; away from piping, ductwork, or other construction likely to damage the insulation; and securely clipped or fastened directly to the building structure or supported with bridle rings.

O. All wiring and cables installed in air handling plenums either shall be UL 910-listed, Teflon-coated, with plenum rated ties, or shall be run entirely in conduit.

P. Wiring installation shall be acceptable to the Code Authority having Jurisdiction.

END OF SECTION 26 05 19

# SECTION 26 05 26

# GROUNDING AND BONDING FOR ELECTRICAL SYSTEMS

## PART 1 GENERAL

### 1.01 DESCRIPTION

A. Extend existing grounding system to new addition.

### 1.02 QUALITY ASSURANCE

A. Standard: National Fire Protection Association (NFPA): 2011 NFPA 70, "National Electrical Code® (NEC)," Article 250.

### 1.03 GROUNDING ELECTRODES

A. All connections to steel shall be ERICO "Cadweld," Burndy "Thermoweld," or Harger "Ultraweld."

B. Exothermic connections to columns shall be made on the web of the column.

### 1.04 GROUNDING CONNECTORS

A. Conduits entering a panelboard or similar enclosure through concrete, or requiring a ground bond, shall be bonded with the use of O-Z Gedney Type "BLG" bonding bushings and the same size conductor as the equipment grounding conductor.

B. All other connections to pipes or conduits shall be made by the use of one of the following clamps:
   1. Burndy "GAR" Type.
   2. Penn-Union "GPL" Type.
   3. O-Z Gedney "ABG" or "CG" Type.
   4. Anderson GC-111 Type.

### 1.05 CONDUIT AND RACEWAY SYSTEM GROUNDING

A. The entire metallic conduit system shall be electrically continuous with locknuts cutting through paint on enclosures. Where reducing washers are used and where concentric or eccentric knockouts are not completely removed, bonding bushings shall be required.

### 1.06 EQUIPMENT GROUNDING CONDUCTOR

A. An equipment grounding conductor (green ground wire) shall be included with all circuit conductors over 100 volts. Size in accordance with 2011 NEC Table 250.122, except not smaller than #12 AWG for power and lighting circuits and #14 AWG for control circuits.

## 1.07 WIRED GROUND CONNECTIONS

A. Because the conduit system can provide a lower impedance path than the wired equipment grounding system, the wired equipment grounding system shall connect to the metallic conduit ground system in **EVERY** accessible panel, junction box, pullbox, fixture housing, motor terminal box, and other metallic enclosures, as follows:

1. New panelboards shall have a ground assembly that has the same number, size, and type of anti-turn solderless lugs that the neutral assembly has. This grounding assembly shall be factory-bonded to the panel tub and shall have the screwdriver slots facing the front of the panel.
2. Junction and pullboxes shall be bonded by the use of grounding screws or lugs listed by Underwriters Laboratories, Inc. (UL). If there are more than (4) ground wires entering a box, a ground assembly of the same type used for panelboards shall be bonded securely to the enclosure. Note that 2011 NEC requires that an equipment grounding conductor passing through any accessible location be bonded to that enclosure. Self-tapping sheet-metal screws are not permitted.
3. In enclosures not requiring a ground assembly, all ground conductors entering an enclosure shall be connected together and a pigtail the size of the largest conductor shall be bonded to the enclosure with an attachment used for no other purpose.
4. General-use outlet boxes shall be bonded by the use of a ground screw in the threaded ground tap.
5. Motor terminal boxes shall be grounded by the use of a ground lug supplied by the Manufacturer or by drilling and tapping a hole for a ground screw. Remove paint prior to making the connection.
6. Lighting fixtures shall be grounded by the use of a pigtail fastened on bare metal that is free of paint.
7. Use equipment grounding conductors on all convenience outlets. Outlet box attachment screws shall not be used as a ground.
8. In any enclosure that has a grounding assembly, all ground wires shall be connected to the assembly. Provide connection lugs or terminals for the ultimate number of wires to be connected to the assembly. Use a separate connection for each wire.
9. Paint and any other foreign material shall be removed from ground connections so that the connection is metal-to-metal.

## 1.08 EXPOSED METALLIC PROJECTIONS

A. Ground the following items:

1. Rooftop HVAC units.
2. Exposed exterior metal piping.

END OF SECTION 26 05 26

# SECTION 26 05 29

# HANGERS AND SUPPORTS FOR ELECTRICAL SYSTEMS

## PART 1 GENERAL

### 1.01 RELATED DOCUMENTS

A. Division 03, “Concrete.”

### 1.02 DESCRIPTION

A. Provide all structural supports between building structural members to support major electrical equipment, including light fixtures, etc.

B. Attach all items of equipment securely to structure, floor, or concrete pad.

C. Provide support steel, attached to building structure, as necessary, to support conduit and smaller electrical equipment items. Provide supports between structural members, such as steel angles, channels, strut channels, etc., as required, except where specifically called out to be provided by the General Trades Contractor. Obtain prior written approval of the Architect.

D. Refer to Structural and Architectural Drawings and Specifications to determine what supports are provided by the General Trades Contractor.

E. For any variation in supports needed for equipment actually purchased, Contractor shall bear all costs of modifications, including redesign costs.

F. Provide angles, clips, mechanical fasteners, reinforcement steel, drilling of structure, etc., as needed. Means of attachment shall be approved by the Architect and shall not degrade the structure.

G. Provide hangers and supports required for conduit and equipment installed under the Electrical Contract.

H. Provide all necessary inserts, expansion shields, beam clamps, conduit floor supports, and auxiliary steel.

I. Provide conduit supports for conduit installed on the roof.

J. Inserts in Masonry Construction with Voids: Install appropriately sized all-thread rods within a 2-component polyester resin adhesive used in conjunction with a galvanized metal screen. Install rods in holes drilled with carbide-tipped drill bits.

### 1.03 QUALITY ASSURANCE

A. Standards:
   1. American National Standards Institute (ANSI).
   2. American Society for Testing and Materials (ASTM).
   3. American Society of Mechanical Engineers (ASME).
   4. Factory Mutual Global (FMG).

5. National Fire Protection Association (NFPA).
6. Underwriters Laboratories, Inc. (UL).

B. Components shall be selected and matched to the load imposed on them.

## PART 2 PRODUCTS

### 2.01 STRUCTURAL STEEL

A. Provide ASTM A36 / ASTM A36M, black and galvanized, steel plates and bars, strut channels, standard-weight black steel pipe, or steel angle of adequate size and strength to safely carry the weight of equipment item.

### 2.02 FINISH

A. Unless otherwise noted, all steel hangers and supports shall be standard black.
   1. **Exception:** Hangers and supports for exposed exterior applications shall be galvanized.

## PART 3 EXECUTION

### 3.01 INSTALLATION — CONDUIT HANGERS AND SUPPORTS

A. Install all necessary conduit hangers, supports, clamps, wall brackets, and attachments as required to properly support conduit from building structure.

B. Install hangers and supports with all necessary inserts, bolts, rods, nuts, washers, and other accessories, according to Manufacturer's recommendations. Hangers shall be double-nutted.

C. **DO NOT USE POWDER-ACTUATED ANCHORS OR FASTENERS.**

D. **DO NOT USE C-CLAMPS WITHOUT RETAINING CLIPS.**

E. Use a separate hanger for each conduit. Do not hang one conduit from another.

F. Provide additional supports as necessary to maintain conduit alignment.

G. Provide proper angles or channels between structural members for hanger supports where necessary. Weld to steel structural members where noted. Consult with the Architect regarding this procedure.

H. Do not support hangers from roof deck or floor above. Span from structural members with supplementary steel where direct attachment to structural members is not practical.

I. Ceilings:
   1. Do not support conduit from ceiling and ceiling grid systems.
   2. Conduit, and each ceiling and ceiling grid system, shall be a separate installation. Independently support each from the building structure.
   3. Where interferences occur, in order to support conduit, install trapeze-type hangers or supports. Locate them where they do not interfere

with access to fire dampers, valves, and other electrical equipment items.

4. Install additional ceiling hangers where the ceiling supports electrical equipment, such as lighting fixtures, etc., as required, to prevent the ceiling from sagging.

J. Use top flange beam clamps to avoid burning metal deck.

K. Re-Use of Existing Hangers:
   1. At the Contractor's option, conduit hangers may be reused; however, all components shall meet the same requirements as specified for new hangers.
   2. Test existing hangers before re-use; hangers shall withstand a drop test using a 25 lb. weight dropped from 2 ft.

L. Painting, Touch-up:
   1. Paint exposed areas immediately after erecting hangers and supports.
   2. Use same paint materials as used for shop painting.
   3. Apply paint by brush or spray to provide a minimum dry film thickness of 2.0 mils.

END OF SECTION 26 05 29

# SECTION 26 05 33

# RACEWAY AND BOXES FOR ELECTRICAL SYSTEMS

## PART 1 GENERAL

### 1.01 RELATED DOCUMENTS

A. Section 26 05 19, “Low-Voltage Electrical Power Conductors and Cables.”

B. Section 26 27 26, “Wiring Devices.”

### 1.02 DESCRIPTION

A. Provide boxes for devices, lighting fixtures, motors and equipment connections, system equipment connections, and special outlets. Provide pullboxes where more than (2) 90 deg. bends are required or if conductors are pulled further than 100 ft.

B. Unless otherwise noted, all conductors shall be enclosed in a continuous, grounded, steel conduit or raceway.

C. The conduit system shall be made mechanically tight and electrically continuous throughout.

D. Use galvanized steel conduit.
   1. **Exception:** Conduit exposed on the building outside shall be painted rigid steel.

E. Minimum Size: 1/2 in. for control and low voltage wiring only; 3/4 in. for line voltage wiring; except as otherwise indicated.

### 1.03 QUALITY ASSURANCE

A. Standards:
   1. Underwriters Laboratories, Inc., (UL) Label.
   2. American National Standards Institute (ANSI) C80 Specification.
   3. National Electrical Manufacturers Association (NEMA).
   4. National Fire Protection Association (NFPA): 2011 NFPA 70, “National Electrical Code® (NEC).”

## PART 2 PRODUCTS

### 2.01 BOXES

A. All outlet boxes shall be galvanized pressed steel of standard knockout type. Covers shall be secured with screws.

B. Lighting outlet boxes shall be standard 4 in. octagonal, 1-1/2 in. minimum deep boxes with 3/8 in. fixture-mounting stud. Outlet boxes having more than (2) conduits, or when 3/4 in. conduit is used, shall be standard 4 in. square boxes 1-1/2 in. deep or deeper as might be required to accommodate the wiring contained therein.

C. Flush device boxes in masonry walls shall be masonry boxes designed for the purpose, or 4 in. square boxes with raised covers designed for masonry.

D. Wiring device boxes for surface conduit work and those located in potentially damp areas shall be FS Series cast boxes. Exterior exposed boxes shall be weatherproof or airtight with gaskets.

E. Flush device boxes in plaster or drywall construction shall be 4 in. square, 2-1/8 in. deep boxes or gangable 2-1/2 in. deep boxes. Shallow 1-1/2 in. deep gangable boxes may be used only in other walls too thin for standard depth boxes.

F. Boxes shall be large enough to accommodate the size and number of conduits secured thereto and the size and number of wiring conductors. Refer to 2011 NEC Article 314 for sizing requirements.

G. All fittings, covers, and hardware shall be galvanized steel.

H. Boxes shall be NEMA type approved for the prevailing environmental conditions.

I. Acceptable Manufacturers: Appleton, Raco, Steel City, Thomas & Betts, National Electric, or Crouse-Hinds.

## 2.02 CONDUIT SYSTEMS

A. Use electrical metallic tubing, intermediate metal conduit, or rigid steel conduit, as specified below:
   1. Threaded rigid or intermediate conduit is required where conduit is **ANY** of the following:
      a. 2-1/2 in. or larger.
      b. Exposed to physical damage.
      c. Exposed within 8 ft. of finished floor.
      d. Run in exterior walls.
   2. Steel thin-wall EMT up through 2 in. diameter may be used elsewhere in interior construction, where rigid or intermediate is not otherwise required.
   3. Do **NOT** install conduits under slab unless specifically noted otherwise.
   4. Acceptable Steel/Aluminum Conduit Manufacturers: Allied, Steel Duct, Omega, Westerntube, or LTV.

B. Flexible Steel Conduit: Final connections to motors and equipment subject to vibration or moisture shall be made with 3/4 in. flexible steel conduit, 18 in. to 24 in. long, with PVC jacket, and containing copper phase and ground conductors. Connections between recessed lighting fixtures and junction boxes may be installed using 1/2 in. flexible steel conduit not over 72 in. long.

## 2.03 STEEL CONDUIT FITTINGS

A. Rigid or intermediate conduit fittings shall be threaded. EMT conduit fittings shall be set screw or compression type. Conduit bodies shall be malleable iron, threaded for heavy wall conduit and compression type for EMT, with

cadmium finish and cadmium-plated sheet steel covers. Provide neoprene cover gaskets for conduit body covers exposed to the weather.

B. Aluminum fittings shall not be used with steel conduit.

C. All materials in raceway system shall be compatible.

## 2.04 LIQUID-TIGHT FLEXIBLE METAL CONDUIT (LTFMC)

A. LTFMC may be used in short lengths to provide some vibration isolation. Contractor may use 1/2 in. LTFMC in short lengths (5 ft. maximum) to match equipment hubs on such items as motors, damper operators, limit switches, and similar controls where it is impractical to use 3/4 in. fittings.

B. Acceptable Conduit Manufacturers: Anaconda, Carol Cable, Eastern Wire and Conduit, Flexi-Guard, Inc., or International Metal Hose.

C. Acceptable Fittings Manufacturers: Appleton, O-Z Gedney, or Thomas & Betts.

## 2.05 BRIDLE RINGS

A. Provide steel bridle rings for supporting low voltage cable above accessible ceilings.

## 2.06 ROOFTOP CONDUIT SUPPORTS

A. Provide U.V.-rated, polyethylene foam supports for rooftop conduits.

B. Acceptable Manufacturer: Erico “Pipe Pier,” Pate, or B-Line Systems.

# PART 3 EXECUTION

## 3.01 INSTALLATION — ELECTRICAL BOXES

A. Rigidly support all boxes from building structure independent of the conduit supports. Screw boxes to studs; no “caddy clips” will be permitted. Boxes cast into masonry considered to be rigidly supported.

B. Flush boxes shall finish within 1/4 in. of surface of non-combustible materials. Boxes shall not project beyond finished surfaces.

C. Flush-mounted fixtures in ceilings shall have branch circuit conduit terminated in a junction box above ceiling, but accessible through ceiling opening, and located at least 1 ft. away from the fixture. Use 3/8 in. flexible steel conduit connection between junction box and fixture housing. Pre-wired lighting fixtures may have the branch circuit conduit terminate in the fixture junction box, provided the box is sized sufficient for the wire and UL-labeled for 75 deg. C wire.

D. Install boxes in masonry walls with the top or bottom of the box at the nearest block joint.

E. Do not install flush device and outlet boxes in walls back-to-back. Offset for sound isolation.

F. Paint all junction boxes containing emergency power wiring orange.

G. Paint all junction boxes containing fire alarm wiring red.

## 3.02 INSTALLATION — CONDUIT AND RACEWAY

A. Square cut, ream, and file all conduit ends. Cut at least (5) threads and draw up tight.

B. Clean and cap all empty conduits.

C. **CONCEAL ALL CONDUITS BY RUNNING IN CORE OF BLOCK WALLS, AND IN STUD WALLS AND CHASES, OR BY ROUTING OVER A LONGER DISTANCE AS REQUIRED.**

D. **EXPOSED CONDUIT WILL BE PERMITTED ONLY IN ELECTRIC AND MECHANICAL ROOMS AND OVERHEAD IN AREAS WITHOUT DROPPED CEILINGS.**

E. Adequately support conduit from substantial structural elements of the building, such as beams, joists, and columns, using suitable straps, clamps, and hangers. Conduit shall neither rest on, nor be supported from, piping, ductwork, or suspended ceilings.

F. Run all conduits perpendicular to walls and parallel to floors and ceilings. Secure conduits every 10 ft. and within 3 ft. of every bend, box, fitting, or coupling.

G. **DO NOT RUN CONDUIT EXPOSED ACROSS FLOORS.**

H. Drop conduits down inside concrete block walls. Do not install conduit in insulation space.

I. Lay out conduit system to avoid crossing building expansion joints insofar as possible. Where crossings of expansion joints are necessary, use O-Z Gedney Type “AX” or “TX,” Thomas & Betts, or Roxtec expansion fittings with grounding continuity.

J. Do not use field-fabricated bends containing indentations or elliptical cross-sections. All conduit bends shall be done with an approved bending device. No more than (3) 90 deg. bends will be allowed in any conduit run. Install pullboxes at 100 ft. on center or where more bends are required.

K. Install insulated bushings and throat fittings on all conduit ends.
   1. Bushings smaller than 1-1/2 in.: Use all metal with formed radius to prevent insulation damage.
   2. Bushings 1-1/2 in. and larger: Use insulating type constructed of metal insert and bakelite plastic, molded to the metal insert.
   3. Acceptable Manufacturers: O-Z Gedney, Thomas & Betts, or Appleton.

L. The use of running threads, either concealed or exposed, is prohibited. Use split coupling equal to O-Z Gedney Type SP, Thomas & Betts, or Erickson.

M. All threaded conduits entering panelboards, pullboxes, or outlet boxes shall be secured by galvanized locknuts (inside and outside) and insulated bushings.

N. Install and identify nylon pull line or #16 galvanized iron wire in all empty conduits.

O. Before pulling conductors, all conduits shall be continuous from outlet to outlet and shall be installed complete. Swab conduits free of all dirt, grease, and moisture before pulling conductors.

P. Roof penetrations: Seal all conduit penetrations through roof. Roof integrity and warranty shall be preserved. Coordinate with the General Trades Contractor **BEFORE** cutting.

Q. Do **NOT** run conduits under slab unless specifically noted otherwise.

## 3.03 INSTALLATION — LIQUID-TIGHT FLEXIBLE METAL CONDUIT (LTFMC)

A. Provide LTFMC for the following: From motor disconnect switch to motor.

B. Install a wired equipment grounding conductor with appropriate terminations in all LTFMC. Grounding wire shall be sized in accordance with 2011 NEC Article 250, except #12 AWG Cu shall be the smallest size ground wire permitted. Drill and tap a hole in motor pigtail box and other enclosures if a suitable ground lug attachment means is not provided. Spring steel box grounding clips are **NOT** acceptable attachments.

END OF SECTION 26 05 33

# SECTION 26 05 53

# IDENTIFICATION FOR ELECTRICAL SYSTEMS

## PART 1 GENERAL

### 1.01 DESCRIPTION

A. Identify each piece of electrical equipment, such as disconnects and auxiliary systems, on the front cover or trim with its designated name or number/letter shown on the Drawings and with the voltage available within the panel and the source from where it is fed. Identify panelboards in finished areas on the inside cover.

B. Install nameplates for equipment. Identification shall be as indicated on the following examples:

RTU-1
480/3

## PART 2 PRODUCTS

### 2.01 NAMEPLATES

A. Laminated plastic nameplates, sized for minimum 1/4 in. high white letters or numbers engraved into a black background, Gothic style.

B. Acceptable Manufacturers: Seton “Setmark” or approved equal by Brady, MSI, or Calpico.

C. “Dymo” or similar tape type labels shall **NOT** be used.

## PART 3 EXECUTION

### 3.01 COORDINATION

A. Coordinate to ensure that the identification used by all Trades is uniform in type, style, and appearance.

B. Coordinate the exact nomenclature to be used on equipment nameplates with the Construction Manager and Architect.

C. Coordinate with the Construction Manager to match existing equipment identification.

### 3.02 INSTALLATION

A. Attach nameplates with stainless steel screws. **Exception:** Use compatible adhesive where screws might damage equipment.

END OF SECTION 26 05 53

# SECTION 26 05 60

# REQUIREMENTS FOR COMPLETION OF ELECTRICAL WORK

## PART 1 GENERAL

### 1.01 RELATED DOCUMENTS

A. Section 01 77 00, “Closeout Procedures.”

B. Section 26 05 00, “Common Work Results for Electrical.”

C. Section 26 05 05, “Electrical Excavation and Backfill.”

D. Section 26 05 06, “Electrical Submittals.”

E. Section 26 05 07, “Electrical Operating and Maintenance Manuals.”

F. Section 26 05 53, “Identification for Electrical Systems.”

G. Section 26 05 93, “Testing, Adjusting, and Balancing for Electrical.”

### 1.02 DESCRIPTION

A. Complete and submit the following list, which is a partial list of the items required prior to Contract Completion:
   1. Submittals. Refer to Section 26 05 06.
   2. Operational tests, adjustments, and inspections of all equipment and systems, and report of final test of all special systems, as required in this, as well as other, Sections. Refer to Section 26 05 93.
   3. Final report of electrical load balance, as required in Section 26 05 93.
   4. All required certifications and labels, as required in Section 26 05 06 and Section 26 05 93, as well as other Sections.
   5. Protection and cleaning. Refer to Section 26 05 00.
   6. Operating and Maintenance Manuals. Refer to Section 26 05 07.
   7. Record Drawings. Refer to Section 26 05 00.
   8. Painting. Refer to Section 26 05 00.
   9. Equipment warranties.
   10. Guarantee. Refer to Section 26 05 00.
   11. Equipment identification. Refer to Section 26 05 53.
   12. Instruction of the Owner’s personnel as required in this, as well as other, Sections.
   13. Spare parts as required in this, as well as other, Sections.

B. Provide or perform all of the above items before Contract Completion.

## PART 2 PRODUCTS

### 2.01 SPARE PARTS

A. Provide a receipt, signed by the Owner, for all spare parts and insert it in the Operating and Maintenance Manuals.

B. Furnish (1) complete set of the following spare parts for the Owner's use after the guarantee period expires:
   1. Spare occupancy sensors. (Quantity [1].)
   2. Spare fuses for each size and type of fuse used, and fuse pullers. (Quantity [3].)
   3. Spare lighting fixture ballasts. (Quantity 5%, [3] minimum per type.)
   4. Spare lamps of each type specified for the Owner's inventory. Refer to Lighting Fixture Schedule on Drawings. (Quantity 10%, [1] minimum.)
   5. Division 28, "Electronic Safety and Security":
      a. Spare fire alarm pull stations. (Quantity [1].)
      b. Spare Xenon flashers. (Quantity [1].)
      c. Spare fire alarm monitor modules. (Quantity [1].)
      d. Spare fire alarm audio/visual alarm horn/strobes and visual alarm strobes. (Quantity [1].)
   6. Any other parts mentioned elsewhere.

C. Replace all inoperative lamps and ballasts. Replace noisy ballasts.

## PART 3 EXECUTION

### 3.01 FINAL OPERATING TESTS AND PROCEDURES

A. Prior to Contract completion, conduct system operational tests for a period of at least (5) days, not necessarily consecutive, as scheduled by the Construction Manager, to demonstrate fulfillment of the requirements of the Contract. During this time, adjust equipment so that it will perform as the Manufacturer intended and so that systems will function as designed.

B. Operate each system in every mode of operation, and check the position of switches and other devices for proper closure, operation, and switching.

C. Refer to Section 26 05 93 for additional information.

### 3.02 INSTRUCTION OF OWNER'S PERSONNEL

A. Provide in-service training for the system's operators, including the following:
   1. Classroom lighting system: Minimum of (1) hour training.
   2. Room occupancy sensors: Minimum of (1) hour training.

B. Provide all applicable user manuals and related training documentation.

C. Provide training schedule and training outline for approval (45) days prior to Contract Completion.

D. After all system operational tests have been completed, schedule an instruction period with the Construction Manager. Schedule well in advance, so that all of the Owner's personnel may attend if they desire. Coordinate with the Construction Manager and Architect for date and time of training sessions.

E. Participate in training sessions. Instruct the Owner's personnel in the operation and maintenance of all systems and equipment. Use Operating and Maintenance Manuals to familiarize the Owner's personnel with equipment and procedures. Allow time as necessary for this instruction.

F. Record a video of all Owner training, instructions, and equipment start-up demonstrations on a digital video disc (DVD). Turn over a copy of the DVD to the Construction Manager.

G. Instruction shall include the following:
   1. Location of equipment and explanation of what it does (function).
   2. Reference to operating instruction manuals for record and clarity.
   3. Coordination of written and verbal instructions, so that the operation of each system is fully understood by operating personnel.
   4. Complete review of items contained in Operating and Maintenance Manuals.
   5. Discussion of maintenance procedures that must be followed by the Owner.
   6. Complete demonstration and explanation of each System.

H. Provide a copy of OFCC Form No. F390-03, "Certification of Equipment Demonstration," signed by the Construction Manager, to the Architect. Insert copies in each Operating and Maintenance Manual.

## 3.03 FOLLOW-UP INSPECTIONS

A. Make an inspection within (90) days after occupancy of the building to make minor adjustments as needed to ensure that all equipment is operating properly and that satisfactory conditions are being maintained throughout, and to satisfy any unusual conditions. Schedule with the Architect. Consult with the Construction Manager.

B. A minimum of (1) month before the end of the guarantee period, contact the Owner and Architect to discuss system operation, and to plan for the future care and maintenance of the system.

C. (1) month before the end of the guarantee period, contact the Owner and perform an inspection to review any items needing correction.

D. Refer to Section 26 05 93 for additional information.

E. Refer to Section 26 05 05 for additional inspection requirements related to excavation and backfill.

## 3.04 PUNCH LIST PROCEDURE

A. Refer to Section 01 77 00.

END OF SECTION 26 05 60

# SECTION 26 05 93

# TESTING, ADJUSTING, AND BALANCING FOR ELECTRICAL

## PART 1 GENERAL

### 1.01 RELATED DOCUMENTS

A. Section 26 05 60, “Requirements for Completion of Electrical Work.”

### 1.02 DESCRIPTION

A. Conduct such tests and adjustments of equipment as required by the Architect or as necessary to verify performance requirements. Submit data taken during such tests to the Architect.

B. Contractor shall pay all professional engineering fees involved in required testing of equipment.

C. Perform a megger test at 1,000 volts on all 600 volt insulation rated power conductors.

D. Upon completion of electrical work, test the full load phase balance of the electrical system serving the new addition area. Tests shall be witnessed by the Architect’s Representative, and these results shall be recorded and reported to the Architect in writing.

E. Optimum phase balance under full load condition shall be obtained by reconnection of existing panelboard branch circuits. Any existing panelboard requiring circuit changes for load balance shall have properly revised changes made in its panel directory.

F. Verify proper rotation of motors during load balance and final adjustments.

G. Test lines before covering.

H. Demonstrate to the Construction Manager that all electrical systems are operating properly. Make available to the Construction Manager, upon request, the following information:
   1. Branch wiring megger tests.
   2. Grounding resistance measurements.
   3. Load balance.
   4. Special System tests.

### 1.03 QUALITY ASSURANCE

A. Standard: National Fire Protection Association (NFPA): 2005 NFPA 110, “Standard for Emergency and Standby Power Systems.”

### 1.04 ENERGIZATION OF POWER TO EQUIPMENT ITEMS

A. Coordinate application of power to each equipment item with the Contractor supplying that item.

B. Power may be applied briefly to check direction of motor rotation; however, the equipment item shall **NOT** be powered up unless the Contractor responsible for the equipment item is present during start-up.

## 1.05 FINAL OPERATING TESTS AND PROCEDURES

A. Check breakers and switches for proper operation.

B. Test operation of all GFI receptacles.

C. Check polarity of all receptacles.

D. Test continuity of conduit system.

E. Test insulation leakage and impedances.

F. Test ground system resistance.

G. Check and verify that overcurrent protection is adequate for each load being served.

H. Check motors for proper rotation and operating temperature.

I. Test all lighting control and classroom lighting systems.

J. Test proper operation of lights and equipment.

K. Test operation of exterior lighting system.

L. Replace all inoperative lamps and ballasts. Replace noisy ballasts.

M. Test **ALL** new fire alarm system devices. System operation shall be witnessed and approved by the State Fire Marshal or Local Fire Official.

N. Test any Special System tests described in other Sections of these Specifications.

O. Remove panel covers and clean inside of all panels. Provide typewritten circuit directory.

P. Refer to Section 26 05 60 for additional information.

## 1.06 CERTIFICATE

A. Furnish approved Certificate of Final Inspection.

END OF SECTION 26 05 93

# SECTION 26 08 00

# COMMISSIONING OF ELECTRICAL

## PART 1 GENERAL

### 1.01 RELATED DOCUMENTS

A. Section 01 91 00, “Commissioning.”

B. Section 01 91 51, “Mechanical/Electrical Systems Manual.”

### 1.02 DESCRIPTION

A. This section describes the process for commissioning of the various building systems and outlines the duties of parties involved.

B. The commissioning process may be applied to all equipment, components, and systems to be commissioned as listed in Part 3 of this Section, including specified interfaces to and from equipment and systems provided under the other Divisions of this Specification.

### 1.03 CONTRACTORS

A. The appropriate Contractors shall cooperate and coordinate their work during the commissioning process. They shall perform all work required for the installation of the components and systems, and for operation during the commissioning process. They shall furnish all necessary resources to accomplish the installation and the commissioning.

### 1.04 COMMISSIONING AGENT

A. The Commissioning Authority (CxA) is independently retained by the Owner, and shall have the authority to grant final acceptance of each system commissioned.

### 1.05 COMMISSIONING DOCUMENTATION

A. Commissioning Plan: CxA shall create a plan during the design phase of the project to identify scope of commissioning for the project and a preliminary schedule of activities for use during the project by members of the Commissioning Team.

B. Meeting Minutes: CxA shall generate and issue to members of the Commissioning Team after each commissioning progress meeting.

C. Design Phase: CxA shall review electrical drawings at Design Development and Construction Document Phases, shall recommend improvements to correct deficiencies in design, and shall specifically focus on electrical controls.

D. Construction Checklists: CxA shall provide a list of items to inspect for each piece of equipment that is to be commissioned. Contractor shall complete checklist prior to equipment start-up and functional testing.

E. Start-up Plan: Contractor shall submit to identify methods to be used for equipment pre-checks, start-up procedures, start-up schedule, and sample reports to document completion. Contractor shall document all equipment deficiencies and corrections made in the field as part of start-up report.

F. Test Reports: Contractor shall generate reports to document system/equipment testing included in the Contract that is not dictated by the CxA (i.e., generator start-up, etc.). Review As-Built Drawings.

G. Commissioning Issues Log: CxA shall update and issue log to identify system deficiencies found through the commissioning process.

H. Functional Tests: CxA shall create, and the Contractors shall review, for use during functional testing of each system.

I. Training Plan: Contractor shall submit plan identifying personnel providing training and their qualifications, training supplemental materials, and training session agendas, for review by the CxA.

J. Final Commissioning Report: CxA shall provide report summarizing results, status of remaining operating deficiencies, and future actions and nonactions.

K. Commissioning Complete: Formal Commissioning Project Complete document with signoff to add finality to project.

## PART 2 PRODUCTS

### 2.01 TESTING EQUIPMENT AND INSTRUMENTATION

A. Contractor shall provide all industry standard test equipment required for performing the specified tests. Any proprietary vendor-specific test equipment shall be provided by that Vendor or Manufacturer.

B. Contractor's instrumentation shall be of sufficient quality and accuracy to test and measure system performance within the tolerances required. Instrumentation shall be calibrated at the Manufacturer's recommendation intervals with calibration tags permanently affixed to the instrument. Instrumentation shall be maintained in good repair and operating condition throughout the duration of use on this project and shall be immediately re-calibrated or repaired if dropped or damaged in any way during use on the project.

## PART 3 EXECUTION

### 3.01 THE COMMISSIONING TEAM

A. In addition to the CxA, the Commissioning Team shall consist of:
   1. Owner.
   2. HVAC Contractor.
   3. Electrical Contractor.
   4. Test and Balance Subcontractor.

5. Temperature Controls Subcontractor.
6. Mechanical Design Engineer.

## 3.02 COMMISSIONING RESPONSIBILITIES

A. Within (30) days of the award of Contract, the Contractor shall submit the names of all the Trades people who will be part of the commissioning process. Contractor, and all its Sub-Trades and Suppliers, shall cooperate with the CxA in the commissioning process. Contractor's responsibilities shall include:
   1. Review the project schedule and identify the milestone commissioning activities at the initial commissioning scope meeting, to be held within (90) days of contract award. Milestone commissioning activities shall include, but are not limited to:
      a. Equipment start-ups.
      b. System start-ups.
      c. Testing activities performed by the Contractor.
      d. Readiness of each major system.
      e. System functional testing as part of the commissioning process.
   2. Attend commissioning meetings, and complete action items arising from them, as required to allow the commissioning process to proceed on schedule.
   3. Complete and provide all system readiness documentation required by the commissioning process.
   4. Provide a start-up plan for each piece of equipment and system that is identified to be commissioned. Notify the CxA a minimum of (7) calendar days before start-up of major equipment and systems.
   5. Provide personnel and testing instrumentation required to operate and test equipment and systems as part of functional performance testing. Testing may include calibration verification of system devices. Testing shall take place under the direct supervision of the CxA. Contractor shall reimburse the Owner and CxA for costs associated with retesting of systems that fail initial testing.
   6. Contractor shall respond in writing to the CxA and Owner at least as often as commissioning meetings are being scheduled concerning the status of each apparent outstanding discrepancy identified during commissioning. Discussion shall cover explanations of any disagreements and proposals for their resolution. Contractor shall not consider any required re-testing a justified reason for a claim of delay or for a time extension.

## 3.03 COMMISSIONING PROCESS

A. The commissioning process depends upon proper coordination between all Commissioning Team members, strict adherence to schedule, and completion of all required documentation. Responsibilities of each team member are described in this and other sections of the contract.

B. Construction Phase:

1. Commissioning Meetings: An initial Commissioning Scope Review / kick-off meeting will be held with all members of the Commissioning Team at the beginning of the project (generally within (90) days of award of contract). CxA will schedule periodic Commissioning Team progress meetings to review progress of commissioning work and coordinate activities. (Commissioning progress meetings will be scheduled to coincide immediately before or after the regular weekly construction progress meeting.) Contractor shall anticipate at least (1) commissioning meeting for every month of the construction phase (additional meetings as required will not be considered additional work to this contract).
2. Commissioning Schedule: Contractor shall assist the CxA in the development of a written schedule that integrates the commissioning activities into the construction schedule specified in Division 01, "General Requirements." Update of the commissioning schedule to reflect changes in the work will be done as necessary. The commissioning schedule shall include at least the following dates:
   a. Submission of Operation and Maintenance information for systems to be commissioned.
   b. Schedule for systems, subsystems, and equipment start-up, including services of Manufacturers' authorized service representatives, and performance of pretest checks.
   c. Schedule for functional performance testing, including seasonal testing.
   d. Schedule for the Owner's operating personnel training.
3. Prerequisite to Start-Up: Test and Balance report must be signed off by the CxA prior to final commissioning of the respective systems. CxA will verify the Testing and Balancing work in progress as necessary and correct. It is expected that all relevant and known punch-list items are addressed prior to that agenda commissioning activity.
4. Equipment and System Start-Up: Before any equipment or system is started, the Start-up Plan, including all pre-start check documentation provided by the Equipment Manufacturer and construction checklists provided by the CxA, shall be submitted. Contractor shall notify the CxA of the scheduled start-up a minimum of (7) days prior to the start-up, and give the CxA the opportunity to witness part or all of the start-up work and conduct its own pre-check inspection. After startup is completed, the Contractor shall submit a completed start-up report for each piece of equipment.
5. Initial Operation: Once the Contractor completes the start-up, testing, balancing, and calibration of all components and systems, it shall operate all systems through the specified modes of operation, and test the system responses to specified abnormal or emergency conditions. Contractor shall complete the system and perform this functional and

performance pre-check before the Commissioning Team performs the functional acceptance testing.

a. Functional acceptance testing included in the commissioning process is verification that the Contractor has provided a complete and functioning system per the Contract requirements. It is not an opportunity for the Contractor to determine deficiencies and work remaining.

b. Contractor shall ensure that a qualified technician(s) is available and present during the agreed-upon schedules and of sufficient duration to complete the necessary tasks, tests, adjustments, and problem resolution.

c. Functional testing of the system shall be terminated and re-scheduled if it is deemed by the CxA that the system is not ready for functional testing and that the Contractor has not fully completed the required initial operation pre-check. Contractor shall reimburse the Owner, CxA, Construction Manager, and Architect for costs associated with the additional time and resources required to reschedule and repeat testing due to a lack of system readiness by the Contractor.

C. Acceptance Phase:

1. Functional Acceptance Testing: Systems identified for commissioning shall be operated through the entire specified sequence of operations, as directed by the CxA for verifying acceptable operation. Contractor shall provide all testing instrumentation required and operate the system during the tests, and by this, the Contractor shall ensure that the systems are not operated beyond their limits as installed.

2. System Deficiencies: All system operational deficiencies identified during the functional acceptance testing will be recorded by the CxA for correction by the Contractor. Work to correct the deficiencies will be under the direction of the Owner, the Owner's Representative, or the Construction Manager. Final acceptance of the system shall not be granted until all deficiencies identified are corrected.

## 3.04 SYSTEMS/EQUIPMENT TO BE COMMISSIONED

A. The following electrical systems shall be commissioned:

1. Classroom lighting system.
2. Room occupancy sensors.

B. The equipment listed below shall be provided a formal start-up. (Refer to other Sections of the Project Specification for additional start-up requirements.)

1. Classroom lighting system.

END OF SECTION 26 08 00

# SECTION 26 09 00

# INSTRUMENTATION AND CONTROL FOR ELECTRICAL SYSTEMS

## PART 1 GENERAL

### 1.01 RELATED DOCUMENTS

A. Section 23 09 00, "Instrumentation and Control for HVAC (Electrical Coordination)."

B. Section 23 09 23, "Direct-Digital Control System for HVAC."

C. Section 23 09 93.05, "Sequence of Operations for HVAC Controls."

### 1.02 SCOPE

A. Provide all power, control, and interlock wiring and conduit, relays, control power transformers, auxiliary contacts, and fuses as required to provide complete and operating control systems for HVAC systems, and to effect the proper sequence of operation of each equipment subsystem.

B. Unless otherwise noted, provide all line voltage and low voltage wiring and conduit. **Exception:** Temperature Controls Contractor shall provide DDC wiring.

C. Temperature Controls Contractor shall provide relays, and wiring inside temperature control panels.

D. Systems shall be wired to perform the operation required in Section 23 09 23 and Section 23 09 93.05.

### 1.03 DESCRIPTION OF CONTROL WIRING REQUIREMENTS

A. HVAC Work:

1. <u>VRV heat pumps, branch selector boxes, and fan-coils</u>: Provide power wiring for indoor fan coil units, branch selector boxes, and heat pump units. Provide disconnect switch for each component.
2. <u>Heaters, cabinet unit</u>: Provide disconnect switch, control wiring, and power wiring.
3. <u>Rooftop unit (DOAS)</u>: Provide power wiring.
4. <u>Temperature control panel</u>: Provide 120 volt power.
5. <u>Thermostats</u>: Install thermostats. Provide rough-in boxes, control wiring, and conduit.

### 1.04 WIRING DIAGRAMS

A. HVAC and Temperature Controls Contractors shall provide a full set of detailed wiring diagrams for the use of the Electrical Contractor.

END OF SECTION 26 09 00

# SECTION 26 09 23

# LIGHTING CONTROL DEVICES

## PART 1 GENERAL

### 1.01 RELATED DOCUMENTS

A. Section 26 50 00, “Lighting.”

B. Section 26 55 51, “Classroom Lighting.”

### 1.02 DESCRIPTION

A. Provide the following lighting controls:
   1. Occupancy sensors, indoor, multi-technology passive infrared/ultrasonic.
   2. Controls for integrated classroom lighting system. Refer to Section 26 55 51.

### 1.03 QUALITY ASSURANCE

A. Standards:
   1. Underwriters Laboratories, Inc. (UL).
   2. National Electrical Manufacturers Association (NEMA).
   3. American Society of Heating, Refrigerating, and Air Conditioning Engineers (ASHRAE): ASHRAE/IESNA 90.1-2004, Section 9, “Lighting.”
   4. Illuminating Engineering Society of North America (IESNA).

## PART 2 PRODUCTS

### 2.01 OCCUPANCY SENSORS, INDOOR, MULTI-TECHNOLOGY PASSIVE INFRARED / ULTRASONIC

A. Wall-Mounted: Leviton Model 0SW12-MOW. UL-listed, self-contained, with (1) ultrasonic transmitter, (1) ultrasonic receiving transducer, sensitivity adjustment, adjustable 30-second to 30-minute time-delay OFF, power pack relay, 120 volts, and full 5-year warranty.

B. Other Acceptable Manufacturers: Approved equal by Hubbell Building Automation, Greengate, Sensor Switch, Lutron, or Watt Stopper.

## PART 3 EXECUTION

### 3.01 OCCUPANCY SENSORS

A. Mount sensors at locations shown on the Drawings and wire to area lights to turn lights ON automatically when someone enters the area and OFF automatically after the area has been unoccupied for the time delay set on the sensor. Coordinate installation location and orientation with other

Trades and Manufacturer installation instructions to ensure maximum coverage in room.

B. Adjust sensor sensitivity and time delay to prevent nuisance switching of the lights.

END OF SECTION 26 09 23

# SECTION 26 27 26

# WIRING DEVICES

## PART 1 GENERAL

### 1.01 DESCRIPTION

A. Provide wiring devices as indicated, including cover plates.

B. Provide brown devices and matching cover plates for devices located in paneled or dark-painted walls or surfaces.

C. Wiring devices shall be NEMA type approved for the environmental conditions prevailing.

D. Provide ground fault-interrupting (GFI) receptacles where required to comply with Code.

### 1.02 QUALITY ASSURANCE

A. Standards:
   1. National Electrical Manufacturers Association (NEMA).
   2. Underwriters Laboratories, Inc. (UL) Label.

### 1.03 EQUIPMENT TERMINATION

A. Prior to rough-in, verify termination requirements, including, but not limited to, plug-receptacle configuration.

## PART 2 PRODUCTS

### 2.01 SWITCHES

A. 20 amp, 120/277 volt, Construction/Heavy-Duty Specification Grade, back-wired and side-wired.

| DEVICE | HUBBELL CAT. NO. |
|---|---|
| Single-Pole | HBL1221-I |
| 3-Way | HBL1223-I |
| 3-Way, Key-Operated | HBL1223L |

B. Acceptable Manufacturers: Hubbell, Pass & Seymour, Cooper, Bryant, or Leviton.

### 2.02 RECEPTACLES

A. 125 volt, Construction/Heavy-Duty Specification Grade, 2-pole, 3-wire grounding, back-wired and side-wired.

| DEVICE | HUBBELL CAT. NO. (NEMA TYPE) |
|---|---|
| 20 Amp Duplex | HBL5362-I (NEMA 5-20R) |
| GFI Outlet | GF5362IA (NEMA 5-20R) |

Weatherproof (GFI) GFR5352IA (NEMA 5-20R)

B. Acceptable Manufacturers: Hubbell, Pass & Seymour, Cooper, Bryant, or Leviton.

## 2.03 PLATES

A. Plates for flush devices in interior partitions shall be Specification Grade stainless steel Type 302/304.

B. Plates for flush devices in concrete block walls shall be Specification Grade stainless steel Type 302/304 “Jumbo” plates.

C. Plates for devices in surface fittings shall be cadmium-plated steel surface covers. Covers shall fit without overlap and have round corners.

D. All metal plates shall be grounded.

E. Weatherproof plates for GFI duplex receptacles shall be Hubbell Cat. No. WP26M/MH single-gang, cast aluminum, gasketed with single latched lift cover suitable for GFI receptacle, and clearly marked “Suitable For Wet Locations While In Use” and “UL-listed.”

F. Acceptable Manufacturers: Hubbell, Pass & Seymour, Cooper, Bryant, or Leviton.

# PART 3 EXECUTION

## 3.01 COORDINATION

A. To ensure proper final connection, verify the NEMA receptacle configuration required with the Construction Manager or Equipment Supplier.

## 3.02 INSTALLATION

A. Install switches adjacent to strike side of door openings. Prior to roughing in, verify with the General Trades Contractor which side of the door opening is the strike side. Devices and cover plates shall be absolutely plumb and horizontal with no visible gaps around edge of plates. In masonry walls, install top or bottom of box at nearest block joint.

B. Check polarity of all receptacles.

C. Install cover plates on all devices.

D. Install galvanized, blank, screw, or hinge covers on all junction boxes.

E. Install gang plates on gang devices.

F. Connect green insulated ground wire to each device grounding terminal. Wire to panel ground bar.

G. All weatherproof outlets shall include GFI type receptacle.

H. Flush-mounted devices in walls shall not be installed back-to-back.

END OF SECTION 26 27 26

# SECTION 26 28 00

# LOW-VOLTAGE CIRCUIT PROTECTIVE DEVICES

## PART 1 GENERAL

### 1.01 RELATED DOCUMENTS

A. Section 26 05 60, “Requirements for Completion of Electrical Work.”

### 1.02 DESCRIPTION

A. Provide fused disconnect switches as shown on the Drawings, and as required by Code.

B. Fusible switches are indicated on Drawings with a subscript-indicated Buss fuse type/size.

C. Provide overcurrent protection for equipment and wiring as required by 2011 NEC Article 240.

D. Provide fuses for disconnect switches (where noted) and other circuits.

E. Provide branch circuit breakers for existing paneboards for equipment and wiring.

### 1.03 QUALITY ASSURANCE

A. Standards:
   1. American National Standards Institute (ANSI).
   2. National Electrical Manufacturers Association (NEMA).
   3. National Fire Protection Association (NFPA): 2011 NFPA 70, “National Electrical Code® (NEC).”
   4. Underwriters Laboratories, Inc., (UL).

### 1.04 RATINGS AND CAPACITIES

A. Refer to Drawings for ampacity, number of poles, NEMA type, and fuse type/size.

## PART 2 PRODUCTS

### 2.01 DISCONNECT SWITCHES

A. NEMA heavy-duty Type HD, steel enclosure, dual-cover interlocks, HP-rated plated contacts, indicating handle and provisions for padlocking. Switches shall be NEMA Type approved for the environmental conditions prevailing. Provide Class R rejection fuse clips.

B. Hubbell HP-rated manual switches or toggle-operated single-phase motor switches equal to Square D Class 2510 shall be acceptable for unfused loads less than 16 amps.

C. Switches shall comply with NEMA KS1-1975, UL 98, ANSI C33.64, and 2011 NEC.

D. Acceptable Manufacturers: Square D, Siemens, General Electric, or Cutler-Hammer/ Westinghouse.

## 2.02 SWITCH FUSES

A. Bussmann Type LPS-R, NEMA Class RK-1. 600 volt, 600 amps and below. Dual element, time delay, current-limiting, 200,000 amp. RMS symmetrical interrupting capacity, sizes as shown on the Drawings.

B. Switch fuses shall comply with NEMA KS1-1975, UL 98, ANSI C33.64, and 2011 NEC.

C. Acceptable Manufacturers: Bussmann, Ferraz-Shawmut, Edison, or Littlefuse.

## 2.03 PANELBOARD BRANCH CIRCUIT BREAKERS

A. Beechwood and Etna Elementary Schools:
   1. 120 volt circuit breakers: GE Type “THQB.”
   2. 208 volt circuit breakers: GE Type “THQB.”
   3. 277 volt circuit breakers: GE Type “TEY.”
   4. 480 volt circuit breakers: GE Type “TEY.”

B. Kae Elementary School:
   1. 120 volt circuit breakers: Eaton Type “BAB.”
   2. 208 volt circuit breakers: Eaton Type “BAB.”
   3. 277 volt circuit breakers: Eaton Type “GHB.”
   4. 480 volt circuit breakers: Eaton Type “GHB.”

# PART 3 EXECUTION

## 3.01 INSTALLATION — DISCONNECT SWITCHES

A. Locate disconnect switch to provide access and minimum 3 ft. clearance in front. Locate minimum 2 ft. above grade or roof.

B. Coordinate location with other Contractors.

## 3.02 INSTALLATION — FUSES

A. Coordinate fuse selection with the ampere draw and type of load being served.

B. Install fuse reducers in all existing or new fusible switches as required.

C. Provide (3) spare fuses for each size rating, fuse pullers, and a framed, typewritten list of fuse sizes. Install adjacent to switchboard; confirm location with the Construction Manager. Provide copy of list in the Operating and Maintenance Manuals.

END OF SECTION 26 28 00

# SECTION 26 29 13

# ENCLOSED CONTROLLERS

## PART 1 GENERAL

### 1.01 RELATED DOCUMENTS

A. Section 23 09 93, “Sequence of Operations for HVAC Controls.”

### 1.02 DESCRIPTION

A. Provide starters, motor contactors, enclosed relays, and control stations for all motors being automatically controlled.

B. Coordinate rough-in with the Contractor supplying equipment item. Wiring diagrams shall be furnished by the Contractor supplying the equipment.

C. Provide thermal overload protection for all motors. No thermal protection shall exceed 115% of motor nameplate amperes. Overloads shall be sized in accordance with motor nameplate rating and service factor.

D. Furnish minimum NEMA Size O starter. Furnish a magnetic starter or motor contactor for each motor that is automatically controlled or interlocked with another motor or device.

E. All 3-phase motor starters shall include overload protection for each phase and single-phase protection.

F. Provide motor short-circuit protection as required.

### 1.03 QUALITY ASSURANCE

A. Standards:
   1. National Fire Protection Association (NFPA): 2011 NFPA 70, “National Electrical Code® (NEC),” Article 430.
   2. Underwriters Laboratories, Inc., (UL) Label.
   3. National Electrical Manufacturers Association (NEMA).

## PART 2 PRODUCTS

### 2.01 MOTOR STARTERS

A. Manual motor starters (1/2 HP and smaller): Allen-Bradley Bulletin 600 or 609. Shall include toggle lever, neon pilot light, stainless steel cover and nameplate, and thermal overload relays in all legs. Shall be open construction for flush-mounting in switchbox.

B. Magnetic motor starters (3/4 HP and larger motors, or where required for interlocking or automatic control): Multi-pole, NEMA-rated contactors with overload relays, nameplate, pilot light, and reset in cover. Provide phase failure relay with time delay. Provide 120 volt control power transformer, HAND/OFF/AUTO selector switch, where indicated.
   1. Control circuit voltage shall be 120 volts provided by control circuit transformer. Fuse each side of primary and (1) side of secondary with current-limiting fuses.
   2. Include at least (1) spare set of N.O. auxiliary contacts. Provide additional contacts as required to interlock and control fans and equipment.
   3. 3-phase magnetic motor starter: Allen-Bradley Bulletin 509 or 512 (combination starter-disconnect).
   4. Combination starters shall include a Class R fused disconnect switch.
   5. Provide NEMA Type enclosure as required for the environment within which it is located.

C. Acceptable Manufacturers: Allen-Bradley or approved equal by Square D, Siemens, General Electric, or Cutler-Hammer/Westinghouse.

## 2.02 MOTOR CONTACTORS / ENCLOSED RELAYS

A. For single-phase motors 1 HP and smaller, where required for interlocking or automatic control: Functional Devices, Inc., Model RIBT24O1B. UL-listed 20 Amp. 24V coil, SPDT enclosed power relay contact, plenum-rated NEMA 1 housing, high/low voltage compartments, LED pilot light, and 16 in. long line voltage wiring pigtails.

# PART 3 EXECUTION

## 3.01 MOTOR WIRING

A. Provide all motor starters, motor contactors, and disconnects, except those furnished as a factory-installed integral assembly of packaged equipment.

B. Provide power wiring to and from disconnect switches, motor starters, contactors, variable speed drives, and motors.

## 3.02 CONTROL AND INTERLOCK WIRING

A. Provide all control wiring and conduit required to interlock and control equipment and systems. Provide auxiliary contacts as required to provide the sequence of operation described in Section 23 09 93.

## 3.03 MOTOR STARTER/CONTACTOR

A. Motor locations shown on the Drawings are approximate. Obtain exact location of motors from the Contractor installing the motor-driven equipment. **DO NOT ROUGH-IN BY SCALING THE ELECTRICAL PLANS.**

B. Final connections to rotating equipment shall be made using flexible conduit. Where exposed to moisture, conduit shall be liquid-tight flexible equal to “Sealtite.”

C. Coordinate heater sizes with the Contractor providing the motor. Install heater sizes based on final balanced motor amperage draw. Provide additional heaters as needed. Plumbing Contractor and HVAC Contractor shall be responsible for heaters in starters furnished as an integral part of mechanical equipment.

D. Establish and verify correct motor rotation.

END OF SECTION 26 29 13

# SECTION 26 29 23

# VARIABLE-FREQUENCY MOTOR CONTROLLERS

## *(PART OF HVAC CONTRACT WORK)*

## PART 1 GENERAL

### 1.01 PREFACE

A. **ALTHOUGH SPECIFIED IN DIVISION 26, THIS WORK IS TO BE A PART OF THE HVAC CONTRACT WORK.** HVAC Contractor is responsible for the work described in this Section, unless otherwise noted.

B. **Terminology:** In this Section, the term "Contractor" shall mean the HVAC Contractor performing Work on this Project, unless otherwise noted.

C. All provisions and requirements of Division 23, "HVAC," apply to this Section.

### 1.02 DESCRIPTION

A. Furnish the equipment in this Section for installation by the Electrical Contractor.

B. Furnish a variable speed drive (VSD) with bypass and circuit breaker disconnect for dedicated outdoor air system (DOAS) units RTU-1, as indicated on the Drawings. (**NOTE:** Total of [6] required; [2] at each rooftop unit per school.)

C. Ensure that motor insulation meets requirements set forth in NEMA MG1 Part 31.40.4.2 to ensure compatibility with, and adequacy for, drive selected.

D. Contractor shall be solely responsible for the adjustment and proper operation of VSD in effecting the desired air delivery rates required for space conditioning.

E. Provide services of a Factory Representative who will provide start-up and all required necessary adjustments, commissioning, and training for the Owner's maintenance staff.

F. Provide factory 2-year warranty on material and labor.

### 1.03 RATINGS AND CAPACITY

A. Size, capacity, arrangements, and location as indicated on the Drawings.

B. Drive must provide a minimum displacement power factor of 0.95 at any load or speed.

## 1.04 QUALITY ASSURANCE

A. Standards:
   1. National Electrical Manufacturers Association (NEMA) Standard ICS 7.0.
   2. Underwriters Laboratories, Inc., Label, (UL) 508 C.
   3. International Electrotechnical Commission (IEC) Parts 34.7 and 146.
   4. Institute of Electrical and Electronic Engineers (IEEE) Standard #519 (harmonic generation).
   5. American Society of Heating, Refrigerating, and Air Conditioning Engineers (ASHRAE): ASHRAE/IESNA 90.1-2007.
   6. Illuminating Engineering Society of North America (IESNA).
   7. International Performance Measurement & Verification Protocol (IPMVP), Volume III, Chapter 4, “Whole Building Calibrated Simulation” (Option D).

# PART 2 PRODUCTS

## 2.01 ACCEPTABLE MANUFACTURER

A. Danfoss.

B. Coordinate any specific requirements for interface voltage levels, input/output contacts, direct digital control (DDC) interface, wiring, and terminals with the Drive Manufacturer. Drive shall be provided with standard RS485 communication capability with BACnet, Johnson N2, Siemens FLN, and Modbus protocols (field-selectable).

## 2.02 VARIABLE SPEED DRIVE

A. Fully digital, adjustable frequency drive with a sine-coded pulse-width-modulated output waveform, programmable carrier frequency, Third Generation IGBTs, line or DC bus reactors, manual drive bypass controller, digitally programmable control panel, ventilating fans, NEMA 1 enclosure, provisions for remotely controlling the motor operation from the DDC system, and the following features:
   1. Capable of automatically restarting after an overcurrent, overvoltage, undervoltage, or loss of input signal protective trip. The number of restart attempts, trial time, and time between reset attempts shall be programmable.
   2. Customer interface including digital display and keypad used for local control, for setting all parameters, and for stepping through the displays and menus. The keypad shall be removable, capable of remote mounting, and shall have its own non-volatile memory. Keypad shall provide HAND/OFF/AUTO selection. The drive shall incorporate “bumpless transfer” when switching between AUTO and HAND modes.

| MODE | EFFECT |
|---|---|
| HAND | VSD shall be started and the speed shall be controlled from the up/down arrows. |

OFF VSD shall be stopped.
AUTO VSD shall start via an external contact closure and the VSD speed shall be controlled via an external speed reference.

3. An automatic extended control power loss ride-through circuit, which will utilize the inertia of the load to keep the drive powered. Minimum power loss ride-through shall be one-cycle, based on full load and no inertia. Typical control power loss ride-through for a fan load shall be 2 seconds minimum.
4. If the input reference (4-20mA or 2-10V) is lost, the VSD shall be capable of defaulting to a preset speed, stopping and displaying a fault, and providing an alarm warning signal.
5. Current limit circuits shall provide trip-fee operation as follows:
   a. Slow current regulation limit circuit shall be adjustable to 150% (minimum) of the VSD's normal duty current rating.
   b. Current switch-off limit shall be fixed at 350% (minimum, instantaneous) of the VSD's normal duty current rating.
6. The VSD shall have integral line or DC bus reactors totaling 5% impedance to reduce the harmonics on the input power distribution system.
7. Drive shall be capable of sensing a loss of load and signal the loss of load condition. Drive shall be programmable to signal this condition via a keypad warning, relay output, or over the serial communications bus. Relay outputs shall include programmable time delays that will allow for drive acceleration from zero speed without signaling a false underload condition.
8. Programmable adjustments:
   a. (2) programmable critical frequency lockout ranges to prevent the VSD from operating the load continuously at an unstable speed.
   b. Proportional/integral/derivative (PID) setpoint controller allowing a pressure or flow signal to be connected to the VSD, using the microprocessor in the VSD for the closed loop control. VSD shall be capable of loop-powering a transmitter supplied by others. PID setpoint shall be adjustable from the keypad, analog inputs, or over the communications bus.
   c. (2) programmable analog inputs shall accept a current or voltage signal for speed reference, or for reference and actual (feedback) signals for the PID controller. Analog inputs shall include a filter, programmable from 0.01 seconds to 10 seconds. The minimum and maximum values (gain and offset) shall be adjustable within the range of 0 mA to 20 mA and 0 volts to 10 volts.
   d. (5) programmable digital inputs for interfacing with external devices. (1) digital input may be utilized as a customer safety connection point for fire, freeze, and smoke interlock lockout.

e. (1) programmable analog output proportional to frequency, motor speed, output voltage, output current, motor torque, motor power (kw), DC bus voltage, active reference, and other data.
f. (2) programmable digital relay outputs rated for maximum switching current 8 amps at 24 VDC and 0.4 amps at 250 VAC, maximum voltage 300 VDC and 250 VAC, current rating 2 amps RMS. Outputs shall be true Form C type contacts. Relays shall be capable of programmable ON and OFF delay times.
g. (7) programmable preset speeds.
h. (2) independently adjustable acceleration and deceleration ramps, with times adjustable from 1 second to 1,800 seconds.
i. Programmable ramp or coast motor stops.

9. Parameter displays:
   a. Output frequency.
   b. Motor speed.
   c. Motor current.
   d. Calculated motor torque.
   e. Calculated motor power.
   f. DC bus voltage.
   g. Output voltage.
   h. Heatsink temperature (deg. F.).
   i. Analog input values.
   j. Analog output value.
   k. Keypad reference values.
   l. Elapsed time meter (resettable).
   m. kWh meter (resettable).
   n. Digital input status.
   o. Digital output status.
10. Protection functions:
   a. Overcurrent trip 350% instantaneous (170% RMS) of variable torque current rating.
   b. Overvoltage trip 130% of rated voltage.
   c. Undervoltage trip 65% of rated voltage.
   d. Overtemperature +90 deg. C.
   e. Ground fault either running or at start.
   f. Adaptable electronic motor overload ($I^2t$) shall protect the motor, based on speed, load curve, and external fan parameters.
11. Speed Command inputs:
   a. Keypad.
   b. (2) analog inputs, each capable of accepting a 0–20mA, 4–20mA signal, or a 0–10V, 2–10V signal.
   c. Floating point input shall be capable of accepting a 3-wire input from a Dwyer Photohelic (or equivalent type) instrument.
12. Serial communications.
   a. VSD shall have an RS-485 port as standard. Standard protocol shall be Johnson N2, Siemens FLN, Modbus, and BacNet.

b. VSD shall be able to communicate with PLCs, DCSs, and DDCs.
c. Serial communication capabilities shall include, but not be limited to, run-stop control, speed set adjustment, PID control adjustments, current limit, and acceleration/deceleration time adjustments. Drive shall have the capability of allowing the DDC to monitor feedback, such as process variable feedback, output speed/frequency, current (in amps), % torque, power (kW), kilowatt hours (resettable), operating hours (resettable), relay outputs, and diagnostic warning and fault information. Additionally, provisions for remote (LAN) fault reset shall be provided.
d. VSD shall allow the DDC to control the drive's digital and analog outputs via the serial interface. The serial communications interface shall allow for digital output (relay) control and analog output (analog) control. In addition, all drive digital and analog inputs shall be capable of being monitored by the DDC system.
e. VSD shall be connectable to PC-based software capable of operating, programming, and monitoring the drive, as well as diagnosing faults.

## 2.03 DRIVE BYPASS

A. Microprocessor-based bypass: Provide for manual transfer to line power by (2) contactors. Start/stop by maintained contact closure shall be 24V or 115V compatible and shall function in both the DRIVE and BYPASS modes. Controller shall include single-phase protection in both DRIVE and BYPASS modes.

| POSITION | EFFECT |
|---|---|
| DRIVE | Bypass contactor is open and the drive output contactor is closed. |
| TEST | Both contactors are open. |
| BYPASS | Drive output contactor is open, and the bypass contactor is closed. |

1. Customer interlock terminal strip: Provide a separate terminal strip for connection of freeze, fire, smoke detector contacts, and external START command. All external safety interlocks shall remain fully functional whether the system is in HAND, AUTO, or BYPASS modes.
2. Fast-acting semi-conductor fuses exclusive to the VSD allow the VSD to disconnect from the line prior to clearing upstream branch circuit protection, maintaining bypass capability.
3. Class 10 electronic motor overload protection shall be included to protect the motor in the BYPASS mode.

## 2.04 DISCONNECT SWITCH

A. Door/cover interlocked fusible disconnect or circuit breaker switch capable of disconnecting all input power from the drive. Disconnect / circuit breaker

handle shall be through the door, and shall be padlockable in the OFF position.

B. Entire drive assembly, including bypass, shall have an AIC rating of at least 30,000 amperes.

## 2.05 FLOOR STAND

A. Furnish 12 in. high floor-stand kit, where shown on Drawings, to permit enclosure to be mounted above the floor.

# PART 3 EXECUTION

## 3.01 INSTALLATION

A. Electrical Contractor shall install the drive in accordance with recommendations of the VSD Manufacturer, as outlined in the installation manual.

B. Electrical Contractor shall provide power wiring to VSD, and from the VSD to the motor. Conductors to the motor shall be suitably insulated to handle the output of the VSD.

C. Temperature Controls Subcontractor shall provide and connect all DDC, data, control, and interlock wiring required for the speed controller. Wiring shall include, but not be limited to, the following:
   1. Start/stop of motor.
   2. Speed control of motor.
   3. Drive-on-bypass indication (contact closure).

D. A factory-authorized service center shall provide certified factory start-up. A certified start-up form shall be filled out for each drive, with a copy provided to the Construction Manager.

END OF SECTION 26 29 23

# SECTION 26 50 00

# LIGHTING

## PART 1 GENERAL

### 1.01 RELATED DOCUMENTS

A. Section 26 05 60, “Requirements for Completion of Electrical Work.”

B. Section 26 09 23, “Lighting Control Devices.”

### 1.02 DESCRIPTION

A. Provide lighting fixtures as shown on the Drawings, complete with ballasts, frames, canopies, hangers, straps, and trim, as required for a complete installation.

B. Coordinate fixture mounting type with ceiling type listed on the Architectural Room Finish Schedule.

C. Provide spare lamps and ballasts, as listed in Section 26 05 60.

### 1.03 QUALITY ASSURANCE

A. Standards:
1. Underwriters Laboratories, Inc., (UL) Label.
2. Certification by Certified Ballast Manufacturers Association (CBM) / Electrical Testing Laboratories (ETL).
3. National Fire Protection Association (NFPA): 2011 NFPA 70, “National Electrical Code® (NEC).”
4. Americans with Disabilities Act (ADA).”
5. American Society of Heating, Refrigerating, and Air Conditioning Engineers (ASHRAE): ASHRAE/IESNA 90.1-2007, Section 9, “Lighting.”
6. Illuminating Engineering Society of North America (IESNA).

## PART 2 PRODUCTS

### 2.01 LIGHTING FIXTURES

A. Refer to Drawings for Lighting Fixture Schedule.

B. Only those Manufacturers listed on the Lighting Fixture Schedule will be acceptable.

C. All fixtures that are to be installed on walls in halls, corridors, passageways, or aisles and mounted between 27 in. and 80 in. above the finished floor shall protrude no more than 4 in. into the space to be ADA-compliable.

D. Provide number of faces and direction arrows for all exit lights as indicated on the Drawings.

## 2.02 BALLASTS

A. Fluorescent Instant Start: Class P premium, "A" sound rating, instant start, total harmonic distortion (THD) less than 10%, minimum ballast factor of 1.00, a power factor of 0.98 or better, high-frequency electronic type, with 0 deg. F. minimum starting temperature.

B. Fluorescent Programmed Start: Class P Premium, "A" sound rating, program start, THD less than 10%, minimum ballast factor of 0.88, a power factor of 0.98 or better, high-frequency type, with 0 deg. F. minimum starting temperature.

## 2.03 BALLAST DISCONNECT CONNECTORS

A. For commercial, indoor, linear fluorescent fixtures, furnish a factory-installed or field-installed connector, UL-listed in accordance with 2011 NEC 410.8, to permit the simultaneous disconnect of line and neutral.

## 2.04 LAMPS

A. Fluorescent lamps shall be type and color as shown on the Drawings, unless otherwise indicated herein.

B. Acceptable Manufacturers: OsramSylvania, General Electric, Phillips, Venture, or Iwasaki (EYE).

# PART 3 EXECUTION

## 3.01 INSTALLATION — FIXTURES

A. Ceiling Location: Coordinate the location of all lighting fixtures with the Architectural reflected ceiling plan and with any diffusers, grilles, registers, smoke and heat detectors, speakers, or sprinklers.

B. Securely mount all fixtures to elements of the building structure or suspended therefrom, such that fixtures will be square, plumb, and rigid; will not fall or sag; and will not cause the suspended ceiling system to sag or wall board to pull away.

C. Provide Unistrut steel angles, channels, etc., to securely mount fixtures suspended from joists, metal decks, or similar construction.

D. Furnish flush fixtures with installation provisions compatible with the suspended acoustical tile system provided.

E. Verify the actual suspension system to be used and make all adjustments in fixture installation provisions occasioned thereby.

F. Provide hanger supports and clamps as required to support fixture from **STRUCTURE**, not from ceiling or wallboard. Also, use hurricane/earthquake ("caddy") clips to secure fixtures to grid.

G. Provide (2) independent galvanized steel safety hanger wires or safety chains to hang lay-in fluorescent fixtures from structure. Support all new and relocated fixtures. Wires or chains shall pass 3 ft., 50 lb. drop test.

H. Attach all fixtures to UL-listed boxes, which shall be rigidly supported to the structure independent of the ceiling suspension system. Provide an additional support to the ceiling suspension system by means of hanger bars between tees as required.

I. Flush fixtures with light spilling between frame and ceiling shall have felt gasket installed between trim and ceiling.

J. Fixture brackets, mounting hardware, bolts, nuts, washers, connectors, etc., shall be aluminum, galvanized steel, or other non-rusting finish.

K. Clean fixtures of dirt both inside and outside. No fixtures shall be installed until painting work is completed.

L. Replace damaged, deformed, or defective ballasts and fixtures.

M. All fixtures installed outdoors shall be fully gasketed to keep bugs out of lamp housing and lenses.

## 3.02 INSTALLATION — LAMPS

A. Install lamps in all fixtures installed under this Contract in accordance with the Fixture Schedule.

B. Install new lamps not more than (10) days prior to date of completion.

C. All lamps shall be in working order at Contract Completion. Replace all defective lamps with new lamps when the work is finally accepted.

## 3.03 DEFECTIVE BALLASTS/LAMPS

A. Replace all defective or noisy ballasts and inoperative lamps that fail during the 1-year guarantee period.

END OF SECTION 26 50 00

# SECTION 26 55 51

# CLASSROOM LIGHTING

## PART 1 GENERAL

### 1.01 RELATED DOCUMENTS

A. Section 26 05 19, “Low-Voltage Electrical Power Conductors and Cables.”

B. Section 26 05 33, “Raceways and Boxes for Electrical Systems.”

C. Section 26 05 60, “Requirements for Completion of Electrical Work.”

### 1.02 DESCRIPTION

A. Provide an integrated classroom lighting system (ICLS) and control system, including the following:
   1. Interior lighting fixtures with lamps, ballasts, and controls designed specifically for multi-functional classroom lighting.
   2. Teacher control center, single-pole switches, low-voltage switches, dimmer controls, occupancy sensors, and light-level photo-sensors, as noted on the Drawings.
   3. Power packs and relays, switches, and wall cover plates, with labels.

B. ICLS shall consist of pendant luminaires, teacher control center, dimmer control, faceplates with laser-engraved labels, motion control sensors, photo sensors, relay control interface with modular receptacles, plenum-rated low-voltage control cables with modular connectors, and control components.

C. The pendant luminaires shall contain (3) rows of 48 in. fluorescent lamps; outer rows shall be dimmed.

D. A teacher control center (TCC) shall be located near the Instructor’s primary teaching position.
   1. Wiring from the TCC shall be through a factory-wired receptacle and factory-supplied low-voltage cable with pre-installed connectors as described.
   2. Quiet Time Mode: Instructor can use a momentary toggle switch on the TCC to send a signal to the motion sensor. When the switch is toggled, the lighting in the classroom will stay on, even in the absence of motion, for (1) hour. After (1) hour, the motion sensor will automatically restore to its previous state. Instructor can toggle the switch at any time to re-set Quiet Time Mode to a full 60-minute ON period. While in Quiet Time Mode, the Instructor will have full control of the classroom lighting. The label on the TCC will read “QUIET TIME 1 HOUR ON.”
   3. Audio/visual Mode: The Instructor can use a toggle switch located on the TCC to switch between General Mode ([2] indirect lamps ON, [1] direct lamp OFF) to audio/visual Mode ([1] direct lamp ON,

[2] indirect lamps OFF). Switch shall be labeled “GENERAL” and “A/V.” At no time shall all (3) lamps be on at once.

4. Dimming: The Instructor can use a slide dimmer on the TCC to dim outer lamps from 100% to 5%. Switch shall be labeled “DIM.”
5. Occupancy sensor: Sensor shall be ceiling-mounted and connect to the lighting system through low-voltage wiring using factory-installed receptacles and factory-supplied cable with pre-installed connectors as described. Sensor shall turn lights ON when both passive infrared sensors and ultrasonic sensors detect occupancy. Once on, detection by either sensor will keep the lights on. A field-adjustable time-delay shall be factory-preset to recommended NEMA standards. Sensitivity settings shall adjust automatically through integrated sensor technology.
6. Daylight control:
   a. Sensor shall be ceiling-mounted facing the primary window wall and located in accordance with the Manufacturer’s installation instructions.
   b. Sensor shall provide for a user-adjustable light level setting between 10 footcandles and 1,000 footcandles.
   c. Sensor shall provide for an adjustable dead band setting to prevent lighting system cycling.
   d. Sensor shall be connected to a set of relays by plugging together low voltage cables. The relays will be used to dim the outer row of lights to 10%, then to OFF, when the sensor indicates that sufficient daylight is present.
   e. Sensor shall be factory-calibrated to reduce the field commissioning time to calibrate the units.
   f. System shall be programmed to provide an average of 50 footcandles at desk level when general mode lighting is selected.

E. Provide spare parts as listed in Section 26 05 60.

## 1.03 QUALITY ASSURANCE

A. Standards:
   1. Underwriters Laboratories, Inc. (UL).
   2. National Fire Protection Association (NFPA): 2011 NFPA 70, “National Electrical Code® (NEC).”
   3. National Electrical Manufacturers Association (NEMA).
   4. American Society for Testing and Materials (ASTM).
   5. American Society of Heating, Refrigerating, and Air Conditioning Engineers (ASHRAE): ASHRAE/IESNA 90.1-2007, Section 9, “Lighting.”
   6. Illuminating Engineering Society of North America (IESNA).

## 1.04 WARRANTY

A. Fluorescent Ballasts Warranty: Manufacturer agrees to repair or replace ballasts that fail in materials or workmanship within (5) years.

B. T8 Fluorescent Lamps Warranty: Manufacturer shall replace lamps that fail within (2) years.

# PART 2 PRODUCTS

## 2.01 FIXTURES AND COMPONENTS, GENERAL

A. Fluorescent Fixtures: Steel construction, corrosion-resistant finish, complying with UL 1598. Where luminaire efficiency rating (LER) is specified, test according to NEMA LE 5 and LE 5A as applicable.

B. Doors, Frames, and Other Internal Access: Smooth operating, free of light leakage under operating conditions, and designed to permit relamping without use of tools.

C. Acceptable Manufacturer for Beechwood and Etna Elementary Schools: Finelite.

D. Acceptable Manufacturer for Kae Elementary School: Peerless.

## 2.02 FIXTURES

A. Optics:
   1. Pendent-mounted luminaire with an indirect/direct distribution using a semi-specular parabolic louver and a 96% or greater reflective center optical section.
   2. Designed to accept T8 electronic ballasts with ballast factor (BF) ranging from 0.71 to 1.18, to achieve the requirement of 1 watt/sq. ft. or less. Generally, 2-row/classroom systems will use ballasts with 1.18 BF.

B. Mounting: Adjustable aircraft cable system to allow up to 48 in. suspension.

C. Nominal Dimensions: 10 in. wide x 2-1/2 in. high in multiples of 48 in. long.

D. Lamps: (3)/cross section.

E. High-BF Ballasts: 1.18 BF 3-T8 electronic ballasts.
   1. Acceptable Manufacturer: Sylvania # QT3X32 PLUS.

F. Low-BF Ballasts: 0.77 BF 3-T8 electronic ballasts.
   1. Acceptable Manufacturer: Sylvania # QT3X32 ISL-SC.

G. Dimming Ballasts: 5% to 100% 3-T8 electronic dimming ballasts with 0 volt to 10 volt DC control.
   1. Acceptable Manufacturer: Sylvania # QTP3X32 DIM5-Q.

H. Other Acceptable Manufacturers: Approved equal by General Electric or Lithonia.

## 2.03 FLUORESCENT LAMP BALLASTS

A. Electronic ballasts for linear lamps shall include the following features, unless otherwise indicated:
   1. Comply with NEMA C82.11.
   2. Ballast type: Instant start, unless otherwise indicated.
   3. Dimming ballasts: Will be rapid-start or programmed-start units.
   4. Sound rating: A.
   5. Total harmonic distortion rating of less than 20% according to NEMA C82.11.

B. Ballasts for dimmer-controlled fixtures shall comply with general and fixture-related requirements above for electronic ballasts and the following features:
   1. Dimming range: 100% to 5% of rated lamp lumens.
   2. Ballast input watts: Can be reduced to 25% of normal (93 watts reduced to 23 watts).
   3. Compatibility: Certified by Manufacturer for use with specific dimming system indicated.

## 2.04 FLUORESCENT LAMPS

A. Low-Mercury Lamps: Comply with Federal toxic characteristic leaching procedure test, and yield less than 0.2 mg of mercury per liter, when tested according to NEMA LL 1.

B. T8 rapid-start low-mercury lamps, rated 32 watts maximum, 3,100 initial lumens (minimum), color rendering index (CRI) of 85 (minimum), color temperature of 3,500 K, and average rated life of 20,000 hours, unless otherwise indicated.

## 2.05 FIXTURE SUPPORT COMPONENTS

A. Wires: ASTM A 641/A 641M, Class 3, soft temper, zinc-coated, 12 gauge.

B. Rod Hangers: 3/16 in. minimum diameter, cadmium-plated, threaded steel rod.

C. Aircraft Cable Support: Use cable, anchorages, and intermediate supports recommended by the Fixture Manufacturer.

## 2.06 LIGHTING CONTROL DEVICES

A. Teacher Control Switch: Single-pole, double-throw switches rated for their operating voltage and current. Specification grade decorator style.

B. Row Control Switches: 2-pole, single-throw switches rated for their operating voltage and current. Specification grade decorator style.

C. Dimming Ballast Controls (included in TCC): Sliding-handle type with ON/OFF control; compatible with ballast and having light output and energy input over a dimming range of 100% to 5%.

D. Cover Plates: Stainless steel, quantity of opens to match quantity of decorator-style devices.

E. Occupancy Sensors: Adjustable sensitivity and off delay time range of 5 minutes to 30 minutes. Ceiling-mounted, white finish, with ultrasonic sensor and infrared sensor.

F. Light Level Sensor: Detect changes in ambient lighting level and provide supply for ON/OFF control.
   1. Detection range: Between 10 footcandles and 200 footcandles.
   2. Deadband: Adjustable with a 1 to 3 ratio.
   3. Delay: Adjustable from 3 seconds to 5 minutes.
   4. Sensor will operate via a 24 volt DC power supply.

## PART 3 EXECUTION

### 3.01 COORDINATION

A. Coordinate layout and installation of lighting fixtures and suspension system with other construction that penetrates ceilings or is supported by them, including HVAC equipment, fire-suppression system, and partition assemblies.

### 3.02 INSTALLATION

A. Fixtures: Set level, plumb, and square with ceilings and walls.

B. Support for Fixtures in or on Grid-Type Suspended Ceilings:
   1. Install a minimum of (1) ceiling support system rod or wire for each pendent support cable from structure (not from ceiling).
   2. Install at least (1) independent support rod or wire from structure to a tab on lighting fixture. Wire or rod shall have breaking strength of the weight of fixture at a safety factor of 3.

C. Continuous Rows: Suspend from structure (not from ceiling) with cable, brace to limit swinging as required by seismic conditions.

### 3.03 CLEANING AND PROTECTION

A. Clean luminaire optical surfaces.

B. After completing installation of exposed, factory-finished luminaires, inspect exposed finishes and repair damaged finishes.

### 3.04 ADJUSTING

A. Set field-adjustable components on occupancy sensors, light level sensors, and dimmer control.

B. Occupancy Adjustments: When requested within (12) months of date of Substantial Completion, provide on-site assistance in adjusting system to suit actual occupied conditions. Provide up to (2) visits to site outside normal occupancy hours for this purpose.

## 3.05 FIELD QUALITY CONTROL

A. Verify normal operation of each fixture after installation.

B. Test for Emergency Lighting: Interrupt power supply to demonstrate proper operation. Verify normal transfer to emergency power source and retransfer to normal.

C. Corroded Fixtures: During warranty period, replace fixtures that show any signs of corrosion.

## 3.06 DEMONSTRATION

A. Factory-authorized service representative shall train the Owner's maintenance personnel to adjust, operate, and maintain ICLS. Refer to Section 26 05 60.

END OF SECTION 26 55 51

DIVISION 27
TECHNOLOGY

SECTION 27 05 00
COMMON WORK RESULTS FOR TECHNOLOGY

# PART 1 - GENERAL

## 1.01 SUMMARY

A. Section Includes

1. This section contains the general requirements that shall be required of any/all Contractors bidding and/or executing any part or parts of these Documents.

B. General Requirements

1. Drawings and Specifications are to be considered as supplementing each other. Work specified but not shown, or shown but not specified, shall be performed or furnished as though mentioned in both the Specifications and the Drawings.

2. The Contractor shall provide all Technology Systems and Cabling Infrastructure as indicated in the Documents. Should there be any requirements for further subdivision of scope of work, such subdivisions shall be indicated by either notated clarification or schedule on the Drawings.

3. The Contractor shall coordinate with all other trades to assure the execution of these Documents and their intent. Any equipment or devices either not installed, or installed in a fashion other than that indicated by the intent of these Documents, shall be Provided or re-worked so as to become compliant with the intent of these Documents. The financial responsibility for such additional Work or Materials shall be borne solely by the Contractor.

4. The Contractor shall provide all Work required to deliver to the Owner all systems and/or infrastructure, complete and functional, as indicated in these Documents.

1.02 All Drawings and Specifications shall be considered as complementary to each other. The Contractor shall provide all cabling, equipment, devices, etc. required to fulfill the intent of the design. Items specified, but not drawn, or drawn but not specified shall be considered as being provided as if they had been explicitly called out in both.

A. Products Supplied but not installed by the Contractor

1. The Contractor shall coordinate the delivery of items that must be installed by other trades so as to assure timely delivery.

2. The Contractor shall verify lead times of all items required under this heading. Should the delivery of such items be delayed due to the Contractor's efforts, or lack thereof, the Contractor shall bear the burden of compensation to all related trades and for any expedited handling, so as to regain any loss incurred by the project schedule.

B. Products Installed but not Supplied by the Contractor

1. It shall be incumbent upon the Contractor to verify the exact requirements of any system, device, equipment or Materials supplied to them for installation by the Contractor. Any deviations from the Contractor Documents to these requirements shall be brought to the immediate attention of the Engineer, and to the other trades as necessary.

C. Related Sections

1. Section 27 05 04 – Pathways for Communications

2. Section 27 05 05 – Firestopping

3. Section 27 05 26 – Technology Grounding System

4. Section 27 10 00 – Structured Cabling System

5. Section 27 51 27 – Classroom Sound Reinforcement System

6. Division 1 – General Requirements

7. Division 2 – Earthwork

8. Division 7 – Firestopping

9. Division 9 – Finish Painting

10. Division 11 – Equipment

11. Division 14 – Conveying Systems

12. Division 15 – Mechanical

13. Division 26 – Electrical

Unit Pricing

14. The Contractor shall review and provide at the time of bid form submission all unit pricing required in the attachment to this Section. This submission shall utilize the form included as the attachment all information included on this form shall be completed. The Owner reserves the right to consider any bid submission as being not completely responsive that is not completely filled in and returned with the bid form.

1.03 REFERENCES

A. The provisions of these specifications along with all Drawings, Alternates, Addenda, Bulletins, RFP's or other related documents shall be considered an integral part of the scope of work for this/these Contractor(s). These Documents along with the Division 1 and other related division's documentation shall be examined by this Contractor and any/all sub-contractors prior to submission of their bid.

1.04 DEFINITIONS

A. The Definitions contained within shall be the basis of the definitions required for this Scope of Work. Additional definitions shall be found in any given Specification Section that pertain to that Specification Section.

B. Definitions:

1. Acceptance – The term "Acceptance" shall mean the Owner's notification to the Contractor that the work, as defined herein, has been Furnished and Installed in accordance with the Contract Documents. Furthermore, the Contractor has completed, documented and submitted all requisite documentation both to the Owner and any other required Company or Organization to achieve all warranties, certifications or other related documents.

2. Construction Manager (CM) – The term "Construction Manager" shall mean the company, including staff, responsible for the construction and commissioning of the new and/or renovated building(s) as defined within the scope of this project.

3. Contact Documents – The term "Contract Documents" shall mean all Drawings, Specifications or other related documents representing the scope of the project. Such Documents shall include, but not be limited to, sketches, addenda, change orders, proposal requests and architectural supplemental instructions released under the scope of this project.

4. Contractor – The term "Contractor" shall refer to the Technology Contractor, and shall include all of the Technology Contractor's sub-contractors, and their sub-contractors. The term Contractor shall indicate the Electrical Contractor for those items that are described as being furnished and/or installed by the Electrical Contractor in the "Scope Clarifications" on the Drawings.

5. Drawings – All graphic and/or pictorial portions of the Contract Documents which are used to represent the design and scope of the project. These include, but are not limited to, plans, details, sections, elevations, diagrams and schematics

6. Electrical Contractor (EC) – The term "Electrical Contractor" shall mean the contractor or contractors responsible for providing the scope of work described in the electrical drawings and specifications.

7. Furnish – The term "Furnish" shall mean to supply and deliver to the project job site, ready for unloading, unpacking, assembly, installation, and other related work.

8. Install – The term "Install" shall mean all work related to the unloading, unpacking, placing, anchoring, bracing, cabling and other related work.

9. Low Voltage Equipment Room (LVER) – The term "Low Voltage Equipment Room" shall mean the space containing the equipment and enclosures supporting those low voltage systems not accounted for in the telecommunications system. In some cases, the LVER may be co-located with the Telecommunications Room.

10. Materials – The term "Materials" shall mean all products, supplies, and components, provided by the Contractor to be incorporated into work as described within these Documents.

11. Owner – The term "Owner" shall mean the company or organization for whom the work is being performed, and shall include any/all duly appointed representatives of the company or organization.

12. Project Manager – The term "Project Manager" shall mean the person from either the Owner or Contractor who shall be the sole point of contact.

13. Provide – The term "Provide" shall mean to furnish and install.

14. Specifications – The term "Specifications" shall mean that portion of the Contract Documents that consists of the written requirements for all Materials, equipment, systems, installation standards, means and methods for the Work whose scope is defined herein.

15. Sub-Contractor – The term "Subcontractor" shall mean any person, persons, organization or companies providing the Contractor with any portion of the Work required by the Scope of these Documents.

16. Telecommunications Room (TR) – The term "Telecommunications Room" shall mean the space containing the equipment and enclosures supporting the Telecommunications Systems. In some cases, the Telecommunications Room may be co-located with the Low Voltage Equipment Room.

17. Technology Contractor – The term "Technology Contractor" shall mean the Contractor responsible for providing the Work required to Provide the entire scope of work described in these Contract Documents. Such scope does not include those portions of the Work that is indicated within these Documents as being provided by the Electrical Contractor.

18. Work – the term "Work" shall mean all contractual obligations including, but not limited to, Project Management, Materials, labor, equipment, testing and documentation required by these Documents. Such obligations may include all or any part of the scope described herein.

1.05 SUBMITTALS

A. Submittals **at the time of bid form submission** shall include, but not be limited to:

1. All pricing information required by both the CM/Owner's bid form, and any additional pricing information required within the Technology Documents,

2. Resume of the proposed Project Manager,

3. All certifications or letters of authorization requested within these Documents,

4. An initial schedule derived by the Contractor.

NOTE: The Owner reserves the right to review all certifications and/or all letters of authorization for authenticity, validity and current status. Based on the outcome of this review, the Owner reserves the right to determine the Contractor's Qualifications. Furthermore, should the Contractor not provide this documentation at the time of the Bid Form submission, except as indicated otherwise in these Documents, the Owner reserves the right to declare the Contractor as being not fully responsive.

B. Submittals due **after execution of the agreement, but prior to any notice to proceed** to the Contractor shall include, but not be limited to:

1. Product Data Sheets

2. Shop Drawings

3. Any Samples or Mock Ups that may be required or requested

4. Spare Parts List

C. Product Data Sheets

1. All product data sheets and shop drawings submitted shall be reviewed for general compliance with the Contract Documents, not for dimension accuracy, quantities, etc. Once the submittals have been approved and returned to the Contractor, they shall be used for procurement of the Materials required. It is the responsibility of the Contractor to assure accurate procurement. Submittal review shall not be used to alleviate the Contractor from responsibility for errors and omissions during the procurement of these Materials.

2. Product information that is required under the various sections of these Documents shall include all pertinent data required to ascertain acceptability of the product. This information shall include, but is not limited to, exact dimensions, color, model number, and performance criteria. Where a data sheet is utilized for multiple products, the products information to be reviewed shall be clearly identified. Where one data sheet can be used for more than one item specified, multiple copies shall be submitted. Each copy shall be used for only one item's submission. All product information shall bear the Contractor's approval stamp. Any submission not bearing the approval stamp of the Contractor, or not being clearly indicative of the specific choice of where multiple choices are available, shall be returned without processing.

D. Shop Drawings

1. Shop Drawings for all custom fabricated equipment and system riser diagrams shall be submitted for approval. The drawings must include all information required to ascertain acceptability of the custom device or system.

2. Shop Drawings shall include, but not be limited to, exact dimensions, color, and cabling requirements.

3. All Shop Drawings shall be drawn to scale where required to indicate construction.

4. All Shop Drawings shall bear the Contractor's approval stamp. Any submission not bearing the approval stamp of the Contractor shall be returned without processing.

5. Shop Drawings shall be reviewed for the acceptability of the items indicated on the Drawings and not to specifically to enumerate items not indicated on the Drawings. It is the assumption of the Engineer that items not indicated shall be submitted in a later time. Any indication of items not indicated on the submission shall be purely done as a convenience of the Contractor.

E. Samples

1. The Owner/Engineer reserves the right to require samples of any/all Materials for the purpose of clearly determining acceptability of same. The Engineer shall be free to perform any test destructive of non-destructive on any/all Materials submitted. For specific sample requirements, refer to the various sections of the specifications.

2. Submit all samples required in a timely fashion, based on request from Engineer, or as specified herein. All samples must be submitted prior to installation, unless specifically authorized in writing. The Contractor shall provide the sample with sufficient time for said examination and review without impacting the production schedule.

3. All samples submitted to the Engineer for review and/or approval shall become the property of the Engineer and shall not be returned. Should the manufacturer not provide free samples of any item(s) requested, it shall become the responsibility of the Contractor to bear the cost. At the conclusion of said examination and review the Engineer reserves the right to discard or keep any sample, or return the sample to the Contractor for discarding.

F. Quality Assurance/Control Submittals

1. The Contractor shall submit to the Engineer any custom or proprietary installation requirements. Such submissions are for review only, and do not require approval by the Engineer as it is a specific requirement of these specifications that all Materials, equipment and devices be installed per the manufacturer's suggested installation procedures.

G. Close Out Submittals

1. The Contractor shall provide all close out submittals required elsewhere in these Documents as a condition of final acceptance. Failure to do so may impede the final acceptance by the Owner.

H. Any variations or deviations from the Specifications and Drawings, unless approved in writing by the Engineer, is the sole responsibility of the Contractor. The Contractor shall clearly indicate all variations or deviations in the Data Sheets or Shop Drawings. The Contractor shall further notify the Engineer of the variation or deviation in writing at the time of the submission.

I. The Contractor, by virtue of these specifications, understands and acknowledges that any changes that might occur during the submittal phase is not a change order, and does not authorize the Contractor to pursue additional compensation. The submittals shall be used to express the understanding of the scope of the contract to the Engineer.

J. The Contractor shall refer to the other Specification Sections within this Document for additional requirements for submittal and shall fully comply with those requirements. Should the requirements listed in any subsequent section be in conflict with these requirements, the Contractor shall notify the Engineer in writing a minimum of two weeks prior to the bid submission for resolution. Should the Contractor fail to provide such notification, the Owner/Engineer reserves the right to require either or both of the submission requirements to be met.

1.06 QUALITY ASSURANCE

A. Qualifications

1. The Contractor shall be fully qualified, trained and certified to perform the Work indicated on these drawings.

2. The Contractor shall have been active in the bidding, being awarded and executing work consistent with that which is indicated on these Documents for a minimum of five (5) years. Any deviation from this requirement is at the sole discretion of the Engineer. Requests for such deviations shall be submitted in writing a minimum of two weeks prior to the bid submission. Approval of such requests shall be in writing from the Engineer. A copy of this approval shall be submitted with the bid.

3. The Contractor shall have completed a minimum of three projects of like scope and complexity within a consistent time frame consistent with the magnitude and scope of the project. Project names and references, including, but not limited to, contact name and phone numbers of personnel with whom the Contractor has directly interacted shall be provided to the Engineer upon request with the expectation, that the Engineer will verify these references. Any negative references shall be duly noted, and considered when determining the Contractors qualifications or lack of same.

4. The Contractor shall maintain an installation staff whose sole function is that of installing the systems or infrastructure indicated on the drawings. The Contractor shall not utilize any installation personnel that have been provided by any temporary staffing or placement agency. Only personnel qualified and experienced in the installation of the system or infrastructure for which they are Installing, may perform the installation work.

5. The Contractor shall not utilize any apprentice or trainee personnel for the installation or termination of cabling or equipment.

6. The Contractor shall maintain a local presence, within fifty miles, which shall include, but not be limited to, warehousing of Materials, an office with support personnel, Project Management personnel, and a service department having a stock of replacement parts consistent with, at a minimum, the spare parts required by this project.

7. The Contractor shall be fully insured and bondable as referenced within these Documents.

8. The Contractor shall have staff with the ability, if required, to be assigned solely to this project for its duration.

9. The Contractor shall provide a list of all personnel indicated as being required to be assigned to this project during the process of bid submission and review. Should the Contractor fail to provide the list of personnel during this time period, the Owner reserves the right to consider the Contractor as being not fully responsive.

B. Regulatory Requirements

1. Incumbent on the execution of these Documents is the requirement that all work adhere to and be complaint with all codes and regulations. These codes and regulations include, but are not limited the latest revisions (or the applicable revisions) of:

   a. FCC Part 15 – Radiation Limits

   b. FCC Part 22 – Public Mobile Service

   c. FCC Part 68 – Connection of Terminal Equipment to the Telephone Network

   d. FCC Part 76 – Cable Television Service

   e. NESC – The National Electric Safety Code

   f. NFPA 70 – The National Electric Code

   g. NFPA-70E – Standard for Electrical Safety Requirements for Employee Workplaces

   h. NFPA-72 – National Fire Alarm Code

   i. NFPA-75 – Protection of Electronic Computer Data Processing Equipment

   j. NFPA-101 – Life Safety Code

   k. NFPA-297 – Guide on Principles and Practices for Communications Systems

   l. OBC – The Ohio Building Code

2. Consistent with the expectation of quality workmanship executed in a neat and workman like fashion, all installation, labor and materials shall be provided such that they are compliant with the latest revision of the followings standards:

   a. ANSI/TIA/EIA 568 – Commercial Buildings Telecommunications Cabling Standard

   b. ANSI/TIA/EIA 569 – Commercial Building Standard for Telecommunications Pathways and Spaces

   c. ANSI/TIA/EIA 606 – Administration Standard for the Telecommunications Infrastructure of Commercial Building

   d. ANSI/TIA/EIA 607 – Commercial Building Grounding and Bonding Requirements for Telecommunications

e. BICSI TDMM – Telecommunications Distribution Methods Manual

Note: The standards, codes and regulations listed above are only a partial listing. Any/all industry standards, codes and regulations that are applicable to the scope of the Work required shall be considered as a specific requirement of this project.

3. The Contractor shall become fully aware of all plenum vs. non-plenum areas, and shall provide the required Materials and labor to fulfill said code requirements.

4. The Contractor shall become fully aware of all fire rated and smoke rated walls, and shall provide the required Materials and labor to fulfill said code requirements.

5. The Contractor shall completely versed in the all applicable codes and shall comply fully with all codes and regulations, including, but not limited to any potential deviations from same due to interpretations by the Authority Having Jurisdiction.

C. Certifications

1. As indicated in the various sections of these Specifications, all Contractors responsible for the provision of any of these systems shall possess certifications acknowledging the expertise of both the Contractor firm and the personnel assigned to the project. Such certifications shall be current, and remain current for the duration of the project. Should any personnel lose the associated certification, the Owner/Engineer reserves the right to require that said personnel be replaces with competent, certified personnel. The Owner/Engineer reserve the right to review, qualify and refuse for any reason, any suggested replacement personnel.

2. As indicated elsewhere in these Documents, all certifications must be submitted to the Engineer for approval **AT TIME OF BID FORM SUBMISSION**, unless the certified personnel are a member of a sub-contractor or sub-sub contractor. In such cases, the prime Contractor shall submit any required certifications a minimum of two weeks prior to declaration of sub-contractors or sub-sub-contractors. Submissions of certifications of sub-contractors and sub-sub-contractors shall be used as one of the key criteria in determining the qualifications of the sub-contractor and sub-sub-contractor. The Owner/Engineer reserves the right to disqualify and sub-contractor or sub-sub-contractor based on these certification submissions.

D. Samples

1. Samples shall be off the shelf product obtained from distribution, the source of which may be randomly selected by the Engineer. No product shall come directly from manufacturing without the express written consent of the Engineer. The Engineer shall not be required to produce any purchase orders or financial compensation for said samples. Any purchase orders or financial compensation required for said samples shall be the responsibility of the Contractor or the manufacturer.

E. Mock Ups

1. The Engineer reserves the right to require submission of mock ups of any/all system configurations for proof of concept, and/or aesthetic impact.

2. Mock ups shall be constructed in the field under actual field conditions, unless explicitly required otherwise by the Engineer in writing. Such mock ups shall be made available to the Engineer for review and comment either in the field or at the Engineer's office, at the Engineer's discretion. Such comments shall be utilized to modify the design as necessary, prior to installation.

F. Pre-installation Meetings

1. The Contractor's Project Manager shall attend pre-installation meetings at which time the Engineer shall review scope and design intent to assure proper execution and provision of the appropriate Materials. Such meetings shall be scheduled with the Engineer and Owner two weeks prior to the notice to proceed, to allow sufficient time for the Contractor and Engineer to determine a mutually agreed upon time and location.

1.07 DELIVERY STORAGE AND HANDLING

A. Packing, Shipping and Handling

1. The Contractor shall provide appropriate personnel to perform all packing shipping and handling.

2. The Contractor shall accept full liability for all Materials handled until such equipment and devices have been installed, tested and accepted by the Owner.

B. Storage and Protection

1. All Materials required for the project, but not having sufficient storage space on site, shall be stored at a secured location under the control of the Contractor.

2. Materials being stored on site, shall be secured by the Contractor until such time as they are required in the field.

3. Damage to any of the aforementioned Materials, shall be the financial responsibility, until such time that the Owner has accepted the installation.

4. Any additional security to assure the safety and security of these Materials shall be born by the Contractor at no additional expense by the Owner.

C. Waste Management and Disposal

1. All refuse and debris generated by the Contractor shall be the responsibility of the Contractor to provide appropriate means by which to dispose of such scrap Materials. The Contractor shall provide all required containers and vehicles so as to dispose of properly, at no additional cost to the Owner.

2. The Contractor shall clean all debris created by the Contractor caused by the process of providing any of the Materials within the Documents, and dispose of the resultant debris in a appropriate fashion.

1.08 PROJECT/SITE CONDITIONS

A. The Contractor shall visit the Site prior to submission of their bid proposal to familiarize themselves with the existing conditions. Such conditions may affect the scope of work or the effort required to fulfill the intent of the design. Additional compensation due to lack of familiarization with these existing field conditions shall not be acceptable and shall not be honored.

1.09 SEQUENCING

A. The Contractor shall participate in all meeting necessary to assure the proper execution and sequencing of the installation.

1.10 SCHEDULING

A. All scheduling shall be coordinated with the master project schedule, and adapted as changes in the master schedule occur. Any deviations from the posted Master Schedule shall be approved by the Owner/Engineer or approved representative.

B. A copy of the schedule and any subsequent deviations shall be submitted to the Engineer at least once a week.

C. The Contractor shall derive an initial schedule of completion that shall be the basis of coordination with the CM and the other trades on the project.

D. Upon execution of an agreement with the Contractor, the Contractor shall schedule a meeting with the CM, and any other required trades to re-work the schedule to be consistent with the expectations of the overall project. It shall be the responsibility of the PM to perform weekly reviews of the schedule with the CM to modify the schedule and subsequent Work requirements and logistics to remain coordinated with the overall effort of the Project. Should the PM be unable to maintain this coordination for reasons of lack of Material availability or other external reason, it shall be the responsibility of the PM to immediately notify the Engineer and Owner, or Owner's approved representative, so that appropriate action may be taken.

E. The PM shall keep written track of all progress of the project, including, but not limited to, Material orders and procurement, mobilization, staffing requirements and installation status. This progress shall be tabulated and submitted to the Engineer on a weekly basis. The format of this table shall be submitted to the Engineer for approval, and shall be in Excel 2000, or greater, format.

F. Should Sub-Contractors be utilized on the project, their information shall be incorporated both in the scheduling projects and status reports.

G. Any changes to the schedule must be mutually agreed upon and shall be submitted in writing to the Engineer immediately upon the identification of the need to make said changes. Once the schedule has been changed any future adjustments, including those which would re-establish the original schedule, shall also be submitted in writing to the Engineer.

H. All Work shall be scheduled and completed within the normal progress of the project. Any additional work required by other trades that may be caused by the scheduling of this Contractor, shall be borne solely by the Contractor.

1.11 WARRANTY

A. All Systems, equipment, Materials and devices shall carry a minimum of a **two year warranty**. As indicated elsewhere in these documents, individual sections shall require warranty periods in excess of this length of time.

B. All warranties shall begin at the time of acceptance by the Owner of the entire project.

1.12 SYSTEM STARTUP

A. All Work shall include system startup by appropriate personnel. Where applicable, only individuals trained and certified by the manufacturer may authorize and or carry out such system startup. Personnel carrying out such startup shall keep written records of the procedures executed and subsequent results. A copy of such records and results shall be given to the Owner for their records prior to the application for final payment.

1.13 OPERATIONS AND MAINTENANCE MANUALS

A. The Contractor shall furnish four copies of Operations and Maintenance (O&M) Manuals prior to application for final payment.

B. The O&M Manuals shall be bound individually in a three ring binder that shall have sufficient space so as to allow the Owner to add materials to these.

C. The O&M Manual shall be identified and organized as follows:

1. Cover/Outside of Binder

   a. The cover shall consist of a plastic sheeting installed by the binder manufacturer that shall allow 8.5” x 11” sheets to be installed in both the front and back of the binder, as well as the width of the spine by 11” on the spine of the binder.

   b. The front of the binder shall contain the following information laser printed on a minimum of 32lb. stock paper. This information shall be centered horizontally on each line. All names shall be in a font twice the size of the subsequent information. The information shall be as follows:

2. The Project name, address, phone number and logo of the Owner

3. The data of Owner’s acceptance

4. The Engineer’s name, address, phone number and logo

5. The Contractor’s name, address, phone number and logo

   a. The back of the binder shall contain the name of the prime contractor in Arial 10 pt. centered along the bottom of the page.

   b. The Spine of the binder shall contain the words “Technology Systems Operations and Maintenance Manual”. Should the manual require more than one binder, each binder shall be labeled with “Volume (number) of (number)”. All printing shall be large enough for easy recognition, and a minimum of ½”.

6. Inside

   a. The inside of the binder(s) shall be divided into an index and one section for each system and/or specification section.

   b. Each section and subsection shall be separated by a manufactured tabbed divider sheet which clearly indicates the name or number of the section on the tab. Section tabs shall be easily discernible from subsection tabs, and shall have a more prevalent visual appearance than subsections.

   c. Where multiple volumes are required, the index shall be organized as follows:

7. The complete index shall be included in each volume.

8. The index shall be organized so as to group the contents of each volume.

9. Each group shall be clearly indicative of the volume in which it is contained.

10. The header of the index shall clearly indicate the volume in which you are currently viewing the index.

    a. Each section shall include subsections that shall be logically organized, and, where applicable, shall include but not be limited to the following information:

       1) A copy of the manufacturer's warranty, including effective dates of commencement and completion of warranty coverage, and contact information for the manufacturer(s)

       2) The system's project specific installation diagrams, both electronic and hard copies, including all field modifications occurring during the installation process, i.e. record drawings for that system.

       3) Manufacturer's Data Sheets

       4) Manufacturer's Installation, Operations and Maintenance Instructions

       5) Suggested Spare Parts List, and project specific maintenance requirements

       6) Startup, commissioning and field test results electronic copies, both electronic and hard copies

       Note: All electronic documentation shall be recorded onto CR-ROM in a format either readily accessible to Microsoft Office, AutoCAD or Adobe Acrobat Reader, or through an application specific viewing software for the testing device utilized for the testing of the system or infrastructure. The Contractor shall provide either on the CD or on a stand alone CD and applications specific reading software that may be required at no additional cost to the Owner. Should said software be licensed on a per seat basis, the Contractor shall provide a minimum of a four seat license, on for each copy of the manual.

1.14 MAINTENANCE

A. Extra Materials

1. The Contractor shall supply to the Owner, at the time of demonstration and training, all spare parts as required within these Documents. In addition to those items required elsewhere in these Documents, the Contractor shall provide a minimum of 10%, but not less than one complete item, of all expendable and/or replaceable items utilized for installation of the systems and equipment required in these Documents, such as fuses and filters.

2. The Contractor shall provide all spare parts in a means of containment that shall provide for an organized and protected storage of such Materials in close proximity to where they would be required.

PART 2 - PRODUCTS

2.01 GENERAL

A. All Base Bid submissions shall be derived from the provision of the Materials specified, or the alternatives listed.

B. All materials shall be new and U.L. Labeled for the Application.

C. For any Materials drawn or specified as being supplied by a single manufacturer, the Contractor shall provide said Materials as Drawn or Specified.

D. All manufacturers of the systems and infrastructure indicated shall verify to the satisfaction of the Contractor, Owner and Engineer that the systems and infrastructure as indicated on the Documents will function properly and perform as specified under the conditions indicated on these Documents. All parameters of the systems and infrastructure, including but not limited to, weight, dimensions, environmental conditioning, power, etc. shall be verified prior to shop drawing submittals.

E. All Materials shall be provided so as to fully enable the Owner to be afforded the maximum warranties available. This includes, but is not limited to, furnishing the Materials through manufacturers approved supply and distribution methods, and 100% of the installation, termination and commissioning, i.e. testing and documentation, by certified installation contractors where applicable.

2.02 MATERIAL SUBSTITUTIONS

A. No substitutions for the Materials specified shall be permitted without a formal written request for Material substitution.

B. Material substitutions, unless specifically indicated in writing by the Owner, Architect or Construction Manager in the Division 1 Specifications, or other governing front end documents, shall occur no later than two weeks prior to bid submission. The response to the request for substitution shall be returned no later than seventy two hours prior to the bid due date.

C. Material Substitution requests shall be assembled with information for both the specified item and the proposed item assembled in such a manner so as to make the comparison of the like parameters readily available and discernable. The Engineer reserves the right to reject any submission that does not comply with this requirement.

D. The Owner/Engineer reserves the right to deny any/all product substitution requests for any reason.

## PART 3 - EXECUTION

### 3.01 PERSONNEL REQUIREMENTS

A. Project Management

1. The Prime Contractor for this Division shall provide a Project Manager who, in addition to the requirements listed elsewhere in these Documents shall possess a current RCDD. Said certification shall remain current from the time of the submission of the copy during bidding and bid review through the project close out. This requirement shall not be fulfilled by a sub-contractor, sub-sub-contractor, vendor, manufacturer or manufacturer's rep. The RCDD must be a full time regular employee of the Contractor, and must be on the payroll at the time of the submittal of the bid form.

2. Should the scope of this either not require any structured cabling, or have multiple contracts let as a function of the method of bidding, each Contractor shall provide a person whose role shall fulfill that of the Project Manager described herein. For additional requirements of these persons, refer to the various section of the Specification.

3. The Contractor shall provide a Project Manager whose responsibility is the accurate and timely execution of this project. The PM shall have a minimum of five (5) years experience, of this five (5) years experience, a minimum of two (2) years experience shall be as a field installation technician, and a minimum of two (2) years shall be the management of projects and personnel consistent with this project.

4. The Project Manager shall be assigned to the project from the time of Contract Award until Project Close Out, including any time that may be required to resolve final punch list items.

5. The PM shall be the sole point of contact by the Engineer, Owner, CM, or other related personnel, for the duration of the project.

6. The PM shall be responsible for all reports and accountability of the Contractor to be supplied to the Engineer, Owner, CM or other related personnel.

7. Should the PM fail to execute his responsibilities as outlined herein, the Engineer, or Owner, shall retain the right to require the Contractor to provide a replacement for the PM. This replacement shall be approved in advance by the Engineer.

8. Should the Contractor not be able to provide a suitable PM, or if required, a replacement PM, the Owner shall retain the right to terminate the Contract Agreement with the Contractor.

B. Subcontractors

1. Where necessary, the Contractor may utilize qualified, and as applicable, certified Subcontractors. The Contractor shall prove the qualifications of the Subcontractor to the Owner and Engineer prior to executing any agreements either written or verbal. Such methods of proof shall be at the discretion of the Owner, and may include, but not be limited to, submissions of the same documentation as listed under the Contractor's Qualifications.

2. The Owner reserves the right for any reason to reject any Subcontractor. The Contractor shall then be required to provide an acceptable replacement Subcontractor. The qualifications of said replacement shall also be subject to verification prior to any agreement, written or verbal.

3. The Owner reserves the right to have a Subcontractor removed from the Project. Should removal of a Subcontractor be required, any replacement shall be subject to the aforementioned qualifications verification.

4. All Subcontractors must exist to provide viable outcome to the project. No Subcontractor may serve the sole purpose of providing Project Management, or providing a necessary certification only, e.g. A Project Manager shall not be Subcontractor may not serve the sole role of providing an RCDD to fulfill certification requirements.

5. No personnel employed by distributors, manufacturers representatives or other distribution channel organizations may be utilized for the provision of any required certifications, whether compensated financially or otherwise, e.g. A manufacturers Technical Support staff member may not be utilized to supply a required RCDD.

3.02 EXAMINATION

A. Site Verification of Conditions

1. Visit the site of the work and become familiar with the conditions affecting the installation. Submission of a proposal shall presuppose knowledge of such conditions and no additional compensation shall be allowed where extra labor or materials are required because of ignorance of these conditions.

2. Extra costs which might result from deviations from the Drawings, so as to avoid interferences, shall be considered a "Job Condition", and no additional compensation shall be considered applicable. In the event that such interferences occur in course of the Work, due to an error, omission, or oversight by the Contractor, no additional compensation shall be allowed. Interferences that may occur during the course of construction shall be brought to the immediate attention of the Architect and Engineer, and the Architect and Engineer's decision, confirmed in writing, shall be final.

3.03 INSTALLATION

A. Coordination

1. The Contractor shall actively participate in the coordination efforts of all trades to assure both the proper execution of these Contract Documents, and the execution of the associated trades. Any deviation from the intent of these Documents caused by these coordination efforts shall be approved in writing by the Engineer prior to execution. The need for such changes shall be brought to the immediate attention of the Engineer for resolution.

2. The Contractor become familiar with the Contract Documents of the other trades, and shall adjust, as necessary, the layout of the associated technology devices, equipment and cabling so as to maintain the intent of the Documents and be compatible with the other trade's Documents.

3. The Contractor shall monitor the progress and Work of all trades that may have impact on the execution of the Documents. The Contractor shall bring attention to all Work by other trades that may have detrimental effect on the outcome of this Contractor to the immediate attention of the CM and the Engineer. Any rework required by lack of action by the Contractor on this behalf shall be borne by the Contractor, and shall be completed so as to be complaint with the original applicable Drawings and Specifications.

4. Devices and equipment not specifically dimensioned and located on the Documents shall be oriented so as to be both aesthetically consistent with the devices, equipment and other architectural elements in its' general proximity, and consistent with the standard practices and workmanship of this types of installation.

5. Do not install in, or attach to, the work of any other trade that is deficient or otherwise incomplete, unless by doing so, the completion of work by the other trades is not impeded or prevented.

6. Do not obstruct access to, or the installation of, other trades.

7. Prior to the commencement of Work, provide the Electrical and Mechanical Contractors with reproducible marked up prints indicating all locations where technology devices and equipment interact with any mechanical, plumbing and electrical equipment. Refer to the Mechanical, Electrical and Architectural specifications for additional requirements.

8. Review the layout of other trades for devices and/or equipment that are to be located within any Telecommunications or Low Voltage Equipment Spaces. Inform the Engineer immediately of any occurrence of this nature. The Owner reserves the right to require the Technology Contractor to rectify any occurrence of this nature that has occurred after execution of the Contract with the Contractor that was not explicitly indicated on the related Contract Documents, the cost of which shall be borne by the Contractor.

B. Labeling

1. All cabling, equipment and related hardware shall be labeled by means of either a machine generated, or pre-printed label designed specifically designed for the application for which it is being utilized. All labels on cabling shall be self laminating and permanently affixed. Or, in cases where a device is mounted or installed in a permanent fashion, i.e. permanently attached to structure, provide an engraved phenolic tag. For additional information, refer to the various Specification Sections.

C. Record Drawings

1. The Contractor shall keep on the job site one complete set of drawings that shall be utilized an ongoing record of the job. Such drawings shall be maintained on a daily basis, and shall indicate all deviations from the Contract Documents.

2. The deviations indicated, at the completion of the project, shall be incorporated into the electronic files by the Contractor, and shall be submitted to the Engineer in both hard and electronic copies for approval, along with the original marked up set. These drawings shall be reviewed for general content and acceptability. Once approved, and returned to the Contractor, the Contractor shall make any necessary corrections, and submit one set, both electronic and hard, to the Engineer and one set, both electronic and hard, to the Owner.

3. Should, for whatever reason, the scope of this project be or become subdivided into multiple bid packages, it shall be the responsibility of the structured cabling contractor to produce, and submit, the Record Drawings. Any other contractor required, due to the subdivision of this package, shall provide the structured cabling contractor with the necessary electronic files necessary to insert this information in the master files, and produce these Record Drawings. All drawings, including but not limited to those submitted to the structured cabling contractor for inclusion in the submission, shall be in AutoCAD 2000 ".dwg" format. Each system and related cabling shall be on individual layers. The Contractors shall maintain the title blocks and other graphic representations of the Owner, Architect, Engineer and other Design team members present on the Documents. Any graphic or written representation of the Contractor shall be incorporated so as not to exceed the size of any individual aforementioned design team member.

D. Codes and Fees

1. The Contractor shall secure and pay for any and all permits and fees required by the execution of this project, including but not limited to, any and all periodic inspections that may be required. At the time of job completion, the Contractor shall turn over to the Owner, at no additional cost, all certificates of inspection, approval and occupancy. Such submission to the Owner shall be a condition of job close out and completion.

2. The Contractor shall provide all necessary notices of progress and completion to all required authorities so as to assure compliance with all codes and regulations.

E. System And Service Shutdown

1. The Contractor shall provide sufficient notice to the Owner and Engineer of any required system or service shutdown. Unless previously agreed to in writing by the Owner and Engineer, such notifications shall occur a minimum of two weeks in advance. The Owner reserves the right to require longer lead times in shutdowns. The Contractor shall review these lead times with the Owner and Engineer prior to commencement of work.

2. Systems and services routed through areas of construction and/or demolition shall be identified in advance and protected during construction. Should any trade be required to perform work that may jeopardize these systems or services the Owner shall be made aware of this jeopardy. The Contractor shall make this known to all trades in writing. A copy of this notification shall be forwarded to the Engineer at the time of distribution.

3. All efforts required for the coordination or performance of these systems or service shutdowns, including but not limited to any premium time compensation, shall not garner additional compensation from the Owner.

3.04 REPAIR AND RESTORATION

A. All cutting and patching in during normal construction, as well as any retrofit construction, necessary for installation of this work shall by the responsibility of this Division. Have cutting done by skilled mechanics as carefully as possible and with as little damage as possible. Do not cut any structural member without specific permission from the Architect.

B. The Technology Contractor shall assume removing existing ceiling to install new work and replacing with existing or new ceilings as required for installation of all work under this Division. These areas include spaces not only in the new work, but areas in the existing building where the Contractor is required to install new work. Damaged tiles shall be replaced with new tiles. Any tiles removed from the customer stock shall either be replaced with an exact replacement, or the Owner shall be reimbursed for the Owner's full cost of the materials including any shipping costs incurred.

3.05 REINSTALLATION

A. Any equipment removed and relocated, or removed and re-installed shall be cleaned, and retested as if new. Replace any expendable devices or accessories with new replacements, e.g. change out filters.

3.06 FIELD QUALITY CONTROL

A. The Contractor's PM shall remain abreast of project progress and perform periodic walk through of work in progress and/or complete. During such walk thru's, the PM shall prepare internal punch lists indicating all Material or labor inadequacies or inaccuracies. All such items shall be corrected promptly. The Engineer reserves the right to review and/all such internal punch lists at the Engineer's discretion.

B. The Engineer reserves the right to periodically perform walk thru's. During such times, the Engineer may create punch lists which shall be corrected promptly.

C. All design work has been engineered so as to be completely compliant with all applicable codes and standards. Should actual field conditions require the non-adherence to any code or standard, the Contractor shall determine an acceptable alternative that will allow the installation to regain compliance, and contact the Engineer immediately to discuss this situation and advise of the alternatives determined by the Contractor.

D. The Contractor shall inspect all cabling pathways prior to close out, and correct any anomalies that may have occurred, such as pathways inappropriately modified by other trades.

3.07 ADJUSTMENTS

A. All devices and equipment with the capability of tuning, adjustment or calibration shall be set to the desired optimum configuration prior to the Owner training and project completion.

3.08 CLEANING

A. All devices and equipment shall be wiped, swept and, where appropriate, washed to remove all traces of the construction environment. Such cleaning shall include, but not be limited to all points of user interface, racks, cabinets, patch panels, wall fields, equipment, devices, related hardware and Technology Space floors. All cabling pathways shall be inspected by the Contractor, and any/all debris shall be removed prior to final close out.

B. All areas subject to personnel traffic by the Contractor shall be completely cleaned.

C. All areas where the Contractor stores tools and Materials shall be fully cleaned, such that any user will be unable to be aware that the area had been used for the storage of tools and Materials.

3.09 DEMONSTRATION

A. The Owner shall have each system demonstrated to, at a minimum, the Engineer showing the complete operability of the system and/or infrastructure prior to Acceptance by the Owner.

B. The Owner shall be trained on the systems and infrastructure. For additional training requirements, refer to the various Specifications Sections. All training shall be video taped in its' entirety on standard VHS tape, and turned over to the Owner at no additional cost.

3.10 PROTECTION

A. All existing Materials, equipment, devices, cabling and related hardware remaining in place shall be protected from damage during the construction project. Any Materials, equipment, devices, cabling and related hardware damaged during the course of the project shall be replaced by new items that match exactly, or are greater product. All financial liability for this replacement, including but not limited to, the required labor by a properly certified individual, shall be borne by the Contractor.

B. All Materials, equipment, devices and related hardware being removed and relocated, in addition to be protect as defined in the previous paragraph shall be stored while waiting to be re-installed, in such a fashion so as to protect the Materials, equipment, devices, and related hardware from damage. Any items requiring replacement shall be replaced by new items that match exactly, or are greater product.

C. During the course of the project, the Contractor shall, on a regular basis, protect and inspect the work previously completed or in progress. The Contractor shall correct any work that has become unacceptable or below standard. Such corrective measures shall be the financial responsibility of the Contractor until the time of Owner acceptance.

3.11 SCHEDULE

A. The Contractor shall be liable to follow the ongoing construction schedule as defined and managed by the Construction Manager.

B. The Contractor shall remain abreast of any changes to the schedule and assess the ability to maintain the schedule with the changes indicated. The Contractor shall immediately make the Engineer aware of said changes.

END OF SECTION 27 05 00

THIS PAGE LEFT INTENTIONALLY BLANK

DIVISION 27
TECHNOLOGY

# SECTION 27 05 04
# PATHWAYS FOR COMMUNICATIONS

## PART 1 - GENERAL

### 1.1 SECTION INCLUDES

A. This section includes the requirements the pathways and related hardware for the Technology portion of the project. Should conflicts arise between this portion of the installation requirements and those required by the Electrical Specifications, the Contractor shall utilize the more stringent installation requirements. Should conflicts arise between the materials specified for the electrical systems and the technology/communications system, the contractor shall utilize those materials as specified in this section.

B. Items covered in this Section include, but are not limited to,

1. Conduits
2. Boxes

### 1.2 RELATED SECTIONS

A. Division 26 – Electrical.

B. Division 27 – Technology and Communications Systems

### 1.3 REFERENCES

A. Uniform Building Code published by ICBO.

B. Standard Building Code published by SBCCI.

C. National Building Code published by BOCA.

D. International Building Code published by ICC.

E. Underwriters Laboratories Inc. (UL) – Fire Resistance Directory

F. National Fire Protection Association (NFPA) – NFPA 101: Life Safety Code.

G. National Fire Protection Association (NFPA) – NFPA 70: National Electrical Code.

1.4 SUBMITTALS

A. All submittals shall conform completely with the requirements of the Contract Documents.

B. Product Data

1. For each product specified herein, provide manufacturer's standard catalog data for specified products demonstrating compliance with referenced standards. Where multiple choices are listed on the Product Data Sheets, clearly indicate the product being submitted.

C. Shop Drawings

1. The Contractor shall provide detailed shop drawings for the following:

a. Drawings of any floor-boxes with details of the various internal faceplates and their respective contents.
b. Drawings of any through floor fittings with details of their contents.
c. Layout drawings for cable tray and cable runway (1/16" scale minimum) based on trade coordination efforts indicating anticipated routings based on the coordination among the various trades.

D. Samples

1. The Engineer reserves the right to request, and have submitted, additional samples, or samples not explicitly requested within these Documents.
2. Samples required under this section include, but are not limited to:

E. None

1.5 DELIVERY STORAGE AND HANDLING

A. Delivery:

1. Manufacturer's original, unopened, undamaged containers, identification labels intact identifying product and manufacturer, date of manufacture; lot number; shelf life, if applicable; qualified testing and inspection agency's classification marking; and mixing instruction for multi-component products.
2. Handle and store products according to manufacturer's recommendations published in technical materials. Leave products wrapped or otherwise protected and under clean and dry storage conditions until required for installation.

B. Storage and Protection:

1. Store materials protected from exposure to harmful weather conditions and at temperature and humidity conditions recommended by manufacturer.

1.6 PROJECT/SITE CONDITIONS

A. The SCC shall become and remain familiar with all project/site conditions that may have impact on the timing, quality and/or quantity of Materials for the project. The SCC shall coordinate their efforts with changes in the Project/Site conditions so as to optimize the installation for the Owner.

B. Any additional efforts by the SCC due to a lack of awareness of project/site conditions shall not garner any additional compensation from the Owner, Engineer or Owner's authorized representative.

1.7 SEQUENCING

A. The SCC shall become and remain aware of the overall sequencing of the project. The SCC shall utilize this information to coordinate the efforts of the SCC's personnel on site so as to minimize the impact on the other trades and any current and future progress and/or completion of the project.

1.8 SCHEDULING

A. The SCC shall create a total project schedule which shall be coordinated with the Owner's, and Owner authorized representative's overall project schedule. This schedule shall be adjusted as necessary by the progress of the job both by the SCC and the overall project schedule. The SCC shall forward copies of this schedule to the Engineer, both upon its initial completion and at any point of modification during the course of the project.

B. The SCC PM shall apprise the Engineer on a weekly basis of the progress of the project in relation to the SCC's schedule and the overall project schedule.

1.9 COORDINATION

A. Coordinate construction of pathways and rough-in with the Owner and other trades to adapt appropriately to the overall construction schedule.

B. Provide drawn coordination as outlined for the general MEP trades elsewhere in these Documents.

C. All continuous pathways, i.e. conduit, cable tray, raceway, etc., required to support the cabling shall be provided by the Electrical Contractor under Division 16 unless indicated otherwise in the Contract Documents.

D. All non-continuous, or non-rigid pathways, i.e. J-hooks, inner-duct, etc., required to support the cabling shall be provided by the SCC under the Structured Cabling System, unless indicated otherwise in the Contract Documents.

E. All cable tray and related pathway hardware built into Telecommunications Spaces shall be provided by the SCC.

## PART 2 - PRODUCTS

### 2.1 MATERIALS

A. Telecommunications Backboards

1. Telecommunications Backboards shall be provided as shown on the Drawings, and shall be 4’ wide x 8’ high x ¾ “ thick AC plywood, painted with (2) coats of fire retardant white paint on both sides prior to installation. Backboards shall be mounted 6" above the finished floor with the blemish free side, or "A" side" facing the user, unless otherwise noted on the Drawings. The receptacles shown on the boards shall be mounted at 18 inches above the finished floor, unless otherwise noted, and shall be installed in surface mounted, single gang outlet boxes with stamped, sheet metal cover plates.
2. Failure to paint or mount the backboard as indicated herein shall be corrected by removing all equipment and devices mounted to the backboard, making all necessary corrections, retouching all paint on the backboard and mounting and/or painting the backboard as specified. Any blemishes shall be corrected so as to provide backboard in like new condition, at the discretion of the Engineer. All corrective actions shall be completed be borne by the Contractor. All equipment being removed and remounted shall be completed by the provided of said equipment so as to not void any warranties, and assure no damage to the devices and/or equipment.

B. Boxes and Conduit

1. All boxes and conduit shall be new and UL listed.
2. All boxes and conduit shall be as specified under the Division 26 specifications.

## PART 3 - EXECUTION

### 3.1 EXAMINATION

A. Examine all hardware both furnished by this Contractor and by other contractors. All hardware provided by this Contractor shall be new and damage free without any potential sources of damage to the cabling routed over or through this hardware.

B. Replace any/all hardware that appears to be capable of damaging the cabling either during installation or normal use.

### 3.2 INSTALLATION

A. Telecommunications pathways, spaces and metallic raceways, which run parallel with electric power or lighting cables or conduits, which is less than or equal to 480 Vrms, shall be installed with a minimum clearance of 50 mm (2 inches).

B. The Contractor shall provide all devices for routing the cabling as indicated on the Drawings, and as required by the manufacturer of the Structured Cabling System, so as to maintain the long term health and operability of the Structured Cabling System.

C. All horizontal pathways shall be designed, installed and grounded to meet applicable local and national codes.

D. Boxes and Conduit

1. All boxes and conduits shall be grounded, and installed per NEC, as well as any other applicable local, state or federal regulations and codes.
2. All conduit and box materials shall be designed for the environment in which it is to be installed.
3. Boxes

   a. All boxes, unless otherwise specifically indicated on the Drawings, shall be 4-11/16" square by 2-1/8" deep, with a single gang plaster ring of appropriate depth for the wall material utilized in the application.
   b. All boxes shall be installed square and have the plaster ring mounted so that it is 2" wide by 4" tall, unless approved by the Engineer.
   c. Where pullboxes are utilized, conduits shall enter and exit the box on opposite sides of the box. The box shall not be used as the turning point of the cable.

4. Conduit

   a. All conduit shall be a minimum of 1", unless otherwise noted on the Drawings.
   b. Conduit routes shall meet the following criteria:

      1) No conduit bend shall exceed 90º.
      2) No conduit route shall have more than two bends.
      3) Continuous conduit runs installed by the Electrical Contractor shall not exceed 30.5 m (100 ft) or contain more than two (2) 90º bends without utilizing appropriately sized pull boxes, unless otherwise indicated in these Specifications or on the Drawings. The Technology Contractor shall verify the proper installation technique and sizing of the raceway system with the Electrical Contractor prior to installation of the cabling. Conduit routes exceeding 30.5 m (100 ft) or requiring more than (2) 90º bends shall have the conduit size increased by one trade size. Under no circumstances shall any conduit route exceed 150 feet without the express written consent of the Engineer.

   c. All conduit sleeves shall be a minimum of 2" (trade size), unless otherwise indicated on the Drawings.
   d. All conduits 2" or less shall have a minimum bend radius of six times the internal diameter.
   e. All conduits greater than 2" shall have a minimum bend radius of 10 times the internal diameter.
   f. All conduits shall be reamed to clean out all potential rough edges in the end of the conduit.

g. All conduits shall be terminated with a non-metallic bushing.
h. All conduits shall be left with a pullstring with a minimum test rating of 200 lbs. (90kg) after installation.
i. All conduits shall be sufficiently braced so as to prevent the creeping and swaying of the conduit during installation of the cabling. All conduit shall be equipped with appropriate seismic bracing where applicable and required by local building codes or the local authority having jurisdiction.
j. Flexible conduit shall not be used without the express written consent of the Technology/Communications Engineer, and shall only be used where it is the only plausible answer to a conduit route. Flexible conduit for technology/communications may not be utilized as a cost savings exercise. If flexible conduit is approved for use, the Electrical Contractor shall increase the designed size of the conduit by one trade size.
k. Conduits installed below grade, and not within a sealed facility shall be cleaned, dried and capped until used.
l. All below grade conduits shall be constructed by means of continuous non-sliced runs of high density poly-ethylene (HDPE) piping.
m. All conduit stubs shall be terminated a minimum of 1" and a maximum of 3" from the point of penetration.

5. In Floor Service Boxes shall utilize a minimum of a 1" conduit. In Floor Service box conduits shall be individual home runs, and shall at no cost be daisy chained, i.e. configured so that a box feeds another box, unless explicitly indicated on the Drawings.

## 3.3 FIELD QUALITY CONTROL

A. Keep areas of work accessible until inspection by authorities having jurisdiction.
B. Where deficiencies are found, repair products so they comply with the Construction Documents.
C. Install work in full accordance with the rules, regulations, and safety requirements of Federal, State, County and City authorities having jurisdiction over premises. Do not construe this as relieving Contractor from compliance with any requirements of the Specifications which are in excess of Code requirements and not in conflict therewith.
D. Correct unacceptable workmanship and, as necessary, provide additional inspection to verify compliance with this Specification at no additional cost to the Owner or the Owner's appointed representative.

## 3.4 ADJUSTING AND CLEANING

A. Remove equipment, materials, and debris, leaving area in undamaged, clean condition.
B. Clean all surfaces adjacent to sealed openings to be free of excess fire-stopping materials and soiling as work progresses.

END OF SECTION 27 05 04

DIVISION 27
TECHNOLOGY

SECTION 27 05 05
TECHNOLOGY FIRE STOPPING

PART 1 - GENERAL

1.01 SECTION INCLUDES

A. This section includes the fire safety requirements for the Technology portion of the project. Should conflicts arise between this portion of the requirements and those required by the Architectural Specifications, the Contractor shall utilize the more stringent requirements.

B. Items covered in this Section include, but are not limited to,

1. Firestopping of Through Penetrations in Fire Rated Assemblies.
2. Smoke Seals.
3. Construction enclosing compartmentalized areas.

1.02 RELATED SECTIONS (Available upon request

A. Section 03300 – Cast In Place Concrete: Sleeves and blockouts in concrete assemblies.

B. Section 04800 – Masonry Assemblies: Sleeves and blockouts in masonry assemblies.

C. Section 07210 – Building Insulation.

D. Section 07810 – Applied Fireproofing.

E. Section 07900 – Joint Sealers.

F. Section 09250 – Gypsum Board.

G. Division 26 – Electrical: Electrical work requiring firestopping.

1.03 REFERENCES

A. ASTM E 84, “Surface Burning Characteristics of Building Materials”.

B. ASTM E 119, “Fire Tests of Building Construction and Materials”.

C. ASTM E 814, “Fire Tests of Through Penetration Firestops”.

D. ANSI/UL263, “Fire Tests of Building Construction and Materials”.

E. ANSI/UL723, “Surface Burning Characteristics of Building Materials”.

F. ANSI/UL1479, “Fire Tests of Through Penetration Firestops”.

G. Uniform Building Code published by ICBO.

H. Standard Building Code published by SBCCI.

I. National Building Code published by BOCA.

J. International Building Code published by ICC.

K. Underwriters Laboratories Inc. (UL) – Fire Resistance Directory

L. National Fire Protection Association (NFPA) – NFPA 101: Life Safety Code.

M. National Fire Protection Association (NFPA) – NFPA 70: National Electrical Code.

1.04 PERFORMANCE REQUIREMENTS

A. Fire rated pathway devices shall be the preferred product and shall be installed in all locations where frequent cable moves, adds and changes will occur.

B. Where non- mechanical products are utilized, provide products that upon curing do no re-emulsify, dissolve, leach, breakdown or otherwise deteriorate over time from exposure to atmospheric moisture, sweating pipes, ponding water or other forms of moisture characteristic during or after construction.

C. Where it is not practical to use a mechanical device, openings within floors and walls designed to accommodate telecommunications and data cabling shall be provided with re-enterable products that do not cure or dry.

D. Openings for cable trays shall be sealed using re-enterable firestopping pillows.

1.05 SUBMITTALS

A. All submittals shall conform completely with the requirements of the Contract Documents.

B. Product Data

1. For each type, provide manufacturer's standard catalog data for specified products demonstrating compliance with referenced standards and listing numbers of systems in which each product is to be used.

C. Shop Drawings

1. Submit schedule of opening locations and sizes, penetrating items, and required listed design numbers to seal openings to maintain fire resistance ratings. Show typical installation details including:

a. Minimum and maximum allowable annular spacing
b. Base material composition
c. Firestop materials selected
d. Applied thickness required to achieve the hourly rating

D. Certificates

1. Submit product certificates signed by firestop system manufacturer certifying material compliance with applicable code and specified performance characteristics.

E. Installation Instructions

1. Submit manufacturer's printed installation instructions.

1.06 QUALITY ASSURANCE

A. Products/Systems: Provide firestopping systems that comply with the following requirements:

1. Firestopping tests are performed by a qualified, testing and inspection agency. A qualified testing and inspection agency is UL, or another agency performing testing and follow-up inspection services for firestop system acceptable to authorities having jurisdiction.
2. Firestopping products bear the classification marking of qualified testing and inspection agency.

B. Installer Qualifications: Experience in performing work of this section who is qualified by the firestopping manufacturer as having been provided the necessary training to install firestop products in accordance with specified requirements.

1.07 DELIVERY, STORAGE, AND HANDLING

A. Delivery:

1. Manufacturer's original, unopened, undamaged containers, identification labels intact identifying product and manufacturer, date of manufacture; lot number; shelf life, if applicable; qualified testing and inspection agency's classification marking; and mixing instruction for multicomponent products.
2. Handle and store products according to manufacturer's recommendations published in technical materials. Leave products wrapped or otherwise protected and under clean and dry storage conditions until required for installation.

B. Storage and Protection:

1. Store materials protected from exposure to harmful weather conditions and at temperature and humidity conditions recommended by manufacturer.

1.08 PROJECT CONDITIONS

A. Do not install firestopping products when ambient or substrate temperatures are outside limitations recommended by manufacturer.

B. Do not install firestopping products when substrates are wet due to rain, frost, condensation, or other causes.

C. Maintain minimum temperature before, during, and for a minimum 3 days after installation of materials.

D. Do not use materials that contain flammable solvents.

E. Coordinate construction of openings and penetrating items to ensure that through-penetration firestop systems are installed according to specified requirements.

F. Coordinate sizing of sleeves, openings, core-drilled holes, or cut openings to accommodate through-penetration firestop systems.

G. Schedule installation of firestopping after completion of penetrating item installation but prior to covering or concealing of openings.

1.09 WARRANTY

A. Contractor shall provide written certification that all firestopping was installed in accordance with the manufacturer's written instructions for UL tested assemblies and that all firestop systems installed meet the firestopping requirements as herein specified.

1.10 COORDINATION

A. Coordinate construction of openings and penetrating items to ensure that through-penetration firestop systems are installed according to specified requirements.

B. Coordinate sizing of sleeves, openings, core-drilled holes or cut openings to accommodate through-penetration firestop systems.

C. Schedule installation of firestopping after completion of penetrating item installation but prior to covering or concealing of openings.

1.11 PROTECTION

A. Where firestopping is installed at locations which shall remain exposed in the completed work, provide protection as necessary to prevent damage to adjacent surfaces and finishes, and protect as necessary against damage from other construction activities.

PART 2 - PRODUCTS

2.01 MANUFACTURERS

A. Single Source: Obtain firestop systems for each type of penetration and construction condition indicated only from a single manufacturer.

B. Acceptable manufacturers shall be:

1. Specified Technologies, Inc. (STI) Somerville, NJ 08876
2. Tremco, Inc., Beachwood, OH
3. Hilti, Inc., Tulsa, OK

2.02 MATERIALS

A. General: Use only firestopping products that have been tested for specific fire resistance rated construction conditions conforming to construction assembly type, penetrating item type, annular space requirements, and fire rating involved for each separate instance.

B. Fire Rated Cable Pathways: STI EZ-PATH™ Brand device modules comprised of steel raceway with intumescent foam pads allowing 0 to 100 percent cable fill, the following products are acceptable:

1. Specified Technologies Inc. (STI) EZ-PATH™ Fire Rated Pathway
2. Or equivalent product by Tremco or Hilti

C. Latex Sealants: Single component latex formulations that upon cure do not re-emulsify during exposure to moisture, the following products are acceptable:

1. Specified Technologies Inc. (STI) SpecSeal® Series SSS Sealant
2. Specified Technologies Inc. (STI) SpecSeal® Series LCI Sealant
3. Or equivalent product by Tremco or Hilti

D. Firestop Putty: Intumescent, non-hardening, water resistant putties containing no solvents, inorganic fibers or silicone compounds, the following products are acceptable:

1. Specified Technologies Inc. (STI) SpecSeal® Series SSP Putty
2. Or equivalent product by Tremco or Hilti

E. Firestop Pillows: Re-enterable, non-curing, mineral fiber core encapsulated with an intumescent coating contained in a flame retardant poly bag, the following products are acceptable:

1. Specified Technologies Inc. (STI) SpecSeal® Series SSB Pillows
2. Or equivalent product by Tremco or Hilti

## PART 3 - EXECUTION

### 3.01 EXAMINATION

A. Before beginning installation, verify that substrate conditions previously installed under other sections are acceptable for installation of firestopping in accordance with manufacturer's installation instructions and technical information.

B. Surfaces shall be free of dirt, grease, oil, scale, laitance, rust, release agents, water repellants, and any other substances that may inhibit optimum adhesion.

C. Provide masking and temporary covering to protect adjacent surfaces.

D. Do not proceed until unsatisfactory conditions have been corrected.

E. Verify that environmental conditions are safe and suitable for the installation of the firestop products.

### 3.02 INSTALLATION

A. General: Install through-penetration firestop systems in accordance with Performance Criteria and in accordance with the conditions of testing and classification as specified in the published design.

B. Manufacturer's Instructions: Comply with manufacturer's instructions for installation of firestopping products.

C. All firestopping shall be installed in accordance to the UL rated system designed for the application.

D. Sleeves and core-drilled holes shall be sized at least 1-1/2" larger in diameter than penetrating items.

E. Installation of firestops shall be performed by applicators/installers qualified and trained by the Manufacturer.

F. Coordinate with plumbing, mechanical, electrical and other trades to assure that all conduits, raceways, cables, cable trays, and other equipment which penetrate fire rated construction have been permanently installed prior to installation of firestops. Schedule and sequence the work to assure that partitions and other construction which would conceal penetrations are not erected prior to the installation of firestop.

G. Gun grade sealants and putties shall be tooled into place to insure proper adhesion to penetrations and surrounding surfaces.

3.03 FIELD QUALITY CONTROL

A. Keep areas of work accessible until inspection by authorities having jurisdiction.

B. Where deficiencies are found, repair firestopping products so they comply with requirements.

C. Install work in full accordance with the rules, regulations, and safety requirements of Federal, State, County and City authorities having jurisdiction over premises. Do not construe this as relieving Contractor from compliance with any requirements of the Specifications which are in excess of Code requirements and not in conflict therewith.

D. Correct unacceptable firestopping and provide additional inspection to verify compliance with this Specification at no additional cost.

E. Finish surfaces of firestopping that is to remain exposed in the completed work to a uniform and level condition.

3.04 ADJUSTING AND CLEANING

A. Remove equipment, materials, and debris, leaving area in undamaged, clean condition.

B. Clean all surfaces adjacent to sealed openings to be free of excess firestopping materials and soiling as work progresses.

3.05 SCHEDULES:

| | Concrete Floor | Concrete Wall | Gypsum Board Wall |
|---|---|---|---|
| Penetrant Type | | | |
| Blank Opening | C-AJ-0100,<br>C-AJ-0101 | C-AJ-0100,<br>C-AJ-101 | |
| Metal Conduits | C-AJ-1080,<br>C-AJ-1240,<br>C-AJ-1353 | C-AJ-1080,<br>W-J-1098,<br>W-J-1100 | W-L-1049,<br>W-L-1222,<br>W-L-1168 |
| Plastic Conduits/ Raceways | C-AJ-2140,<br>C-AJ-2292 | W-J-2018,<br>W-J-2076 | W-L-2093,<br>W-L-2241 |
| Cables | C-AJ-3214,<br>C-AJ-3231,<br>F-A-3015 | C-AJ-3214,<br>C-AJ-3231,<br>W-J-3098,<br>W-J-3099 | W-L-3218,<br>W-L-3219 |
| Cable Trays | C-AJ-4029 | W-J-4021,<br>W-J-4022,<br>W-J-4033 | W-L-4008,<br>W-L-4029,<br>W-L-4043 |

END OF SECTION 27 05 24

THIS PAGE LEFT INTENTIONALLY BLANK

DIVISION 27
TECHNOLOGY

# SECTION 27 05 26
# TECHNOLOGY GROUNDING SYSTEM

## PART 1 - GENERAL

### 1.1 SUMMARY

A. This Section includes the requirements for an isolated grounding system that shall be utilized for the purposes of grounding the Technology and Communications systems of this project.

B. Section Includes

1. Busbars
2. Lugs
3. Grounding Accessories
4. Labeling Requirements

C. Products Installed but not Supplied by the Contractor

1. The Contractor shall be required to provide all bonding conductors and related hardware required to bond all technology and communications equipment to the Technology Grounding System. Unless specified elsewhere in these documents the Contractor shall bond the devices, equipment and related hardware to the closest available Technology Grounding Busbar (TGB) or to the Technology Main Grounding Busbar (TMGB).

D. Related Sections

1. Section 270501 – Communications Common Work Results
2. Division 26 - Electrical

### 1.2 REFERENCES

A. Codes, regulations and standards referenced in the Section are:

1. NFPA 70 – The National Electrical Code, including but not limited to, Article 250 Grounding and Bonding
2. NFPA 780 – Standard for the Installation of Lightning Protection Systems
3. ANSI J-STD 607-A – Commercial Building Grounding and Bonding Requirements for Telecommunications
4. BICSI TDMM – Telecommunications Distribution Methods Manual
5. TIA 942 (latest draft) -
6. IEEE 1100 – IEEE Recommended Practice for powering and Grounding Sensitive Electronic Equipment

1.3 DEFINITIONS

A. The Definitions contained within shall be in addition to those defined in Section 27 05 01 COMMUNICATIONS COMMON WORK RESULTS.

B. Definitions:

1. Bonding – The term "Bonding" shall refer to the permanent joining of electrical parts to form an electrically conductive path that ensures electrical continuity and the capacity to conduct safely any current that is likely to be exposed.
2. Bonding Conductor(BC) – The term "Bonding Conductor" shall mean a conductor used specifically for the purpose of bonding.
3. Building Grounding Electrode System – The term "Building Grounding Electrode System" shall mean the Grounding Electrode(s), and the Grounding Electrode Conductor(s).
4. Coupled Bonding Conductor (CBC) – The term "Coupled Bonding Conductor" shall mean a bonding conductor placed, e.g. strapped, on the outside of any technology cable, used to suppress transient noise.
5. Grounding Electrode (GE) – The term "Grounding Electrode" shall mean a device that establishes an electrical connection to the earth.
6. Grounding Electrode Conductor (GEC) – The term "Grounding Electrode Conductor" shall mean the conductor used to connect the grounding electrode(s) to the equipment grounding conductor, to the grounded conductor. Or to both, at the service, at each building or structure where supplied by a feeder(s) or branch circuit(s), or at the source or separately derived system.
7. Telecommunications Bonding Backbone (TBB) – The term "Telecommunications Bonding Backbone" shall mean a conductor that interconnects Telecommunications Grounding Busbars.
8. Telecommunications Main Grounding Busbar (TMGB) – The term "Telecommunications Main Grounding Busbar" shall refer to the primary busbar used to create the primary point of interconnection for the Technology Grounding System, and is the busbar bonded to the building electric service ground.
9. Telecommunications Grounding Busbar (TGB) - The term "Telecommunications Grounding Busbar" shall refer to any secondary busbar used to create the Technology Grounding System, and is fed from the TMGB.

1.4 SYSTEM DESCRIPTION

A. The Electrical Contractor shall provide the Technology Grounding System The Technology Grounding System is an isolated grounding system, consisting of busbars, cabling, lugs and other accessories as indicated on the Drawings.

B. The Electrical Contractor shall provide signage regarding the Technology Grounding System in accordance with the Specifications and Drawings.

C. The Technology Contractor shall bond technology equipment to the Technology Grounding System in accordance with the Specifications and Drawings.

D. The Technology Grounding System shall be a supplemental grounding system and shall be bonded to the Building Grounding Electrode System at the Grounding Electrode Conductor or other approved ground in accordance with Article 250 of the National Electrical Code (NEC) and all other related articles.

E. Distribution of the Technology Grounding System shall be in accordance with the Specifications and Drawings.

F. Each entrance facility, equipment room, telecommunications room and cross connect area shall be equipped with either the TMGB or a TGB

G. Each TGB shall be bonded to the TMGB.

H. All metallic cross connect hardware, pathways and related hardware, and other non-current carrying technology equipment shall be bonded to the local TGB.

I. Where copper cabling is routed to an area, either in another building, or with a separate electrical service, the Technology Contractor shall provide primary protective equipment.

J. All racks shall be assembled with paint piercing ground washers, grounding strip and bonding jumper as indicated on the Drawings.

1.5 SUBMITTALS

A. For additional requirements, refer to Section 27 05 01 – COMMUNICATIONS COMMON WORK RESULTS

B. Product Data Sheets

1. Product Data Sheets required under this Section's scope of work shall include:

a. Busbars
b. Busbar accessories
c. Conductors
d. Lugs
e. Labels
f. Tools
g. Accessories

C. Shop Drawings

1. Shop Drawings shall be submitted that indicate the Contractor's understanding of the exact location of busbars, the exact nature of the bonding requirements, the nature of the assembly requirements, and the location of any bonding points.
2. Shop drawings shall include any drawings indicating installation requirements of special tooling that is a function of these Specifications.

D. Samples

1. The Engineer reserves the right to request, and have submitted, additional samples, or samples not explicitly requested within these documents.
2. Samples required under this section include, but are not limited to:

   a. Crimps indicating the proper use of the die required to terminate the bonding conductors. This requirement shall be required by both the Electrical Contractor for the construction of the Technology Grounding System, and the Technology Contractor for the provision of the bonding conductors required under this Section.

1.6 QUALITY ASSURANCE

A. Qualifications

1. The Contractor shall possess and utilize the special tooling required to fulfill the requirements of this Section. Should training be required for the assurance of proper operation of these tools, the Contractor shall possess and submit a copy of this certification.
2. The Contractor shall have copies of, and adhere to the requirements of the standards indicated above.

B. Regulatory Requirements

1. All devices, Materials and equipment provided under the scope of this Section shall be new and UL listed for the application for which it is being utilized.
2. All Materials and practices shall be compliant with all local, state and federal regulations, as well as governing standards as indicated herein. The regulations include, but are not limited to, the:

   a. NEC
   b. NESC
   c. NFPA

3. The grounding system shall comply to the latest revisions of ANSI J-STD 607-A, shall not be connected so as to create pathways for circulating currents, and shall be constructed so as to complete the intent of the design as indicated on the Drawings. If for any reason a conflict arises between the Specifications and the Drawings, the Contractor shall bring this conflict to the immediate attention of the Engineer. The Engineer shall provide the sole resolution to any conflict. Should the Contractor acknowledge after the bidding, the financial responsibility of the resolution shall be born by the Contractor.

C. Samples

1. The Contractor shall supply one of each busbar, busbar ID placard, lug, connector and paint piercing bonding washer for inspection by the Engineer prior to installation. Such samples can either be shipped to the Engineer, or made available to the Engineer in the field.

1.7 PROJECT/SITE CONDITIONS

A. Conductors placed prior to the completion of other trades' work shall be enclosed in such a fashion so as to protect the conductors until such time that the Conductors shall be protected from damage caused by ongoing work. Any cabling damaged during construction shall be replaced in whole, including all requirements indicated for the initial installation of that Conductor, by the Electrical Contractor prior to Owner Acceptance. All financial responsibility for the replacement of damaged Conductors shall be borne by the Electrical Contractor.

1.8 SEQUENCING

A. The Contractor shall coordinate the installation of all Conductors, Busbars and related Materials with the Project Schedule to ensure that all of the aforementioned items are installed as intended by these Documents.

1.9 SCHEDULING

A. All Installation, terminating and testing of the Technology Grounding System shall be completed prior to the installation and commissioning of any of the related Technology Systems. The Electrical Contractor shall coordinate the timing of the installation with any of the related systems providers, so as to assure this timing.

1.10 WARRANTY

A. The Contractor shall provide a two year warranty for the materials and labor provided under the scope of this Section.

1.11 OPERATIONS AND MAINTENANCE MANUALS

A. The Contractor shall include the riser diagram and testing data from this system within a unique section of the Operation and Maintenance Manual.

PART 2 - PRODUCTS

2.1 GENERAL

A. All products shall be new and UL listed for the applications for which they are being utilized

2.2 MANUFACTURERS

A. Busbars and related hardware shall be manufactured by Erico, Harger or Panduit

B. Lugs shall be as manufactured by Panduit, T&B or 3M

C. HTAP shall be manufactured by Panduit, T&B or 3M

2.3 MATERIALS

A. Conductors

1. Conductors shall be as specified within the materials and methods of Division26, but shall be compliant with any additional requirements listed in this Section.

2.4 COMPONENTS

A. Busbars

1. All busbars shall be ¼" solid electro-tin plated copper.
2. All busbars shall be ASTM B187-C11000 compliant.
3. All busbars shall be UL and cUL listed to UL 467 and c22.2 respectively.

4. TGB

a. All TGB's shall:

1) be a minimum of 6" long,
2) have a minimum of 2 pairs of 5/16" holes, and
3) a minimum of 2 pairs of 7/16" holes.

b. Acceptable busbars shall be:

1) Harger TGBIP1426TGB
2) Equal by Panduit or Erico

B. Lugs

1. All lugs shall be UL listed for use up to 35kV, temperature rated to 90 degrees C and CSA certified to 600V.
2. All lugs shall be two hole and shall have a long barrel construction with sufficient length to allow for two discreet crimps.
3. All lugs shall be tin plated to inhibit galvanic corrosion.
4. All lugs shall be constructed with an inspection window to visually assure full conductor insertion.
5. All lugs shall be tested by Telcordia, and be NEBS level 3 compliant.
6. All lugs shall be compliant with ANSI J-STD-607-A.
7. Acceptable lugs shall be:

a. Panduit Code (Or Flex, depending on the conductor type) Conductor, Two Hole. Long Barrel with Window Lug
b. Equal by T&B or 3M

## PART 3 - EXECUTION

### 3.1 EXAMINATION

A. The Contractor shall inspect the point of bonding between the Technology Grounding System and the Building Grounding Electrode System. Verify the capability of the systems to perform as expected.

### 3.2 PREPARATION

A. Surface Preparation
   1. The Contractor shall prepare all bonding points by cleaning, and where applicable applying antioxidants prior to the installation of any ground lugs.

### 3.3 INSTALLATION

A. General

   1. Technology System grounding and bonding shall be in accordance with the NEC and NFPA. Horizontal Cables and equipment shall be grounded in compliance with ANSI/NFPA 70 and local requirements and practices. Horizontal equipment includes cross connect frames, patch panels and racks, active telecommunications equipment and test apparatus and equipment. When required by local code, and not explicitly indicated in the Contract Documents, provide a Telecommunications Bonding Backbone utilizing a # 6 AWG or larger bonding conductor to provide direct bonding between equipment located in a given area and the associated TGB. In this case, should a dedicated Technology Grounding System not be available, contact the Engineer for immediate resolution. Note that the Technology Grounding System shall be an independent system from the Building Grounding Electrode System with the exception of the bond to the Building Grounding Electrode System.
   2. The Technology Contractor shall bond all non-current carrying equipment provided by the Technology Contractor including, but not limited to, cable trays, racks, wall fields, protection devices, etc., to the local TGB.
   3. The Electrical Contractor shall bond all non-current carrying equipment provided by the Electrical Contractor including, but not limited to, cable trays, conduit, back boxes, etc., to the local TGB.

B. Busbars

   1. All busbars shall be located as indicated on the Drawings, and installed in accordance with manufacturer’s suggested installation practices.

C. Conductors

   1. All conduits routed through metallic conduit for greater the 12” shall be bonded to the conduit at both the point of entry and exit. The Contractor shall utilize HTaps and a #6 AWG wire to bond over to the conduit.
   2. The Contractor shall keep all cabling continuous throughout the length of the run.

3. Conductors 1/0 and greater shall make any required turns by means of a smooth bend whose radius a minimum of 48".
4. Conductors shall remain insulated from structure throughout the length of the runs other than that which is indicated on the Drawings. Should the conductor be required to route open architecture through a plenum rated space, and have an outer jacket that is not plenum rated, the Contractor shall utilize a bare conductor cable encased in a plenum rated innerduct.
5. Ground conductors routed below grade shall not be permitted to be run in a direct burial fashion. Ground conductors routed below grade shall be routed in a PVC conduit that is sized based on a 28% fill ratio.

D. Lugs

1. All lugs shall be installed per manufacturer's suggested installation practices, and shall meet the remaining criteria listed to the extent that it does not violate manufacturers installation procedures.
2. The Contractor shall insert cable completely into the lug prior to crimping the lug.
3. All lugs shall be affixed by applying two discreet crimps. The first crimp shall be made at the point on the crimp surface closest to the screw holes, with the second crimp being made closer to the cable entry.
4. Each crimp shall be made by means of a tool specifically designed for the purpose of crimping lugs, and having the capability of embossing the die number into the lug as the lug is crimped.
5. The Contractor shall utilize the appropriate embossing die. The die shall be positioned on the crimp as recommended by the manufacturer, and so the embossed die number is easily visible.

E. Labeling

1. Conductors/Cabling

   a. All cabling shall be labeled as to the source and destination room and busbar, as well as cable ID. Cable labeling shall be protected with a clear shrink tube covering as illustrated on the Drawings.

2. Busbars

   a. Each Busbar shall be labeled with the following information.

      1) Busbar name
      2) Source of ground
      3) Room being serviced
      4) Standard warning

   b. The label shall be a phenolic engraved placard with a black background and white letters.
   c. The label shall be screwed to the wall as indicated on the drawings utilizing the appropriate wall anchors for the type of surface to which the label is being applied.
   d. The label shall be located so as to be easily readable by a person of standard height standing in front of the busbar.

e. The standard warning shall be: "WARNING – The device is an integral part of the Technology Grounding System. Do not disconnect. Should any portion of this system require servicing, contact personnel at extension: <confirm number>"

3. Terminations

a. All terminations shall be by means of irreversible crimp. Contractor shall utilize a crimp tool that provides an imprint of the dye used. Use the appropriate dye as recommended by the manufacturer for the gauge and crimp selected.

3.4 FIELD QUALITY CONTROL

A. Site Test and Inspections

1. All grounding shall be tested to assure a ground impedance of less than or equal to 5 ohms.

B. Record Drawings

1. Actual installation results shall be documented and submitted with the entire Record Drawing set as outlined herein.

C. System And Service Shutdown

1. Should the Contractor need to shut down any system to perform any bonding, etc., the Contractor shall provide warning to the Owner as outlined elsewhere in these Documents.

END OF SECTION 27 05 26

DIVISION 27
TECHNOLOGY

# SECTION 27 10 00
# STRUCTURED CABLING SYSTEM

## PART 1 - GENERAL

### 1.01 SUMMARY

A. The Section defines the requirements for the installation of the structured cabling system. As described elsewhere in these Documents the system consists of twisted pair cabling and hardware, and related hardware. In addition to the basic cable plant requirements, the testing and identification requirements are also defined. Finally, the racks, enclosures, and pathway hardware is also defined herein.

B. Section Includes

1. Twisted Pair Cable
2. Fiber Optic Cable
3. Coax Cable
4. Patch Panels
5. Jacks
6. Faceplates
7. Patch Cords
8. Wire Management
9. Innerduct

C. Products Installed but not Supplied by the SCC

1. The SCC shall assist, where necessary, with the Owner's Radio Vendor to assure the seamless integration of the systems provided by this Vendor that must utilize cable plant and resources provided by the SCC. Verify the exact requirements of any assistance, either in labor required or Materials furnished and/or installed.

D. Related Sections

1. Section 27 05 00 – Communications Common Work Results
2. Division 27 05 05 – Firestopping

### 1.02 REFERENCES

A. NFPA 70 – The National Electrical Code

B. ANSI/TIA/EIA 568 – Commercial Buildings Telecommunications Cabling Standard

C. ANSI/TIA/EIA 569 – Commercial Building Standard for Telecommunications Pathways and Spaces

D. ANSI/TIA/EIA 606 – Administration Standard for the Telecommunications Infrastructure of Commercial Building

E. ANSI/TIA/EIA 607 – Commercial Building Grounding and Bonding Requirements for Telecommunications

F. BICSI TDMM – Telecommunications Distribution Methods Manual

1.03 DEFINITIONS

A. The Definitions contained within shall be in addition to those defined in Section 17050 TECHNOLOGY COMMON WORK RESULTS.

B. Definitions:

1. Backbone or Backbone Cabling – The term "Backbone" or "Backbone Cabling" shall mean a facility (e.g., pathway, cable, or conductors) between any of the following spaces: telecommunications rooms, common telecommunications rooms, floor-serving terminals, entrance facilities, equipment rooms, and common equipment rooms.
2. Basic Link – The term "Basic Link" shall mean a configuration of cabling utilized for testing purposes which consists of a Horizontal cable of up to 90 m (295 ft) plus up to 2 m (6.5 ft) of test equipment cord from the main unit of the tester to the local connection, and up to 2 m (6.5 ft) of test equipment cord from the remote connection to the remote unit of the tester. Maximum length is 94 m (308 ft). Contrast with permanent link test configuration.
3. Breakout Cable – The term "Breakout Cable" shall mean a multifiber cable where each optical fiber is further protected by an additional jacket and optional strength elements.
4. Bundled Cable – The term "Bundled Cable" shall mean An assembly of two or more cables continuously bound together to form a single unit. Contrast to hybrid cable
5. Buried Cable – The term "Buried Cable" shall mean a cable installed under the surface of the ground in such a manner that it cannot be removed without disturbing the soil.
6. Cable tray (CT) – The term "Cable Tray" shall mean, a support mechanism used to route and support telecommunications and other cable. Typically equipped with sides that allow cables to be placed within the sides over the tray's entire length.
7. Communications Plenum Rated Cable (CMP) – The term "Communications Plenum Rated Cable" shall mean cable which is listed as being suitable for use in ducts, plenums, and other spaces used for environmental air, and is also listed as having adequate fire-resistant and low smoke-producing characteristics per the NEC. The cables must also pass required test for fire and smoke characteristics of wires and cables, NFPA 262 or UL 910.
8. Communications Riser Rated Cable (CMR) – The term "Communcaitons Riser Rated Cable" shall mean cable which is listed as being suitable for use in a vertical run in a shaft or from floor to floor and shall also be listed as having fire-resistant characteristics capable of preventing the carrying of fire from floor to floor per the NEC. The cables must also pass requirements for flame propagation.
9. Delay Skew- The term "Delay Skew" shall mean the difference in propagation delay between any two pairs within the same cable sheath.
10. Demarcation Point (Demarc) – The term "Demarcation Point" shall mean the point of interface between service providers and customer facilities.
11. Direct Buried Cable – The term "Direct Buried Cable" shall mean a telecommunications cable designed to be installed under the surface of the earth, in direct contact with the soil. Contrast with underground cable.
12. Dispersion – The term "Dispersion" shall mean the loss of signal resulting from the scattering of light pulses as they are transmitted through a medium.

13. Entrance Facility (EF) – The term "Entrance Facility" shall mean an entrance to a building for both public and private network service cables, including wireless, including the entrance point at the building wall and continuing to the entrance room or space, or, a facility that provides all necessary mechanical and electrical services, that complies with all relevant regulations, for the entry of telecommunications cables into a building.
14. Equal level far-end crosstalk (ELFEXT) – The term "Equal Level Far End Crosstalk" shall mean crosstalk measured at the opposite end from which the disturbing signal is transmitted, normalized by the attenuation contribution of the cable or cabling.
15. Equipment Room (ER) – The term "Equipment Room" shall mean an environmentally controlled centralized space for telecommunications equipment that usually houses a main or intermediate cross-connect.
16. Far-end crosstalk (FEXT) – The term "Farm-end Cross Talk" shall mean a measure of the unwanted signal coupling from a transmitter at the near end into another pair measured at the far end, and relative to the transmitted signal level.
17. Ferrule – The term "Ferrule" shall mean the alignment sleeve portion of an optical connector used to protect and align the stripped fiber.
18. Fiber – The term "Fiber" shall mean a thin filament of glass or plastic that conducts a light signal.
19. Fiber optics – The term "Fiber Optics" shall mean a communications system that uses optical fiber as its medium.
20. Fusion splice – The term "Fusion Splice" shall mean a permanent joint accomplished by applying localized heat sufficient to fuse or melt the ends of two optical fibers together, forming a continuous single fiber.
21. Gas tube protector – The term "Gas tube protector" shall mean an overvoltage protector featuring metallic electrodes that discharge in a gas atmosphere within a glass or ceramic envelope.
22. Graded-index fiber – The term "Graded Index Fiber" shall mean an optical fiber design in which the refractive index of the core is lower toward the outside of the fiber core and increases gradually in layers toward the center of the core. The refractive index reflects the rays inward and allows them to travel faster in the lower index of refraction region. The purpose is to reduce modal dispersion and thereby increase fiber bandwidth.
23. Handhole – The term "Handhole" shall mean a structure similar to a small maintenance hole in which cable can be pulled, but not large enough for a person to fully enter to perform work.
24. Horizontal Cabling – The term "Horizontal Cabling" shall mean that part of the cabling system that extends from, and includes, the work area telecommunications outlet/connector to the horizontal cross-connect in the telecommunications room.
25. Horizontal Cross Connect (HC) – The term "Horizontal Cross Connect" shall mean A group of connectors (e.g., patch panel or punch-down block) that allows equipment and backbone cabling to be cross connected with patch cords or jumpers.
26. Impedance – The term "Impedence" shall mean a unit of measure expressed in ohms. The total opposition, including resistance, capacitance, and inductance, that a circuit, cable, or component offers to the flow of alternating current.
27. Index of refraction (IOR) – The term "Index of Refraction" shall mean the ratio of the velocity of light in a vacuum to the velocity of a light in another medium. Also called refractive index.
28. Inductance – The term "Inductance" shall mean the property of an electrical force field built around a conductor when current flows through it, or the resistance to change in current.

29. Infrastructure (Telecommunications Infrastructure) – The term "Infrastructure" shall mean a collection of those telecommunications components, excluding equipment, that together provide the basic support for the distribution of all information within a building or campus.
30. Innerduct – The term "Innerduct" shall mean a nonmetallic raceway, usually circular, placed within a larger pathway.
31. Interbuilding (Campus) backbone – The term "Interbuilding Backbone" shall mean a backbone network providing communications between more than one building.
32. Intermediate cross-connect (IC) – The term "Intermediate Cross Connect" shall mean the connection point between a backbone cable that extends from the main cross-connect and the backbone cable from the horizontal cross-connect.
33. Intrabuilding backbone – The term "Intrabuilding Backbone" shall mean a backbone network providing communications within a building.
34. Jack – The term "Jack" shall mean a telecommunications outlet/connector. See modular jack.
35. J-hook – The term "J-Hook" shall mean a supporting device for horizontal cables that is shaped like a J. It is attached to some building structures. Horizontal cables are laid in the opening formed by the J to provide support for the cables.
36. Jumper – The term "Jumper" shall mean an assembly of twisted pairs without connectors, used to join telecommunications circuits/links at the cross-connect, or an optical fiber cable with connectors installed on both ends.
37. Ladder rack – The term "Ladder Rack" shall mean a device similar to a cable tray but more closely resembles a single section of a ladder. It is constructed of metal with two sides affixed to horizontal cross members.
38. Latency – The term "Latency" shall mean the time it takes for a signal to pass through a device or network.
39. LC connector – The term "LC Connector" shall mean, a small form factor (SFF) single fiber, optical fiber connector used for the termination of both multimode and singlemode optical fiber cables. A two-fiber, duplex connector option is also available. The housing mechanism of the LC connector, both simplex and duplex is a push-pull type connection.
40. Light Amplification by Stimulated Emission of Radiation (LASER) – The term "Laser" shall mean a device that produces coherent, highly directional light with a narrow range of wavelengths used in a transmitter to convert information from electric to optical form.
41. Light Emitting Diode (LED) – The term "LED" shall mean a semiconductor diode that spontaneously emits incoherent light from the p-n junction when forward current is applied. It converts information from electrical to optical form. An LED typically has a large spectral width. LEDs give moderate performance at lower prices than laser diodes. LEDs are commonly used with multimode fiber in data enterprise and industrial applications.
42. Local Area Network (LAN) – The term "Local Area Network" shall mean a geographically limited data communications system for a specific user group consisting of a group of interconnected computers sharing applications, data, and peripheral devices (e.g., printers and CD-ROM drives) intended for the local transport of data, video, and voice.
43. Local Exchange Carrier (LEC) – The term "Local Exchange Carrier" shall mean the telecommunications company that provides public switched network access service.
44. Logical Topology – The term "Logical Topology" shall mean the actual method, e.g. ring, bus, star, by which different nodes in a network communicate with one another as compared to the physical connections. Contrast with physical topology.

45. Loose Tube – The term "Loose Tube" shall mean a type of optical fiber cable construction where one or more fibers are laid loosely in a tube. Also called loose tube fiber.
46. Main Cross-Connect (MC) – The term "Main Cross Connect" shal mean the cross-connect normally located in the (main) equipment room for cross-connection and interconnection of entrance cables, first-level backbone cables, and equipment cables.
47. Maintenance Hole (MH) – The term "Maintenance Hole" shall mean a vault located in the ground or earth as part of an underground duct system and used to facilitate placing, connectorization, and maintenance of cables as well as the placing of associated equipment, in which it is expected that a person will enter to perform work.
48. Mechanical splicing – The term "Mechanical Splicing" shall mean the joining of two optical fibers through mechanical means to enable a continuous signal. These spliced connections may be temporary or permanent.
49. Media – The term "Media" shall mean wire, cable, or conductors used for telecommunications.
50. Metropolitan Area Network (MAN) – The term "Metropolitan Area Network" shall mean a data communications network that covers an area larger than a campus area and smaller than a wide area network. Typically a MAN interconnects two or more LANs and usually covers an entire metropolitan area (a large city and its suburbs).
51. Micron (µm) – The term "Micron" shall mean a unit of length equal to one millionth of a meter, and shall be an abbreviation for micrometer.
52. Modular Jack – The term "Modular Jack" shall mean a female telecommunications connector that may be keyed or unkeyed and may have six or eight contact positions, but not all the positions need be equipped with jack contacts.
53. MT-RJ connector – The term "MT-RJ Connector" shall mean a small form factor (SFF) multi-fiber, optical fiber connector used for the termination of both multimode and singlemode optical fiber cables. The housing mechanism of the MT-RJ connector is a push-pull type connection.
54. Multimode fiber (MM) – The term "Multimode Fiber" shall mean an optical waveguide that allows many bound modes to propagate.
55. Multi-User Telecommunications Outlet Assembly (MUTOA) – The term "Multi-User Telecommunications Outlet Assembly" shall mean a grouping in one location of several telecommunications outlet/connectors.
56. Nanometer (nm) – The term "Nanometer" shall mean a unit of length equal to one billionth of a meter. The most common unit of measurement for optical fiber operating wavelengths.
57. Near-End Crosstalk (NEXT) loss – The term "Near-End Cross Talk loss" shall mean the unwanted signal coupling between pairs. It is measured at the end of a cable nearest the point of transmission. Contrast with far-end crosstalk.
58. Network Interface (NI) – The term "Network Interface" shall mean the point of interconnection between the public switched network and a privately owned terminal.
59. Nominal Velocity of Propagation (NVP) – The term "Nominal Velocity of Propagation" shall mean the speed of a signal through a cable relative to speed of light.
60. Nonzero Dispersion Shifted – The term "Nonzero Dispersion Shifted " shall mean a type of optical fiber designed to introduce a small amount of dispersion without a zero point crossing in the wavelength division multiplexer passband. With this type of optical fiber, it is possible to eliminate, or at least greatly reduce the degradation due to four wave mixing, a distortion mechanism that requires the spectral components to be phase matched along the optical fiber.
61. Numerical Aperture (NA) – The term "Numerical Aperture " shall mean a number that expresses the light-gathering ability of a fiber, defining the maximum angle to the fiber

axis at which light will be accepted and propagated through the fiber. NA = sin q, where q is the acceptance angle.

62. Open Office – The term "Open Office" shall mean a floor space division provided by furniture, movable partitions, or other means instead of by building walls.
63. Open Office Cabling – The term "Open Office Cabling" shall mean the cabling that distributes from the horizontal cross-connect to the open office area utilizing a consolidation point or multi-user telecommunications outlet.
64. Optical Fiber – The term "Optical Fiber" shall mean a thin filament of glass or plastic that conducts a light signal. Optical fiber consists of a central light-carrying core (glass or plastic) and an outer refractive cladding. See plastic optical fiber.
65. Optical Fiber Cable – The term "Optical Fiber Cable" shall mean an assembly consisting of one or more optical fibers.
66. Optical Fiber Cladding – The term "Optical Fiber Cladding" shall mean the outer layer of glass surrounding the light-carrying core of the optical fiber. It has a lower refractive index than the core, which serves to confine the light to the core.
67. Optical Fiber Core – The term "Optical Fiber Core" shall mean the central part of an optical fiber that is used to carry the light pulses; made of glass or plastic.
68. Patch Cord – The term "Patch Cord" shall mean a length of cable with a plug on one or both ends.
69. Pathway – The term "Pathway" shall mean the vertical and horizontal route of the telecommunications cable.
70. Pedestal – The term "Pedestal" shall mean a protective above-ground enclosure used most commonly to house a splice point or administrative terminal location.
71. Permanent link – The term "Permanent Link shall mean a test configuration which utilizes the transmission path between two mated interfaces of generic cabling, excluding equipment cords, work area cords, and cross-connections but including the connecting hardware at each end. Contrast with basic link test configuration.
72. Physical Topology – The term "Physical Topology" shall mean the material layout of a network that is defined by its cabling architecture.
73. Pigtail – The term "Pigtail" shall mean one or more conductors or fibers with only one end terminated.
74. Pin diode – The term "Pin Diode" shall mean a positive-intrinsic-negative diode, used to convert optical signals to electrical signals in a receiver.
75. Plastic Optical Fiber (POF) The term "Plastic Optical Fiber" shall mean the Optical fiber made of plastic rather than glass. See optical fiber.
76. Plenum – The term "Plenum" shall mean a compartment or chamber to which one or more air ducts are connected and that forms part of the air distribution system.
77. Power Sum Attenuation-to-Crosstalk Ratio (PSACR) – The term "Power Sum Attenuation-to-Crosstalk Ratio " shall mean a ratio in dB, determined by subtracting the insertion loss from the power sum near-end crosstalk loss.
78. Power Sum Equal Level Far-End Crosstalk (PSELFEXT) – The term "Power Sum Equal Level Far-End Crosstalk " shall mean a computation of the unwanted signal coupling from multiple transmitters at the near-end into a pair measured at the farend, and normalized to the received signal level.
79. Power Sum Near- End Crosstalk (PSNEXT) loss – The term "Power Sum Near- End Crosstalk" shall mean a computation of the unwanted signal coupling from multiple transmitters at the near-end into a pair measured at the near-end.
80. Propagation Delay – The term "Propagation Delay" shall mean the time required for a signal to travel from one end of the transmission path to the other end.

81. Receiver, Optical – The term "Optical Receiver" shall refer to an optoelectronic circuit that converts an optical signal to an electrical serial logic signal. It contains a photo-detector, amplifier, discriminator, and pulse-shaping electronics.
82. Return Loss – The term "Return Loss" shall mean a ratio, expressed in dB, of the power of the outgoing signal to the power of the reflected signal.

83. SC connector – The term "SC Connector" shall mean the single fiber coupling optical fiber connector, also known as the SC connector and 568SC duplex connector, is used for the termination of both multimode and single mode optical fiber cables. The housing mechanism of the SC connector is a push-pull type connection.
84. Single mode Optical Fiber (SM) – The term "Single mode Optical Fiber" shall mean optical fiber with a relatively small diameter, featuring a core of 8–9 micron (micrometers) and a cladding diameter of 125 micron; light is restricted to a single path, or mode, in single mode fiber, an optical fiber that carries only one path of light.
85. Structured Cabling Contractor (SCC) – The term Structured Cabling Contractor shall mean the Contractor responsible for the installation of the Structured Cabling System.
86. Structured Cabling System (SCS) – The term "Structured Cabling System" shall mean the copper and fiber optic cabling infrastructure utilized to provide voice, data and digitized video services from the point of service entry to the user work area outlet.
87. Telecommunications Room (TR) – The term "Telecommunications Room" shall mean an enclosed architectural space for the purposes of housing telecommunications equipment, cable terminations and cross connect cabling.
88. Tight Buffer – The term "Tight Buffer" shall mean a cable construction where each fiber is tightly buffered by a protective thermoplastic coating to a diameter of 900 microns.
89. Tight-Buffered Optical Fiber Cable – The term "Tight-Buffered Optical Fiber Cable" shall mean a type of cable construction whereby each glass fiber is tightly buffered by a protective thermoplastic coating to a diameter of 900 microns. Increased buffering provides ease of handling and connectorization.
90. Wavelength The length of a wave measured from any point on one wave to the corresponding point on the next wave (e.g., from crest to crest). The wavelength of light is usually measured in nanometers.
91. Wide Area Network (WAN) – The term "Wide Area Network" shall mean an internetwork that uses telecommunications links to connect geographically distant networks.
92. Work Area (work station) – The term "Work Area" shall mean a building space where the occupants interact with telecommunications terminal equipment.
93. Work Area Cable (cord) – The term "Work Area Cable" shall mean a cable connecting the telecommunications outlet/connector to the terminal equipment.
94. Work Area Outlet – The term "Work Area Outlet" shall mean a connecting device for termination of horizontal media. See telecommunications outlet/connector.

1.04 SYSTEM DESCRIPTION

A. The Structured Cabling System shall utilize a network of fiber optic, unshielded and/or shielded twisted pair, riser, tie and station cables to support systems including, but not limited to, data and voice. Additional cable types may be required to meet various system requirements and shall be specified elsewhere. Changes in the quantity and/or types of cables required shall be documented and submitted to the Engineer for approval prior to installation. Cables and terminations shall be provided and located as shown, and in the quantities indicated on the Drawings. Fiber optic cables shall terminate on modular patch panels and/or in fiber termination enclosures designed specifically for this purpose, and located in all demarcation and termination points shown on the Drawings. All cables, and terminations shall be identified at all accessible locations, and at both ends. All cables shall terminate in an alpha-numeric sequence at all termination locations as indicated in these Specifications. All copper cable terminations shall comply with and be tested to the latest revisions of TIA/EIA 568 standards for Category 3, Category 5e and/or the latest revisions of the proposed Category 6 installations. Available and unused pairs between the Equipment Room (ER) and Horizontal Cross Connect(s) (HC) shall terminate and shall be identified as spare at each location and shall carry a unique sequentially numeric identifier at both ends. Station cables shall terminate on one, two or three gang wall plates equipped as shown on the Drawings.

B. The Structured Cabling System shall consist of the following components:

1. Work Area

a. The Work Area consists of the Telecommunications Outlet (TO) terminated on the end of the horizontal cable and provides modular connectivity to a single point device. The SCC shall provide the required connectivity in close proximity to the device.
b. Unless otherwise indicated on the Drawings, it shall be the responsibility of the SCC to properly terminate cabling to their respective devices. All cabling shall be 100% tested by the SCC to assure specified performance.

2. Horizontal Cabling

a. The Horizontal Cabling connects the Work Area to the HC. Any exceptions to the design of this cabling as detailed on the Drawings must be stated in writing and proven incompatible, or in violation of local codes or standards. It is imperative that the Structured Cabling System be installed as designed to create a fully operational system without any restrictions, and to provide maximum flexibility for future use.

3. Inter- and Intra- Building Backbone

a. The copper and/or fiber backbone cabling shall provide connectivity, via the Cross Connect Hardware and any related systems electronics, from the MC through any potential IC, to the Horizontal Cabling terminated at the HC.
b. Should other systems contractors require access or availability to the Inter- or Intra-building backbone, the SCC shall notify the Engineer immediately so as to coordinate backbone installation and materials requirements. The SCC shall furnish and install all additional backbone fiber and/or copper resulting from these additional requirements.

4. Pathways

   a. All continuous pathways, i.e. conduit, cable tray, raceway, etc., required to support the cabling shall be provided by the Electrical Contractor under Division 16 unless indicated otherwise in the Contract Documents.
   b. All non-continuous, or non-rigid pathways, i.e. J-hooks, inner-duct, etc., required to support the cabling shall be provided by the SCC under the Structured Cabling System, unless indicated otherwise in the Contract Documents.
   c. All cable tray and related pathway hardware built into Telecommunications Spaces shall be provided by the SCC.

5. Telecommunications Spaces

   a. Dedicated and, where specifically indicated on the Drawings, non-dedicated spaces shall be constructed with appropriate power and environmental controls. These spaces shall house the cross connect hardware, any required pathway hardware and the users supporting electronics. The space shall have finishes and wall treatments to optimize the use and maintenance of the equipment and hardware contain within.

6. Cross Connect Hardware

   a. The Cross Connect Hardware links all of the subsystems together at the HC, IC, and/or the MC locations. The Cross Connect Hardware consists of termination blocks, patch panels, racks, labeling hardware, cross connect wire, and patch and equipment cables for providing circuit connections and identification. All components required for the cross connects and identification of this equipment shall be provided by the SCC, and shall be electrically and performance compatible with the horizontal and backbone cabling to assure signal quality.

7. Administrative Documentation and Record Keeping

   a. All cable path and cross connect field engineering changes and records required shall be provided by the SCC, with cooperation from the Electrical Contractor and the other systems contractors, and shall be subject to approval by the Engineer. In addition, all labeling for the cables, cross connect blocks, patch panels, outlets, etc. shall be provided and installed by the SCC. The other systems contractors shall be responsible for placing labels on the cables and equipment they provide.

## 1.05 SUBMITTALS

A. Structured Cabling Contractors Qualifications

1. At the time of bid form submission, the SCC shall submit the following information:

   a. The SCC's manufacturer certifications for:

      1) twisted pair cabling
      2) fiber optic cabling
      3) connectivity

b. The RCDD's BICSI certification. Refer to SCC's Qualifications below.
c. A listing of the like projects within the last three (3) years. Refer to SCC's Qualifications below.

2. During the bid review, the SCC may be asked to provide any/or all of the following:

a. A listing of the probable team members
b. BICSI and manufacturer certifications for the installation of the Structured Cable Plant.
c. Certifications for the installation for any firestopping required under the scope of the Structured Cable Plant installation.

3. Any/all items listed in paragraph 1.05 subparagraph A.1 or A.2, can and will be checked for authenticity and accuracy. The Owner reserves the right to reject any unauthorized or inaccurate submissions.

4. Should the SCC either fail or refuse to provide any of the items listed and/or requested in paragraph 1.5 subparagraph A.1 or A.2, the Owner reserves the right to determine the SCC as being not fully responsive and as such discard the bid in its entirety.

B. For additional requirements, refer to Section 27 05 00 – TECHNOLOGY COMMON WORK RESULTS

C. Product Data Sheets

1. Product Data Sheets required under this Section's scope of work shall include:

a. Copper Patch Panels
b. Termination Blocks
c. Faceplates
d. Jacks
e. Twisted Pair Cable
f. Wire Management
g. Enclosures

D. Shop Drawings

1. The SCC shall submit the following shop drawings:

a. A detailed riser diagram demonstrating the SCC's understanding of the backbone cabling.
b. Drawings of any floor boxes with details of the various internal faceplates and their respective contents.
c. Drawings of any through floor fittings with details of their contents.
d. Layout drawings for cable tray and cable runway (1/16" scale minimum) based on trade coordination efforts indicating anticipated routings based on the coordination among the various trades.

## 1.06 QUALITY ASSURANCE

### A. Qualifications

1. The SCC shall be fully qualified to perform installations as described on the Contract Drawings and within these Specifications.
2. The SCC shall have completed a minimum of three projects of like scope and complexity within the last three (3) years.
3. The SCC shall have been active in bidding, being awarded, and performing work consistent with that which is indicated on the Contract Documents for a period not less than five (5) years.
4. The SCC shall maintain an installation staff whose sole function is the installation of Structured Cabling and associated equipment and shall not utilize additional personnel obtained by means of a temporary placement or staffing agency.
5. The SCC shall not utilize apprentice or trainee personnel for the pulling or termination of Structured Cabling. Furthermore, apprentices or trainees may only assist in the pulling of Structured Cabling. The primary laborer for the pulling and/or terminating of Structured Cabling must be a certified installer.
6. The SCC's installation staff shall consist of 85% certified installation personnel. The remaining shall be either apprentice installation personnel or laborers under full time employment by the SCC. Of the certified staff, 40% shall be BICSI Technician Level Installers. The remainder shall be BICSI Level I or Level II Installers. The Engineer reserves the right to wave these requirements.
7. The SCC shall have a dedicated Project Manager, who shall be the sole point of contact for the Engineer or Owner. Said Project Manager shall be assigned to the project at the time of the issuance of the Letter of Intent by the Owner, and shall remain assigned to the project through the completion of the final punch list.

### B. Certifications

1. The SCC shall possess current certifications by BICSI for the installation and maintenance of all Structured Cabling and associated equipment being provided under the Structured Cabling Contract.
2. All installation personnel assigned to the task of pulling or terminating cabling shall possess a current certification by BICSI and/or the manufacturer of the cabling products being installed
3. The SCC shall possess current certification for the installation of all required fire stopping to be installed under the scope of the Structured Cable Plant.
4. The SCC's Project manager shall possess a current RCDD with no outstanding or unresolved judgment or assessments by BICSI against the PM's certification.

### C. Samples

1. The Engineer reserves the right to request, and have submitted, additional samples, or samples not explicitly requested within these Documents.
2. Samples required under this section include, but are not limited to:

    a. None

D. Mock Ups

1. The SCS shall assemble one rack prior to assembling any subsequent racks. This rack assembly shall be reviewed by the Engineer prior to assembling any subsequent racks, or anchoring any racks. The SCC shall provide a minimum of 48 hours notice to the Engineer as to the availability of the assembled rack.

E. Meetings

1. The SCC shall be responsible for all Pre-Construction, Pre-Installation or Progress Meetings that may be called by the Engineer, Owner or Owner's authorized representative. Failure to responsive to these meeting requirements may be construed by the Owner as an inability of the SCC to fulfill the Contract, and as such may be utilized to cancel the contract with the SCC.

F. REGULATORY REQUIREMENTS

1. All communications cabling used throughout this project shall comply with the requirements as outlined in the National Electrical Code (NEC) Articles 725, 760, 770, and 800 and the appropriate local codes. All copper cabling shall bear CMP (plenum rated), CM/CMR (riser rated) and/or appropriate markings for the environment in which they are installed. All fiber optic cabling shall bear OFNP (plenum rated), OFNR (riser rated) and/or appropriate markings for the environment in which they are installed.
2. The Contractor shall be responsible for the determination of the necessity of plenum/non-plenum rated cabling, and shall be aware of any local codes regarding the use of these cable types.
3. Cables shall not be attached to ceiling grid supports or laid directly on the ceiling grid.
4. Cables shall not be attached to or supported by fire sprinkler heads or delivery systems or any environmental sensor located in the ceiling space.

1.07 DELIVERY STORAGE AND HANDLING

1. The SCC shall responsible for the storage and handling of all Materials required by the Structured Cabling portion of this Contract. The SCC shall handle and store these Materials so that they are available when required on the job site, and are in a condition that is like new and ready for installation.

B. Storage and Protection

1. Any Materials that show signs of mishandling or have been stored in a fashion so as to reduce the value of the Materials shall be replaced with new Materials at no additional cost to the Owner.

C. Waste Management and Disposal

1. All excess Materials shall be discarded in an appropriate manner at the SCC's expense.
2. Any/all hazardous materials shall be handled appropriately and shall be disposed of in a manner consistent with same, and compliant with all applicable codes and regulations.

1.08 PROJECT/SITE CONDITIONS

A. The SCC shall become and remain familiar with all project/site conditions that may have impact on the timing, quality and/or quantity of Materials for the project. The SCC shall coordinate their efforts with changes in the Project/Site conditions so as to optimize the installation for the Owner.

B. Any additional efforts by the SCC due to a lack of awareness of project/site conditions shall not garner any additional compensation from the Owner, Engineer or Owner's authorized representative.

1.09 SEQUENCING

A. The SCC shall become and remain aware of the overall sequencing of the project. The SCC shall utilize this information to coordinate the efforts of the SCC's personnel on site so as to minimize the impact on the other trades and any current and future progress and/or completion of the project.

1.10 SCHEDULING

A. The SCC shall create a project schedule, coordinated with the Owner and/or Owner's authorized representative's for the overall project schedule. This schedule shall be adjusted as necessary by the progress of the job both by the SCC and the overall project schedule. The SCC shall forward copies of this schedule to the Engineer, both upon its initial completion and at any point of modification during the course of the project.

B. The SCC PM shall apprise the Engineer on a weekly basis of the progress of the project in relation to the SCC's schedule and the overall project schedule.

1.11 WARRANTY

A. The SCC shall provide, at the time of Owner Acceptance, a twenty (20) year applications warranty and a twenty (20) year material warranty. Said warranty shall be furnished by the manufacturer of the Structured Cabling System's connectivity manufacturer. Said warranty shall be carried by the manufacturer, and wherever required, it shall be the manufacturer that shall determine by whom any warranty service shall be rendered. The manufacturer shall select the best qualified firm for any warranty service. Best qualified shall be determined by current status of all necessary certifications, including, but not limited to cabling and connectivity, and fire stopping, by proximity and availability to the job site, and by depth of knowledge of the installation.

1.12 SYSTEM STARTUP

A. System Startup for the SCS shall include, but not be limited to, 100% termination and testing of the SCS by qualified and certified personnel.

1.13 OPERATIONS AND MAINTENANCE MANUALS

A. The SCS shall include the riser diagram for all backbone cabling and testing data from this system within a unique section of the Operation and Maintenance Manual.

B. The Operations and Maintenance Manual section for this Section shall include a copy of all test results burned onto a CD along with any required viewing software to view same. Should any licensing be required for the viewing software, fees for said licensing shall be the responsibility of the SCS. The license information shall be distributed with the Operations and Maintenance Manuals, and to extent necessary shall have any unique ID's or keys assigned by copy.

1.14 MAINTENANCE

A. The spare parts required by the SCS shall include, but not be limited to,:

1. None

PART 2 - PRODUCTS

2.01 GENERAL

A. Equivalent Products

1. Only products listed as approved shall be utilized. Substitutions, under normal circumstances, shall not be allowed. However, in unusual cases, substitutions may be unavoidable. ALL requests for product substitutions shall be approved by the Engineer prior to the bid submission. Loss of certification by the Contractor, or unavailability of product to the Contractor that is not of a market wide nature, shall not be construed as an unavoidable circumstance. The request for product substitution and supporting documentation must be submitted, in writing, along with any samples requested by the Engineer. Written approval for product substitution must be submitted with the bid.

2.02 COMPONENTS

A. Connectors

1. Copper RJ-45

a. All Category 5e jack shall exceed the Category 5e transmission requirements for connecting hardware, as specified in the most recent revisions of ANSI/TIA/EIA 568, and related addenda, regarding the Commercial Building Telecommunications Cabling Standard, Horizontal Cable Section, and have readily available numeric test results from ETL for passive model testing and TULLY for active model testing.
b. The Category 5e jack shall be capable of being installed on a modular faceplate, patch panel, or as a modular Telecommunication Outlet (TO), supporting all current and future applications designed to run on Category 5e jacks.
c. The Category 5e jack shall be readily terminated in either the T568A or T568B configuration.
d. The Category 5e jack shall be capable of being installed at either a 45° or a 90° angle.
e. The Category 5e jack shall be capable of greater than 750 insertions.
f. The Category 5e jack shall be capable of greater than 200 terminations of either 22 or 24 AWG wire.

g. Approved manufacturers and part numbers:

1) Panduit
2) Ortronics
3) Leviton
4) CommScope

2. Plugs

a. Category 5e modular plug used for terminating devise end of camera and wireless access point. When assembled onto Category 5e compliant patch cable it will pass all TIA/EIA requirements for NEXT and Return Loss.
b. Must meet cable or connectors manufactures warrantee guidelines for category 5e connectivity.

3. Fiber

a. All fiber connectors shall be fusion spliced pigtails.
b. All fiber connectors shall glass in ceramic ferrule.
c. All fiber connectors shall utilize SC connector configurations.
d. All fiber connectors shall create an insertion loss of 0.2 dB average, 0.75 maximum.
e. All fiber connectors shall be TIA/EIA 604-3 compliant.
f. Approved manufacturers and part numbers:

1) Panduit
2) Berk Tek
3) Leviton
4) CommScope

NOTE: Single mode fiber shall utilize fusion splicing of factory connectorized assemblies.

B. Faceplates

1. All Faceplates shall be available in single, duplex, triplex, quadplex, or sixplex arrangements in a single gang configuration.
2. Faceplates shall be available in eight-plex arrangements in a two gang configuration.
3. Surface mount boxes shall be available in single, dual, quad, six-plex and twelve-plex configuration.
4. All faceplates shall be as manufactured by the manufacturer of the associated connectors, unless otherwise noted in the Drawings.
5. Faceplates shall wherever possible match the color of the associated electrical faceplates. Coordinate the faceplate color with the electrical contractor and drawings prior to installation.
6. Acceptable Manufacturers and Series

a. Panduit
b. Ortronics
c. Leviton
d. CommScope

C. Patch Panels

1. Copper

a. The termination block shall support the appropriate Category 5e applications, both current and future, designed for the associated connectivity solution.
b. All patch panels shall be wired to EIA/TIA 568B.
c. The wiring block shall be able to accommodate both 22 and 24 AWG cable conductors.
d. The block shall be Underwriter's Laboratories (UL) listed, and ETL certified.
e. All patch panels shall be UL listed for Category 5e.
f. A 110 IDC block shall provide for the termination of horizontal, equipment, or tie cables.
g. The signal transmission from the 110 punch down terminals to the RJ45 jack shall be by means of a printed circuit board.
h. All 24 port patch panels shall utilize 1U of rack space.
i. All 48 port patch panels shall utilize 2U of rack space.
j. Approved manufacturers and part numbers

1) Panduit
2) Ortronics
3) Leviton
4) CommScope

2. Fiber

a. The cabinets shall be capable of being mounted in a standard 19" rack utilizing one, two three or four units of standard height (1.75 inch EIA hole spacing).
b. The cabinets shall utilize a modular connector plate to allow for versatile connector configuration, with panels for SC, ST, and LC connectors.
c. The unit shall be capable of flush or partially flush mounting with a front protector that shall be capable of readily mounting any required labeling.
d. The unit shall be compliant with both ANSI/TIA/EIA-568A and ANSI/TIA/EIA-606.
e. The unit shall utilize a slide out drawer assembly.
f. The unit shall be capable of accepting a field installable lock mechanism.
g. Acceptable Manufacturer and Model

1) Panduit
2) Leviton
3) Ortronics
4) CommSope

D. Cabling

1. Copper

a. Category 5e Unshielded Twisted Pair (UTP), 4 Pair

1) Category 5e UTP, 4 Pair Horizontal Distribution Cables shall extend between the station location and the associated HC, shall consist of 4 pair, 24 gauge, UTP, and shall terminate all conductors onto an 8 pin modular jack provided at each outlet. Cable jacket shall comply with Article 800 of the NEC for use as a plenum or non-plenum cable as required by these Specifications and by the local authority having jurisdiction. The 4 pair UTP cable shall be UL Listed Type CMP (plenum) or CM (non-plenum).
2) The Category 5e UTP cable shall be a round cable design with fluting to maintain the appropriate pair spacing relationship. The cable shall support all current future applications designed to run on Category 5e cabling.
3) The Category 5e UTP cable shall be designed to have improved balance of 10dB as compared to current Category 5e cable, which shall result in higher immunity to EMI.
4) The Category 5e cable shall be specified to a minimum of 200 MHz.
5) Reel weight shall be an additional 2.25 lbs.
6) Approved manufacturers and part numbers

a) Panduit TX5500™
b) Mohawk MegaLAN® Category 5E
c) Berk-Tek LANmark-350

b. High Pair Count Twisted Pair Cables

1) Non-shielded 24 AWG multi-pair copper cables shall be used as the intra-building backbone cables. The cable shall support voice, data and building service applications. The bending radius and pulling strength requirements of all backbone cables shall be observed during handling and installation. The multi-pair copper cables shall be in non-plenum form and placed in conduit as required.
2) Non-shielded cable shall consist of 24 AWG solid copper conductors insulated with color coded PVC. 25, 100, 200 and 300 pair cables shall be ETL certified to current revisions of EIA/TIA 568 for Category 3.
3) Cabling shall be UL Listed for Fire Safety.
4) Manufacturer shall be ISO 9001 Certified.
5) Approved manufacturers

a) Mohawk
b) Berk-Tek
c) General
d) CommScope

2. Fiber

a. Indoor Multimode Fiber – Laser Optimized

1) The cable shall be listed by the NEC for OFNP compliance and CSA for FT-6 compliance.
2) The cable shall be compliant with NFPA 262 for plenum, riser and general building applications.
3) The cable shall be an all dielectric construction requiring no electrical connection to ground.
4) The fiber type shall be a 50/125 micron fiber with:

a) a maximum attenuation of 3.0dB/km @ 850 nm and 1.5 dB/km @ 1300 nm,
b) a minimum LED bandwidth of 1500 MHz*km @ 850 nm and 500 MHz*km @ 1300 nm, and
c) a minimum effective modal bandwidth of 2000 MHz*km @ 850 nm MHz*km.

5) The fiber shall have a serial gigabit Ethernet distance of 1000 meters @ 850 nm and 600 meters @ 1300 nm.
6) Acceptable Manufacturer and Model

a) Corning MIC plenum cable
b) Equal by Mohawk, or Berk-Tek (specified as Corning Glass)

E. Wire Management

1. Horizontal

a. Units shall fit in a standard 19” rack.
b. Units shall be 1U or 2U construction.
c. Units shall be two sided to provide functionality on both the front and back of the rack.
d. Units shall have front and back covers that have a dual hinge technology
e. Access into and out of the top and bottom of the Management shall be finger type construction.
f. Acceptable Manufacturers and Models shall be:

1) Panduit
2) Or equal by Leviton, Ortronics and CommScope

2. Vertical

a. Units shall be 8’ construction.
b. Units shall be two sided to provide functionality on both the front and back of the rack.
c. Units shall have front and back hinged covers that have a dual hinge technology
d. Access into and out of the top and bottom of the Management shall be finger type construction.

e. Acceptable Manufacturers and Models shall be:

1) Panduit Patch Runner
2) Or equal by Hoffman, Quest or Middle Atlantic

2.03 ACCESSORIES

A. Patch Cords

1. Patch Cords shall be manufactured and supplied by the manufacturer of the connectivity provide, and shall be rated for the same performance specifications as the cabling and connectivity being utilized.
2. Unless otherwise indicated on the Drawings the SCC shall supply patch cords based on 100% of the horizontal cabling terminated at the work area, and any wall-phone locations. The SCC shall provide two cables for each work area outlet, and one cable for each wall phone. Of the cables provided, the SCC shall supply 25% of the cables as 1m, 50% as 3m, and 25% as 5m. Refer to the Technology Drawings for any specific quantities and lengths that may override these criteria.

B. Corrugated Innerduct (Innerduct)

1. The corrugated innerduct shall be a minimum of 1.0” inner diameter and be constructed of polyethylene plastic. The innerduct shall be orange and shall have pre-installed pull tape or pull rope.
2. The flame ratings shall meet or exceed UL-910 for plenum, UL-1666 for riser, and UL 1581 for General Purpose as outlined in the current NEC, Article 770.

PART 3 - EXECUTION

3.01 PERSONNEL

A. Project Manager

1. The Project Manager shall provide regular project updates to the Engineer as to percentage of job completed broken down by category of work, for example, horizontal cabling, backbone copper, backbone fiber, system A, system B, etc.
2. The Project Manager shall remain in constant involvement and be aware of the status of any unforeseen circumstances, and/or changes to the project design necessitated by field conditions.

3.02 EXAMINATION

A. The SCC shall examine the entire site before beginning the project and on a regular basis, and assess the acceptability of the site for the installation of the SCS as represented on these Documents. Should the SCC find any concerns with the conditions of the site, the SCC shall contact the Engineer immediately, before beginning any installation, terminations or testing. The Engineer shall determine the resolution of the situation prior to the SCC commencing work. Should the Engineer be unavailable, the SCC may choose to have the PM/RCDD make a decision on how to proceed based on the intent of the design as indicated on the Documents, and the PM’s knowledge of the applicable codes and standards. However, the Engineer retains the right to reject the solution, and require the SCC to rework the solution to a conclusion that is acceptable by the Engineer.

3.03 INSTALLATION

A. Cable Routing

1. The SCS shall provide a 36" service loop at the end of each work area stub, and a 10' service loop at the TR servicing that drop. The service loop at the TR shall be stored in the cable runway of the TR in a fashion so as to prevent the crushing of the service loop by other cable stacked on the service loop. Should no cable runway or cable tray be available for such service loops the SCC shall either construct a loop storage system of J-Hooks or add an additional section(s) of cable runway to accommodate the service loops.
2. Where the SCC is required to install non-continuous pathways for the SCS, the SCC shall keep hallway crossover to a minimum. Furthermore, non-continuous pathways shall be routed so as to follow logical paths parallel and perpendicular to the building structure. Diagonal pathways are unacceptable, unless absolutely unavoidable.
3. In suspended ceiling and raised floor areas where duct, cable trays or conduit are not available, the Contractor shall bundle, in bundles of 50 or less, horizontal distribution wiring with cable ties snug, but not deforming the cable geometry. Where cable bundles are to be supported by J-hooks, the J-hooks shall be attached to the building structure and framework per local codes and regulations at a maximum of five (5) foot intervals.
4. Plenum rated cable ties shall be used in all appropriate areas. The Contractor shall adhere to the manufacturer's requirements and as indicated in the BICSI Telecommunications Distribution Methods Manual (TDMM) for bending radius and pulling tension of all data and voice cables. Where the manufacturer's specifications differ from those cited in the TDMM, the Contractor shall abide by the greater bending radius and the lesser pulling tension.
5. All horizontal cables, regardless of media type, shall not exceed 90 m (295 ft) from the Telecommunications Outlets in the Work Area to the Horizontal Cross Connect.
6. The combined length of jumpers, or patch cords and equipment cables in the telecommunications room/closet and the Work Area shall not exceed 10m (33 ft) unless used in conjunction with a multi-user Telecommunications Outlet.
7. A minimum of two horizontal cables shall be routed to each Work Area, unless otherwise noted on the Drawings. The exact compliment of cabling and terminations in any given Work Area is detailed on the Drawings.
8. Horizontal pathways shall be installed such that the minimum bending radius of horizontal cables is kept within manufacturer specifications both during and after installation.
9. Telecommunications pathways, spaces and metallic raceways, which run parallel with electric power or lighting cables or conduits, which is less than or equal to 480 Vrms, shall be installed with a minimum clearance of 50 mm (2 inches).
10. The installation of telecommunications cabling shall maintain a minimum clearance of 3 m (10 ft) from power cables or conduits in excess of 480 Vrms.
11. No telecommunications cross connects shall be physically located within 6 m (20 ft) of electrical distribution panels, or step down transformers, which carry voltages in excess of 480 Vrms.
12. Each run of UTP/ScTP cable between the horizontal portion of the cross connect in the telecommunication closet and the information outlet shall not contain splices.
13. The Contractor shall provide all devices for routing the cabling as indicated on the Drawings, and as required by the manufacturer of the Structured Cabling System, so as to maintain the long term health and operability of the Structured Cabling System.
14. In a false ceiling environment, a minimum of 75 mm (3 inches) shall be observed between the cable supports and the false ceiling.

15. Continuous conduit runs installed by the Electrical Contractor shall not exceed 30.5 m (100 ft) or contain more than two (2) 90 degree bends without utilizing appropriately sized pull boxes, unless otherwise indicated in these Specifications or on the Drawings. The Technology Contractor shall verify the proper installation technique and sizing of the raceway system with the Electrical Contractor prior to installation of the cabling.
16. All horizontal pathways shall be designed, installed and grounded to meet applicable local and national codes.
17. The number of horizontal cables placed in a cable support or pathway shall be limited to a number of cables that will not affect the geometric shape of the cables.
18. Maximum conduit pathway capacity shall not exceed a 40% fill with the exception of perimeter and furniture fill, which is limited to 60% fill for moves, adds and changes, unless otherwise noted on Drawings.
19. Horizontal distribution cables shall not be exposed in the Work Area or other locations with public access.
20. Cables routed in a suspended ceiling shall not be draped across the ceiling tiles. Cable supports shall be mounted a minimum of 75 mm (3 inches) above the ceiling grid supporting the tiles.
21. Each cable shall be run in a homerun configuration, and shall contain no bridges, taps or splices, except where required specifically by the manufacturer of a technology system, utilizing a dedicated cable run.
22. Cabling shall not be attached to any mechanical, electrical or technology system other than those specifically noted in the Contract Documents.
23. Cabling shall maintain clearance from Line Voltage cabling and devices at all times, and shall be spaced from these devices so as to comply with the TDMM, the NEC, and any other local codes or regulations.
24. Cable ties and other methods of binding cabling shall not be installed in such a fashion to as to bend, crimp or deform the cabling in any way that would alter the electrical or transmission characteristics of the cabling.
25. Pulling Tension

    a. The maximum cable pulling tensions shall not exceed the manufacturer's specifications, or the limits as published in current edition of the TDMM.

26. Bending Radius

    a. The maximum cable bending radius shall not exceed manufacturer's specifications.
    b. In spaces with UTP/ScTP cable terminations, the maximum bending radius for 4 pair cable shall not exceed four times the outside diameter of the cable and ten times the outside diameter of a multi-pair cable, unless this violates the manufacturer's specifications.
    c. During the actual installation, the bending radius of 4 pair cable shall not exceed eight times the outside diameter of the cable and ten times the outside diameter of a multi-pair cable, unless this violates the manufacturer's specifications.

27. Slack

    a. In the Work Area, a minimum of 300 mm (12 inches) shall be left for UTP/ScTP, while 1 m (3 ft) shall be left for fiber cables.
    b. In telecommunications room/closets a minimum of 3 m (10 ft) of slack shall be left for all cable types. This slack shall be neatly managed on trays or other support types.

B. Innerducts

1. The SCC shall utilize individual innerducts for each fiber optic cable run.

C. Interface with Other Work

1. Where the SCS must interface with equipment installed by other trades, such as elevator machinery, the SCC shall coordinate the exact nature of the connection, and route to the connection. The SCC shall direct the Electrical Contractor for any special needs required for the rough in requirements. The SCC shall provide any special accessories that may be required for the routing terminating and testing of the cable(s).

D. Site Tolerances

1. All cabling that routes through buried conduit, or is direct buried, shall be rated for outdoor or direct burial use only.

3.04 LABELING

1. General Labeling Requirements

a. The SCC shall label, all cables, faceplates, cabling enclosures, patch panels, termination blocks, racks, equipment enclosures and related hardware.
b. All work shall be in compliance to TIA/EIA 606.
c. All labels shall be permanently attached, and shall be constructed of materials so as to assure the lifespan of the identification marker to be equal or greater than that of the device being identified.
d. The identification tag or placard shall be self adhering or attached by means of a permanent adhesive listed for the application, or other permanent mechanical means.
e. All means of identification shall be visible and clearly identifiable by personnel in charge of maintaining the cabling infrastructure.
f. All tape based products shall be manufactured for the purpose of identifying flexible communications cabling, and shall be used only on flexible materials.
g. All labels shall be machine generated onto adhesive labels or tags, or engraved on plastic laminated placards or brass tags. Use of P.Touch tape or other domestic/light duty type of label is unacceptable.
h. All laminated placards shall have a black field with white letters, unless otherwise noted.
i. The SCC shall compile all documentation required under this Section, both hard copy and electronic, and include the information in the Operating and Maintenance Manuals.
j. As previously indicated, all electronic documentation shall be recorded onto a readable CD. All files contained on the CD shall be in the native format of the software in which it was generated, as well as a plain text format.

2. Faceplate Labeling

a. All faceplates shall be labeled with the Horizontal Cross Connect and Faceplate Number.

b. The faceplate number shall be derived based on the room in which the faceplate is located, and a sequential number, e.g. TR01-138-01, where TR01 is the Telecommunications Room, 138 is the room number of the location of the faceplate and 01 indicates that this is the first faceplate in the room.
c. The label shall be permanently affixed to the faceplate in a location specifically engineered by the manufacturer to contain such information, or shall be neatly engraved directly on the faceplate and painted to facilitate easy recognition of the information.
d. The individual jack positions shall be identified with sequential letters, either by means of a pre-manufactured engraving or molding, or by installation of a machine generated label installed in a location specifically designed to hold such a label.

3. Patch Panel Labeling

a. All patch panels shall be labeled as to the identity of the patch panel.
b. The patch panel identification shall be derived based on the rack in which it is mounted and a sequential letter, e.g. TR01A-PP03, where TR01A is the rack ID, and PP03 indicates that this is the third patch panel in the rack.
c. The label shall be installed in the space provided by the manufacturer for this purpose. If no space is provisioned, the Contractor shall provide a laminated placard that shall be engraved with the identification of the patch panel, and shall be mounted in the upper right corner of the patch panel, but shall not block the proper installation of the patch panel.
d. All ports shall be labeled with the ID of the faceplate terminated at that port, and the associated jack letter from the faceplate.

4. Enclosure Labeling

a. All Enclosures shall be labeled as to the identity of the device indicated on the Drawings. The label shall be made of plastic laminate and attached at the center of the front top rail of the rack and shall be visible from eye level.

5. UTP Cable Labeling

a. All UTP cables shall be marked at both ends of the cable jacket, at approximately 2” from the end of the sheath, with a self adhesive label.
b. The label shall have the exact location of the point of service, i.e. the TR, rack or block ID and port as well as the exact work area identification, i.e. faceplate ID and port letter, at both the work area and cross connect locations.

B. System And Service Shutdown

1. Any systems or service shutdowns that must occur after such time that services have begun to be distributed on the SCS, shall be coordinated with the Owner, and the affected trades, prior to shutdown.

3.05 REPAIR AND RESTORATION

A. Any removal or rework of any structure or finish shall be restored to the original condition that the affected area was in prior to the removal or rework. All repairs and/or restoration shall be executed in a professional and workman like fashion by a tradesman skilled in such work. The Owner or Owner's authorized representative shall give written approval of all repairs and/or restoration upon its completion.

3.06 REINSTALLATION

A. All device and equipment that is wither removed and returned to its original location or removed and relocated shall be tested as if new. Should any device or equipment prove to be unable to pass such test, the SCC shall contact the Engineer for a resolution. Such resolution shall be given in writing before proceeding with the execution of the resolution.

3.07 FIELD QUALITY CONTROL

A. Site Test, Inspection

1. The Engineer retains the right to be present at any or all cable certification. The Contractor shall provide written notice 48 hours prior to the beginning of the certification process.
2. The Contractor shall provide a copy of the unaltered certification test reports to the Engineer in both hardcopy and electronic format. The Contractor shall also provide a copy of the associated Cable Tester's Database Management Software with unedited soft copy.
3. Independent System Certified testing may be required, at the discretion of the Engineer, provided at the expense of the Contractor, in the event of non-performance of the specified testing procedures, submittals and/or installation procedures.
4. The extent and logistics of the independent testing shall be arranged by the Engineer.
5. Copper Cabling

a. Upon completion of the cable installation, the Contractor shall perform complete copper cable certification tests on every cable, included but not limited to:

1) For Category 3 Cabling and higher:

a) Wire Map
b) Length
c) Attenuation
d) Near End Cross Talk (NEXT)

2) For Category 5e Cabling, additional tests shall be:

a) Equal Level Far End Cross Talk (ELFEXT)
b) Propagation Delay and Delay Skew
c) Return Loss
d) Power Sum Near End Cross Talk (PSNEXT)
e) Power Sum Equal Level Far End Cross Talk (PSELFEXT)
f) Insertion Loss

b. Test shall be performed to published standards, including but not limited to, the latest revisions of EIA/TIA 568, ISO/IEC 11802 and other applicable standards at the time of installation.
c. All tests shall be performed with a certified Level lle or lll UTP/ScTP test device.
d. All UTP/ScTP field tester shall be factory calibrated each calendar year by the field test equipment manufacturer as stipulated by the manuals provided with the field test unit. The calibration certificate shall be provided to the Engineer for review prior to the start of testing.
e. New test leads and/or calibration of testing instruments shall be provided at the beginning of each project.
f. Autotest settings provided in the field tester for testing the installed cabling shall be set to the default parameters.
g. Test settings from options provided in the field testers shall be compatible with the installed cable under test.
h. All Category 5e channels are qualified for linear transmission performance up to 250 MHz to ensure that high frequency voltage phase and magnitude contributions do not prove cumulative or adversely affect channel performance.
i. Category 3, UTP/ScTP horizontal and backbone cables, whose length does not exceed 90 m (295 ft) for the permanent link, and 100 m (328 ft) for the channel shall be 100 percent tested according to the latest revisions of ANSI/TIA/EIA-568, and all appropriate addenda. NEXT testing shall be done in both directions.
j. Category 5e, UTP/ScTP horizontal and backbone cables, whose length does not exceed 90 m (295 ft) for the basic link, and 100 m (328 ft) for the channel shall be 100 percent tested according to the latest revisions of ANSI/TIA/EIA-568, and all appropriate addenda.
k. Category 3 and 5e backbone cables, that exceed 90 m (295 ft) or 100 m (328 ft), but less than 800 m (2, 624 ft) or 815 m (2, 674 ft), and applications warranty is desired, shall have 100 percent of the cables tested according to ISO/IEC Class A,B, or C.

B. Manufacturers' Field Services

1. As may be required for extended applications warranties by the manufacturer, the manufacturer shall provide site inspection services of the installation in completed and/or in progress. The SCC shall make all necessary arrangements for such site visits.

3.08 CLEANING

A. All equipment and Materials furnish, installed or provided shall be cleaned of all debris construction or otherwise prior to Owner final Acceptance.

3.09 DEMONSTRATION

A. Upon completion of all installation, termination and testing, the SCC shall review the entire installation with the Engineer and, at the discretion of the Owner, the Owner's authorized representative. At the time of this review, the SCC shall present the hard copies of all unadulterated test results. The Engineer and Owner will review these test results, assess the installation and return a written letter of acceptance to the SCC for the SCS.

3.10 PROTECTION

A. The SCC shall protect all aspects of the SCS from damage during the time period from the notice to proceed through the point of Owner Acceptance. The SCC shall make all corrections, replacement or repairs to any damages or changes in the installation. The financial responsibility of these corrections, replacements or repairs shall be borne by the SCC. The Engineer and Owner/Owner authorized representative shall be the sole judges of the acceptability of such corrections, replacements or repairs.

END OF SECTION 27 10 00

WHITEHALL CITY SCHOOL DISTRICT
BEECHWOOD, ETNA AND KAE ADDITIONS

DIVISION 27
TECHNOLOGY

SECTION 27 51 27
CLASSROOM AUDIO VISUAL SYSTEM

## PART 1 - GENERAL

### 1.01 RELATED DOCUMENTS

A. The provisions of the General Conditions, Supplementary Conditions, Division 1, General Requirements, are included as a part of this Section as though bound herein.

### 1.02 SYSTEM DESCRIPTION

A. The Classroom Audio Visual System shall include a classroom sound reinforcement system, as well as a projector, and all audio visual cabling required for the interconnection of same, as well as any additional cabling that may be indicated on the Drawings.

B. The classroom sound reinforcement system shall be an infrared-based sound reinforcement system designed to provide consistent sound pressure levels throughout each classroom space. The system incorporates wireless microphone technology, and the audio is dispersed by ceiling-mounted speakers.

C. The system will augment the audio from the spoken word (both teacher and student), and any other multimedia presentation material.

D. This section details the technical requirements for the Computer Network Electronics within a building. The Classroom Sound Reinforcement System shall consist of but not be limited to the following:

1. Projector (Not In Contract At This Time)

2. Projector Bracket (Not In Contract At This Time)

3. Receiver/Amplifier
4. Infrared Sensor
5. Ceiling Speakers
6. Wireless Microphones
7. Associated wiring and integration.

### 1.03 DESCRIPTION OF WORK

A. Provide labor, material, equipment, and accessories necessary for a complete, fully operable Classroom Audio Visual System. The Contractor shall furnish the equipment, accessories, and necessary material as described herein.

B. The Contractor shall include programming and complete testing of the Classroom Audio Visual System (with all devices connected to it, including computers, DVD Players, etc.).

C. The Technology Work for the Classroom Audio Visual System shall include but not limited to the following:

1. Install and test Infrared Sensor
2. Install and test ceiling speakers
3. Install and test Receiver/Amplifier
4. Install terminate and test all audio and video cabling associated with this system
5. Setup and integrate the system and connect it to the associated multimedia equipment.

1.04 QUALITY ASSURANCE

A. The equipment provided under this section shall be U.L. listed and shall bear the U.L. label. The systems shall be installed in accordance with the National Electric Code (NEC) and shall comply with the following codes and regulations:

1. National Fire Protection Association.
2. American with Disabilities Act.
3. The latest ANSI TIA/EIA-568, 569, 606, 607 Standards Tenth Edition BICSI Telecommunications Distribution Methods Manual (TDMM).
4. Federal Communications Commission Part 15.

1.05 WARRANTY

A. The system is to be left in first class operating condition and the Contractor is to warrant equipment for a period of one full year from date of substantial completion against defective materials and workmanship.

B. Upon receipt of notice from Owner of failure of any part of the new equipment during the warranty period, these parts shall be replaced (including labor) at no additional cost to the Owner.

PART 2 - PRODUCTS

2.01 RECEIVER/AMPLIFIER

A. The Receiver/Amplifier shall be a Radio frequency or Infrared light based system with wireless connectivity to the lapel and handheld microphones. The unit shall have the following features:

1. Minimum 12 Watts RMS per channel.
2. 40-20KHz frequency response
3. Two (2) microphone inputs
4. 20-band equalizer.
5. Minimum of four (4) auxiliary line inputs with individual volume controls.
6. Minimum of one (1) line output for optional ADA, wireless headphone system.
7. Basis of Design: LightSpeed 855

    a. Approved equal manufacturers: Audio Enhancement, Teach Logic and Listen Technologies

2.02 INFRARED SENSOR OR RADIO FREQUENCY

A. The sensor shall be a 360 degree ceiling mounted Infrared Sensor/Emitter with plenum rated cabling.

1. Basis of Design: LightSpeed 855

a. Approved equal manufacturers: Audio Enhancement, Teach Logic, Phonic Ear and Listen Technologies

2.03 MICROPHONES

A. Provide two (2) microphones for each classroom system. Provide the following:

1. One (1) Infrared Lavaliere or collar microphone, with batteries and charger stand.
2. One (1) Infrared Handheld microphone, with batteries and charger stand
3. Basis of Design: LightSpeed 855

a. Approved equal manufacturers: Audio Enhancement, Teach Logic and Listen Technologies

2.04 SPEAKERS

A. Provide a minimum of four (4) acoustical ceiling mounted, 360-degree dome speakers. Include acoustical back enclosure and steel ceiling tile bridge. Speakers shall meet the following minimum requirements:

1. Minimum capacity: 30-Watt.
2. Minimum frequency response 65-20,000Hz.
3. Basis of Design: LightSpeed 855
   a. Approved equal manufacturers: Audio Enhancement, Calypso, Teach Logic and Listen Technologies

2.05 WIRING

A. Classroom Sound Reinforcement System

1. All wiring for the system shall be “As Specified” by the manufacturer for optimum performance of their product. Wire gauge based on cable lengths and power ratings.
2. All wiring shall be plenum rated.

B. Video Cabling

1. VGA cabling shall be factory terminated cabling with HD-15 form factor connections completing all VGA signaling as manufactured by Extron, Liberty or RapidRun.
2. HDMI cabling shall be factory terminated cabling with an HDMI Type A connector having gold plated contacts and a minimum of standard speed performance, and as manufactured by Extron or Liberty

## PART 3 EXECUTION

### 3.01 SUBMITTALS

A. Shop Drawings

1. Provide catalog cuts of products in book form for review.
2. Provide Schematic drawings indicating the network configuration for review and approval before starting the final programming and connections of the system.

### 3.02 INSTALLATION

A. Install the system complete in accordance with the manufacturer's installation instructions.

B. Terminate Speaker wires on associated faceplate using, color-coded, binding post speaker connectors – one pair per speaker.

C. Space out speakers in classroom to provide uniform coverage.

D. Mount the Infrared Receiver/Amplifier in the wardrobe cabinet provided within the classroom.

E. Provide Line Level cabling from DVR/VCR Line Output to Auxiliary Line Input on Infrared Receiver/Amplifier. Terminate cables on associated faceplates using Red/White, Female RCA connectors on both ends.

F. Balance and adjust all volume levels.

G. Properly phase all speakers.

H. Install, terminate and test all video cabling.

I. Label all outlets and cabling.

J. Verify operation of entire system.

### 3.03 TRAINING

A. Provide eight (8) hours training for owner's personnel on the operation and maintenance of the system.

B. Provide two (2) video copies of all training.

END OF SECTION 275327

# SECTION 28 31 00

# FIRE DETECTION AND ALARM

## *(PART OF ELECTRICAL CONTRACT WORK)*

## PART 1 GENERAL

### 1.01 PREFACE

A. **ALTHOUGH SPECIFIED IN DIVISION 28, THIS WORK IS TO BE A PART OF THE ELECTRICAL CONTRACT WORK.** Electrical Contractor is responsible for the work described in this Section, unless otherwise noted.

B. **Terminology:** In this Section, the term "Contractor" shall mean the Electrical Contractor performing Work on this Project, unless otherwise noted.

C. All provisions and requirements of Division 26, "Electrical," apply to this Section.

### 1.02 RELATED DOCUMENTS

A. Section 26 05 60, "Requirements for Completion of Electrical Work."

### 1.03 DESCRIPTION

A. Provide components compatible with existing fire alarm system. Provide all software programming updates as required.

B. Provide spare parts as listed in Section 26 05 60.

### 1.04 QUALITY ASSURANCE

A. Standards:
   1. National Fire Protection Association (NFPA):
      a. 2011 NFPA 70, "National Electrical Code® (NEC)," Article 760.
      b. 2007 NFPA 72, "National Fire Alarm Code."
   2. Underwriters Laboratories, Inc. (UL) 864.
   3. Americans with Disabilities Act (ADA) Accessibility Guidelines.
   4. National Electrical Manufacturers Association (NEMA).
   5. State of Ohio: Ohio Administrative Code (OAC) 1301:7-7: 2011 Ohio Fire Code.

B. Entire installation shall comply with all of the above NFPA Standards, as well as with the requirements of the Local Fire Department.

### 1.05 MUNICIPAL LICENSE

A. Contractor shall be specifically licensed by City of Whitehall or the State of Ohio to install all fire alarm devices, panels, wiring, etc. required for this Project.

## 1.06 SOFTWARE AND PROGRAMMING

A. Contractor and Manufacturer shall provide all software and field-programming upgrades required to provide a fully operational fire alarm system.

## 1.07 MISCELLANEOUS ACCESSORIES

A. Provide any adapters, fittings, trim, or other appurtenances as necessary to install all items of equipment specified or shown on the Drawings.

B. These accessories shall be required even though they may not be shown or detailed on the Drawings.

C. Installation shall be compatible with the building construction on which the item is to be located.

D. Verify the type of construction prior to ordering the equipment item so that all required accessories are included.

## 1.08 COORDINATION OF NOMENCLATURE

A. Identify zones, addressable fire alarm devices, etc., as directed by the Construction Manager.

B. Attached to the inside of each fire alarm audio/visual power supply panel shall be a laminated plastic nameplate labeling that gives the location of that panel's 120 volt electrical source.

C. Each alarm-signaling appliance shall be labeled as to the address it is on.

## 1.09 SYSTEM RESPONSIBILITY

A. Certify that the system was installed and wired in full accordance with the Drawings and Specifications and with the wiring diagrams and written instructions furnished by the Fire Alarm System Manufacturer.

## 1.10 SUBMITTALS

A. Prior to installation of system, submit (2) sets of the following for preliminary review by the Engineer:
   1. Riser diagram of system showing all equipment, interconnecting field wiring requirements, and wire specifications.
   2. Equipment cut sheets.
   3. Other information as required by the State of Ohio, Department of Commerce, Division of Industrial Compliance, Bureau of Building Code Compliance.

B. Submit stamped and signed fire alarm drawings and equipment cut sheets from a certified fire alarm designer for final approval to the following office(s):
   1. State of Ohio, Department of Commerce, Division of State Fire Marshal.
   2. City of Whitehall Fire Prevention Department.
   3. Other Code Authority having Jurisdiction.

## PART 2 PRODUCTS

### 2.01 ALARM CONTROL PANELS

A. The existing EST Model IO64 fire alarm control panels at the Beechwood and Etna Elementary Schools shall remain.

B. The existing Notifier Model NFW2-100 fire alarm control panel at Kae Elementary School shall remain.

### 2.02 REMOTE ANNUNCIATOR PANELS

A. The existing remote annunciator panels shall remain.

### 2.03 INITIATING AND ALARM DEVICES

| ITEM | For Beechwood and Etna Elementary Schools EST MODEL NO. | For Kae Elementary School NOTIFIER MODEL NO. |
|---|---|---|
| Addressable Double-Action Manual Stations | SIGA-278 | NBG-12LX |
| Audio/Visual Alarm Horn/Strobes (ADA) | GI-HDVM | GEC3-24WR |
| Visual Alarm Strobes (ADA) | GI-VM | GES3-24WR |
| Addressable Photoelectric Ceiling Smoke Detectors with 135 Deg. F. Heat Element | SIGA-PS with SIGA-SD4 base | FSP-851T |
| Monitor Modules | SIGA-CT1 | FMM |
| Relay Modules | PAM-1 | FRM-1 |
| Control Modules | SIGA-CR | FCM-1 |

A. Strobes in large open areas shall be a minimum of 110 candelas. All other strobes shall be a minimum of 30 candelas.

B. **ALL** strobes shall be synchronized. Provide module and wiring to alarm control panel as required.

### 2.04 WIRE AND CABLE

A. Furnish only wire recommended by Fire Alarm System Manufacturer.

B. Power-limited, solid or stranded (7-strand minimum) copper, twisted, shielded or unshielded, color-coded vinyl insulation, red vinyl jacket.

C. Install wiring in conduit, unless concealed above ceiling or otherwise indicated. Wire and cable used in return air plenums shall be UL 910-listed, or installed in conduit.

D. All wire and cable shall be UL-listed and UL-labeled per requirements of 2011 NEC Article 760.

E. Acceptable Manufacturers: Belden or approved equal by Anixter or West Penn Wire Co.

## PART 3 EXECUTION

### 3.01 PANEL LOCATIONS

A. Provide revised building floor plan indicating what each zone covers and all new initiating devices in a mitered wood frame with a clear Lexan cover panel and removable back. Install on wall adjacent to alarm control panel and remote annunciator panel.

### 3.02 INSTALLATION

A. Install the system under the supervision of Manufacturer's Representative.

B. Follow the wiring instructions and drawings of the Manufacturer and file with the Construction Manager a complete digest of the wiring by its assigned purpose in the system. Also, provide a drawing to show the conduit layout of the system, so service or future expansion of the system can be accomplished with minimum of retrofitting.

C. Alarm signals shall be wired with #14 AWG wire with no more than (10) signals per circuit. SLC data loop wiring shall be #18 AWG or #16 AWG wire as recommended by the Fire Alarm System Manufacturer.

D. System addressable points shall be mapped into zones as shown on the Drawings and identified with nomenclature as selected by the Construction Manager.

E. Provide 120 volt power to operate all doors that are to close upon receipt of an alarm.

F. Bottom of all alarm-indicating devices shall be mounted 80 in. above finished floor, or 6 in. below the ceiling, whichever is lower from the ceiling.

### 3.03 CEILING LOCATION

A. Coordinate the location of all ceiling smoke and heat detectors with the Architectural Reflected Ceiling Plan, grilles, registers, sprinklers, speakers, lights, and diffusers.

### 3.04 AIR DISTRIBUTION SYSTEM SHUTDOWN

A. Shut down **ALL** air distribution equipment on any building alarm.

## 3.05 SEQUENCE OF OPERATION

A. Upon activation or operation of any existing sprinkler flow switch, fire alarm detection device, or manual pull station, the existing fire alarm system shall indicate the device in alarm on the existing alarm control panel and existing remote annunciator, and shall initiate the following sequence of events:
   1. Existing audible alarm devices shall sound, and visual alarm devices shall flash, throughout the building.
   2. All new and existing air-handling fans and equipment shall shut down.

## 3.06 TESTING AND QUALITY CONTROL

A. Initially, set all audible alarm horns at the **MINIMUM** setting. Operate audible alarm devices, measure the coverage in the building, and increase the setting of any audible alarm device as required to obtain Code-acceptable sound levels in all areas of the building.

B. Operate each initiating device and verify the operation and reporting of each device, including remote signaling of alarm. Arrange to have all testing witnessed and approved by the Code Authority having Jurisdiction.

C. Inspect, test, and make final power connections to the system as required to maintain Manufacturer's warranties. Test and adjust the system under the supervision of Manufacturer's Representative.

D. At the completion of the installation, test and demonstrate the system in accordance with NFPA 72 and Local Fire Department requirements, under the supervision of a Manufacturer's factory technician, in the presence of the Construction Manager and Architect's Representative, and as follows:
   1. Demonstrate that the complete system is free from grounds, opens, and short circuits.
   2. Perform tests to indicate that **ALL** alarm initiating devices and supervisory devices are operating normally and that all alarm and trouble signals are transmitted to the alarm control panel and reported to the Central Monitoring Station.
   3. Perform air flow, fault, and sensitivity tests on the completed, installed system. Perform time delay tests for detector response using a strip chart recorder. Adjust the time delay settings to avoid unwanted alarms. Document all tests.
   4. Perform tests on system response to verify it is within the specified range. Expose smoke to the furthest sampling point, and record system response time. Check for sampling pipe integrity and pipe blockage. Correct any problems and repeat test.

END OF SECTION 28 31 00

# SECTION 31 10 00 - SITE CLEARING

## PART 1 GENERAL

### 1.01 Summary

A. Section Includes:
1. Clear site of plant life, trees and grass.
2. Remove root system of existing shrubs.
3. Remove existing surface debris.
4. Demolition of any existing construction foundations.

B. Related Sections:
1. Section 31 25 00 - Erosion and Sediment Controls
2. Section 31 22 13 - Rough Grading.

### 1.02 REGULATORY REQUIREMENTS

A. Conform to applicable local building code for disposal of debris on site.

B. Dispose of unsuitable solid waste materials off site in a manner complying with local, state and Federal agencies having jurisdiction over the Work.

C. Coordinate clearing work with utility companies.

### 1.03 JOB CONDITIONS

A. Conduct site clearing operations to ensure minimum interference with roads, streets, walks, and other adjacent facilities.

B. Do not close or obstruct streets, walks, or other facilities without permission from appropriate authorities.

C. Provide protections necessary to prevent damage to existing improvements indicated to remain in place.

D. Schedule work of this Section so as not to interfere with work required by other Sections.

## PART 2 PRODUCTS

Not Used.

## PART 3 EXECUTION

### 3.01 EXAMINATION

A. Verify that soil erosion and water pollution controls as specified in Section 02170 are properly located and installed prior to initiating work.

3.02 CLEARING

A. Clear areas required for access to site and execution of work.

B. Method of Clearing: Use equipment and procedures as required to complete the work.

C. Remove existing shrubs, trees and other vegetation within marked areas. Grub out roots and surface rock.

D. Clear undergrowth and deadwood, without disturbing subsoil.

E. Existing trees scheduled to remain: Do not tunnel through tree roots; do not nail anything to trees; do not drive trucks over tree root system.

F. Restore existing materials, systems, or improvements damaged during work of this Section to their original condition as acceptable to Architect at no additional cost to Owner.

G. Do not burn materials on Owner's property.

H. Abandonment or removal of certain underground conduit or pipe may be included in Division 15 and 16 work and is included under work of those Divisions. Removal of abandoned underground conduit or pipe which interfaces with site clearing is included under scope of this Section.

I. Do not cover up brush and similar debris with earth.

J. Refill depressions created by removal of stumps and large roots with suitable compacted earthfill where necessary to bring grade back to its original elevation or final grade.

3.03 PROTECTIONS

A. Protect above and below grade utilities scheduled to remain.

B. Protect bench marks from damage or displacement.

C. Maintain designated site access for vehicle and pedestrian traffic.

D. Protect exposed bare earth by mulch or other approved method if site clearing operations are completed two days prior to construction, excavation, or utility installations.

3.04 DISPOSAL

A. Remove existing surface debris from site.

B. Properly dispose of debris. Notarize and certify to Owner in writing the following:
   1 . Locations where debris was disposed off site.
   2. That disposal complied with applicable environmental regulations.

END OF SECTION 31 10 00

# SECTION SP 31 20 00 - EARTH MOVING

## PART 1 - GENERAL

### 1.01 SUMMARY

A. Section Includes:
1. Building excavations.
2. Building perimeter backfilling to subgrade elevations.
3. Fill under slabs-on-grade, footings, and foundations.
4. Compaction requirements.

B. Related Sections:
1. Section 01 40 00 - Quality Requirements
2. Section SP 31 10 00 - Site Clearing
3. Section SP 31 25 00 - Erosion & Sediment Controls

C. Work Excluded:
Do excavation, trenching, backfilling, and compacting incidental to underground installations of Division 22 and 26 Work by appropriate trade. Coordinate such work with Work of this Section.

### 1.02 RELATED DOCUMENTS

A. Drawings and general provisions of the Contract, including General and Supplementary Conditions and Division 01 Specification Sections, apply to this Section.

B. Specifications throughout all Divisions of the Project Manual are directly applicable to this Section, and this Section is directly applicable to them.

### 1.03 REFERENCE STANDARDS

A. The latest published edition of a reference shall be applicable to this Project unless identified by a specific edition date.

B. All reference amendments adopted prior to the effective date of this Contract shall be applicable to this Project.

C. All materials, installation and workmanship shall comply with all applicable requirements and standards.

### 1.04 DEFINITIONS

A. Borrow: Borrow excavation shall consist of approved select fill material imported from off-site when sufficient approved select fill material is not available from excavations.

B. Clearing: Clearing shall consist in the felling, cutting up, and satisfactory disposal of trees and other vegetation designated for removal in accordance with these specifications.

C. Excavation consists of removal of material encountered to subgrade elevations indicated and subsequent disposal of materials removed.

D. Fill (in terms of volume): In terms of volume, fill is defined as a compacted post-construction volume in-place.

E. Grubbing: Grubbing shall consist of the removal of roots 1 ½ inch and larger, organic matter and debris, and stumps having a diameter of three inches or larger, to a depth of at least 18 inches below the surface and or subgrade; whichever is lower, and the disposal thereof.

F. Base Course: The layer placed between the subgrade and surface pavement in a paving system.

G. Regular Excavation: Removal and disposal of any and all material above subgrade elevation, except solid rock and undercut excavation, located within the limits of construction.

H. Rock Excavation: Removal and satisfactory disposal of all unsuitable materials, which, in the opinion of the A/E, cannot be excavated except by drilling, blasting, wedging, jack hammering or hoe ramming. It shall consist of un-decomposed stone, hard enough to ring under hammer. All boulders containing a volume of more than ½ cubic yard and/or solid ledges, bedded deposits, un-stratified masses and conglomerations of material so firmly cemented as to possess the characteristics of solid rock which cannot be removed without systematic drilling, blasting, or hoe ramming will be classified as rock.

I. Drainage Fill: Course of washed granular material supporting slab on grade placed to cut off upward capillary flow of pore water.

J. Unauthorized excavation consists of removal of materials beyond indicated subgrade elevations or dimensions without specific direction of Owner. Unauthorized excavation, as well as remedial work directed by Owner, shall be at Contractor's expense.

   1. Under footings, foundation bases, or retaining walls, fill unauthorized excavation by extending indicated bottom elevation of footing or base to excavation bottom, without altering required top elevation. Lean concrete fill may be used to bring elevations to proper position, when acceptable to Owner.

   2. In locations other than those above, backfill and compact unauthorized excavations as specified for authorized excavations of same classification, unless otherwise directed by Owner.

K. Select Fill Material: Non-plastic material obtained from roadway cuts, borrow areas, or commercial sources used as foundation for subgrade, shoulder surfacing, fill, backfill, or other specific purposes.

L. Engineered Fill: Select fill as defined above.

M. Structures: Incidental buildings, footings, foundations, retaining walls, slabs, tanks, curbs, mechanical and electrical appurtenances, or other man-made stationary features constructed above or below the ground surface.

N. Topsoil: Topsoil shall consist of friable clay loam, free from roots, stones, and other undesirable material and shall be capable of supporting a good growth of grass.

O. Undercut Excavation: Undercut excavation shall consist of the removal and satisfactory disposal of all unsuitable material located below subgrade elevation. Where excavation to the finished grade section results in a subgrade or slopes of muck, peat, matted roots or other unsuitable materials, the Contractor shall immediately notify the A/E.

P. Additional Excavation: When excavation has reached required subgrade elevations, notify Owner, who will make an inspection of conditions. If Owner determines that bearing materials at required subgrade elevations are unsuitable, continue excavation until suitable bearing materials are encountered and replace excavated material as directed by Owner. The Contract Sum may be adjusted by an appropriate Contract Modification.

1. Removal of unsuitable material and its replacement as directed will be paid on basis of Conditions of the Contract relative to changes in work.

Q. Subgrade: The undisturbed earth or the compacted soil layer immediately below granular base, drainage fill, or topsoil materials.

## 1.05 SUBMITTALS

A. Material Test Reports: Provide from a qualified testing agency test results and interpretation for compliance of the following requirements indicated:

1. Classification according ASTM D2487 of each on-site or borrow soil proposed for backfill, unless otherwise directed by the A/E.

2. Laboratory compaction curve according to ASTM D698 for each on-site or borrow soil material proposed for fill or backfill.

3. Laboratory analysis reports indicating compliance with ODOT specifications for all granular materials including bedding, backfill and pavement base.

4. Field Test Results for each test group as required in item 3.18 of this specification.

## 1.06 QUALITY ASSURANCE

A. Geotechnical Testing Agency Qualifications: An independent testing agency qualified

according to ASTM E 329 to conduct soil materials and rock-definition testing as documented according to ASTM D 3740 and ASTM E 548. Comply with all codes, laws, ordinances, and regulations of governmental authorities having jurisdiction over this part of the work.

B. The Contractor shall comply with the latest revision of the Occupational Safety and Health Standards for the Construction Industry.

C. Materials and operations shall comply with the latest revision of the Codes and Standards listed below:

***Ohio Department of Transportation***

***ODOT-CMS*** Construction and Materials Specifications, Current Edition

***American Society for Testing and Materials***

**ASTM C 33** Concrete Aggregates

**ASTM C 136** Standard Test Method for Sieve Analysis of Fine and Coarse Aggregates Sieve Analysis of Fine and Coarse Aggregate

**ASTM D 422** Standard Test Method for Particle-Size Analysis of Soils (for classification purposes only)

**ASTM D 698** Test Method for Laboratory Compaction Characteristics of Soil Using Standard Effort (12,400 ft-lbf/ft$^3$) (Standard Proctor)

**ASTM D 1556** Standard Method of Test for Density of Soil in Place by the Sand-Cone Method

**ASTM D 1557** Test Method for Laboratory Compaction Characteristics of Soil Using Modified Effort (56,000 ft-lbf/ft$^3$) (Modified Proctor)

**ASTM D1883** Standard Test Method for CBR (California Bearing Ratio) of Laboratory-Compacted Soils

**ASTM D 2049** Standard Method of Test for Relative Density of Cohesionless Soils

**ASTM D2167** Standard Method of Test for Density of Soil in Place by the Rubber-Balloon Method

**ASTM D 2487** Standard Classification of Soils for Engineering Purposes (Unified Soil Classification System)

**ASTM D 2922** Test Methods for Density of Soil and Soil-Aggregate in Place by Nuclear Methods (Shallow Depth)

**ASTM D 4253** Standard Test Methods for Maximum Index Density and Unit Weight of Soils Using a Vibratory Table

**ASTM D 4254** Test Method for Minimum Index Density and Unit Weight of Soils and Calculation of Relative Density

**ASTM D 4318** Test Method for Liquid Limit, Plastic Limit, and Plasticity Index of Soils

***American Association of State Highway & Transportation Officials***

**AASHTO T 99** The Moisture-Density Relations of Soils using a 5.5-pound hammer and a 12-inch drop

**AASHTO T 180** The Moisture Density Relations of Soils using a 10-pound hammer and an 18-inch drop

**ASHTO M 145** The Classification of Soils and Soil-Aggregate Mixtures for Highway Construction

1.07 STANDARD ABBREVIATIONS

**ANSI** American National Standards Institute
**MSDS** Material Safety Data Sheets
**OSHA** Occupational Safety and Health Administration
**ODOT** Ohio Department of Transportation

1.08 TESTING SERVICES

A. The Testing Laboratory shall be approved by the A/E and will be responsible for conducting and interpreting tests. The Testing Laboratory shall state in each report whether or not the test specimens conform to all requirements of the Contract Documents and specifically note any deviation.

B. Specific test and inspection requirements shall be as specified herein.

1.09 PROJECT CONDITIONS

A. Site Information: Data in subsurface investigation reports was used for the basis of the design and are available to the Contractor for information only. Conditions are not intended as representations or warranties of accuracy or continuity between soil borings. The Owner will not be responsible for interpretations or conclusions drawn from this data by Contractor.

1. Additional test borings and other exploratory operations may be performed by Contractor, at the Contractor's option; however, no change in the Contract Sum will be authorized for such additional exploration.

B. Existing Utilities: The contractor shall contact the Ohio Utilities Protection Service, the Owner of the Utility, and Locate existing underground utilities in areas of excavation work. If utilities are indicated to remain in place, provide adequate means of support and protection during earthwork operations.

1. Should uncharted, or incorrectly charted, piping or other utilities be encountered during excavation, consult utility Owner immediately for directions. Cooperate with Owner and utility companies in keeping respective services and facilities in operation. Repair damaged utilities to satisfaction of utility Owner.

2. Do not interrupt existing utilities serving facilities occupied by Owner or others, during occupied hours, except when permitted in writing by Owner and then only after acceptable temporary utility services have been provided.

a. Provide minimum of 48 hour notice to Owner, and receive written notice to proceed before interrupting any utility.

3. Demolish and completely remove from Site existing underground utilities indicated to be removed. Coordinate with utility companies for shutoff of services if lines are active.

C. The use of explosives is not permitted.

D. Barricade open excavations occurring as part of this work and post with warning lights.

1. Operate warning lights as recommended by authorities having jurisdiction.

2. Protect structures, utilities, sidewalks, pavements, and other facilities from damage caused by settlement, lateral movement, undermining, washout, and other hazards created by earthwork operations.

3. Perform excavation by hand within dripline of large trees to remain. Protect root systems from damage or dryout to the greatest extent possible. Maintain moist condition for root system and cover exposed roots with moistened burlap.

E. Geotechnical Investigation

1. Where a Geotechnical report has been provided to the Contractor, the data on sub-surface soil conditions is not intended as a representation or warranty of the continuity of such conditions between borings or indicated sampling locations. It shall be expressly understood that the Owner will not be responsible for any interpretations or conclusions drawn there from by the Contractor. Data is made available for the convenience of the Contractor.

2. In addition to any report that may be made available to the Contractor, the Contractor is responsible for performing any other soil investigations he/they feel(s) is necessary for proper evaluation of the site for the purposes of planning and/or bidding the project, at no additional cost to the Owner.

F. Environmental: Before crossing or entering into any jurisdictional wetlands, Contractor shall verify whether or not a wetlands permit has been obtained for the encroachment and whether special restrictions have been imposed. Care shall be taken to prevent draining or otherwise destroying non-permitted wetlands. Restore as stated on either the project drawings, the contract documents, and/or as noted in the permit.

1.10 COORDINATION

A. Coordinate tie-ins to municipal system with the City of Whitehall.
B. When traffic signals or their appurtenances are likely to be damaged or interfered with as a result of the construction, coordinate temporary operation with the City of Whitehall Traffic Engineer. Provide a minimum of 48 hours notice prior to anticipated disturbance or interruption.
C. Benchmark/Monument Protection: Protect and maintain benchmarks, monuments or other established reference points and property corners. If disturbed or destroyed, replace at own expense to full satisfaction of Owner/City of Whitehall.

## PART 2 - PRODUCTS

### 2.01 GENERAL

A. All materials shall meet or exceed all applicable referenced standards, federal, state and local requirements, and conform to codes and ordinances of authorities having jurisdiction.

### 2.02 SOIL MATERIALS

A. Provide approved borrow soil materials from off Site when sufficient approved soil materials are not available from excavations. The contractor shall make their own determination regarding the need to bring in fill or haul off excess material and provide fill or haul-off at no additional cost to the owner.

B. Satisfactory Soil Materials: ASTM D 2487 soil classification groups (Unified Classification System) GW, GP, GM, SW, SP, and SM; free of rock or gravel larger than 2 inches in any dimension, debris, waste, frozen materials, vegetation and other deleterious matter.

C. Unsatisfactory Soil Materials: ASTM D 2487 soil classification groups GC, SC, ML, MH, CL, CH, OL, OH, and PT; soils that contain rock or gravel larger than 2 inches in any dimension, debris, organic matter, waste, frozen materials, muck, roots, vegetation, and other deleterious matter. Unsatisfactory soils also include satisfactory soils not maintained within 20-percent of optimum moisture content at time of compaction, unless otherwise approved by either the A/E or a Geotechnical Engineer.

D. Select Fill Material: Sandy clay or clayey sand with a Plasticity Index of between 7 and 20, with a minimum Liquid Limit of 30, with less than 50 percent by weight passing a No. 200 sieve, and free of rock or gravel larger than 2 inches in any dimension, debris, waste, vegetable, or other deleterious matter.

E. Bedding Material: Unless otherwise indicated; base materials with 100 percent passing a 1 inch sieve and not more than 8 percent passing a No. 200 sieve.

F. Drainage Fill: Uniformly graded mixture of natural or crushed gravel, crushed stone, and natural sand, conforming to the fine aggregate (Concrete Sand) requirements of ASTM C 33, with 100 percent passing a ¼ inch sieve and 2 percent to 10 percent passing a No. 100 sieve.

G. Filtering Material: Uniformly graded mixture of natural or crushed gravel, or crushed stone and natural sand conforming to ASTM C 33, Coarse Aggregate Size No. 67, with 100 percent passing a 1 inch sieve and 0 percent to 5 percent passing a No. 8 sieve.

H. Impervious Fill: Lean clay with a Liquid Limit of less than 50 and capable of compacting to a dense composite.

I. Cement Stabilized Sand Backfill Material: Uniformly graded mixture of natural or crushed stone, crushed slag or natural or crushed sand conforming to the fine aggregate (Concrete Sand) requirements of ASTM C 33 with 100 percent passing a ¼ inch sieve and less than 15 percent passing a No. 200 sieve and not less than 1½ sacks of portland cement conforming to ASTM C 150, Type 1 requirements per cu. yd. of mixture and enough water free of deleterious materials to produce a mix suitable for mechanical hand compaction. Stamp batch tickets at plant with time of loading. Material not compacted in place 1 1/2 hours after loading or material which has taken an initial set will be rejected and shall be removed from the Project Site.

J. Topsoil: Topsoil meeting the definition prescribed in paragraph 1.04 and meeting the requirements of specification section SP 32 91 19 Landscape Grading obtained either from on-site or an off-site source.

K. Rock Channel Protection, Riprap and Riprap Bedding: Per ODOT Item 601.

2.03 ACCESSORIES

A. Detectable Warning Tape: Acid and alkali resistant polyethylene film warning tape manufactured for marking and identifying underground utilities, 6 inches wide and 4 mils thick minimum, continuously inscribed with a description of the utility, with metallic core encased in a protective jacket for corrosion protection, detectable by metal detector when tape is buried up to thirty inches deep.

1. Provide tape colors to utilities as follows:

a. Red: Electric
b. Yellow: Gas, oil, steam, and dangerous materials
c. Orange: Telephone and other communications
d. Blue: Water systems
e. Green: Sewer systems

PART 3 - EXECUTION

3.01 GENERAL

A. Contractor shall plan construction to minimize disturbance to properties adjacent to the project site and be within the construction limits shown on the plans.
B. The A/E reserves the right to limit the width of land to be disturbed and to designate on the drawings or in the field certain areas or items within this width to be protected from damage.
C. The Contractor shall provide any grading or excavation required for equipment travel during the course of construction as well as erosion control, access or haul road installation and removal, restoration, seeding and ground cover.
D. The Contractor shall be responsible for damage to areas or items designated by the A/E to be protected. Repairs to, replacement of, or reparations for areas or items damaged shall be made at the Contractor's expense and to the satisfaction of the A/E before acceptance of the

completed project.

E. Any fences disturbed by the Contractor shall be repaired to a condition equal to or better than their original condition or to the satisfaction of the A/E at no additional cost.
F. Contractor shall obtain written permission from property owners for use of any access other than ones located within rights-of-way. Written permission shall contain conditions for use and restoration agreements between property owner and Contractor. No additional compensation will be made for such access.
G. All areas disturbed shall be restored to a condition equal to or better than their original condition and shall be graded to drain.
H. The Contractor shall protect, replace or repair all damaged or destroyed property pins or other monumentation.

3.02 PROTECTION OF EXISTING UTILITIES

A. Contractor is responsible for locating and protecting existing utilities.
B. If existing utilities are found to interfere with the permanent facilities being constructed under this section, immediately notify the A/E and secure instructions. Do not proceed with permanent relocation of utilities until instructions are received from the A/E.

3.03 TOPSOIL REMOVAL

A. Remove the existing topsoil to a depth of 6 inches or to the depth encountered from all areas in which excavation will occur. The topsoil shall be stored in stockpiles, separate from the excavated material, if the topsoil is to be re-spread. Otherwise material shall be disposed of off-site at the Contractor's expense.
B. The contractor shall employ erosion control methods per specification SP 31 25 00 Erosion & Sediment control for all stockpiled material.
A.

3.04 INSTALLATION

A. Installation shall meet or exceed all applicable federal, state and local requirements, referenced standards and conform to codes and ordinances of authorities having jurisdiction.

B. All installation shall be in accordance with manufacturer's published recommendations.

3.05 EXCAVATION

A. Excavation is unclassified and includes excavation to subgrade elevations indicated, regardless of character of materials and obstructions encountered.

B. Excavation shall be performed as indicated on the plans or as directed by the A/E to the lines, grades, and elevations, and shall be finished to a reasonable smooth and uniform surface. During the process of excavation, the grade shall be maintained and surface shall be rolled so that it will be well drained at all times.

When solid rock is incurred in the excavation, the rock shall be removed to a minimum depth of 12 inches below the surface of the subgrade. Material unsatisfactory for subgrade foundation shall be removed to a depth specified to provide a satisfactory foundation. The portion so excavated shall be refilled with suitable material obtained from the grading operations or borrow area and thoroughly compacted by rolling. Material obtained from on-site grading operations must be approved by the A/E. For areas that do not require fill, scarify and compact to a depth of 6 inches.

Any removal, manipulation, aeration, replacement, and recompaction of suitable materials necessary to obtain the required density shall be considered as incidental to the construction operations, and shall be performed by the Contractor at no additional cost to the Owner.

No rock, stone, or rock fragments, larger than 2 inches in their greatest dimension will be permitted in the top 12 inches of the subgrade. No rock, stone, or rock fragments larger than 8 inches in their greatest dimension will be permitted in the remainder of the fill.

## 3.06 STABILITY OF EXCAVATIONS

A. Comply with OSHA, local codes, ordinances, and requirements of agencies having jurisdiction.

B. Slope sides of excavations to comply with OSHA, local codes, ordinances, and requirements of agencies having jurisdiction. Shore and brace where sloping is not possible because of space restrictions or stability of material excavated. Maintain sides and slopes of excavations in safe condition until completion of backfilling.

C. Shoring and Bracing: Provide materials for shoring and bracing, such as sheet piling, uprights, stringers, and cross braces, in good serviceable condition. Maintain shoring and bracing in excavations regardless of time period excavations will be open. Extend shoring and bracing as excavation progresses.

   1. Provide permanent steel sheet piling or pressure creosoted timber sheet piling wherever subsequent removal of sheet piling might permit lateral movement of soil under adjacent structures. Cut off tops a minimum of thirty inches below final grade and leave permanently in place.

## 3.07 DEWATERING

A. Prevent surface water and subsurface or ground water from flowing into excavations and from flooding Project Site and surrounding area. Provide erosion control methods for dewatering operations in conformance with Specification SP 31 25 00 Erosion & Sediment Controls.

1. Do not allow water to accumulate in excavations. Remove water to prevent softening of foundation bottoms, undercutting footings, and soil changes detrimental to stability of subgrades and foundations. Provide and maintain pumps, well points, sumps, suction and discharge lines, and other dewatering system components necessary to convey water away from excavations.

2. Establish and maintain temporary drainage ditches and other diversions outside excavation limits to convey rain water and water removed from excavations to collecting or runoff areas. Do not use trench excavations as temporary drainage ditches.

3.08 STORAGE OF EXCAVATED MATERIALS

A. Stockpile excavated materials acceptable for backfill and fill where directed. Place, grade, and shape stockpiles for proper drainage. Provide erosion control measures as needed per specification SP 31 25 00 Erosion & Sediment Controls.

1. Locate and retain soil materials away from edge of excavations. Do not store within drip line of trees indicated to remain.

2. Dispose of excess excavated soil material and materials not acceptable for use as backfill or fill.

3.09 EXCAVATION FOR STRUCTURES

A. Conform to elevations and dimensions shown within a tolerance of plus or minus 0.10 foot, and extending a sufficient distance from footings and foundations to permit placing and removal of concrete formwork, installation of services, and other construction and for inspection.

1. Excavations for footings and foundations: Do not disturb bottom of excavation. Excavate by hand to final grade just before concrete reinforcement is placed. Trim bottoms to required lines and grades to leave solid base to receive other work.

2. For pile foundations, stop excavations from 6 inches to 12 inches above bottom of footing before piles are placed. After piles have been driven, remove loose and displaced material. Excavate to final grade, leaving solid base to receive concrete pile caps.

3. Excavation for Underground Tanks, Basins, and Mechanical or Electrical Structures: Conform to elevations and dimensions indicated within a tolerance of plus or minus 0.10 foot; plus a sufficient distance to permit placing and removal of concrete formwork, installation of services, and other construction and for inspection. Do not disturb bottom of excavations, intended for bearing surface.

3.10 EXCAVATION FOR PAVEMENTS

A. Cut surface under pavements to comply with cross sections, elevations and grades as indicated.

B. Areas to be Paved: After all excavation, undercutting, and backfilling has been completed, the subgrade shall be properly shaped and thoroughly compacted. The compactive effort shall include all areas beneath pavement and shall extend at least a minimum of 1 foot beyond the paving/berm limits. Compaction shall be in accordance with Table 31 20 00-1.

C. Curb and Gutter, Sidewalks and Driveway Aprons: The subgrade shall be constructed true to grade and cross section as may be shown on the drawings. Compaction shall be in accordance with Table 31 20 00-1.

D. All subgrade shall be graded and protected as to prevent an accumulation or standing water, and consequent subgrade saturation, in the event of rain.

E. Grading Tolerances of Finished Surface: Earthwork shall conform to the lines, grades, and typical cross sections shown on the plans or as established by the A/E. Changes in grade shall be accomplished by smooth curves.

1. Shape subgrade under pavement and curb and gutter to within ½ inch of required subgrade elevations.

2. Finish pavement and curb and gutter to within ½ inch of required finish elevations.

3. Shape subgrade under sidewalks to within 0.10 foot of required subgrade elevations.

4. Finish sidewalks to within 0.10 foot of required finish elevations.

F. Backfill of Curb and Gutter and Sidewalks: Immediately after the removal of forms for curb and gutter, sidewalks and driveways, the space between the back of the curb, sidewalks, and driveways shall be backfilled and smoothed off in a manner to prevent the accumulation of standing water.

3.11 TRENCH EXCAVATION FOR PIPES AND CONDUIT

A. Excavate trenches to uniform width, sufficiently wide to provide ample working room and a minimum of 6 and a maximum of 12 inches of clearance on both sides of pipe or conduit, unless otherwise specified on the construction drawings.

B. Excavate trenches and conduit to depth indicated or required to establish indicated slope and invert elevations and to support bottom of pipe or conduit on undisturbed soil. Beyond building perimeter, excavate trenches to allow installation of top of pipe below frost line.

1. Where rock is encountered, carry excavation 6 inches below required elevation and backfill with a 6 inch layer of crushed stone or gravel prior to installation of pipe.

2. For pipes or conduit less than 6 inches in nominal size, and for flat bottomed, multiple duct conduit units, do not excavate beyond indicated depths. Hand excavate bottom cut to accurate elevations and support pipe or conduit on undisturbed soil or specified bedding.

3. For pipes and equipment 6 inches or larger in nominal size, shape bottom of trench to fit bottom of pipe for 90 degrees (bottom 1/4 of the circumference). Fill depressions with specified backfill. At each pipe joint, dig bell holes to relieve pipe bell of loads ensure continuous bearing of pipe barrel on bearing surface.

3.12 EXCAVATING AND PLACING FOUNDATION DRAINAGE SYSTEM

A. Excavate for foundation drainage system after subgrade material has been compacted but before drainage fill course has been placed. Provide a clear horizontal distance between drain pipe and trench wall on both sides not less than 2 times the diameter of the drain pipe, unless otherwise shown. Grade the bottom of trench excavations to required slope and compact to a firm, solid bed for drain system. Place and compact impervious fill material to raise low areas or where unsatisfactory bearing soil may occur.

B. After concrete footings have been cured and forms removed, place impervious fill material on the subgrade adjacent to the bottom of the footing. Place and compact impervious fill to the dimensions indicated or, if not indicated, 6 inches deep and 12 inches wide.

1. Place a supporting layer of drainage fill material over compacted subgrade where drainage pipe is to be laid to the depth indicated or, if not indicated, to a compacted depth of not less than 3 inches, followed by a 6 inch layer of compacted filtering material below pipe.

2. Place sufficient width of filter fabric in trench to cover perimeter of drainage material plus overlap. Place a supporting layer of drainage fill material over filter fabric where drainage pipe is to be laid to the depth indicated or, if not indicated, to a compacted depth of not less than 2 inches.

C. Lay drain pipe solidly bedded in drainage fill material. Provide full bearing for each pipe section throughout its length, to true grades and alignment, and continuous slope in the direction of flow.

1. Lay perforated pipe with perforations down and joints tightly closed in accordance with pipe manufacturer's recommendations. Provide collars and couplings as required.

2. Provide recesses in the excavation bottom to receive bells for drain pipe having bell and spigot ends. Lay pipe with bells facing up the slope with spigot end entered fully into adjacent bell. Seal joint in accordance with local practices having jurisdiction.

D. Test or check lines before backfilling to assure free flow. Remove obstructions, replace damaged components, and retest system until satisfactory.

E. After testing of drain lines, place additional drainage fill material as follows:

1. At exterior perimeter drainage system, completely cover drain lines to a width of at least 6 inches on each side and 12 inches above top of pipe with material unless more coverage is indicated on the Drawings. Place material in layers not exceeding 3 inches in loose depth and compact each layer placed.

2. At under slab drainage system, provide a minimum of 6 inches on top of drains and 12 inches around sides of drains.

3. Unless otherwise indicated, backfill exterior perimeter drainage system with drainage fill material over filtering material to within 18 inches of indicated finished grade elevations.

4. Place drainage fill material over underslab drainage system (maximum 6 inch lifts) and compact.

F. Apply impervious fill material over compacted drainage fill material at exterior perimeter drains, placing the material in layers not exceeding 6 inches in loose depth and thoroughly compacting each layer. Carry impervious fill to indicated finish elevations (except carry to 6 inches below finished grade where indicated to receive topsoil) and slope away from building perimeter.

3.13 BACKFILL AND FILL

A. Place soil material in layers to required subgrade elevations, for each area classification listed below, using materials specified in Part 2 of this Section unless indicated otherwise on the construction drawings.

1. Under grassed areas, use satisfactory excavated or borrow material.

2. Under walks and pavements, use base material, satisfactory excavated or borrow material, or a combination.

3. Under steps, use base material.

4. Under building slabs, use 12” of drainage fill material over satisfactory material.

5. Under piping and conduit and equipment, use select fill materials where required over rock bearing surface and for correction of unauthorized excavation. Shape excavation bottom to fit bottom 90 degrees of cylinder.

6. Backfill trenches with concrete where trench excavations pass within 18 inches of column or wall footings and that are carried below bottom of such footings or that pass under wall footings. Place concrete to level of bottom of adjacent footing.

a. Do not backfill trenches until tests and inspections have been made and backfilling is authorized by Owner. Use care in backfilling to avoid damage or displacement of pipe systems.

B. Install warning tape directly above utilities, 12 inches below finished grade, except 6 inches below subgrade under pavements and slabs.

C. Backfill excavations as promptly as work permits, but not until completion of the following:

1. Acceptance of construction below finish grade including, where applicable, dampproofing, waterproofing, and perimeter insulation.

2. Inspection, testing, approval, and recording locations of underground utilities have been performed and recorded.

3. Removal of concrete formwork.

4. Removal of shoring and bracing, and backfilling of voids with satisfactory materials. Cut off temporary sheet piling driven below bottom of structures and remove in manner to prevent settlement of the structure or utilities, or leave in place if required.

5. Removal of trash and debris from excavation.

6. Permanent or temporary horizontal bracing is in place on horizontally supported walls.

3.14 PLACEMENT AND COMPACTION

A. Ground Surface Preparation: Remove vegetation, debris, unsatisfactory soil materials, obstructions, and deleterious materials from ground surface prior to placement of fills. Plow strip, or break up sloped surfaces steeper than 1 vertical to 4 horizontal so that fill material will bond with existing surface.

   1. When existing ground surface has a density less than that specified under "Compaction" for particular area classification, break up ground surface, pulverize, moisture condition to optimum moisture content, and compact to required depth and percentage of maximum density.

B. Place backfill and fill materials in layers not more than 8 inches in loose depth for material compacted by heavy compaction equipment, and not more than 4 inches in loose depth for material compacted by hand operated tampers.

C. Before compaction, moisten or aerate each layer as necessary to provide optimum moisture content. Compact each layer to required percentage of maximum dry density or relative dry density for each area classification. Do not place backfill or fill material on surfaces that are muddy, frozen, or contain frost or ice.

D. Place backfill and fill materials evenly adjacent to structures, piping, or conduit to required elevations. Prevent wedging action of backfill against structures or displacement of piping or conduit by carrying material uniformly around structure, piping, or conduit to approximately same elevation in each lift.

E. Minimum Compaction Requirements: Compaction percentages are percentages of maximum dry density as determined by indicated ASTM Standards. Unless otherwise recommended by a Geotechnical Engineer and authorized by the A/E, the material shall be placed at plus or minus 3% of optimum moisture content.

| Table 31 20 00.1 | |
|---|---|
| **Minimum Compaction Limits** | |
| **Location** | **Density** |
| Beneath and within 5 feet of buildings | 98% of the maximum dry density by ASTM D 698 (Standard Proctor), AASHTO T-99 |
| Areas under roadway pavement surfaces, shoulders, sidewalks, and curb and gutter | 98% of the maximum dry density by ASTM D 698 (Standard Proctor), AASHTO T-99 |
| Under turf, sodded, planted, landscaped, or seeded non-traffic areas | 95% of the maximum dry density by ASTM D 698 (Standard Proctor) AASHTO T-99 |

1. Compactive Efforts: If compaction efforts should fail to provide a stable subgrade, after subgrade materials have been shaped and brought to optimum moisture, such unstable materials shall be removed to the extent directed by either the Geotechnical Engineer or the A/E and replaced and compacted using new select material.

2. Moisture Control: Where subgrade or layer of soil material must be moisture conditioned before compaction, uniformly apply water to surface of subgrade or layer of soil material. Apply water in minimum quantity as necessary to prevent free water from appearing on surface during or subsequent to compaction operations.

   a. Remove and replace, or scarify and air dry, soil material that is too wet to permit compaction to specified density.
   b. Stockpile or spread soil material that has been removed because it is too wet to permit compaction. Assist drying by discing, harrowing, or pulverizing until moisture content is reduced to a satisfactory value.

3.15 GRADING

A. Uniformly grade areas within limits of grading under this section, including adjacent transition areas. Smooth finished surface within specified tolerances, compact with uniform levels or slopes between points where elevations are indicated or between such points and existing grades.

B. Grading Outside Building Lines: Grade areas adjacent to building lines to drain away from building s ntructures and to prevent ponding. Finish surfaces free from irregular surface changes and as follows:

1. Lawn or Unpaved Areas: Finish areas to receive topsoil to within not more than 0.10 foot above or below required subgrade elevations.

2. Walks: Shape surface of areas under walks to line, grade, and cross section, with finish surface not more than 0.10 foot above or below required subgrade elevation.

3. Pavements: Shape surface of areas under pavement to line, grade, and cross section, with finish surface not more than ½ inch above or below required subgrade elevation.

C. Grading Surface of Fill under Building Slabs: Grade smooth and even, free of voids, compacted as specified, and to required elevation. Provide final grades within a tolerance of 1/2 inch when tested with a 10 foot straightedge.

D. Compaction: After grading, compact subgrade surfaces to the depth and indicated percentage of maximum or relative density for each area classification.

3.16 PAVEMENT BASE COURSE

A. Base course consists of placing base material, in layers of specified thickness, over subgrade surface to support a pavement base course.

B. During construction, maintain lines and grades including crown and cross slope.

C. Place berms, shoulders, or extended base course as indicated on the construction drawings. Construct shoulder subgrade of acceptable soil materials, placed in such quantity to compact to thickness of each subgrade course layer. Compact and roll at least a 12 inch width of shoulder simultaneous with the compaction and rolling of each layer of subgrade course.

D. Place base course material on prepared subgrade in layers of uniform thickness, conforming to indicated cross section and thickness. Maintain optimum moisture content for compacting subgrade material during placement operations.

3.17 BUILDING SLAB DRAINAGE COURSE

A. Drainage course consists of placement of drainage fill material, in layers of indicated thickness, over subgrade surface to support concrete building slabs.

B. Place drainage fill material on prepared subgrade in layers of uniform thickness, conforming to indicated cross section and thickness. Maintain optimum moisture content for compacting material during placement operations.

1. When a compacted drainage course is indicated to be 6 inches thick or less, place material in a single layer. When indicated to be more than 6 inches thick, place material in equal layers, except no single layer more than 6 inches or less than 3 inches in thickness when compacted.

3.18 FIELD QUALITY CONTROL

A. Quality Control Testing During Construction: Allow testing service to inspect and approve each subgrade and fill layer before further backfill or construction work is performed.

1. Perform field in place density tests according to ASTM D 1556 (sand cone method), ASTM D 2167 (rubber balloon method), or ASTM D 2937 (drive cylinder method), as applicable.

a. Field in place density tests may also be performed by the nuclear method according to ASTM D 2922, provided that calibration curves are periodically checked and adjusted to correlate to tests performed using ASTM D 1556. With each density calibration check, check the calibration curves furnished with the moisture gages according to ASTM D 3017.
b. When field in place density tests are performed using nuclear methods, make calibration checks of both density and moisture gages at beginning of work, on each different type of material encountered, and at intervals as directed by the Owner.

B. Minimum Compaction Testing Frequency: A test group shall consist of compaction tests on each layer of fill and backfill material. One (1) test group shall be performed and summarized written results provided at the frequencies and locations as follows:

| Location: | Frequency: |
|---|---|
| Buildings and structures | Every 5,000 square feet. |
| Roads, Drives | Every 300 feet of road, drive |
| Parking Lots | Every 10,000 square feet of pavement |
| Unpaved Areas | Every 20,000 square feet |
| Pipe Trench | Every 300 feet of trench |

1. In the absence of a pre-construction Geotechnical investigation, the Geotechnical testing firm is to perform laboratory Proctor tests to establish a moisture-density relationship for all materials that are proposed to be used as fill.

2. Contractor shall give a 24-hour notice to Geotechnical testing firm when ready for Proctor, compaction, or subgrade testing and inspection.

3. Should any moisture-density test fail to meet specification requirements, the Contractor shall perform corrective work necessary to bring the material in compliance and retest the failed area at no additional cost to the Owner.

C. Footing Subgrade: At footing subgrades, perform at least one test of each soil stratum to verify design bearing capacities. Subsequent verification and approval of other footing subgrades may be based on a visual comparison of each subgrade with related tested strata when acceptable to the Owner.

D. When testing agency reports that subgrades, fills, or backfills are below specified density, scarify and moisten or aerate, or remove and replace soil to the depth required, recompact and retest until required density is obtained.

3.19 EROSION CONTROL

A. Provide erosion control methods in accordance with requirements of authorities having jurisdiction.

B. The Contractor shall comply with the requirements of the Ohio Environmental Protection Agency Construction Stormwater General Permit (OHC00003), the Ohio Department of Natural Resources "Ohio's Standards for Storm Water Management, Land Development and Urban Stream Protection", and the Wayne County Soil and Water Conservation District; latest revision.

3.20 MAINTENANCE

A. Protect newly graded areas from traffic and erosion. Keep free of trash and debris.

B. Repair and reestablish grades in settled, eroded, and rutted areas to specified tolerances.

C. Where completed compacted areas are disturbed by subsequent construction operations or adverse weather, scarify surface, reshape, and compact to required density prior to further construction.

D. Where settling is measurable or observable at excavated areas during general Project warranty period, remove surface (pavement, lawn, or other finish), add backfill material, compact, and replace surface treatment. Restore appearance, quality, and condition of surface or finish to match adjacent work, and eliminate evidence of restoration to greatest extent possible.

3.21 DISPOSAL OF EXCESS AND WASTE MATERIALS

A. Removal to Designated Areas on Owner's Property: Transport acceptable excess excavated material to designated soil storage areas on Owner's property. Stockpile soil or spread as directed by Owner.

1. Transport waste material, including unacceptable excavated material, trash, and debris to designated spoil areas on Owner's property and dispose of as directed.

B. Removal from Owner's Property: Remove waste materials, including unacceptable excavated material, trash, and debris, and dispose of it off Owner's property.

1. Remove excess excavated material, trash, debris, and waste materials and dispose of it off Owner's property.

END OF SECTION SP 31 01 00

# SECTION 31 22 13 - ROUGH GRADING

## PART 1 GENERAL

### 1.01 SUMMARY

A. Section Includes:

1. Remove topsoil and stockpile for later reuse. Remove excess from site.
2. Excavate subsoil and stockpile for later reuse. Remove excess from site.
3. Grade and rough contour site.

B. Related Sections:
1. Section 31 10 00 - Site Clearing.
2. Section 31 25 00 – Erosion & Sediment Controls.

### 1.02 PROJECT RECORD DOCUMENTS

A. Submit record documents at contract closeout.

B. Accurately record location of utilities remaining, rerouted utilities, new utilities by horizontal dimensions, elevations or inverts, and slope gradients.

### 1.03 PROTECTION

A. Protect bench marks, roads, sidewalks, paving, curbs, and above and below grade utilities which are to remain.

B. Repair damage caused as result of Work of this Section at no additional cost to Owner.

## PART 2 PRODUCTS

### 2.01 MATERIALS

A. Topsoil: Excavated material, graded free of roots, rocks larger than 2 inches, subsoil, debris, large weeds, and other extraneous or deleterious matter.

B. Subsoil: Excavated material, graded free of lumps larger than 6 inches, rocks larger than 3 inches, and debris.

## PART 3 EXECUTION

### 3.01 PREPARATION

A. Identify and stake lines, levels, contours, known below grade utilities, and datum.

B. Maintain and protect existing utilities remaining which pass through work area.

C. Upon discovery of unknown utility or concealed conditions, immediately discontinue affected work and notify Architect.

D. Begin rough grading work only after completion of site clearing work and the installation of all erosion control facilities.

E. Provide erosion and sedimentary controls where shown on Drawings, and as required by authorities having jurisdiction over the Work.

3.02 TOPSOIL EXCAVATION

A. Excavate topsoil from areas to be further excavated, re-landscaped, re-graded, or designated as a borrow area and stockpile in area designated on site.

B. Do not excavate wet, excessively dry, or frozen topsoil.

C. Stockpile topsoil to depth not exceeding 8 feet.

3.03 SUBSOIL EXCAVATTON

A. Excavate subsoil from areas to be re-landscaped, re-graded, or designated as a borrow area, and stockpile in area designated on site.

B. Do not excavate wet subsoil.

C. Stockpile subsoil to depth not exceeding 8 feet.

3.04 TOLERANCES

A. Top Surface of Subgrade: Plus or minus two inches.

END OF SECTION 31 22 13

# SECTION 31 25 00 - EROSION & SEDIMENT CONTROL

## PART 1 GENERAL

### 1.01 SUMMARY

A. Section Includes:
   1. Soil erosion.
   2. Water pollution control.

B. Related Sections:
   1. Section 31 10 00 - Site Clearing.
   2. Section 31 20 00 – Earth Moving

### 1.02 SUBMITTALS

A. Product Data: Submit manufacturer's data identifying product characteristics and limitations.

### 1.03 REGULATORY REQUIREMENTS

A. Comply with applicable Federal, State, and Local statutes and regulations.

B. In the event of a conflict the more restrictive statutes or regulations shall govern.

C. The Associate will arrange a field pre-construction conference with Contractor and regulatory agencies if required.

### 1.04 ENVIRONMENTAL REQUIREMENTS

A. Coordinate with permanent erosion control features to extent practical to ensure economical effective, and continuous erosion control throughout construction and post construction period.

B. Include temporary control measures as required by statutes, regulations, Associate, and State Inspector to protect fish and wildlife, prevent soil erosion, and comply with other pollution control laws as art of Work of this Section.

### 1.05 SITE CONDITIONS

A. Schedule and perform Work to minimize amounts and times when soil erosion and water pollution could occur.

B. Be responsible for executing the plan as prepared for this project. If the Contractor deviates from this plan without the necessary approvals or the Associate observes any unsatisfactory construction procedures or operations, the Associate may suspend the performance of any construction until satisfactory conditions are corrected.

C. Such suspension shall not be the basis of any claim by Contractor for additional compensation from the Owner nor for an extension of contract time.

## PART 2 PRODUCTS

### 2.01 MATERIALS

A. Silt Fence (Filter Fabric Fence): Design, construct, and maintain in accordance with Local and State Standards and Specifications.

B. Straw Bale: Design, construct, and maintain straw barriers in accordance with Local and State Standards and Specifications.

C. Stakes: Wood, minimum 2 x 2 x 36 inches long.

## PART 3 EXECUTION

### 3.01 GENERAL STATEMENT

A. Proposed plan objectives: Minimize erosion and subsequent sedimentation caused by the construction activities outlined in project scope.

B. Obey following guidelines during construction:
1. Minimize the area and time of exposure.
2. Save existing vegetation, especially trees.
3. Install temporary or permanent measures to control stormwater runoff in order to protect soil bared by construction.
4. Practice proper fine grading and excavation; hold line grading and excavation to a minimum.
5. Establish temporary vegetation until such time that permanent vegetation can be established.
6. Establish permanent vegetation as soon as possible and no later than 10 days after project completion.
7. Lay suitable protection, such as erosion netting, fibermats, etc., over disturbed area when work will cease for a period greater than one day.

### 3.02 STORMWATER HANDLING

A. Divert runoff from areas above the project site away from excavation areas, where possible.

B. Control soil erosion and sedimentation created by stormwater which naturally flows across, over and/or through areas disturbed by construction by use of a sediment basin, straw bale barriers, or silt fences placed along the contour, and in accordance with the temporary erosion control details for disturbed areas perpendicular and parallel to the ground slope, as well as the TEMPORARY EROSION AND SEDIMENTATION CONTROLS portion of this Plan.

C. Divert stormwater runoff from open excavations or trenches. If any trench or excavation dewatering or well point pumping is necessary, direct pump discharges to a dewatering sediment basin, whenever possible.

3.03 TEMPORARY EROSION AND SEDIMENTATION CONTROLS

A. Control soil erosion and sedimentation during initial earthmoving by placing filter fabric fence on low side of the limit of area to be disturbed prior to engaging in any such activities.

B. Use staked straw bale barriers and filter fabric fence to control soil erosion and sedimentation from entering streams during construction activities. Install temporary controls prior to earth disturbance whenever possible.

C. Install temporary erosion controls for excavation as shown on either of the two typical details, Temporary Erosion Control Perpendicular to Slope and Temporary Erosion Control Parallel to Slope, as shown on Drawings, for whichever slope prevails.

D. Be responsible for installing and maintaining temporary erosion controls for disturbed areas on this project in accordance with this report and the Erosion & Sediment Pollution Control Plans & Details provided in Contract Drawings.

E. Where possible, stake straw bale barriers around perimeter of catch basin grates for the purpose of controlling eroded soil and sedimentation from entering the storm sewer inlets.

F. Excavate a four-inch deep anchoring trench as wide as the bales. Place straw bales in the trench and stake. Place straw bales so that the twine holding the bales together is not in contact with the ground. Drive stakes a minimum 18 inches below ground elevation. Backfill and compact anchoring trench to a density equal to or greater than that of undisturbed site soils.

G. Inspect straw bale barriers weekly or after every precipitation event, whichever is more frequent. If bales become ineffective, dislodged, clogged, or inoperative, repair or replace immediately. Remove accumulated sediments when their height reaches 1/3 of the minimum above ground height of straw bale barrier. Immediately repair undercutting or erosion of the anchor toe with compacted backfill materials.

H. Place filter fabric fences on the contour. Extend both ends of a section of fence uphill, 45 degree angles, to the point that the bottom of the fence equals the top of the fence elevation.

I. Excavate a 6 inch deep by 6 inch wide trench continuously along the bottom of fence. Lay bottom 6 inches of filter fabric fence in the trench and backfill with excavated material. Compact backfill material to a density equal to or greater than that of undisturbed soil.

J. Inspect filter fabric fence weekly or after every precipitation event, whichever is more frequent. If filter fabric fence becomes ineffective, immediately repair and replace as necessary. Remove accumulated sediments when their height reaches 1/2 of the above

ground height of the fence. Immediately repair undercutting or erosion of the toe anchor with compacted backfill materials.

K. Leave temporary erosion and sedimentation controls for improved surfaces in place until such time that permanent controls, paving, riprap, etc., are installed. Keep temporary erosion and sedimentation controls for unimproved surfaces in place until such time that a uniform 70 percent vegetative cover is established to stabilize the soil of disturbed area. Once acceptable cover is established, convert sediment basin to permanent detention basin; the details as provided on Drawings and these Specifications.

3.04 EXCAVATION FOR PIPELINES

A. Excavate depth of trench for pipelines such that pipe in its installed position complies with the line and grades shown on Drawings, or with the line and grades established by Owner's Representative in field.

B. In excavation for pipelines where made in open cut and where space permits, excavate trench banks from ground surface to a depth not closer than I foot above the top of the pipe to non-vertical and nonparallel planes.

C. Do not permit trench side walls in pipe zone, defined as that trench area below a point 12 inches above the top of pipe in its installed position, to be other than vertical and parallel planes equidistant from the pipe centerline. Horizontal distance between the vertical planes: be no greater than outside diameter of pipe plus 24 inches nor less than outside diameter of pipe plus 12 inches.

D. Where the available space does not permit and where existing or proposed above ground or underground structures may be endangered, excavate trench sides above the pipe zone to vertical and parallel planes. Horizontal distance between the vertical planes: be no greater than necessary to permit construction of pipeline with required sheeting, shoring, and bracing in place.

3.05 GRADING

A. Before beginning excavation and filling, strip topsoil from areas to be affected to a depth of at least 6 inches and store at a location approved by Associate or Engineer. Excess topsoil shall be disposed of as discussed in the DISPOSAL OF EXCESS MATERIAL portion of these specifications. Place Filter Fabric Fence around low sides topsoil storage areas. Seed and mulch topsoil storage piles in accordance with SEEDING and MULCHING portions of this Plan.

B. Prior to beginning excavation on any areas which currently have impervious surfaces, strip the impervious surface and dispose of it separately at an approved site as discussed in the DISPOSAL OF EXCESS MATERIAL portion of this Plan.

C. After completion of the major construction work, replace topsoil as the upper layer of backfill to a depth of not less than 6 inches so that the final grade will be as required by the Drawings.

D. In general slope grade away from the installed or existing structures to drainage ditches, storm sewer inlets, or culverts. Thoroughly loosen those areas which are not occupied by

structures or pavement by harrowing or discing and then rake by hand. Remove stones over 1&1/2 inches, rubbish, and debris. Uniformly space topsoil in piles and distribute by an approved method.

E. Supply additional topsoil required over and above that salvaged from site in order to maintain a minimum of 6 inch depth over entire area defined above, if the area is to be seeded. Correct any surface irregularities to prevent formation of low places where surface water may pool. Do not place topsoil when the subgrade is frozen or when it is excessively wet or dry; do not handled when in a frozen or muddy condition.

3.06 VEGETATION

A. Permanently seed, or if specified, sod grounds disturbed by operations necessary to complete the work for this project, unless occupied by structures or paved. Accomplished as soon as possible after construction and not later than 10 days.

B. If seeding cannot be completed within the 10 day period due to weather conditions, mulch disturbed area with straw at rate of two bales per 1,000 sq. ft. Anchor straw with mulch netting according to manufacturer's recommendations or other appropriate means.

C. Use temporary seeding to protect exposed land surfaces which will not be permanently protected for a period more than 10 days. Temporary vegetation will provide short-term rapid cover until permanent vegetation or other protection can be established.

3.07 TEMPORARY SEEDING

A. Purpose of temporary cover: to provide short-term, rapid cover for control of runoff and erosion until permanent vegetation or other stabilization material can be established. Apply temporary cover on sediment producing areas where the period of exposure will be more than 10 days. Provide mulch cover for no less than two months' exposure.

B. The site preparation and establishment of temporary cover shall be conducted according to the following guidelines:
   1. Install needed surface water control measures.
   2. Perform all cultural operations at right angles to the slope.
   3 . Apply ground limestone according to test or at the rate of 100 lb./1000 sq. yd.
   4. Apply uniformly recommended analysis fertilizer according to soil test or 10-10-10 at the rate of 10 lb./1000 sq. yd.
   5. Work in lime and fertilizer to a depth of 4 inches using any suitable equipment.
   6. Temporary cover seed mixture: consist of 100 percent annual ryegrass; apply seed uniformly at rate of 10 lb./1000 sq.yd.
   7. Cover grass seed with 1/2 inches of soil with suitable equipment.

C. Establish temporary grass cover in the following areas:
   1 . Seed stockpiles where soil stockpiles are to be exposed for a period greater than 20 days. When the soil stockpile will be exposed for a period greater than two (2) days, but less than twenty (20) days, cover stockpile with mulch or protective erosion control fabric.
   2. Where waterways or ditches will be used to divert stormwater entering the work area, seed those waterways along the bottom, sides and 3 feet above and below the waterway. After construction is completed, seed or sod permanent waterways or

ditches according to this Plan. Restore temporary waterways or ditches restored to natural grade and permanently seed according to this Plan.

3 . Install waterways or ditches on slopes above the work area as required.

4. Where disturbed land surfaces will not be permanently protected for a period of more than ten (10) days.

## 3.08 PERMANENT GRASS COVER

A. Permanent Materials:

1. Topsoil: be acceptable friable loam; reasonably free of subsoil, clay lumps, brush, roots, weeds, and objectionable organic material stones, other inorganic material larger than two inches in any dimension, litter, and other materials harmful to plant growth.
2. Lime: be pulverized agricultural limestone containing a minimum of 85 percent total carbonates, ground so that at least 90 percent passes a No. 20 sieve and at least 50 percent passes a No. 100 sieve.
3. Commercial fertilizer: be a dry formulation of 10-20-20 analysis delivered in bags showing weight analysis and manufacturer's name; conform to the standards of the Association of Official Agricultural Chemists.
4. Slow-release Nitrogen Fertilizer: conform to Publication of 408, Section 804.2 (a) 3.
5. Clean and fresh grass seed: be premixed packed in sealed bags with inspection tag showing net weight, composition of mix, date of germination tests and supplier's name.
6. Grass seed formula: in accordance with ODOT Construction and Material Specifications.
7. Mulch: in accordance with ODOT Construction and Material Specifications.

B. Application:

1. Topsoil:
   a. Apply topsoil to all areas to be turfed except slopes 2:1 or greater.
   b. Prepare areas to receive topsoil by loosening soil to a depth of two inches. Remove stone and other foreign material two inches or larger.
   c. Spread and compact to a uniform six inch depth. Compact with a roller, weighing not over 120 lbs. per foot or roller, or by other acceptable methods.
   d. Excess topsoil if any, becomes property of Owner; stockpile and stabilize as directed by Associate.
2. Lime and Fertilizer:
   a. Apply pulverized agricultural limestone at a rate of 800 lbs. per 1000 S.Y.
   b. Apply 10-20-20 analysis commercial fertilizer at a rate of 140 lbs. per 1000 S.Y.
   c. Work lime and fertilizer into soil to two inch minimum depth by raking, discing, or harrowing.
3. Seeding:
   a. Apply in accordance with ODOT Construction and Material Specifications.
4. Mulching:
   a. Apply mulch within 48 hours after seeding in accordance with ODOT Construction and Material Specifications.

C. Maintenance: Reseed areas and spots damaged or gullied or otherwise not showing a catch of grass. Repeat until a complete coverage is obtained. Keep seeded areas moist until 70 percent catch of grass is established. Mow areas where weeds are smothering new grass seedlings.

3.09 PROTECTION OF STREAM BANKS

A. Clean and grub right-of-way according to above procedures.

B. Earthmoving vehicles: Do not discharge any petroleum product or accumulated sediment to the stream.

C. Store excavated soil on side of trench farthest from stream.

D. If a pipe trench or excavation is dewatered during construction, remove water from pipe trench or keep excavation free of suspended sediment prior to entering any established drainage way. To remove suspended sediment, pump water into sediment basin as discussed in the DEWATERING portion of this Plan.

E. Construction activities within surface water conveyance channels: require utilization of erosion control measures to protect stream banks and stream bed.

3.10 RESTORATION OF DRAINAGE CHANNELS, AND OTHER UNIMPROVED AREAS DISTURBED DURING CONSTRUCTION

A. Hydromulch, fertilizer and seed unimproved areas disturbed during construction, including all drainage channels, as soon after completion of backhoe operations as is practicable; establish a growth, and minimize pollution of streams from erodible fill, backfill, and other materials.

B. Employ a satisfactory method of sowing using hydraulic seeders and other approved equipment where applicable.

C. Drainage channel seeding mixture: consist of 45 percent winter rye, 45 percent tall fescue, and 10 percent perennial ryegrass, or an equivalent ryegrass base formula suitable for drainage channels. Apply drainage channel seed at rate of 3-5 lb./1000 sq. yd. Do seeding only at such times as climatic condition, temperature, and moisture are suitable for growth.

D. Stabilize channels which cannot be stabilized with vegetation with jute matting or specifically designed products approved by Associate.

3.11 DISPOSAL OF EXCESS MATERIAL

A. Disposal of excess material resulting from project construction.

B. Excess material includes but may not be limited to: material resulting from excess material resulting from imbalance of cuts and fills; that material within the pipe zone; material deemed by Associate to be unsuitable for use as backfill material; excavated

pavement material; excess material resulting from use of select backfill i.e. beneath improved surfaces; and excavated areas being replaced with a rock riprap lining.

C. Secure an approved on-site waste area for disposal of these materials. If sufficient area is not available on-site, the contractor shall secure an approved off-site waste area for disposal of the excess materials.

3.12 FINAL GRADING

A. *Areas Disturbed by Contractor's Operation.* Bring areas, including those areas used for storage of excavated material, equipment, etc., up to within 6 inches of final grade indicated on Drawings by methods specified. Where not indicated on Drawings, establish final grade equivalent to existing grade unless otherwise specified in field by Owner's Representative. In general slope grade away from the installed or existing structures to drainage ditches, storm sewer inlets or culverts. Thoroughly loosen those areas which are not occupied by structures or pavement by harrowing or discing and then rake by hand. Remove stones over 1 1/2 inches, rubbish, or debris. Uniformly space topsoil spaced in piles and distribute by an approved method.

B. *Additional Topsoil Required.* Provide additional topsoil required over and above that salvaged from the site in order to maintain a minimum of 6 inches of depth over the entire area defined above if the area is to be seeded, or 4 inches of depth if the area is to be sodded or planted. Correct surface irregularities to prevent formation of low places where surface water may pool. Do not place topsoil when the subgrade is frozen or when it is excessively wet or dry; do not handle when in frozen or muddy condition.

3.13 CONTRACTOR'S ASSEMBLY/STOCK YARD

A. Be responsible for securing and maintaining an assembly/stock yard for storing equipment and materials for use on this project. Provide such secured areas with their own erosion and sedimentation control plans submitted to Ohio Environmental Protection Agency for review and approval if necessary.

B. Be responsible for obtaining necessary approvals and permits required for such areas. Utilize and maintain such areas in accordance with laws, rules, and regulations of agencies having jurisdiction over the same.

3.14 IMPLEMENTATION OF THE PLAN

A. The foregoing procedures and requirements of these Specifications are contractual obligations of Contractor performing actual construction work. Said requirements also apply to subcontractors working on the project.

B. At such time, review in detail the final standards and specifications concerning seeding mixtures, cover requirements, barrier and sediment basin location, and any other such items as may be required to complete the Contract work in accordance with the rules and regulations of that agency, and in accordance with the laws, rules, and regulations of other authorities having jurisdiction over the required construction work.

C. The requirements relative to temporary control measures, early permanent restoration, minimizing work areas, are of the most important factors affecting

construction performance. In view of those circumstances, it is believed that this particular plan, on this particular project, will be implemented throughout the course of work.

3.15 USE OF THIS PLAN

A. As previously stated herein, this Stormwater Pollution Prevention Plan has been prepared in response to and in accordance with certain rules and regulations promulgated by Ohio Environmental Protection Agency.

B. The handling of stormwater, the topographic features described, the staging of earthworm, the temporary and permanent control measures, and the interpretations and opinions stated in the foregoing pages are to be used only for the purpose of eliminating, minimizing and/or controlling pollution of the streams and waterways from materials anticipated to be eroded from the earthworm to be disturbed as a result of construction of the Contract.

3.16 GENERAL NOTES

A. Make periodic inspections to determine if proper vegetative growth is taking place. Reseed and mulch areas as needed.

B. Remove and restore rock construction entrances when access provided by the entrance is no longer necessary.

C. Store topsoil along side the trench in a separate pile from other excavated material. Store no material within two feet of trench excavation.

END OF SECTION – 31 25 00

# SECTION 32 12 16 - ASPHALT PAVING

## PART 1 GENERAL

### 1.01 SUMMARY

A. Section Includes:
1. Asphaltic concrete paving system.

B. Related Sections:
1. Section 31 20 00 – Earth Moving
2. Section 32 17 23 - Pavement Marking

### 1.02 REFERENCES

A. Construction and Material Specifications, Ohio Department of Transportation.

B. ASTM D995 - Mixing Plants for Hot-Mixed, Hot-Laid Bituminous Paving Mixtures.

### 1.03 SYSTEM PERFORMANCE

A. Paving: Designed for circulation of automobiles, maintenance vehicles and delivery trucks.

B. Refer to Drawings for thickness of various materials.

### 1.04 SUBMITTALS

A. Submit proposed design mix for each class of mix to Architect for review prior to commencement of work.

### 1.05 ENVIRONMENTAL REQUIREMENTS

A. Quality Assurance - Manufacturer:
1. Conform with ASTM D995.

B. Quality Assurance - Installation:
1. Do not place asphalt when base surface temperature is less than 40 degrees F.

2. Do not place asphalt when base surface is wet or contains an excess of moisture which would prevent uniform distribution and required penetration.

## PART 2 PRODUCTS

### 2.01 MATERIALS

A. Asphalt Concrete Surface Course Type I: In accordance with Section 448 Surface Course, of ODOT Construction and Material Specifications.

B. Asphalt Concrete Intermediate Course Type II: In accordance with Section 448 Intermediate Course of ODOT Construction and Material Specifications.

C. Bituminous Aggregate Base: In accordance with Section 301 of ODOT Construction and Material Specifications.

D. Prime Coat: In accordance with Section 408 of ODOT Construction and Material Specifications.

E. Aggregate Base: In accordance with Section 304 of ODOT Construction and Material Specifications.

2.02 MIXING

A. Maintain thorough and uniform mixture for each class of mix.

B. Bring asphalt cement and mineral constituents to required temperature prior to mixing. Ensure aggregates are sufficiently dry so as to prevent foaming in mixture.

C. Combine materials conforming to ASTM D995 and ODOT Construction and Material Specifications.

PART 3 EXECUTION

3.01 EXAMINATION

A. Verify compacted subgrade is dry and ready to support paving and imposed loads and is at proper gradients and elevations.

B. Verify that frames of subsurface structures are properly set to meet final payment elevation.

3.02 PREPARATION

A. Apply Bituminous Prime Coat in accordance with manufacturer's instructions to contact surfaces of curbs and subsurface structure frames.

B. Abutting Existing Pavement: Where new paving abuts existing pavement saw cut existing pavement to its final depth to form straight lines or smooth curved lines to expose vertical face.

C. Apply Bituminous Tack Coat to vertical face of existing pavement which interfaces new paving materials.

D. Use fine aggregate to blot excess primer and tack coat materials.

3.03 PLACING SUBBASE

A. Place aggregate material to compacted depth indicated.

B. Spread, shape, and compact all aggregate material deposited on the subgrade during the same day.

C. Extend subbase course minimum 8 inches beyond asphalt pavement width unless otherwise shown on Drawings.

D. Add water during compaction to bring subbase course materials to approximate optimum moisture content, if necessary.

E. Roll and thoroughly compact aggregate material with an approved roller.

F. Properly compact areas adjacent to curbs, catch basins, manholes and other areas not accessible to rollers with mechanical or hand tamping devices.

G. Using crown template, where required, of length and cut to required crown of finished surface of subbase, check the contour thereof at intervals of not more than 25 feet.

H. Approved straightedges 10 ft. in length shall also be furnished and used for testing longitudinal irregularities in the surface of the subbase course.

3.04 TRANSPORTATION OF MATERIALS

A. Transport asphalt concrete mixtures from mixing plant in trucks having tight and clean compartments.

B. Provide covers over hot mixes when transporting to protect from weather and to prevent heat loss.

C. During cold weather or for long-distance deliveries, provide insulation around truck bed surfaces.

3.05 PLACING ASPHALT PAVEMENT

A. Place asphalt pavement within 24 hours of priming specified surfaces and in accordance with Sections 301, 448. If more than 24 hours elapses between placement of intermediate and surface courses, Item 407 Tack Coat shall be applied at a rate of 0.10 gallons per square yard.

B. Place each course to compacted thickness identified on Drawings.

C. Place surface course within two hours of placing and compacting intermediate course.

D. Ensure asphalt is minimum $245^0$ F. immediately after placing and PRIOR to initial rolling.

E. Initiate compaction as soon as pavement will bear equipment without checking or undue displacement.

F. Compact pavement by rolling in accordance with ODOT Construction and Material Specifications. Do not displace or extrude pavement from position. Carry out compaction in three operations:

1. Breakdown Rolling.
2. Second Rolling.
3. Finish Rolling.

G. Develop rolling with consecutive passes to achieve even and smooth finish, without roller marks. Keep roller wheels sufficiently moist so as not to pick up material.

H. Perform hand tamping in areas not accessible to rolling equipment. Remove areas that are loose, broken, mixed with dirt, or otherwise defective, or show deficiency of bituminous material. Replace with fresh hot mixture and compact to conform to adjacent area.

I. Line painting and marking is provided under provisions of Section 32 17 23.

3.06 TOLERANCES

A. Flatness: Maximum variation of 1/4 inch measured with 20 foot straight edge.

B. Compacted Scheduled Thickness: Within 1/8 inch of design thickness.

C. Variation from True Elevation:
1. Intermediate Course: 1/2 inch in 10 feet.
2. Surface Course: 1/4 inch in 10 feet.

D. Depressions, retaining or ponding water, mounds in pavement, and ridges at joints will be cause for rejection.

3.07 FIELD QUALITY CONTROL

A. Perform field testing under provisions of Section 01 40 00.

B. Test compacted thickness of base, intermediate and surface course during each day of asphalt placement in compliance with ODOT Construction and Material Specifications.

C. If compacted thickness is less than specified tolerances, then provide additional material and roll into hot bituminous paving course. If bituminous paving course falls below specified temperature, then entire bituminous course shall be removed and new materials provided at no additional cost to Owner.

3.08 CLEANING

A. After completion of paving operations, clean surfaces of excess and spilled asphalt materials-to satisfaction of Architect.

3.09 PROTECTION

A. Immediately after placement, protect pavement from mechanical injury for 3 days, or until properly cooled and resistant to wheel damage.

B. Provide barricades and warning devices as required to protect pavement and general public.

C. Cover openings of structures in area of paving until permanent coverings are placed.

END OF SECTION 32 12 16

# SECTION 32 13 13 - CONCRETE PAVING

## PART 1 GENERAL

### 1.01 SUMMARY

A. Section Includes:
1. Concrete sidewalks, curbs and paving.
2. Reinforcement.
3. Surface finish.
4. Curing and Sealing.

B. Related Sections:
1. Section 31 20 00 – Earth Moving.
2. Section 03 00 00 - Concrete.

### 1.02 REFERENCES

A. American Concrete Institute (ACI):
1. ACI 301 - Specifications for Structural Concrete for Buildings.
2. ACI 305 - Recommended Practice for Hot Weather Concreting.
3. ACI 306- Recommended Practice for Winter Concrete.
4. ACI 308 - Standard Practice for Curing Concrete.
5. ACI 347 - Recommended Practice for Concrete Formwork.

B. American Society for Testing and Materials (ASTM):
1. ASTM C94 - Ready Mixed Concrete.
2. ASTM C260 - Air-Entraining Admixtures for Concrete.
3 . ASTM C309 - Liquid Membrane-Forming Compounds for Curing Concrete.
4. ASTM D994 - Preformed Expansion Joint Filler for Concrete.

### 1.03 SUBMITTALS

A. Submit mix design and obtain approval PRIOR to commencement of concrete work.

B. Submit original ready mixed concrete delivery tickets; include air content and admixture if included.

### 1.04 QUALITY ASSURANCE

A. Perform work in accordance with ACI references.

B. Obtain materials from same source where possible.

C. Comply with applicable building code requirements.

D. Maintain log of concrete pours with date, air temperature, time of placement and locations identified.

1.05 ENVIRONMENTAL REQUIREMENTS

A. Mix, transport, place, and protect concrete within temperature ranges and environmental conditions for optimum concrete installation according to referenced standards.

1. Cold Weather: Maintain protection against freezing for 72 hours.
2. Hot Weather: PREVENT rapid drying; maximum concrete temperature of $90^0$ F.

B. Do not place concrete during rain, sleet, or snow unless protection is provided.

1.06 TESTS

A. Testing and analysis will be performed under provisions of Section 01400 by Contractor.

B. Three concrete test cylinders will be taken for every 50 or less cu. yds. of concrete placed each day.

C. One additional test cylinder will be taken during cold weather and be cured on site under same conditions as concrete it represents.

D. One slump test will be taken for each set of test cylinders taken.

PART 2 PRODUCTS

2.01 FORM MATERIALS

A. Conform to ACI 301 and 347.

2.02 REINFORCEMENT

A. Use reinforcement and accessory materials specified under provisions of Section 03 30 00 – Cast-in-place Concrete.

2.03 CONCRETE MATERIALS

A. Use concrete materials specified under provisions of Section 03 30 00 – Cast-in-place Concrete.

B. Cement: Manufacturer's standard gray colors.

C. Sand: Regular sand color.

2.04 ADMIXTURES

A. Air Entrainment: ASTM C260.

2.05 ACCESSORIES

A. Joint Filler: ASTM D994 bituminous impregnated fiberboard; 1/2 inch thick or as detailed on Drawings.

B. Curing and Sealing Compound: ASTM C309, Type 1 water-based liquid membrane forming compound with approximately 30 percent solids content.
   1. Design Guide: MasterKure 200W by Master Builders, Inc.
   2. Approved Equal: Similar product manufactured by Euclid Chemical Co., Symon Corp., Vexcon Chemicals, or approved equal.

C. Form Release Agent: Colorless material which win not stain concrete, absorb moisture, or impair natural bonding or color characteristics of coating intended for use on concrete.

2.06 CONCRETE MIX

A. Mix concrete in accordance with ASTM C94 and in quantities for immediate use.

B. Provide concrete with the following characteristics:
   1. Compressive strength at 28 days: 4000 psi.
   2. Slump Range: 4" +- 1/2".
   3. Air Content: 5 - 7%; varying proportional to aggregate size and for severe exposure.

C. Add air entraining agent to concrete mix for concrete work required by this Section.

D. Use other admixtures only when approved by Architect.

PART 3 EXECUTION

3.01 EXAMINATION

A. Verify compacted subgrade, granular base, stabilized soil is ready to support paving and imposed loads.

B. Verify gradients and elevations of base are correct.

C. Beginning of installation means acceptance of existing conditions.

3.02 PREPARATION

A. Moisten base to minimize absorption of water from fresh concrete.

B. Notify Architect minimum 24 hours prior to commencement of concreting operations.

C. Prior to placing concrete ensure the following:
   1. Freestanding water, snow, ice, and foreign materials are removed.
   2. Subgrade is moist at time of concreting.
   3 . Forms are thoroughly cleaned, secured in position, and coated with form release agent.

3.03 FORMING

A. Place and secure forms to correct location, dimension, and profile; comply with ACI 347.

B. Assemble formwork to permit easy stripping and dismantling without damaging concrete.

C. Place joint fillers vertical in position, in straight lines. Secure to formwork during concrete placement.

D. Radii and curve forms shall extend two feet beyond the point of curvature.

E. Set top of form at finished elevation of concrete work.

F. Align form joints.

G. Do not apply form release agent where concrete surfaces receive special finishes or applied coatings which may be affected by agent.

H. Coordinate work of other Sections in forming and setting openings, slots, recesses, chases, sleeves, bolts, anchors, and other inserts.

3.04 REINFORCEMENT

A. Place reinforcement at mid-height of slabs-on-grade using materials in longest practical lengths; adequately support and secure against displacement.

B. Lap and splice bars minimum 30 times diameter; lap wire fabric 1 full mesh aluminum; tie splices with wire. Offset end laps in adjacent widths of wire fabric to prevent continuous laps.

C. Interrupt reinforcement at control contraction, and expansion joints.

D. Place reinforcement to achieve slab and curb alignment as detailed.

E. Provide dowel joints at interruptions of concrete with one end of dowel set in capped sleeve to allow longitudinal movement.

F. Detail fabricate and place reinforcement in accordance with ACI SP-66.

3.05 FORMED JOINTS

A. Expansion Joints (Isolation Joints): Place at 20 foot intervals for sidewalks and for curbs to correct elevation and profile unless shown otherwise, aligning curb, gutter and sidewalk joints; and where concrete abuts permanent objects within paved area.
   1. Place joint filler between paving components and building or other appurtenances. Set top of joint filler equal to adjacent concrete surfaces.

B. Control Joints (Contraction Joints): Provide scored or sawn construction joints at 5 foot intervals of sidewalk curbs and between sidewalks and curbs unless shown otherwise. Provide joint depth at least 1/5 concrete thickness.

1. Tooled Joints: Form joints in fresh concrete by hand grooving using appropriate tools while concrete is plastic.
2. Sawed Joints: Form joints using power saw equipped with shatterproof or diamond rimmed blades to create a clean cut.

C. Construction Joints: Provide at end of concrete placements, and at locations where placement operations are stopped for more than 1/2 hour, except where placements terminate at control joints. Construct with dowels as shown on Drawings.

D. Provide joints conforming to ACI 381.

3.06 PLACING CONCRETE

A. Place concrete in accordance with ACI 301.
1. Hot Weather Placement: ACI 305.
2. Cold Weather Placement: ACI 306.

B. Ensure reinforcement, inserts, embedded parts, and formed joints are not disturbed during concrete placement.

C. Place concrete continuously between predetermined construction joints. Do not break or interrupt successive pours such that cold joints occur.

D. Plan concrete to pattern indicated.

E. Deposit in place ready mixed concrete hauled in truck mixers within 90 minutes from time water is added to the mix.

F. Pitch concrete paving to drains or perimeter areas for positive drainage.

G. Complete all joints before uncontrolled shrinkage cracking occurs.

H. Round all edges including joints with 1/4 inch radius edging tool.

I. Provide openings for inserts, sleeves, and other items required by various contractors and subcontractors.

3.07 FINISHING

A. Driveways and Sidewalk Paving: Light broom, perpendicular to path of travel with a new broom.

B. Remove high or low areas after concrete has been struck off and consolidated. Minimize use of bullfloat.

C. Ensure finished surfaces do not vary from true lines, levels, or grade by more than 1/4 inch in 10 feet when measured with straightedge.

3.08 CURING

A. Protect concrete against frost and rapid drying and keep moist for at least 6 days after placing; during this period, concrete shall be maintained above 70 degrees F for at least 3 days or above 50 degrees F for at least 5 days.

B. Apply curing and sealing compound at a rate and at appropriate time as recommended by curing compound manufacturer.

C. Apply curing and sealing compound to exposed concrete sidewalks, paving and, paving surfaces after completing concrete finishing.

3.09 FIELD QUALITY CONTROL

A. Perform field inspection and testing under provisions of Section 01400.

B. Maintain records of placed concrete items. Record date, location of pour, quantity, air temperature and test samples taken.

3.10 PROTECTION

A. Protect installed Work under provisions of Section 01500.

B. Immediately after placement, protect concrete from premature drying, excessive hot or cold temperatures, and mechanical injury, including vandalism.

C. Repair or replace broken, defective or vandalized concrete without additional cost to Owner. Vandalism includes writing, graffiti and items thrown on exposed concrete surfaces.

END OF SECTION 32 13 13

# SECTION 32 17 23 - PAVEMENT MARKING

## PART 1 GENERAL

### 1.01 SUMMARY

A. Sections Includes: Pavement marking and stripping.
B. Related Sections:
1. Section 32 12 16 - Asphaltic Paving.
2. Section 32 13 13 - Concrete Paving.
3. Section 09 91 00 - Painting.

### 1.02 REFERENCES

A. ADA - American Disabilities Act.

B. ANSI A117.1 - Providing Accessibility and Usability for Physically Handicapped People.

### 1.03 SUBMITTALS

A. Submit under provisions of Section 01 33 00.

B. Product Data: Submit manufacturer's data, descriptive literature, and specifications.

### 1.04 QUALITY ASSURANCE

A. Regulatory Requirements: Comply with applicable codes and regulations of agencies having jurisdiction, including those having jurisdiction over airborne emissions and industrial waste disposal.

B. Environmental Requirements: Do not apply marking paint when weather is foggy or rainy, nor when ambient or pavement temperatures are below 40 degrees F, nor when such conditions are anticipated during the 8 hours following application.

C. Comply with manufacturer’s recommendations.

## PART 2 PRODUCTS

### 2.01 MANUFACTURERS

A. Acceptable Manufacturers:
1. Benjamin Moore and Co.
2. PPG Industries.
    a. Referenced as Design Guide.

3. Pratt and Lambert, Inc.
4. Sherwin-Williams Co.

5. Tnemec Co., Inc.

2.02 MATERIALS

A. Traffic Marking Paint: Flat alkyd resins specifically formulated for application to exterior asphalt and concrete surfaces.

B. Accessory Materials: Paint cleaners and other materials not specifically indicated but required to achieve finishes of commercial quality.

2.03 EQUIPMENT

A. Use pressurized, self-contained paint machine capable of applying a straight line without overspray from 3 inches to 4 inches wide, with uniform coverage.

2.04 MIXING

A. Comply with manufacturer's recommendations.

PART 3 EXECUTION

3.01 EXAMINATION

A. Verify that paving substrates are fully cured and that conditions are correct for proper application.

3.02 PREPARATION

A. Prepare, apply, cleanup, and protect materials with requirements specified by manufacturer.

B. Protection: Protect previously installed Work and adjacent materials; take precautions necessary to avoid and mitigate the effects of wind drift in application of liquid marking materials.

C. Surface Preparation: Locate markings as shown on Drawings; layout markings using guide lines, templates, and forms. Thoroughly clean surfaces free of dirt, sand, gravel oil and other foreign materials with power broom supplemented by hand brooms.

3.03 APPLICATION

A. Apply marking paint as recommended by paint manufacturer.

B. Apply paint with mechanical equipment:
1. Provide uniform line width of 4 inches, unless otherwise noted on Drawings.
2. Provide hatching in handicapped parking areas as required by handicapped regulations.
3. Use single line striping between parking stalls, or as indicated on the Drawings.

C. Symbol of Accessibility: Apply international handicapped symbol on pavement surface in accordance with ANSI A117.1.
1 . On asphalt surfaces, paint blue symbol on white background square.
2. On concrete surfaces, paint white symbol on blue background square.
3 . Provide symbol in size indicated on Drawings, or as required by Code.

D. Apply paint in dry film thickness of 2.25 mils per coat for various substrates as follows:

1. Asphalt: 2 coats.
2. Concrete: 1 coat.

3.04 SCHEDULE

A. Use colors as identified in this Article and as indicated on Drawings:
1. Text and directional arrows: White.
2. Parking dividers: White.
3 . Handicapped zone markings: Blue.

B. Blue paint for the symbol of accessibility shall match color of Federal Standard.

END OF SECTION 32 17 23

# SECTION 32 91 19 - LANDSCAPE GRADING

## PART 1 GENERAL

### 1.01 SUMMARY

A. Section Includes:
1. Preparation of lawn areas for seeding.
2. Fine grading including topsoil to achieve a smooth transition with uniform grades.

B. Related Sections:
1. Section 31 22 13 - Rough Grading.
2. Section 32 92 19 - Seeding.

### 1.02 SUBMITTALS

A. Submit under provisions of Division 1.

B. Submit certification that materials provided conform to specified materials.

### 1.03 DELIVERY, STORAGE, AND HANDLING

A. Protect topsoil to prevent contamination from subsoil clay, stones, leaves, branches, garbage and other debris.

## PART 2 PRODUCTS

### 2.01 MATERIALS

A. Topsoil:
1. Acidity: Range from ph 5.9 to 6.9, containing not less than 3 percent decaying organic matter as determined by loss of ignition of moisture free samples dried at 100 degrees C.
2. Make-Up: Natural clean, fertile, friable loam or clay loam without admixtures of subsoil clay or slag. Top soil shall be free from stones, lumps, roots, leaves, branches, twigs, garbage, weeds or weed seed and other debris.
3. Source: Secure from off site sources.

B. Equipment: As required to perform the Work of this Section.

## PART 3 EXECUTTON

### 3.01 APPLICATION

A. Verify that rough grading and subgrade preparation under provisions of Sections 31 22 13 and 31 20 00 are properly located and at correct elevation.

B. Do not initiate work of this Section until defective rough grading work and elevations are corrected.

3.02 PREPARATION

A. Ascertain locations of utilities and subsurface drainage so that proper precautions may be taken so as not to disturb or damage subsurface existing conditions and improvements.

B. Make necessary repairs to subsurface existing conditions and improvements damaged by Work of this Section without additional cost to Owner.

C. Protect building materials and landscaping prior to initiation of Work of this Section.

3.03 APPLICATION

A. Grade as necessary to bring the subgrade to a true, smooth slope parallel to 6 inches below finished grade for areas which are to be seeded; slopes to receive 2 inches of topsoil.

B. Remove rock and other debris 3 inches or greater in any dimension. Scarify- the subgrade immediately before covering with topsoil.

C. Spread topsoil over areas to receive seed to a depth sufficiently greater than 6 inches that after natural settlement and light rolling the complete work will be smooth and conform to intended grades.

3.04 CLEANING

A. Clean building materials, sidewalks, drives, and other surfaces which become dirty as a result of this Section.

END OF SECTION 32 91 19

# SECTION 32 92 19 - SEEDING

## PART 1 GENERAL

### 1.01 SUMMARY

A. Work Includes:
1. Seeding grass.
2. Soil amendments.
3. Repair of damaged grass areas.

B. Related Sections:
1. Section 32 91 19 – Landscape Grading.

### 1.02 QUALITY ASSURANCE

A. Mix seed by certified dealer with tag bearing dealer's guaranteed statement of composition and percentages of purity and germination of each variety attached to each seed bag or container upon arrival at site.

B. Reject each seed bag without dealer's tag.

### 1.03 SUBMITTALS

A. Submit under provisions of Section 01300.

B. Submit tags accompanying seed bearing statement of composition and percentages of purity and germination.

C. Manufacturer’s guaranteed statement of fertilizer analysis and warranty, or manufacturer’s certificate of compliance covering analysis.

### 1.04 TIME OF PLANTING

A. Spring: Between March 15 and June 15.

B. Fall: Between September 1 and October 15.

C. Exceptions: May be granted in writing by Architect upon receipt of written request by Contractor.

### 1.05 LIMITATIONS

A. Seeding shall not take place, even during specified times, when weather conditions would negate germination or damage sprouting seed, or on days with wind speed greater than 10 mph.

### 1.06 DELIVERY, STORAGE, AND HANDLING

A. Deliver lime, fertilizer, and seed in original unopened containers or bags. Give 2 days notice so unopened materials may be met and checked.

B. Store materials where directed by Owner's Representative.

C. Protect materials to prevent contamination from subsoil clay, stones, leaves, branches, garbage, and other debris.

D. Delivery: Deliver to site in original unopened containers. Fertilizer shall not have been exposed to rain or wet conditions prior to delivery and shall be protected while stored on site. Do not store fertilizer in direct contact with ground.

PART 2 PRODUCTS

2.01 FERTILIZER AND LIME

A. Standard commercial fertilizer complying to applicable Federal and State laws and in accordance with Section 659.08 of ODOT Construction and Material Specifications.

B. Certification, Warranty: Provide certification and warranty bearing manufacturer's guaranteed analysis at time of delivery to site. Label shall also state make-up of nitrogen and probable (expected) life of controlled-release nitrogen nutrients; or Manufacturer or Contractor shall warrant life of nitrogen nutrients in writing.

2.02 MULCH

A. Wheat straw or oats straw: Free from mature seed-bearing stalks and roots of non-specified grasses or weeds.

B. Wood cellulose fiber: Having no growth or germination inhibiting factors, and an equilibrium air dry moisture content at time of manufacture of 12 percent. The wood cellulose fiber shall disperse rapidly in water to form a homogeneous slurry and remain in same state when agitated in hydraulic mulching unit. Acceptable manufacturer is Weyerhaeuser Company, or approved equal.

C. Mushroom Manure: Finely shredded, free of lumps, and dry when mixed. Mushroom manure shall be composed of well-rotted stable manure used within 9 months or application for commercial growing of at least one crop of mushrooms. Admixtures to manure shall have been added prior to its use for growing mushrooms. Be free of refuse, garbage, and harmful chemicals. Mushroom manure shall be broken up and finely shredded in readiness for application.

2.04 ACCESSORY MATERIALS

A. Inoculant: Commercial product for treating leguminous seed consisting of suitable carrier containing a culture of nitrogen-fixing bacteria for seed to be inoculated. Do not use inoculant later than date indicated on container.

B. Weed Killer: Systemic type; Round-up by Monsanto Co., or approved equal.

C. Water: Potable.

D. Equipment: Hand tools, hoses, machinery and equipment normal to trade. Do not use roller weighing more than 100 pounds per foot of width.

2.05 SEED MIXTURES

A. Grass Seed Name: Scotts Sports Turf or equal, comprised of following mixture:

| Grass Seed | Proportion | Germination |
|---|---|---|
| Loretta Perennial Rye | 30 | 90% |
| Pennant Perennial Rye | 30 | 90% |
| Victa Kentucky Bluegrass | 20 | 87% |
| Abbey Kentucky Bluegrass | 20 | 87% |

PART 3 EXECUTION

3.01 TOPSOIL PREPARATION

A. Spreading: Harrow and hand rake as necessary to spread topsoil. Topsoil surface shall be true lines and gradients, free from unsightly variations, humps, ridges and depressions.

B. Cleaning: Remove stones over 2 inches in any dimension, and stiff clods of topsoil along with items disallowed by topsoil material specification.

C. Rolling: Use lawn roller to settle topsoil and establish firm surface; fill in low spots.

3.02 GRASS SEEDING

A. Fertilizer: Apply standard commercial fertilizer per ODOT 659.04 and work same into upper 1 inch of topsoil by hand rake or other approved method.

B. Seed Application: Rate: 4.5 pounds/1,000 sq.ft.

C. Sow grass seed mixture in two equal quantities, sowing one quantity in one direction and the second quantity at right angles to the first with mechanical spreader.

D. Rake to cover seed no deeper than 1/4 inch. Lightly roll and mulch.

3.04 MULCH

A. Rate for grass seed areas:
   1 . Wheat or Oats Straw - 100 lbs./1000 sq.ft.
   2. Wood Cellulose Mulch - 30 lbs./1000 sq.ft.

B. Stabilization: Ensure mulch is stabilized until grass is established. Cleanup mulch which has been wind blown or otherwise destabilized by contractor within 2 days. After 2 days, Owner will have cleanup done by others and same shall be a legitimate deduction from amount owed contractor.

3.05 REPAIR DAMAGED GRASS AREAS

A. Repair all damaged existing grass areas due to construction activities.
   1. Bring disturbed areas to smooth finished grade matching adjacent contours.
   2. Add new topsoil to existing to bring to a 6 inch depth.
   3. Sow with specified seed mixture.
   4. Provide same maintenance and guarantee as new grass areas throughout plan.

3.06 CLEAN UP

A. Remove all topsoil fertilizer, lime, and other debris from all paved areas.

3.07 MAINTENANCE AND GUARANTEE

A. Contractor shall re-visit the site between September 1 and October 15 to inspect the site and reseed and/or repair any areas as needed.

END OF SECTION 32 92 19

# SECTION 33 10 00 - WATER UTILITIES

## PART 1 - GENERAL

### 1.1 RELATED DOCUMENTS

A. Drawings and general provisions of the Contract, including General and Supplementary Conditions and Division 1 Specification Sections, apply to this Section. Water Distribution Materials and installation shall comply with City of Columbus Division of Water requirements, standard drawings, and specifications.

### 1.2 SUMMARY

A. This Section includes piping and specialties for combined potable-water and fire-protection water service outside the building.

B. Related Sections include the following:

1. Division 15 Sections for fire-protection piping inside the building.
2. Division 15 Section "Water Distribution Piping" for potable-water piping inside the building.
3. Division 16 Section "Fire Alarm Systems."

### 1.3 DEFINITIONS

A. The following are industry abbreviations for plastic and rubber materials:

1. NP: Nylon.
2. PE: Polyethylene.
3. PP: Polypropylene.
4. PTFE: Polytetrafluoroethylene.
5. PVC: Polyvinyl chloride.

### 1.4 SYSTEM PERFORMANCE REQUIREMENTS

A. Minimum Working Pressures: The following are minimum pressure requirements for piping and specialties, unless otherwise indicated:

1. Combined Potable-Water and Fire-Protection Water Service: 160 psig (1100 kPa).
2. Potable-Water Service: 160 psig (1100 kPa).
3. Fire-Protection Water Service: 150 psig (1035 kPa).

### 1.5 SUBMITTALS

A. Product Data: For the following:

1. Pipe and fittings.
2. Flexible pipe fittings.
3. Valves.
4. Fire hydrants.

B. Record Drawings: At Project closeout of installed water-service piping according to Division 1 Section "Contract Closeout."

C. Test Reports: As specified in "Field Quality Control" Article in Part 3.

D. Purging and Disinfecting Reports: As specified in "Cleaning" Article in Part 3.

E. Maintenance Data: For specialties to include in the maintenance manuals specified in Division 1. Include data for the following:

1. Valves.
2. Fire hydrants.

1.6 QUALITY ASSURANCE

A. Product Options: Drawings indicate size, profiles, and dimensional requirements of water-service piping specialties and are based on specific types and models indicated. Other manufacturers' products with equal performance characteristics may be considered. Refer to Division 1 Section "Substitutions."

B. Comply with requirements of utility supplying water. Include tapping of water mains and backflow prevention.

C. Comply with standards of authorities having jurisdiction for potable water-service piping. Include materials, installation, testing, and disinfection.

D. Comply with NSF 61, "Drinking Water System Components--Health Effects," for materials for potable water.

E. Comply with standards of authorities having jurisdiction for fire-protection water-service piping. Include materials, hose threads, installation, and testing.

F. Comply with NFPA 24, "Installation of Private Fire Service Mains and Their Appurtenances," for materials, installations, tests, flushing, and valve and hydrant supervision.

G. Comply with ASTM F 645, "Guide for Selection, Design, and Installation of Thermoplastic Water Pressure Piping Systems."

H. Comply with NFPA 70, "National Electrical Code," for electrical connections between wiring and electrically operated devices.

I. Provide listing/approval stamp, label, or other marking on piping and specialties made to specified standards.

J. Listing and Labeling: Provide electrically operated specialties and devices specified in this Section that are listed and labeled.

1. The Terms "Listed" and "Labeled": As defined in NFPA 70, Article 100.
2. Listing and Labeling Agency Qualifications: A "Nationally Recognized Testing Laboratory" as defined in OSHA Regulation 1910.7.

## 1.7 DELIVERY, STORAGE, AND HANDLING

A. Preparation for Transport: Prepare valves, including fire hydrants, according to the following:

1. Ensure that valves are dry and internally protected against rust and corrosion.
2. Protect valves against damage to threaded ends and flange faces.
3. Set valves in best position for handling. Set valves closed to prevent rattling.

B. During Storage: Use precautions for valves, including fire hydrants, according to the following:

1. Do not remove end protectors, unless necessary for inspection; then reinstall for storage.
2. Protect from weather. Store indoors and maintain temperature higher than ambient dew-point temperature. Support off the ground or pavement in watertight enclosures when outdoor storage is necessary.

C. Handling: Use sling to handle valves and fire hydrants whose size requires handling by crane or lift. Rig valves to avoid damage to exposed valve parts. Do not use handwheels or stems as lifting or rigging points.

D. Deliver piping with factory-applied end-caps. Maintain end-caps through shipping, storage, and handling to prevent pipe-end damage and to prevent entrance of dirt, debris, and moisture.

E. Protect stored piping from moisture and dirt. Elevate above grade. Do not exceed structural capacity of floor when storing inside.

F. Protect flanges, fittings, and specialties from moisture and dirt.

G. Store plastic piping protected from direct sunlight. Support to prevent sagging and bending.

## 1.8 PROJECT CONDITIONS

A. Perform site survey, research public utility records, and verify existing utility locations. Contact utility-locating service for area where Project is located.

B. Site Information: Reports on subsurface condition investigations made during design of Project are available for informational purposes only; data in reports are not intended as representations or warranties of accuracy or continuity of conditions between soil borings. Owner assumes no responsibility for interpretations or conclusions drawn from this information.

## 1.9 SEQUENCING AND SCHEDULING

A. Coordinate connection to water main with utility company.

B. Coordinate piping materials, sizes, entry locations, and pressure requirements with building water distribution piping.

C. Coordinate piping materials, sizes, entry locations, and pressure requirements with building fire-protection water piping.

D. Coordinate with other utility work.

## PART 2 - PRODUCTS

### 2.1 MANUFACTURERS

A. Available Manufacturers: Subject to compliance with requirements, manufacturers offering products that may be incorporated into the Work include, but are not limited to, the following:

B. Manufacturers: Subject to compliance with requirements, provide products by one of the following:

1. Drilling-Machine, Sleeves, and Corporation Stops:

   a. Ford Meter Box Co., Inc.
   b. Grinnell Corp.; Mueller Co.; Water Products Div.
   c. Lee Brass Co.

2. Pipe and Fittings:

   a. American Cast Iron Pipe Co.; Waterous Co.
   b. Grinnell Corp.; Mueller Co.; Water Products Div.
   c. McWane, Inc.; Clow Valve Co. Div.
   d. McWane, Inc.; Kennedy Valve Div.
   e. United States Pipe & Foundry Co.

3. Bronze Corporation Stops and Valves:

   a. Ford Meter Box Co., Inc.
   b. Grinnell Corp.; Mueller Co.; Water Products Div.
   c. Lee Brass Co.
   d. Master Meter, Inc.
   e. McDonald: A.Y. McDonald Mfg. Co. or Equal.
   f. Red Hed Manufacturing Co.
   g. Watts Industries, Inc.; James Jones Co.

4. Tapping Sleeves and Valves:

   a. American Cast Iron Pipe Co.; Waterous Co.
   b. East Jordan Iron Works, Inc.
   c. Grinnell Corp.; Mueller Co.; Water Products Div.
   d. McWane, Inc.; Clow Valve Co. Div. (Oskaloosa)
   e. McWane, Inc.; Kennedy Valve Div.
   f. United States Pipe & Foundry Co.

5. Gate Valves:

   a. American Cast Iron Pipe Co.; Waterous Co.

b. East Jordan Iron Works, Inc.
c. Grinnell Corp.; Mueller Co.; Water Products Div.
d. McWane, Inc.; Clow Valve Co. Div. (Oskaloosa)
e. McWane, Inc.; Kennedy Valve Div.
f. United States Pipe & Foundry Co.

6. Indicator Posts and Indicator Gate Valves:

a. American Cast Iron Pipe Co.; American Flow Control Div.
b. American Cast Iron Pipe Co.; Waterous Co.
c. Grinnell Corp.; Grinnell Supply Sales Co.
d. Grinnell Corp.; Mueller Co.; Water Products Div.
e. McWane, Inc.; Clow Valve Co. Div. (Oskaloosa)
f. McWane, Inc.; Kennedy Valve Div.
g. Nibco, Inc.
h. Penn-Troy Machine Co.
i. Stockham Valves & Fittings, Inc.
j. United States Pipe & Foundry Co.

7. Dry-Barrel, Post Fire Hydrants:

a. American Flow Control
b. Mueller Co., Water Products Division
c. Kennedy
d. Clow

## 2.2 PIPES

A. General: Applications of the following pipe and tube materials are indicated in Part 3 "Piping Applications" Article.

B. Ductile-Iron, Push-on-Joint Pipe: Sizes 3” through 10”, use AWWA C151, Class 53, with cement-mortar lining and seal coat according to AWWA C104. Include rubber compression gasket according to AWWA C111. Sizes 12” through 24”, use AWWA C151, Class 54, with cement-mortar lining and seal coat according to AWWA C104. Include rubber compression gasket according to AWWA C111.

## 2.3 PIPE FITTINGS

A. General: Applications of the following pipe and tube fitting materials are indicated in Part 3 "Piping Applications" Article.

B. Ductile-Iron, Mechanical-Joint Fittings: AWWA C153, ductile-iron, compact type. Include cement-mortar lining and seal coat according to AWWA C104 and glands, rubber gaskets, and bolts and nuts according to AWWA C111. Include 250-psig (1725-kPa) minimum working-pressure rating; cement-mortar lining or epoxy, interior coating according to AWWA C550

C. Ductile-Iron, Deflection Fittings: Compound coupling fitting with sleeve and flexing sections, gaskets, and restrained-joint ends complying with AWWA C110 or AWWA C153. Include 250-psig (1725-kPa) minimum working-pressure rating; cement-mortar lining or epoxy, interior coating according to

AWWA C550; deflection of at least 20 degrees (0.34 radians); and glands, rubber gaskets, and bolts and nuts according to AWWA C111.

## 2.4 JOINING MATERIALS

A. General: Applications of the following piping joining materials are indicated in Part 3 "Piping Applications" Article.

B. Refer to Division 2 Section "Utility Materials" for commonly used joining materials.

C. Ductile-Iron Piping: The following materials apply:

1. Push-on Joints: AWWA C111 rubber gaskets and lubricant.
2. Mechanical Joints: AWWA C153 ductile-iron or gray-iron glands, high-strength steel bolts and nuts, and rubber gaskets.

D. Pipe Couplings: Iron-body sleeve assembly, fabricated to match OD of pipes to be joined.

1. Sleeve: ASTM A 126, Class B, gray iron.
2. Followers: ASTM A 47, malleable iron; or ASTM A 536, ductile iron.
3. Gaskets: Rubber.
4. Bolts and Nuts: AWWA C111.
5. Finish: Enamel paint

## 2.5 PIPING SPECIALTIES

A. Flexible Connectors for Nonferrous, Metal Piping: Bronze hose covered with bronze wire braid; with copper-tube, pressure-type, solder-joint ends or bronze flanged ends; brazed to hose.

B. Flexible Connectors for Ferrous Piping: Stainless-steel hose covered with stainless-steel wire braid; with ASME B1.20.1 threaded steel pipe nipples or ASME B16.5 steel pipe flanges; welded to hose.

C. Dielectric Fittings: Assembly or fitting with insulating material isolating joined dissimilar metals to prevent galvanic action and corrosion.

1. Description: Combination of copper alloy and ferrous; threaded, solder, plain, and weld-neck end types and matching piping system materials.
2. Dielectric Unions: Factory-fabricated union assembly, designed for 250-psig (1725-kPa) minimum working pressure at 180 deg F (82 deg C). Include insulating material isolating dissimilar metals and ends with inside threads according to ASME B1.20.1.
3. Dielectric Flanges: Factory-fabricated companion-flange assembly, for 150- or 300-psig (1035- or 2070-kPa) minimum pressure to suit system pressures.
4. Dielectric-Flange Insulation Kits: Field-assembled companion-flange assembly, full-face or ring type. Components include neoprene or phenolic gasket, phenolic or polyethylene bolt sleeves, phenolic washers, and steel backing washers.

    a. Provide separate companion flanges and steel bolts and nuts for 150- or 300-psig (1035- or 2070-kPa) minimum working pressure to suit system pressures.

5. Dielectric Couplings: Galvanized-steel couplings with inert and noncorrosive thermoplastic lining, with threaded ends and 300-psig (2070-kPa) minimum working pressure at 225 deg F (107 deg C).
6. Dielectric Nipples: Electroplated steel nipples with inert and noncorrosive thermoplastic lining, with combination of plain, threaded, or grooved end types and 300-psig (2070-kPa) working pressure at 225 deg F (107 deg C).

## 2.6 PE ENCASEMENT

A. PE Encasement for Ductile-Iron Piping: ASTM A 674 or AWWA C105, PE film, 0.008-inch (0.20-mm) minimum thickness, tube or sheet.

## 2.7 VALVES

A. Nonrising-Stem, Resilient-Seated Gate left hand open Valves, 3-Inch NPS and Larger: AWWA C509 or AWWA C500 gray- or ductile-iron body and bonnet; double disc, parallel seats, with bronze or gray- or ductile-iron gate, or resilient seats, bronze stem, and stem nut. Include 200-psig minimum working-pressure design, interior coating according to AWWA C550, and push-on- or mechanical-joint ends.

B. Valve Boxes: Cast-iron box with top section and cover with lettering "WATER," bottom section with base of size to fit over valve and barrel approximately 5 inches (125 mm) in diameter, and adjustable cast-iron extension of length required for depth of bury of valve.

1. Provide steel tee-handle operating wrench with each valve box. Include tee handle with one pointed end, stem of length to operate valve, and socket-fitting valve-operating nut.

C. Indicator Posts: UL 789, FM-approved, vertical-type, cast-iron body with operating wrench, extension rod, and adjustable cast-iron barrel of length required for depth of bury of valve.

D. Curb Stops: Bronze body ball, and wide tee head, with inlet and outlet to match service piping material.

E. Service Boxes for Curb Stops: Cast-iron box with telescoping top section of length required for depth of bury of valve. Include cover with lettering "WATER," and bottom section with base of size to fit over curb-stop and barrel approximately 3 inches (75 mm) in diameter.

1. Provide steel tee-handle shutoff rod with each service box. Include tee handle with one pointed end, stem of length to operate curb stop, and slotted end fitting curb-stop head.

F. Tapping Sleeve and Tapping Valve: Complete assembly, including tapping sleeve, tapping valve, and bolts and nuts. Use sleeve and valve compatible with tapping machine.

1. Tapping Sleeve: Cast- or ductile-iron, 2-piece bolted sleeve with flanged outlet for new branch connection. Sleeve may have mechanical-joint ends with rubber gaskets or sealing rings in sleeve body. Include sleeve matching size and type of pipe material being tapped and of outlet flange required for branch connection.

G. Service Clamps and Corporation Stops: Complete assembly, including service clamp, corporation stop, and bolts and nuts. Include service clamp and stop compatible with drilling machine.

1. Service Clamp: Stainless Steel with gasket and AWWA C800 threaded outlet for corporation stop, and threaded end straps.
2. Corporation Stops: Bronze body and ground-key plug, with AWWA C800 threaded inlet and outlet matching service piping material.
3. Manifold: Copper with 2 to 4 inlets as required, with ends matching corporation stops and outlet matching service piping.

H. Ball Valves: AWWA C507, Class 250. Include interior coating according to AWWA C550.

I. Butterfly Valves: AWWA C504, with 150-psig (1035-kPa) working-pressure rating. Include interior coating according to AWWA C550.

J. Butterfly Valves: UL 1091, with 175-psig (1200-kPa) working-pressure rating.

K. Check Valves: AWWA C508, with 175-psig (1200-kPa) working-pressure rating. Include interior coating according to AWWA C550.

L. Check Valves: UL 312, with swing clapper and 175-psig (1200-kPa) working-pressure rating.

## 2.8 FIRE HYDRANTS

A. Description: AWWA C502, one 4" Nozzle, 6-inch NPS ductile iron mechanical-joint inlet. Include 200-psig minimum working-pressure design and interior coating according to AWWA C550. Contractor to verify type, outlet size and thread with Local Fire Department and local Water Department prior to ordering hydrants. Due to standardization by the City Water Division, only the following types of hydrants will be permitted as follows: Mueller Centurion, American Darling MK 73, Kennedy K-10-B, and Clow "Eddy 4Z5"; Hydrant shall be Cast-iron body, compression-type valve, opening with or against pressure, 6-inch (DN150) mechanical-joint inlet, and 150-psig (1035-kPa) minimum working-pressure design.

B. Watch Valve: Each hydrant setting shall include one 6 inch diameter watch valve between the water main and the hydrant.

C. Outlet Threads: City of Columbus Thread (Verify size and thread used by local fire department and Division of Water before ordering) Include cast-iron caps with steel chains.

D. Operating and Cap Nuts: Square 7/8" at top, taper to 1" at bottom; 1 ¼" high.

E. Depth of Bury: 5 feet standard, unless otherwise shown.

F. Direction of Opening: Open hydrant valve by turning operating nut to right or clockwise.

G. Exterior Finish: Yellow alkyd-gloss enamel paint. Verify paint color with Division of Water.

## 2.9 FIRE SERVICE MAIN ACCESSORIES

A. Hose House: 16 gauge steel with red baked enamel finish, hoses, and nozzles.

B. Alarm Devices: UL 753 and FM approved including water flow indicators, supervisory switches, and pressure switches.

2.10 ANCHORAGES

H. Clamps, Straps, and Washers: ASTM A 506, steel.

I. Rods: ASTM A 575, steel.

J. Rod Couplings: ASTM A 197, malleable iron.

K. Bolts: ASTM A 307, steel.

L. Cast Iron Washers: ASTM A 126, gray iron.

M. Concrete Reaction Backing: ASTM C 150, Type I Portland cement for 3000 psi, 28 day minimum compressive strength.

2.11 IDENTIFICATION

N. Refer to Division 2 Section "Earthwork" for underground warning tape materials.

O. Install detectable warning tapes made of solid blue film with metallic core and continuously printed black-letter caption "CAUTION--WATER LINE BURIED BELOW."

P. Nonmetallic Piping Label: Engraved, plastic-laminate label at least 1 by 3 inches (25 by 75 mm), with caption "CAUTION--THIS STRUCTURE HAS NONMETALLIC WATER-SERVICE PIPING," for installation on main electrical meter panel.

PART 3 - EXECUTION

3.1 EARTHWORK

A. Refer to Division 2 Section "Earthwork" for excavation, trenching, and backfilling.

B. Refer to Division 2 Section "Hot-Mix Asphalt Paving" for cutting and patching of existing paving.

C. Refer to Division 2 Section "Portland Cement Concrete Paving" for cutting and patching of paving.

3.2 PIPING APPLICATIONS

A. General: Use pipe, fittings, and joining methods for piping systems according to the following applications:

B. Transition couplings and special fittings with pressure ratings at least equal to piping pressure rating may be used in applications below, unless otherwise indicated.

C. Do not use flanges or keyed couplings for underground piping.

1. Exception: Piping in boxes and structures, but not buried, may be joined with flanges or keyed couplings instead of joints indicated.

D. Flanges, keyed couplings, and special fittings may be used on aboveground piping.

E. Potable Water-Service Piping: Use the following:

1. 4-Inch NPS (DN100): Ductile-iron, push-on-joint pipe; ductile-iron, push-on-joint fittings; and gasketed joints.
2. 4-Inch NPS (DN100): Copper tube, Type K (Type A); copper fittings; and soldered joints.
3. 4-Inch NPS (DN100): Copper tube, Type L (Type B); copper fittings; and soldered joints.
4. 6-Inch NPS (DN150): Ductile-iron, push-on-joint pipe; ductile-iron, mechanical joint fittings; and gasketed joints.
5. 5- and 6-Inch NPS (DN125 and DN150): Copper tube, Type K (Type A); copper fittings; and brazed joints.
6. 5- and 6-Inch NPS (DN125 and DN150): Copper tube, Type L (Type B); copper fittings; and brazed joints.
7. 8-Inch NPS (DN200): Ductile-iron, push-on-joint pipe; ductile-iron, mechanical joint fittings; and gasketed joints.

F. Fire-Protection Water-Service Piping: Use the following:

1. 4- to 8-Inch NPS (DN100 to DN200): Ductile-iron, push-on-joint pipe; ductile-iron, mechanical joint fittings; and gasketed joints.
2. 10- and 12-Inch NPS (DN250 and DN300): Ductile-iron, push-on-joint pipe; ductile-iron, mechanical joint fittings; and gasketed joints.

G. Combined Potable-Water and Fire-Protection Water-Service Piping: Use the following:

1. 6- to 12-Inch NPS (DN150 to DN300): Ductile-iron, push-on-joint pipe; ductile-iron, mechanical joint fittings; and gasketed joints.

## 3.3 VALVE APPLICATIONS

A. Drawings indicate valve types to be used. Where specific valve types are not indicated, the following requirements apply:

1. Underground Valves, 3-Inch NPS (DN80) and Larger: AWWA C509 gate valves, non-rising stem, with valve box.

## 3.4 JOINT CONSTRUCTION

A. Refer to Division 2 Section "Utility Materials" for basic piping joint construction.

B. Ductile-Iron Piping, Gasketed Joints: According to AWWA C600.

C. Ductile-Iron Piping, Gasketed Joints for Fire-Service Piping: According to UL 194 and AWWA C600.

D. Flanged Joints: Align flanges and install gaskets. Assemble joints by sequencing bolt tightening. Use lubricant on bolt threads.

E. Threaded Joints: Thread pipes with tapered pipe threads according to ASME B1.20.1, apply tape or joint compound, and apply wrench to fitting and valve ends into which pipes are being threaded.

F. Ductile-Iron, Keyed-Coupling Joints: Cut-groove pipes. Assemble joints with keyed couplings, gaskets, lubricant, and bolts according to coupling and fitting manufacturer's written instructions.

G. Copper Tubing, Brazed Joints: According to AWS's "Brazing Handbook," Chapter "Pipe and Tube."

H. Copper Tubing, Soldered Joints: According to AWS's "Soldering Manual," Chapter "The Soldering of Pipe and Tube."

I. Copper Tubing, Soldered Joints: According to CDA's "Copper Tube Handbook."

## 3.5 PIPING SYSTEMS - COMMON REQUIREMENTS

A. General Locations and Arrangements: Drawings indicate general location and arrangement of piping systems. Indicated locations and arrangements were used to size pipe and calculate friction loss, expansion, pump sizing, and other design considerations. Install piping as indicated, unless deviations to layout are approved on Coordination Drawings.

B. Install piping at indicated slope.

C. Install components with pressure rating equal to or greater than system operating pressure.

D. Install piping free of sags and bends.

E. Locate groups of pipes parallel to each other, spaced to permit valve servicing.

F. Install fittings for changes in direction and branch connections.

G. Piping Connections: Unless otherwise indicated, make piping connections as specified below:

## 3.6 SERVICE ENTRANCE PIPING

A. Extend water-service piping and connect to water-supply source and building water piping systems at outside face of building wall in locations and pipe sizes indicated.

1. Terminate water-service piping 5 feet outside building wall until building water piping systems are installed. Terminate piping with caps, plugs, or flanges as required for piping material. Make connections to building water piping systems when those systems are installed.

B. Sleeves and mechanical sleeve seals are specified in Division 15 Section "Basic Mechanical Materials and Methods."

C. Install underground piping with restrained joints at horizontal and vertical changes in direction. Use restrained-joint piping, thrust blocks, anchors, tie-rods and clamps, and other supports.

D. Anchor service-entry piping to building wall.

## 3.7 PIPING INSTALLATION

A. Water-Main Connection: Tap water main with size and in location as indicated according to requirements of water utility.

B. Make connections larger than 2-inch NPS (DN50) with tapping machine according to the following:

1. Install tapping sleeve and tapping valve according to manufacturer's written instructions.
2. Install tapping sleeve on pipe to be tapped. Position flanged outlet for gate valve.
3. Install gate valve onto tapping sleeve. Comply with AWWA C600. Install valve with stem pointing up and with cast-iron valve box.
4. Use tapping machine compatible with valve and tapping sleeve; cut hole in main. Remove tapping machine and connect water-service piping.

C. Comply with NFPA 24 for fire-protection water-service piping materials and installation.

D. Install ductile-iron piping according to AWWA C600.

1. Encase piping with PE film according to ASTM A 674 or AWWA C105.

E. Install copper tube and fittings according to CDA's "Copper Tube Handbook."

F. Install AWWA PVC plastic pipe according to AWWA M23 and ASTM F 645.

G. Install PE plastic pipe according to ASTM D 2774, ASTM F 645, and manufacturer's written instructions.

H. Install PEX plastic tubing according to ASTM D 2774, ASTM F 645, and manufacturer's written instructions.

I. Bury piping with depth of cover over top at least 42 inches (750 mm), with top at least 12 inches (300 mm) below level of maximum frost penetration, and according to the following:

1. Under Driveways: With at least 42 inches (900 mm) cover over top.
2. Under Railroad Tracks: With at least 48 inches (1200 mm) cover over top.

J. Install piping under streets and other obstructions that cannot be disturbed, by tunneling, jacking, or combination of both.

## 3.8 ANCHORAGE INSTALLATION

A. Install anchorages for tees, plugs and caps, bends, crosses, valves, and hydrant branches. Include anchorages for the following piping systems:

1. Gasketed-Joint, Ductile-Iron, Potable-Water Piping: According to AWWA C600.
2. Gasketed-Joint, PVC Potable-Water Piping: According to AWWA M23.
3. Fire-Service Piping: According to NFPA 24.

B. Apply full coat of asphalt or other acceptable corrosion-retarding material to surfaces of installed ferrous anchorage devices.

## 3.9 VALVE INSTALLATION

A. General Application: Use mechanical-joint-end valves for 3-inch NPS (DN80) and larger underground installation. Use threaded- and flanged-end valves for installation in pits. Use nonrising-stem UL/FM gate valves for installation with indicator posts. Use bronze corporation stops and valves, with ends compatible with piping, for 2-inch NPS (DN50) and smaller installation.

B. AWWA-Type Gate Valves: Comply with AWWA C600. Install underground valves with stem pointing up and with cast-iron valve box.

C. UL/FM-Type Gate Valves: Comply with NFPA 24. Install underground valves and valves in pits with stem pointing up and with vertical cast-iron indicator post.

D. Bronze Corporation Stops and Curb Stops: Comply with manufacturer's written instructions. Install underground curb stops with head pointed up and with cast-iron curb box.

## 3.10 FIRE HYDRANT INSTALLATION

A. General: Install each fire hydrant with separate gate valve in supply pipe, anchor with restrained joints and anchoring tee, thrust blocks, and support in upright position. Wrap hydrant barrel, valve, and supply line to ground level in P.E. encasement. Back fill with granular material and compact to support hydrant.

B. AWWA-Type Fire Hydrants: Comply with AWWA M17.

C. UL/FM-Type Fire Hydrants: Comply with NFPA 24.

## 3.11 IDENTIFICATION INSTALLATION

A. Install continuous plastic underground warning tape and Magnetic detectable 14 gauge conductor trace wire. during back-filling of trench for underground water-service piping. Locate 16 inches to 24 inches below finished grade, directly over piping.

B. Attach nonmetallic piping label permanently to main electrical meter panel.

## 3.12 FIELD QUALITY CONTROL

A. Water main testing shall be performed in accordance with local agency jurisdiction.

B. Piping Tests: Conduct piping tests before joints are covered and after thrust blocks have hardened sufficiently. Fill pipeline 24 hours before testing and apply test pressure to stabilize system. Use only potable water.

C. Hydrostatic Tests: Test at not less than 1-1/2 times working pressure, or 150 psi, whichever is greater, for 2 hours. Furnish all necessary equipment and materials to conduct the test. All taps shall be made prior to conducting the test.

1. Comply with AWWA C-600 for Testing requirements.

D. Prepare reports for testing activities.

3.13 CLEANING

A. Clean and disinfect water distribution piping according to AWWA C651, and as follows:

1. Use purging and disinfecting procedure prescribed by authorities having jurisdiction or, if method is not prescribed by authorities, use procedure described in AWWA C651 or as described below:

a. Fill system or part of system with water/chlorine solution containing at least 50 ppm of chlorine. Isolate system or part thereof and allow to stand for 24 hours.
b. Drain system or part of system of previous solution and refill with water/chlorine solution containing at least 200 ppm of chlorine; isolate and allow to stand for 3 hours.
c. Following allowed standing time, flush system with clean, potable water until chlorine does not remain in water coming from system.
d. Submit water samples in sterile bottles to authorities having jurisdiction. Repeat procedure if biological examination shows evidence of contamination.

B. Prepare reports for purging and disinfecting activities.

STANDARD CONSTRUCTION DRAWINGS – CITY OF COLUMBUS

| | SIZE OF VALVE | L | VOLUME CU-FT |
|---|---|---|---|
| GATE VALVES | 3" | 15" | 0.31 |
| | 4" | 16" | 0.33 |
| | 6" | 17" | 0.36 |
| | 8" | 20" | 0.42 |
| | 12" | 24" | 0.50 |
| | 16" | 30" | 0.63 |
| BUTTERFLY VALVES | 20" | 36" | 0.75 |
| | 24" | 42" | 0.88 |
| | 30" | 48" | 1.00 |

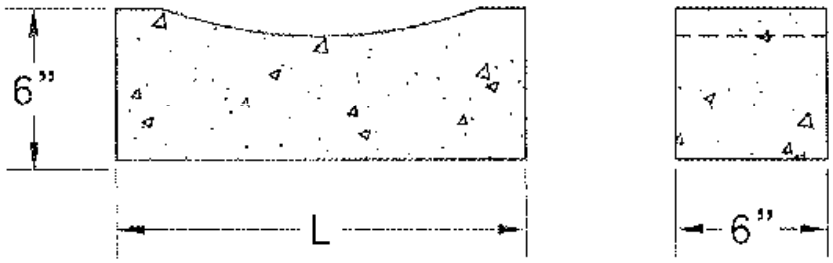


CITY OF COLUMBUS
DEPARTMENT OF PUBLIC UTILITIES
DIVISION OF WATER

APPROVED: Dell Dunbar 4/1/01
ENGINEER DATE

STANDARD DETAIL
CONCRETE VALVE SUPPORTS

L-6306

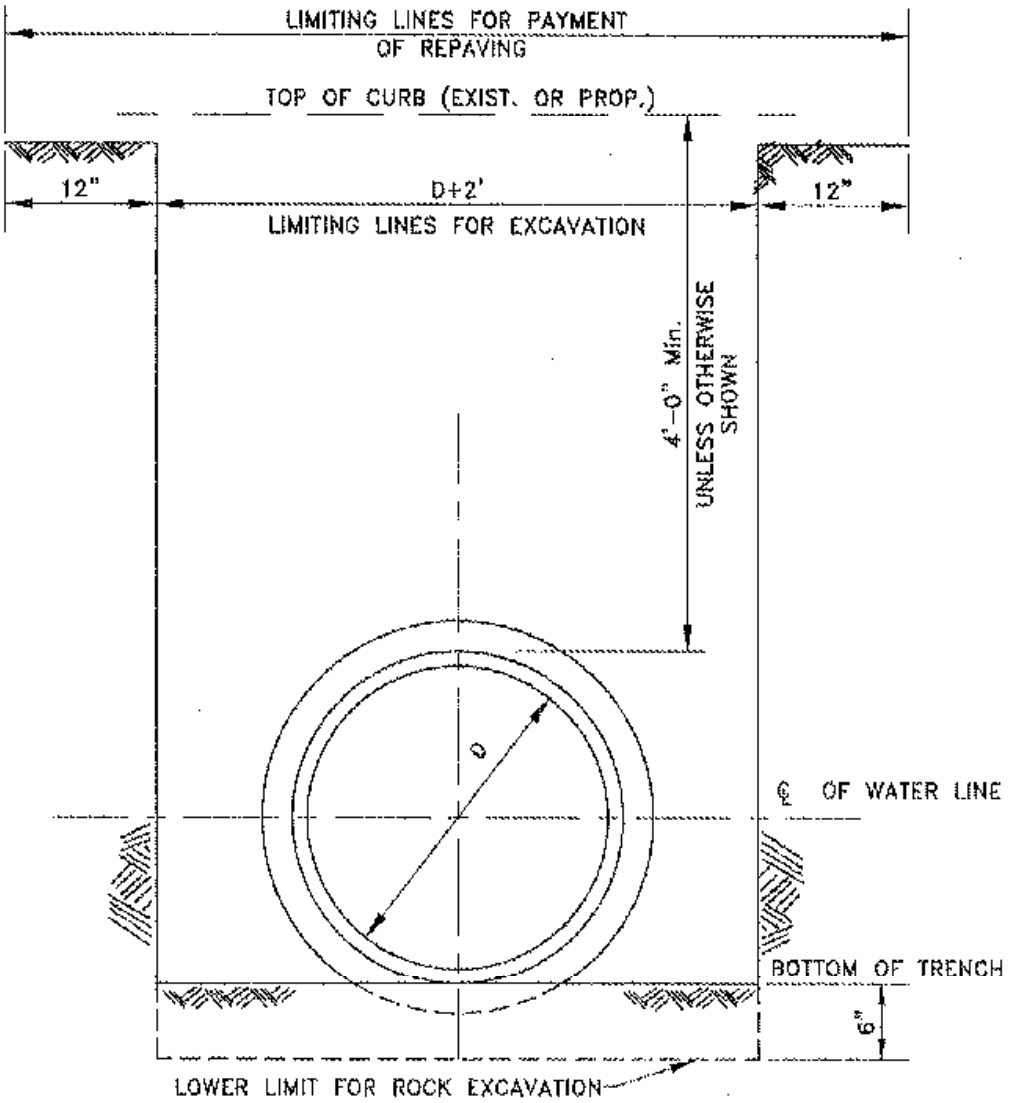


| CITY OF COLUMBUS<br>DEPARTMENT OF PUBLIC UTILITIES<br>DIVISION OF WATER | STANDARD DETAIL<br>TYPICAL TRENCH | L-6309 |
|---|---|---|
| APPROVED:<br>ENGINEER 4/1/01 DATE | | |

L-6315.DWG

CITY OF COLUMBUS
DEPARTMENT OF PUBLIC UTILITIES
DIVISION OF WATER

APPROVED:
ENGINEER(A)
DATE

STANDARD DETAIL

# BACKING FOR VERTICAL BENDS

(OVER BENDS ONLY)

L-6310

| SIZE OF PIPE | 11.25° | | | | 22.5° | | | | 45° | | | | 90° | | | |
|---|---|---|---|---|---|---|---|---|---|---|---|---|---|---|---|---|
| | L" | W" | H" | Vol. | L" | W" | H" | Vol. | L" | W" | H" | Vol. | L" | W" | H" | Vol. |
| 3" | 12 | 18 | 12 | 1.5 | 13 | 25 | 16 | 3.0 | 18 | 30 | 19 | 5.9 | 25 | 30 | 24 | 10.4 |
| 4" | 12 | 24 | 16 | 2.6 | 16 | 30 | 18 | 5.0 | 22 | 36 | 24 | 11.0 | 27 | 48 | 25 | 18.7 |
| 6" | 12 | 48 | 18 | 6.0 | 15 | 43 | 36 | 13.4 | 30 | 55 | 24 | 22.9 | 37 | 54 | 36 | 41.6 |
| 8" | 12 | 53 | 24 | 10.5 | 18 | 57 | 34 | 20.2 | 36 | 57 | 33 | 39.2 | 47 | 60 | 46 | 75.0 |
| 12" | 20 | 54 | 36 | 22.6 | 37 | 62 | 37 | 49.0 | 48 | 62 | 51 | 87.9 | 66 | 66 | 66 | 166.4 |
| 16" | 31 | 55 | 38 | 44.3 | 60 | 65 | 39 | 88.1 | 65 | 65 | 65 | 159.2 | 72 | 96 | 72 | 288.0 |
| 20" | 45 | 70 | 40 | 72.8 | 56 | 70 | 60 | 136.2 | 72 | 76 | 78 | 247.0 | 86 | 108 | 84 | 451.8 |
| 24" | 41 | 72 | 54 | 92.3 | 67 | 74 | 69 | 198.0 | 88 | 84 | 84 | 359.1 | 96 | 120 | 96 | 640.0 |

NOTES:
1. VOLUMES GIVEN IN CUBIC FEET.
2. BACKER TO BE CENTERED HORIZONTALLY ON BEND.
3. STEEL WILL BE USED AS REQUIRED BY THE ENGINEER.

SECTION A–A

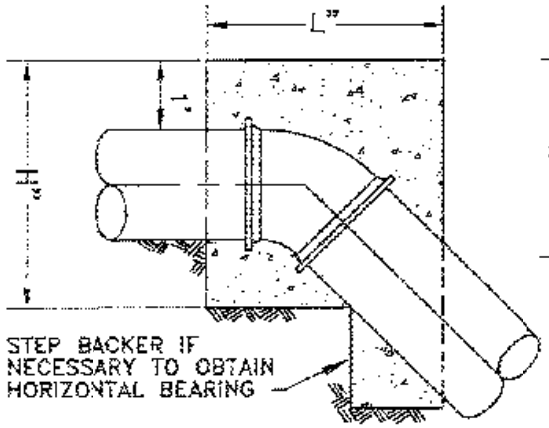


PLAN VIEW

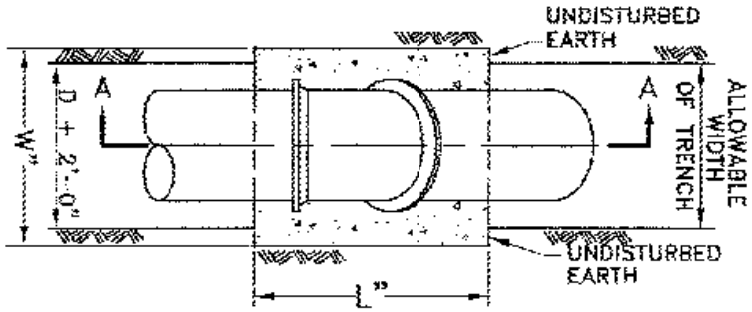

| SIZE OF PIPE | DEGREE OF BEND | | | | | | | | | | | |
|---|---|---|---|---|---|---|---|---|---|---|---|---|
| | 11.25° | | | 22.50° | | | 45° | | | 90° | | |
| | L" | D" | Vc.f. | L" | D" | Vc.f. | L" | D" | Vc.f. | L" | D" | Vc.f. |
| 3" | 4 | 3 | 0.1 | 6 | 4 | 0.2 | 10 | 4 | 0.3 | 10 | 4 | 0.3 |
| 4" | 5 | 4 | 0.2 | 9 | 5 | 0.4 | 14 | 5 | 0.6 | 14 | 5 | 0.6 |
| 6" | 8 | 6 | 0.5 | 12 | 7 | 0.7 | 20 | 8 | 1.4 | 18 | 9 | 1.7 |
| 8" | 9 | 8 | 0.7 | 16 | 9 | 1.4 | 24 | 12 | 2.7 | 25 | 11 | 4.0 |
| 12" | 14 | 12 | 1.8 | 24 | 14 | 3.6 | 36 | 18 | 6.8 | 32 | 18 | 10.7 |
| 16" | 18 | 16 | 3.4 | 32 | 18 | 6.7 | 36 | 32 | 13.4 | 41 | 26 | 25.6 |
| 20" | 25 | 20 | 6.4 | 30 | 30 | 11.5 | 49 | 36 | 20.5 | 50 | 32 | 46.5 |
| 24" | 27 | 24 | 9.0 | 39 | 34 | 18.4 | 60 | 42 | 35.0 | 58 | 40 | 77.7 |
| STEEL WILL BE USED AS REQUIRED BY ENGINEER | | | | | | | | | | | | |

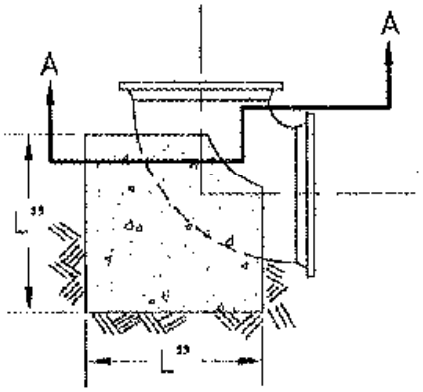


90° BENDS

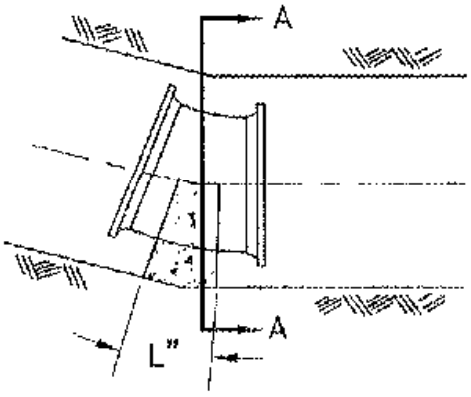


BENDS LESS THAN 90°

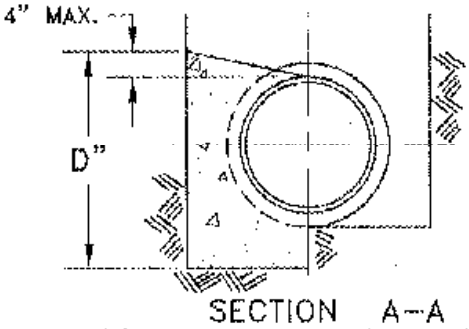


SECTION A–A

NOTES:
1. BACKER DESIGNED FOR 3000 PSF SOIL BEARING.
2. CONCRETE TO BE PLACED AGAINST UNDISTURBED EARTH.

| CITY OF COLUMBUS DEPARTMENT OF PUBLIC UTILITIES DIVISION OF WATER | STANDARD DETAIL BACKING FOR BENDS HORIZONTAL AND VERTICAL SAG | L-6311 |
|---|---|---|
| APPROVED: ENGINEER 4/1/01 DATE | | |

| RUN | BRANCH | | | | | | | | | | | | | | | | | | | | | | | |
|---|---|---|---|---|---|---|---|---|---|---|---|---|---|---|---|---|---|---|---|---|---|---|---|---|
| | 3" | | | 4" | | | 6" | | | 8" | | | 12" | | | 16" | | | 20" | | | 24" | | |
| | L" | D" | Vc.f | L" | D" | Vc.f | L" | D" | Vc.f | L" | D" | Vc.f | L" | D" | Vc.f | L" | D" | Vc.f | L" | D" | Vc.f | L" | D" | Vc.f |
| 3" | 12 | 5 | 0.5 | | | | | | | | | | | | | | | | | | | | | |
| 4" | 10 | 6 | 0.5 | 11 | 8 | 0.8 | | | | | | | | | | | | | | | | | | |
| 6" | 9 | 7 | 0.5 | 11 | 8 | 0.8 | 18 | 12 | 1.9 | | | | | | | | | | | | | | | |
| 8" | 8 | 8 | 0.5 | 10 | 9 | 0.7 | 18 | 12 | 1.9 | 23 | 16 | 3.5 | | | | | | | | | | | | |
| 12" | 6 | 12 | 0.6 | 8 | 12 | 0.8 | 18 | 12 | 1.9 | 23 | 16 | 3.5 | 38 | 22 | 8.7 | | | | | | | | | |
| 16" | 6 | 16 | 0.8 | 6 | 16 | 0.8 | 14 | 16 | 2.0 | 20 | 18 | 3.3 | 36 | 23 | 8.7 | 49 | 30 | 13.6 | | | | | | |
| 20" | 6 | 20 | 1.0 | 6 | 20 | 1.0 | 11 | 20 | 1.9 | 18 | 20 | 3.3 | 35 | 24 | 8.7 | 46 | 32 | 13.6 | 60 | 38 | 26.5 | | | |
| 24" | 6 | 24 | 1.2 | 6 | 24 | 1.2 | 9 | 24 | 1.9 | 15 | 24 | 3.3 | 30 | 28 | 8.7 | 42 | 36 | 14.0 | 54 | 42 | 26.3 | 68 | 48 | 45.4 |

STEEL WILL BE USED AS REQUIRED BY THE ENGINEER

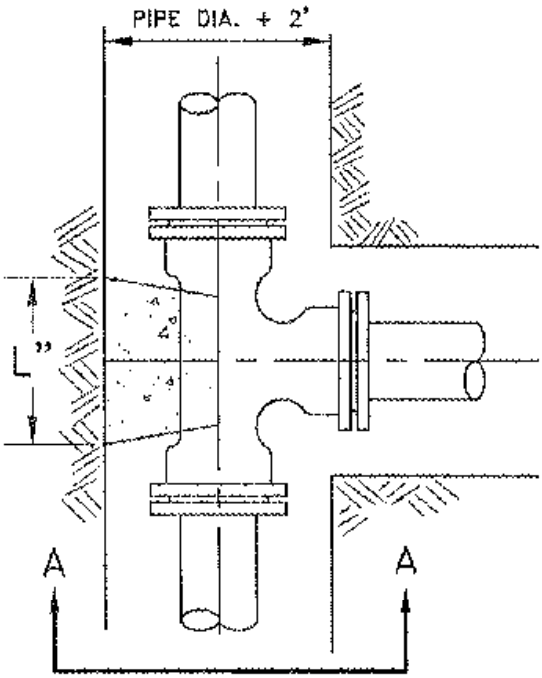


PLAN VIEW

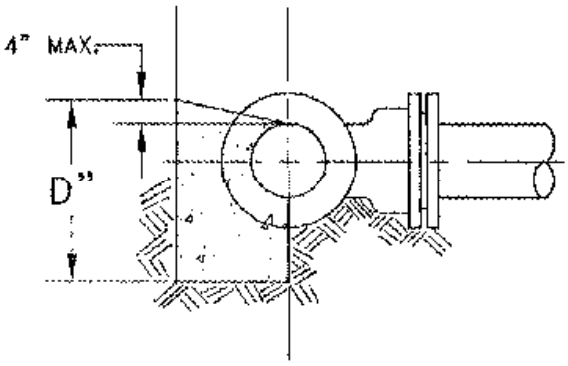


SECTION A–A

NOTES:

1. BACKER DESIGNED FOR 3000 PSF SOIL BEARING.
2. CONCRETE TO BE PLACED AGAINST UNDISTURBED EARTH.
3. PROVIDE CLEARANCE FOR REMOVAL OF BOLTS.

| CITY OF COLUMBUS DEPARTMENT OF PUBLIC UTILITIES DIVISION OF WATER | STANDARD DETAIL BACKING FOR TEES | L-6312 |
|---|---|---|
| APPROVED: ENGINEER 4/1/01 DATE | | |

L-6312.DWG

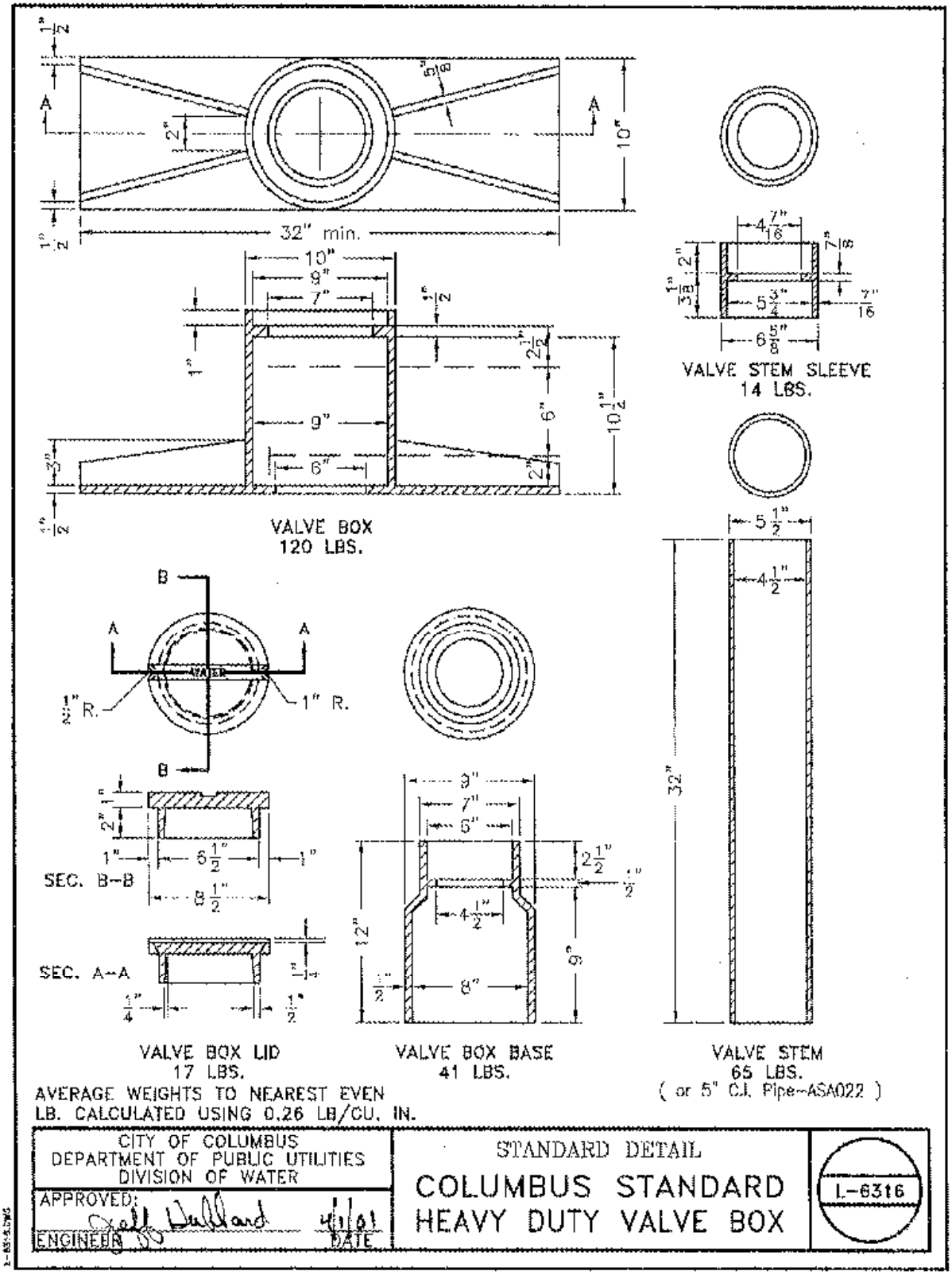
32" min.
VALVE BOX
120 LBS.
VALVE STEM SLEEVE
14 LBS.
SEC. B-B
SEC. A-A
VALVE BOX LID
17 LBS.
VALVE BOX BASE
41 LBS.
VALVE STEM
65 LBS.
( or 5" C.I. Pipe-ASA022 )
AVERAGE WEIGHTS TO NEAREST EVEN
LB. CALCULATED USING 0.26 LB/CU. IN.
CITY OF COLUMBUS
DEPARTMENT OF PUBLIC UTILITIES
DIVISION OF WATER
APPROVED:
ENGINEER
DATE
STANDARD DETAIL
COLUMBUS STANDARD
HEAVY DUTY VALVE BOX
L-6316

NOTE:
All Meter Vaults Shall Be Pre-Approved
By D.O.W. Engineering Office.

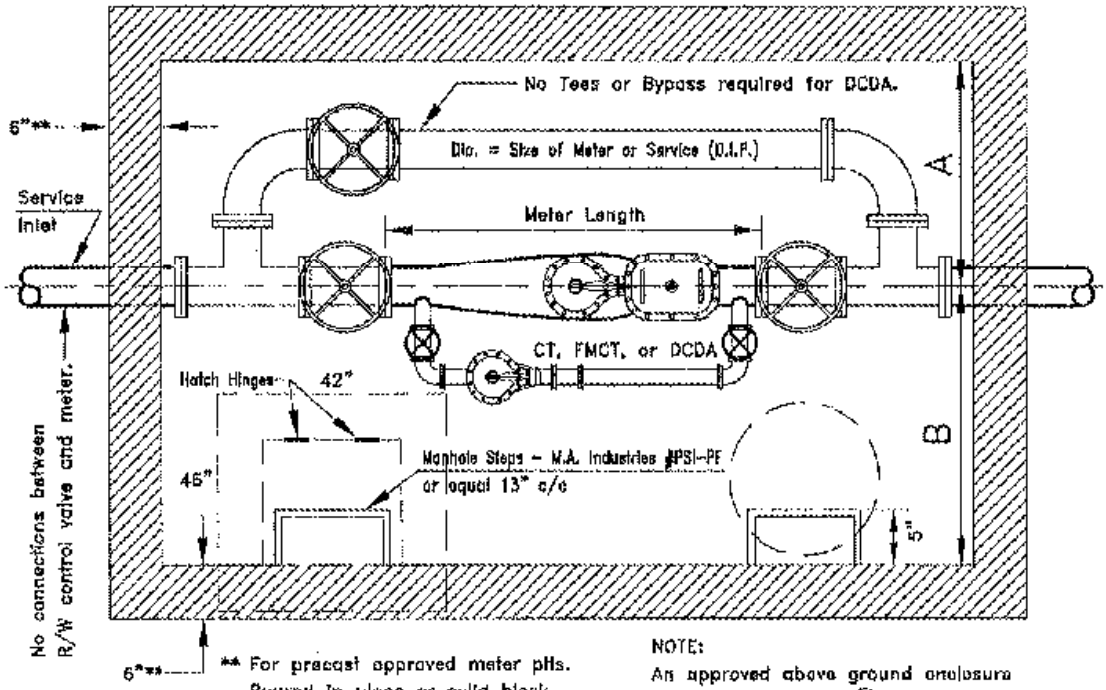


** For precast approved meter pits. Poured in place or solid block walls require D.O.W. pre-approval.

NOTE:
An approved above ground enclosure such as the Hot Box® may be used in lieu of a meter pit.

| Size | | | Inside Vault Dimension | | Meter Length | | | | Min. Wall Clearance | |
|---|---|---|---|---|---|---|---|---|---|---|
| Main Meter | CT w/ FM | Disc w/DC | Length | Width | FM CT | DCDA | CT | Disc | A | B |
| 1 1/2" | | | 6'-0" | 5'-0" | | | | 13 1/4" | 2'-6" | 2'-6" |
| 2" | | | 7'-0" | 5'-0" | | | 1'-5" | | 2'-6" | 2'-6" |
| 3" | 2" | 5/8" | 8'-0" | 5'-0" | 2'-9" | * | 2'-0" | | 2'-6" | 2'-6" |
| 4" | 2" | 5/8" | 8'-0" | 6'-0" | 2'-9" | * | 2'-5" | | 3'-0" | 3'-0" |
| 6" | 3" | 5/8" | 10'-0" | 8'-0" | 3'-9" | * | | | 4'-0" | 4'-0" |
| 8" | 4" | 5/8" | 11'-0" | 9'-0" | 4'-5" | * | | | 4'-6" | 4'-6" |
| 10" | 6" | 1" | 15'-0" | 10'-0" | 5'-8" | * | | | 5'-0" | 5'-0" |
| 10"x12" | 6" | | 15'-0" | 10'-0" | 5'-9" | | | | 5'-0" | 5'-0" |

* DCDA shall be A.S.S.E. #1048 and will vary by manufacturer.

Dimensions shown are face to face. Allowances must be provided for the thickness of the gaskets to be used.

1 1/2" Meter Settings shall be constructed using the Meter Setter provided by the Division of Water.

CITY OF COLUMBUS
DEPARTMENT OF PUBLIC UTILITIES
DIVISION OF WATER

APPROVED: [signature] 4/1/01
ENGINEER DATE

STANDARD DETAIL
METER SETTING
1-1/2" THRU 10" x 12" METERS

L-6317A

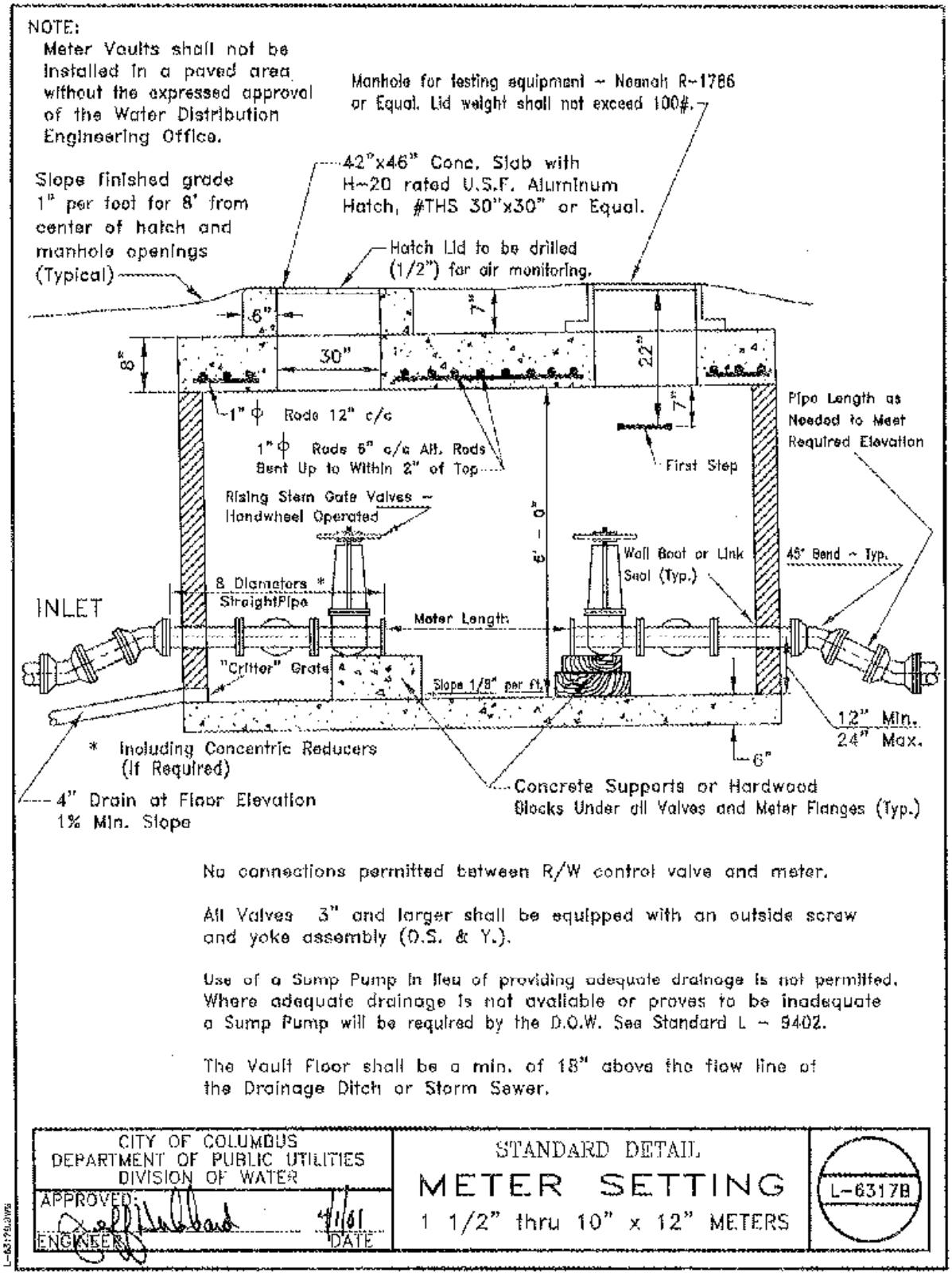


No connections permitted between R/W control valve and meter.

All Valves 3" and larger shall be equipped with an outside screw and yoke assembly (O.S. & Y.).

Use of a Sump Pump in lieu of providing adequate drainage is not permitted. Where adequate drainage is not available or proves to be inadequate a Sump Pump will be required by the D.O.W. See Standard L ~ 9402.

The Vault Floor shall be a min. of 18" above the flow line of the Drainage Ditch or Storm Sewer.

| CITY OF COLUMBUS<br>DEPARTMENT OF PUBLIC UTILITIES<br>DIVISION OF WATER | STANDARD DETAIL<br>METER SETTING<br>1 1/2" thru 10" x 12" METERS | L-6317B |
|---|---|---|
| APPROVED: ENGINEER 4/1/01 DATE | | |

Note:
No Tees or Bypass for DCDA Setting. Use Meter setter provided for 1 1/2" Meters securing Setter to wall or floor.

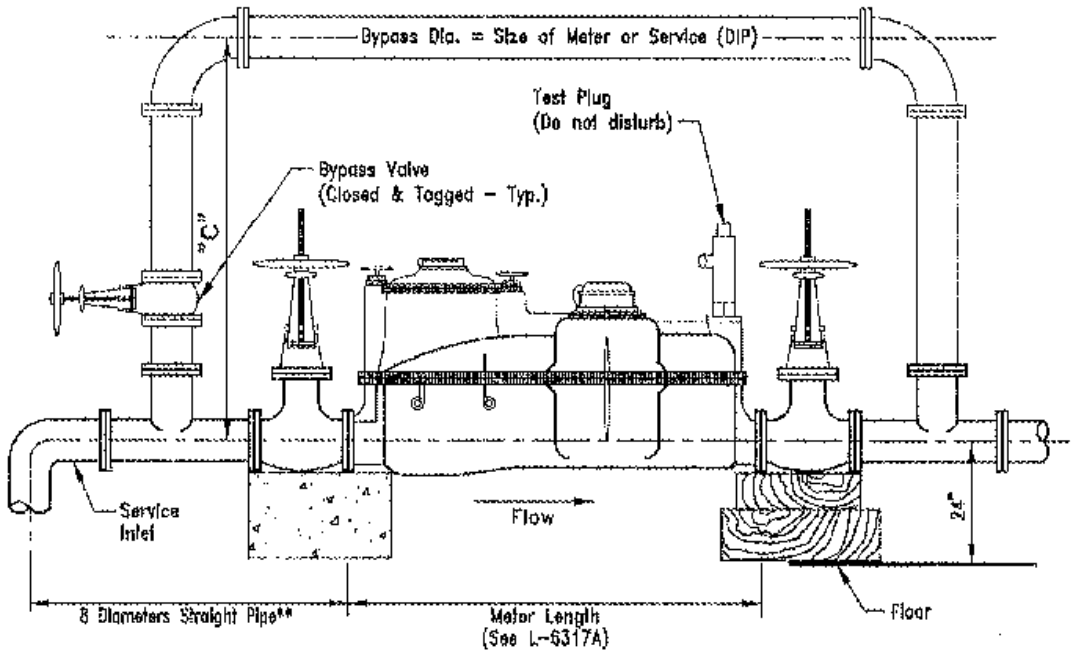


| CLEARANCE REQUIRED "C" | | | |
|---|---|---|---|
| METER SIZE | CT | FMCT | WALL CLEARANCE |
| 2" | 33" | N/A | 18" |
| 3" | 42" | 48" | 18" |
| 4" | 45" | 52" | 18" |
| 6" | 54" | 60" | 24" |
| 8" | N/A | 70" | 24" |
| 10" | N/A | 78" | 24" |
| 10" X 12" | N/A | 86" | 24" |

## WALL CLEARANCE

Wall clearance is defined as the shortest distance from a meter or piping surface to any wall or other obstacle behind the meter and shall be maintained throughout the meter setting from inlet valve to outlet valve. A 24" minimum clearance shall be maintained in front of the meter to ensure adequate access for reading and repairs.

## VALVING

2" Valves shall be of bronze construction and either gate valves with rising stems and wheel handles or ball valves with lever handles (drilled for sealing wire). Valves 3" and larger shall be gate valves with outside stems and yokes (O.S.&Y.).

** Including Concentric Reducers if required.

| CITY OF COLUMBUS<br>DEPARTMENT OF PUBLIC UTILITIES<br>DIVISION OF WATER | STANDARD DETAIL<br>ALTERNATE METER SETTING<br>(INSIDE BUILDING ONLY)<br>2" THRU 10" x 12" METERS | L-6317C |
|---|---|---|
| APPROVED: Jeff Hubbard 4/1/01<br>ENGINEER DATE | | |

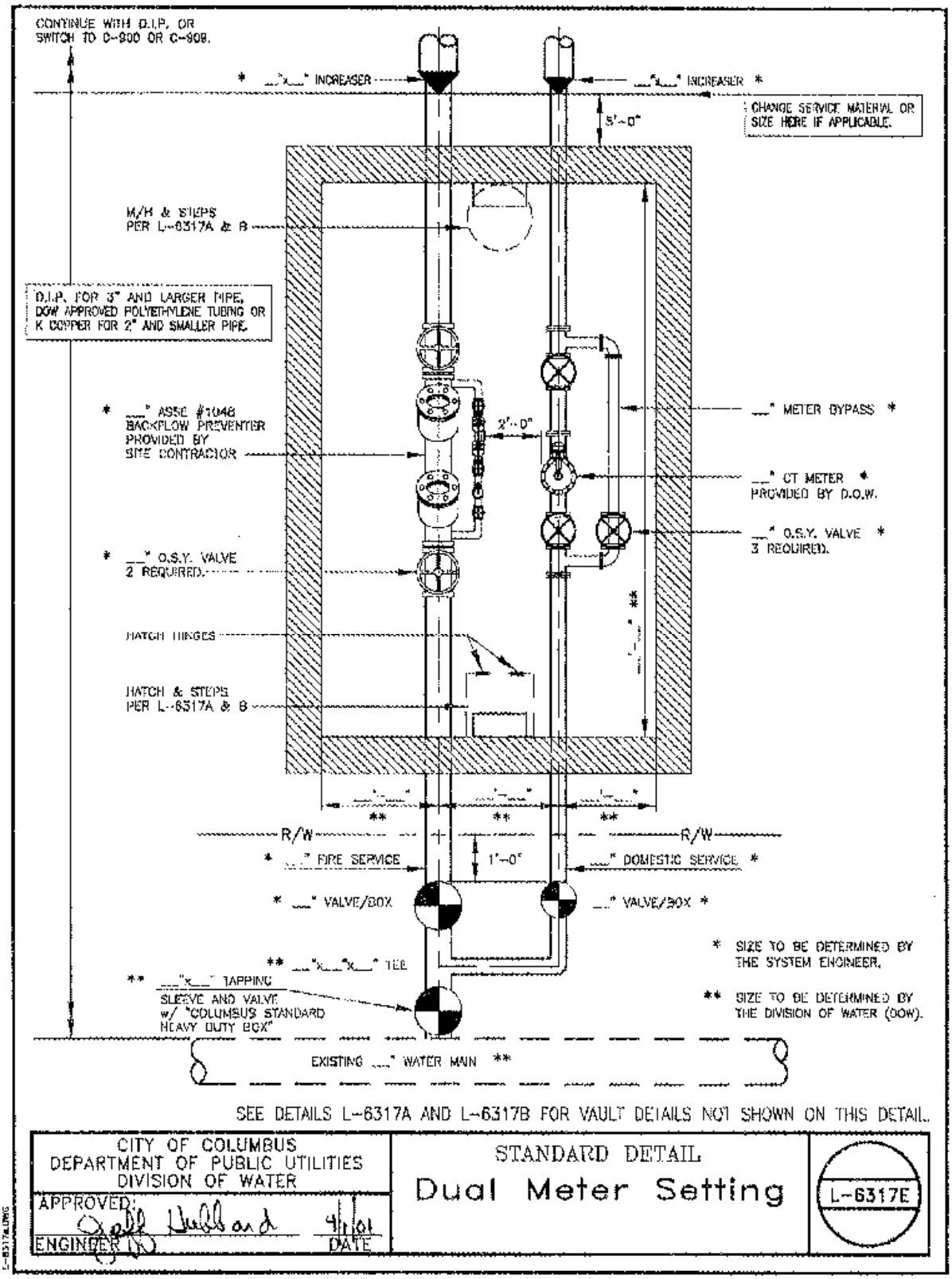
CONTINUE WITH D.I.P. OR SWITCH TO C-900 OR C-909.
* __"x__" INCREASER
__"x__" INCREASER *
CHANGE SERVICE MATERIAL OR SIZE HERE IF APPLICABLE.
5'-0"
M/H & STEPS PER L-6317A & B
D.I.P. FOR 3" AND LARGER PIPE, DOW APPROVED POLYETHYLENE TUBING OR K COPPER FOR 2" AND SMALLER PIPE.
* __" ASSE #1048 BACKFLOW PREVENTER PROVIDED BY SITE CONTRACTOR
2'-0"
__" METER BYPASS *
__" CT METER * PROVIDED BY D.O.W.
__" O.S.Y. VALVE * 3 REQUIRED.
* __" O.S.Y. VALVE 2 REQUIRED.
HATCH HINGES
HATCH & STEPS PER L-6317A & B
R/W
R/W
* __" FIRE SERVICE
1'-0"
__" DOMESTIC SERVICE *
* __" VALVE/BOX
__" VALVE/BOX *
** __"x__"x__" TEE
** __"x__" TAPPING SLEEVE AND VALVE w/ "COLUMBUS STANDARD HEAVY DUTY BOX"
* SIZE TO BE DETERMINED BY THE SYSTEM ENGINEER.
** SIZE TO BE DETERMINED BY THE DIVISION OF WATER (DOW).
EXISTING __" WATER MAIN **
SEE DETAILS L-6317A AND L-6317B FOR VAULT DETAILS NOT SHOWN ON THIS DETAIL.
CITY OF COLUMBUS
DEPARTMENT OF PUBLIC UTILITIES
DIVISION OF WATER
APPROVED:
ENGINEER
DATE
STANDARD DETAIL
Dual Meter Setting
L-6317E

| LENGTH OF PIPE | GALLONS PER HOUR | | | | | | | | | |
|---|---|---|---|---|---|---|---|---|---|---|
| | 6"Pipe | 8"Pipe | 12"Pipe | 16"Pipe | 20"Pipe | 24"Pipe | 30"Pipe | 36"Pipe | 42"Pipe | 48"Pipe |
| 50 | 0.03 | 0.04 | 0.06 | 0.07 | 0.09 | 0.11 | 0.14 | 0.17 | 0.19 | 0.22 |
| 100 | 0.06 | 0.07 | 0.11 | 0.15 | 0.18 | 0.22 | 0.28 | 0.33 | 0.39 | 0.44 |
| 200 | 0.11 | 0.15 | 0.22 | 0.29 | 0.37 | 0.44 | 0.55 | 0.66 | 0.77 | 0.88 |
| 300 | 0.17 | 0.22 | 0.33 | 0.44 | 0.55 | 0.66 | 0.83 | 0.99 | 1.16 | 1.32 |
| 400 | 0.22 | 0.29 | 0.44 | 0.59 | 0.74 | 0.88 | 1.10 | 1.32 | 1.55 | 1.77 |
| 500 | 0.28 | 0.37 | 0.55 | 0.74 | 0.92 | 1.10 | 1.38 | 1.66 | 1.93 | 2.21 |
| 1000 | 0.55 | 0.74 | 1.10 | 1.47 | 1.84 | 2.21 | 2.76 | 3.31 | 3.86 | 4.41 |
| 5000 | 2.76 | 3.68 | 5.52 | 7.36 | 9.20 | 11.03 | 13.79 | 16.55 | 19.31 | 22.07 |
| 10000 | 5.52 | 7.36 | 11.03 | 14.71 | 18.39 | 22.07 | 27.58 | 33.10 | 38.62 | 44.14 |

FORMULA: $L = \frac{SD\sqrt{P}}{133,200}$

Where:
L = Allowable Leakage (gal./hr.)
S = Length of pipe tested in feet.
D = Nominal pipe diameter in inches.
P = Text pressure (150 psi)

When testing against closed metal-seated valves, an additional leakage per closed valve of 0.0078 gal./hr./in. of nominal valve size will be allowed.

These calculations are based on "AWWA C-600" Specifications, Section 4, Hydrostatic Testing, Dated April 29, 1982.

| CITY OF COLUMBUS<br>DEPARTMENT OF PUBLIC UTILITIES<br>DIVISION OF WATER | STANDARD DETAIL<br>ALLOWABLE LEAKAGE TABLE | L-6640 |
|---|---|---|
| APPROVED: Jeff Dullard<br>ENGINEER 4/1/01 DATE | | |

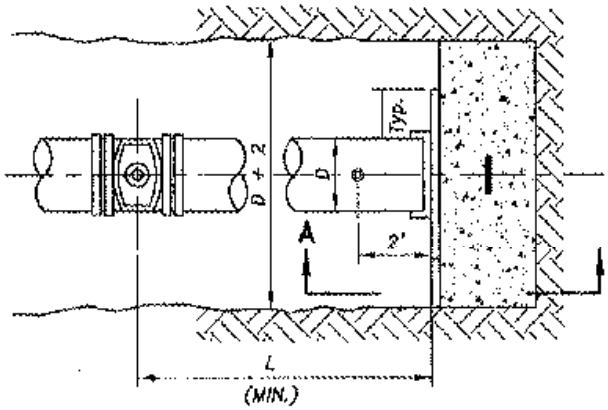


PLAN VIEW

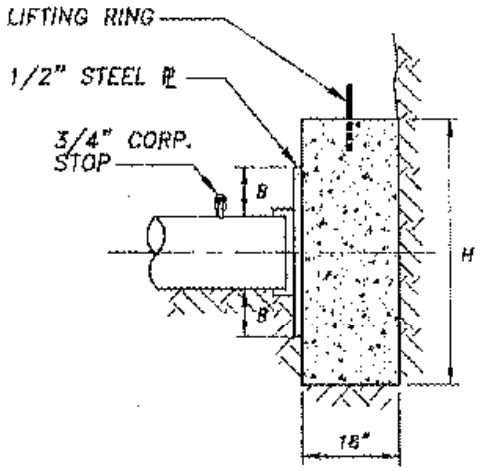


SECTION A–A

| PIPE DIAMETER | H | B | L | VOLUME CU-FT |
|---|---|---|---|---|
| 3" | 5" | 1" | 10' | 1.43 |
| 4" | 6" | 1" | 10' | 1.76 |
| 6" | 8" | 1" | 10' | 2.52 |
| 8" | 12" | 1" | 10' | 4.00 |
| 12" | 23" | 3" | 18' | 8.64 |
| 16" | 37" | 3" | 18' | 15.39 |

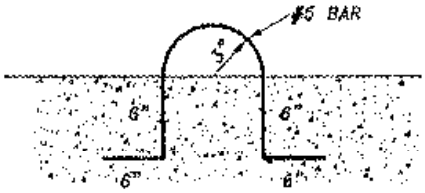


LIFT RING DETAIL

## NOTE:

1. BACKER DESIGNED FOR 3000 PSF SOIL BEARING.
2. END OF PIPE CAPPED OR PLUGGED.
3. GREASE STEEL PLATE WHERE IN CONTACT WITH CONCRETE BACKER.
4. PLACE CONCRETE AGAINST UNDISTURBED SOIL.
5. THOROUGHLY COMPACT BACKFILL BETWEEN VALVE AND END OF PIPE.

| CITY OF COLUMBUS DEPARTMENT OF PUBLIC UTILITIES DIVISION OF WATER | STANDARD DETAIL THRUST BLOCK DETAIL END OF PIPE | L-7001 |
|---|---|---|
| APPROVED: ENGINEER 4/1/61 DATE | | |

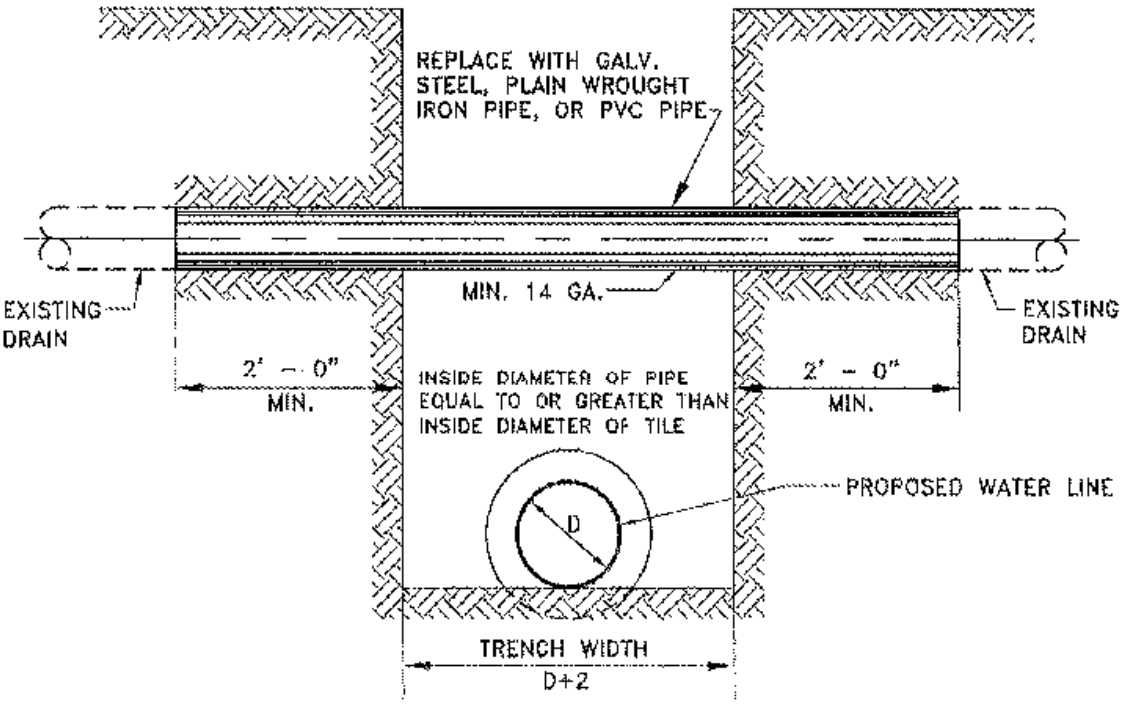


| CITY OF COLUMBUS DEPARTMENT OF PUBLIC UTILITIES DIVISION OF WATER | STANDARD DETAIL DRAIN TILE REPLACMENT | L-7002 |
|---|---|---|
| APPROVED: Geoff Wallard ENGINEER 4/1/01 DATE | | |

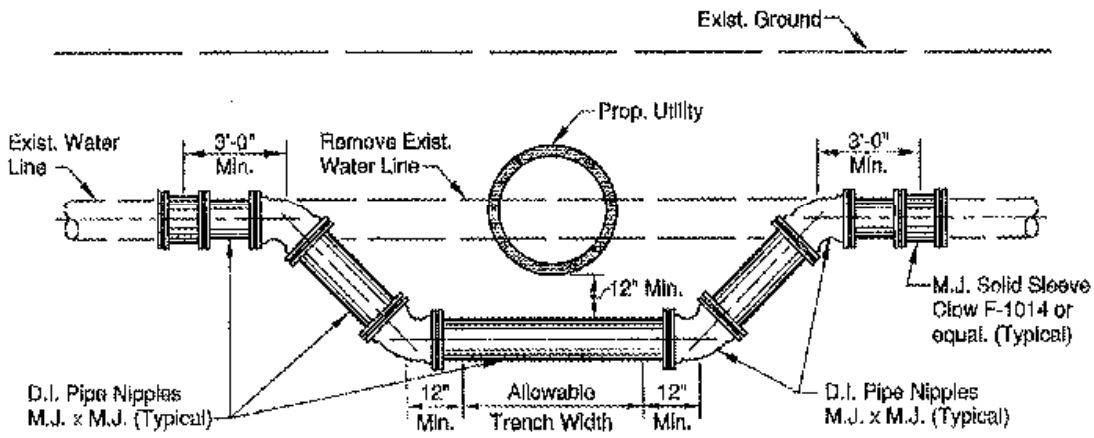


1. Time and duration of shut down shall be determined by the Administrator, Division of Water.

2. The contractor shall notify all water customers effected by the proposed work At least 24 hours in advance to shut down.

3. All bends shall be secured by retaining glands, rodding or other methods as approved by the Engineer to restore main to service as soon as possible. Concrete backing shall then be provided in accordance with Standard Detail L-6310 for over bends and L-6311 for sag bends.

4. The relocated lines shall be laid to the new line and grade, tested and disinfected prior to shut down of existing main and connection of the relocated lines to the existing main.

5. All water lines shall be disinfected by swabbing with a 5 per cent Hypochlorite solution in accordance with the applicable sections of A.W.W.A. C-601.

| CITY OF COLUMBUS<br>DEPARTMENT OF PUBLIC UTILITIES<br>DIVISION OF WATER | STANDARD DETAIL<br>TYPICAL WATER LINE LOWERING | L-7401 |
|---|---|---|
| APPROVED: [signature] 4/1/01<br>ENGINEER DATE | | |

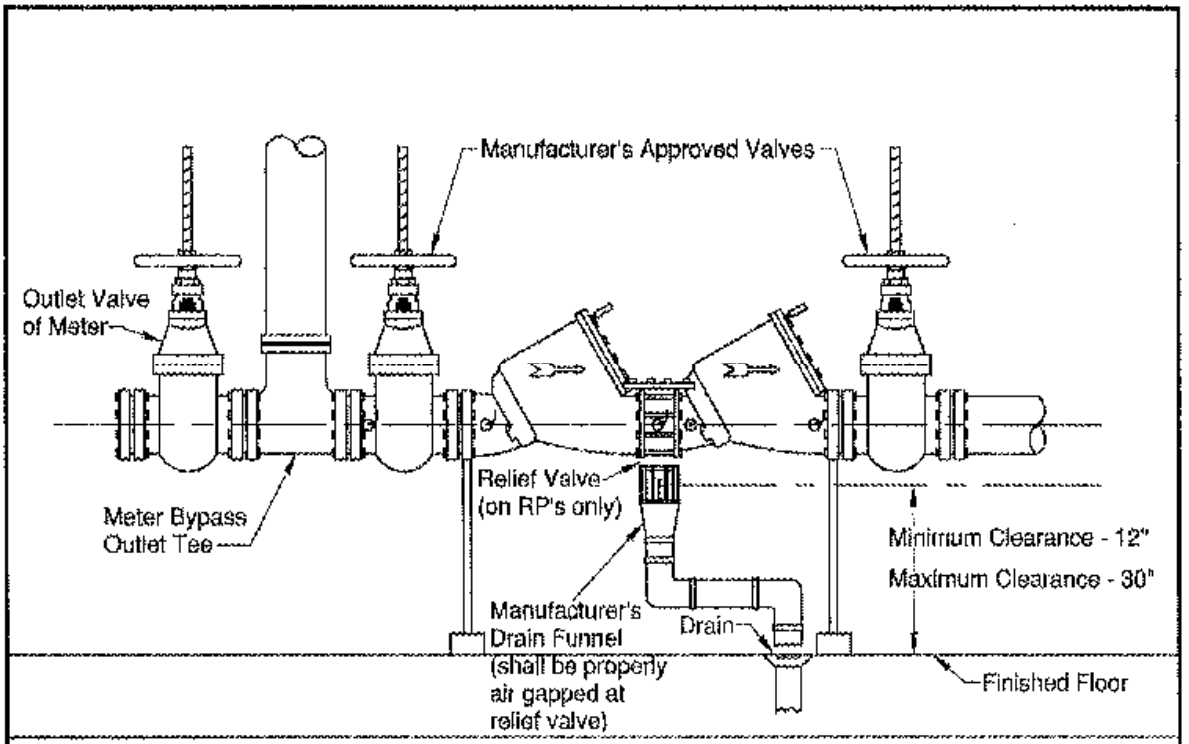


ATTACHED SET OF INSTALLATION RULES L-9002B ACCOMPANY THIS DRAWING.

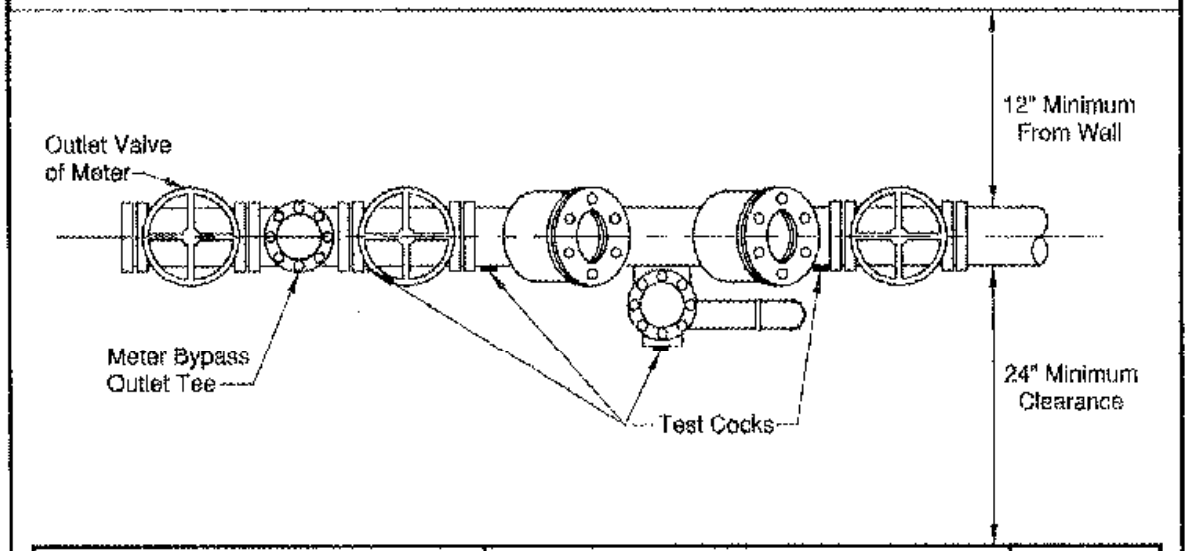


| CITY OF COLUMBUS DEPARTMENT OF PUBLIC UTILITIES DIVISION OF WATER | STANDARD DETAIL BACKFLOW PREVENTER SETTING FOR DOUBLE CHECK & REDUCED PRESSURE ASSEMBLIES | L-9002A |
|---|---|---|
| APPROVED: ENGINEER 4/2/01 DATE | | |

Backflow prevention assemblies shall be installed so that the inlet shut-off valve of the backflow preventor is the next piped fitting (including piping) after the water meter, except where a meter bypass, limited area fire system or strainer is needed.

Where the meter is located in the pit and the backflow preventor has been approved to be installed in the building, the backflow assembly inlet valve shall be twelve (12) inches from the wall or immediately after the ninety degree bend where the supply enters from the floor.

All assemblies are to be installed in a horizontal orientation.

Minimum and maximum ground clearance is measured from the floor to the lowest part of the assembly.

Each installation shall include properly located test cocks and manufacturer approved tightly closing shutoff valves.

No Backflow Prevention Assembly shall be subject to excessive heat or freezing.

It is recommended that a floor drain be installed as close as possible to the Assembly.

Reduced Pressure Principal Backflow Assemblies shall not be installed in a pit, vault or any area subject to flooding and shall always have an approved Air Gap Assembly.

Pressure Vacuum Breakers shall never be subject to back pressure and must be installed a minimum of 12" above the highest downstream discharge.

Lawn Irrigation Systems shall not have any outside exposed tees, drains or hose bibbs.

Backflow Prevention Assemblies shall prevent the release of on-site pressure to the public distribution water system. Therefore, internal compensation in accordance with the Ohio Plumbing Code shall be considered and made when needed, to relieve any excessive increase in on-site pressure due to hot water heating systems or other heat sources.

No Backflow Prevention Assembly shall be bypassed unless the bypass line contains equal backflow protection and the approval of the Division of Water.

NOTE: If there is a reason any of these criteria cannot be met, you will need to contact the Backflow Prevention Office at 645-6674.

| CITY OF COLUMBUS<br>DEPARTMENT OF PUBLIC UTILITIES<br>DIVISION OF WATER<br>APPROVED: Jeff Hubbard 9/1/01<br>ENGINEER DATE | STANDARD DETAIL<br>BACKFLOW PREVENTER SETTING<br>INSTALLATION RULES | L-9002B |
|---|---|---|

L-9002b.DWG

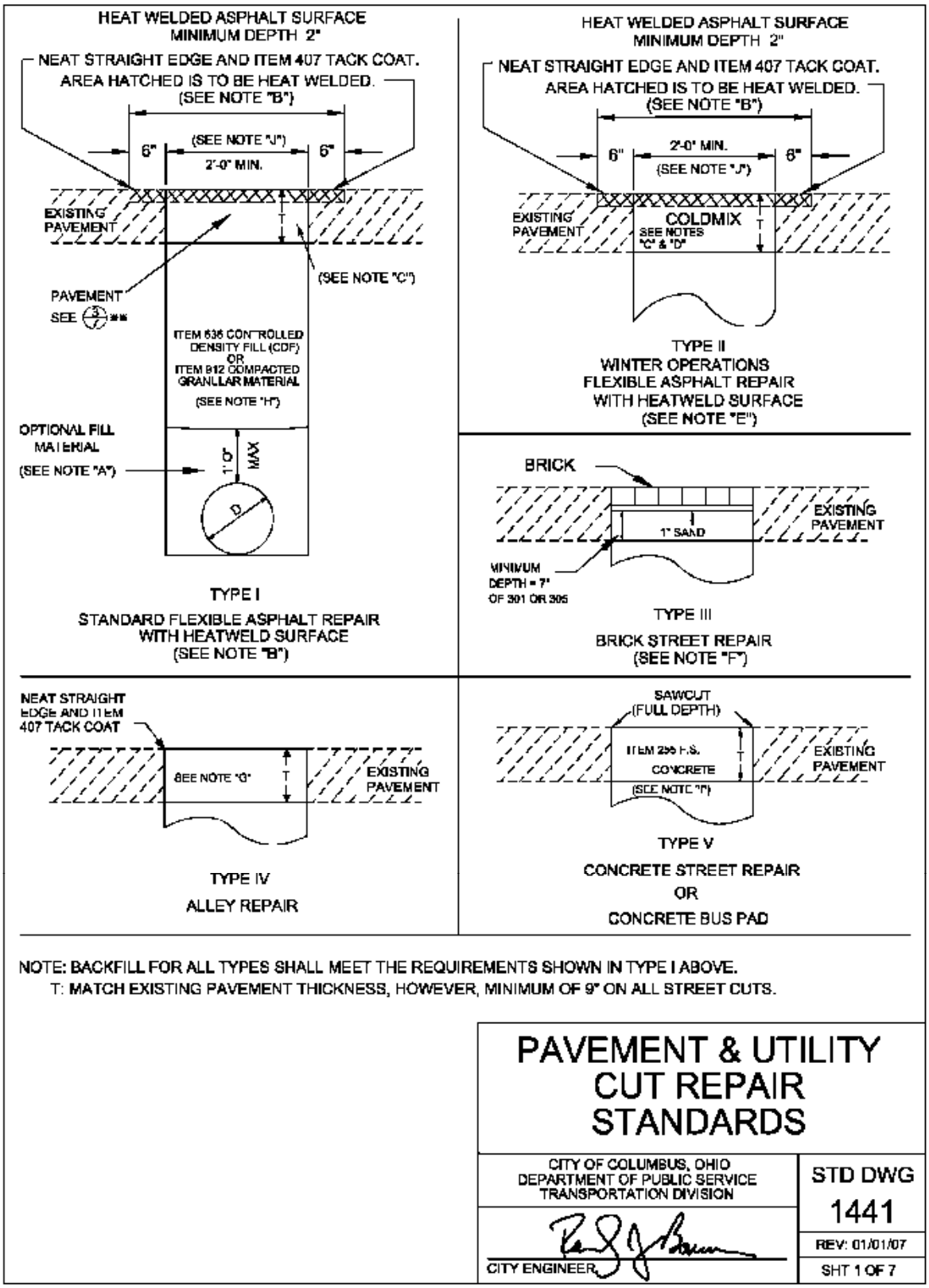
HEAT WELDED ASPHALT SURFACE
MINIMUM DEPTH 2"
NEAT STRAIGHT EDGE AND ITEM 407 TACK COAT.
AREA HATCHED IS TO BE HEAT WELDED.
(SEE NOTE "B")
(SEE NOTE "J")
6"
2'-0" MIN.
6"
EXISTING PAVEMENT
T
(SEE NOTE "C")
PAVEMENT
SEE
ITEM 636 CONTROLLED DENSITY FILL (CDF)
OR
ITEM 912 COMPACTED GRANULAR MATERIAL
(SEE NOTE "H")
OPTIONAL FILL MATERIAL
(SEE NOTE "A")
1'-0" MAX
D
TYPE I
STANDARD FLEXIBLE ASPHALT REPAIR
WITH HEATWELD SURFACE
(SEE NOTE "B")
HEAT WELDED ASPHALT SURFACE
MINIMUM DEPTH 2"
NEAT STRAIGHT EDGE AND ITEM 407 TACK COAT.
AREA HATCHED IS TO BE HEAT WELDED.
(SEE NOTE "B")
6"
2'-0" MIN.
(SEE NOTE "J")
6"
EXISTING PAVEMENT
COLDMIX
SEE NOTES "C" & "D"
T
TYPE II
WINTER OPERATIONS
FLEXIBLE ASPHALT REPAIR
WITH HEATWELD SURFACE
(SEE NOTE "E")
BRICK
EXISTING PAVEMENT
1" SAND
MINIMUM DEPTH = 7" OF 301 OR 305
TYPE III
BRICK STREET REPAIR
(SEE NOTE "F")
NEAT STRAIGHT EDGE AND ITEM 407 TACK COAT
SEE NOTE "G"
T
EXISTING PAVEMENT
TYPE IV
ALLEY REPAIR
SAWCUT
(FULL DEPTH)
ITEM 256 P.S.
CONCRETE
(SEE NOTE "I")
T
EXISTING PAVEMENT
TYPE V
CONCRETE STREET REPAIR
OR
CONCRETE BUS PAD
NOTE: BACKFILL FOR ALL TYPES SHALL MEET THE REQUIREMENTS SHOWN IN TYPE I ABOVE.
T: MATCH EXISTING PAVEMENT THICKNESS, HOWEVER, MINIMUM OF 9" ON ALL STREET CUTS.
PAVEMENT & UTILITY
CUT REPAIR
STANDARDS
CITY OF COLUMBUS, OHIO
DEPARTMENT OF PUBLIC SERVICE
TRANSPORTATION DIVISION
CITY ENGINEER
STD DWG
1441
REV: 01/01/07
SHT 1 OF 7

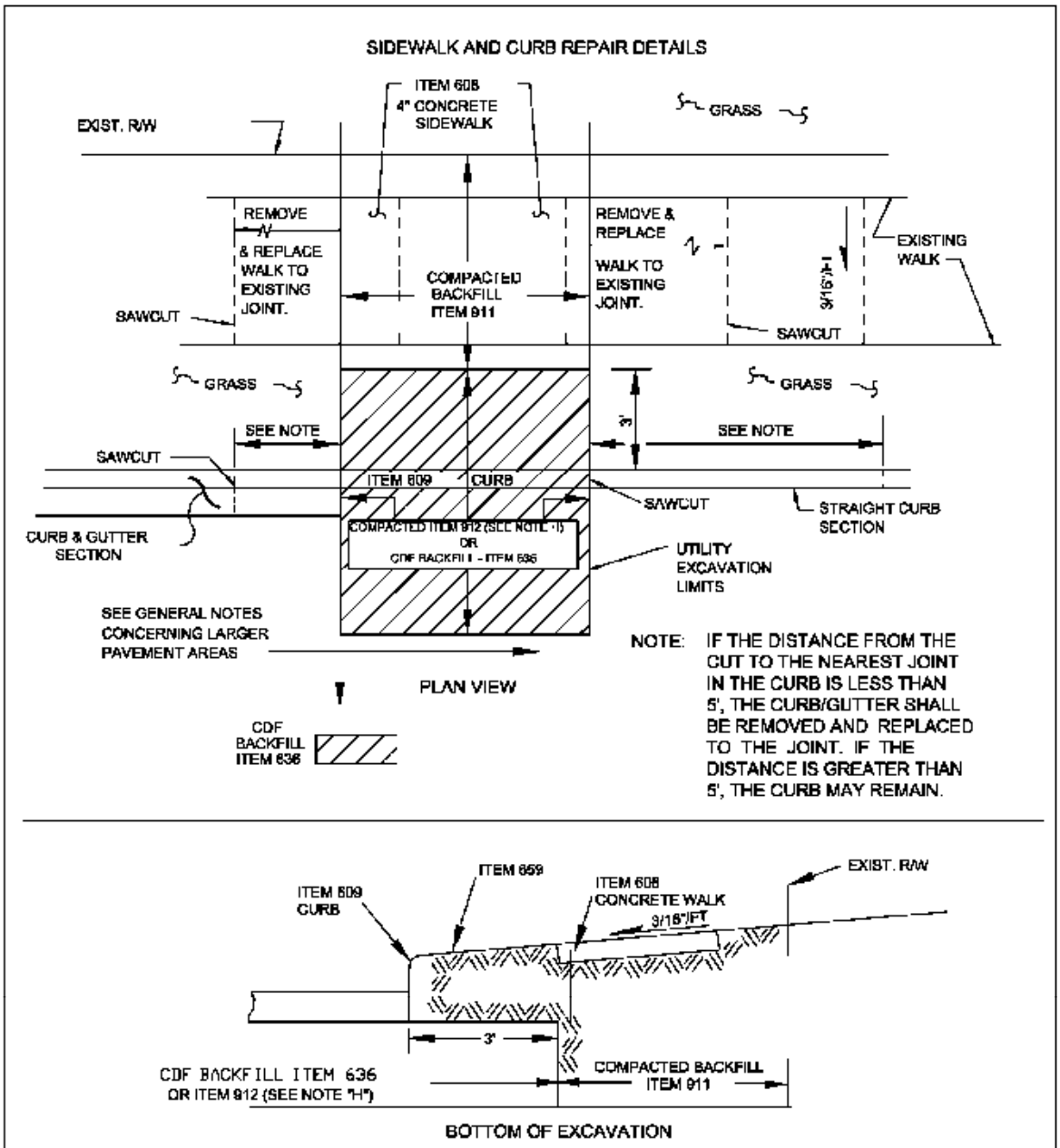


ALL GRASS AREAS SHALL BE SEEDED IN ACCORDANCE WITH ITEM 659 SEEDING AND MULCHING.

IN RESIDENTIAL AREAS WITH ESTABLISHED LAWNS, SOD SHALL BE PLACED RATHER THAN SEEDING.

# PAVEMENT & UTILITY CUT REPAIR STANDARDS

CITY OF COLUMBUS, OHIO
DEPARTMENT OF PUBLIC SERVICE
TRANSPORTATION DIVISION

STD DWG
1441
REV: 01/01/07
SHT 2 OF 7

GENERAL NOTES

EXCAVATION PERMIT REQUIRED: A CITY OF COLUMBUS STREET EXCAVATION PERMIT IS REQUIRED FOR ALL EXCAVATIONS WITHIN THE PUBLIC RIGHT-OF-WAY, AS SET FORTH BY COLUMBUS CITY CODE, CHAPTER 903 AND ISSUED IN ACCORDANCE WITH PROVISIONS IN THE GENERAL RULES AND REGULATIONS OF THE TRANSPORTATION DIVISION.

SCOPE OF WORK

THIS WORK SHALL CONSIST OF PAVEMENT REMOVAL, NECESSARY EXCAVATION, AND PAVEMENT REPLACEMENT IN ACCORDANCE WITH THE DETAILS SHOWN HEREIN. ALL WORK AND MATERIALS SHALL CONFORM TO THE REQUIREMENTS OF THE CURRENT CITY OF COLUMBUS CONSTRUCTION AND MATERIALS SPECIFICATION (CCMS).

PROCEDURES USED FOR THE PAVEMENT REMOVAL AND REPLACEMENT SHALL NOT CAUSE SPALLING OR CRACKING OF ADJACENT PAVEMENT.

WHEN THE PAVEMENT IS REMOVED AND THE CONTRACTOR IS UNABLE TO COMPLETE THE REQUIRED REPLACEMENT IN TIME FOR IT TO BE OPENED TO TRAFFIC AS INDICATED ON THE PERMIT, THE EXCAVATION SHALL BE FILLED WITH A BITUMINOUS PATCH MATERIAL WITH A DURABLE SURFACE OR PROPERLY PLATED. (AS PER CITY CODE CHAPTER 903 &/OR SHEET 7 OF THIS STANDARD DRAWING) THE CONTRACTOR WILL BE REQUIRED TO MAINTAIN THESE PATCHES WHILE THEY ARE IN SERVICE. THE COST OF PLACING, MAINTAINING, AND REMOVING AND DISPOSING OF THE TEMPORARY PATCHES OR PLATES WILL BE AT THE CONTRACTOR'S EXPENSE.

WHEN ITEM 636 FCDF IS USED AS A BACKFILL, NO PAVEMENT SHALL BE PLACED UNTIL BLEED WATER HAS BEEN EVAPORATED FROM THE FCDF SURFACE OR HAS BEEN DRAINED OR REMOVED FROM THE SURFACE.

THE BACKFILLING PAVEMENT REPAIR AND/OR HEAT WELDING SHALL BE DONE BY THE CONTRACTOR OR PERMITEE IN ACCORDANCE WITH CITY SPECIFICATIONS. IF DESIRED, ANY OR ALL OF THIS WORK CAN BE PERFORMED BY THE CITY OF COLUMBUS. THE CITY SHALL COLLECT APPROPRIATE FEES AT THE TIME THE PERMIT IS ISSUED FOR SAID WORK.

RESTORATION OF ANY SIDEWALK, CURB, STREET PAVEMENT, ETC., SHALL OCCUR NO LATER THAN 30 DAYS AFTER CONCLUSION OF ANY UTILITY REPAIR OR INSTALLATION ACTIVITY. CONSTRUCTION ACTIVITY COMPLETED DECEMBER THROUGH APRIL SHALL BE RESOLVED NO LATER THAN MAY 31ST. ADDITIONAL PERMITS SHALL NOT BE ISSUED UNTIL THE VIOLATIONS ARE CORRECTED TO THE SATISFACTION OF THE CITY ENGINEER. IN ADDITION, EACH VIOLATION MAY BE DEALT WITH IN ACCORDANCE WITH SECTION 903.99 OF THE COLUMBUS CITY CODE.

** PAVING STANDARDS FOR LARGE TRENCHES OR PAVING AREAS

A SMALL LATERAL TRENCH CUT OR SMALL PAVEMENT AREA SHALL BE DEFINED AS 5 FT OR LESS IN WIDTH AND/OR NO GREATER THAN 100 FT IN LENGTH. WHEN REPAIR AREAS EXCEED ONE OR BOTH OF THESE DIMENSIONS, THE PAVEMENT REPAIR SECTION SHALL CONFORM TO 2 INCHES OF ITEM 404 ASPHALT CONCRETE ON EITHER 7 INCHES OF ITEM 301 BITUMINOUS AGGREGATE BASE OR ITEM 305 PORTLAND CEMENT CONCRETE BASE. OTHERWISE PLANS SHOULD REFLECT REPLACEMENT OF THE PAVEMENT IN ACCORDANCE WITH CITY STANDARD TYPICAL SECTIONS AND ARE SUBJECT TO APPROVAL BY THE TRANSPORTATION DIVISION.

| | |
|---|---|
| PAVEMENT & UTILITY CUT REPAIR STANDARDS | |
| CITY OF COLUMBUS, OHIO<br>DEPARTMENT OF PUBLIC SERVICE<br>TRANSPORTATION DIVISION | STD DWG<br>1441<br>REV: 01/01/07<br>SHT 3 OF 7 |

WHEN A TRENCH EXCEEDS 100 FT IN LENGTH, THE REPAIR SHALL INCLUDE PLANING A FULL LANE WIDTH (OR ANY OTHER LANE WIDTH AS DIRECTED BY THE TRANSPORTATION DIVISION) TO A DEPTH OF 1 ¼ INCHES FOR THE ENTIRE LENGTH OF THE TRENCH. THE PLANED AREA SHALL THEN BE REPAVED WITH A PAVER IN ACCORDANCE WITH CURRENT CITY STANDARD SPECIFICATIONS. ITEM 413 CRACK SEALING SHALL BE APPLIED TO EXPOSED JOINTS ONCE THE PAVING OPERATION HAS BEEN COMPLETED.

WHEN TRENCHING WORK CROSSES LANES, ALL AFFECTED LANES SHALL REQUIRE PLANING AND RESURFACING AS DESCRIBED ABOVE. THIS WORK SHALL INCLUDE ALL OF THE AFFECTED PAVEMENT AREA.

SPECIAL NOTES

NOTE 'A' : WHEN USING CONTROLLED DENSITY FILL (CDF), THE OPTIONAL FILL AREA OVER THE CONDUIT MAY BE BACKFILLED WITH SAND, GRANULAR MATERIAL, OR OTHER SUITABLE 912 MATERIAL, FOR A DISTANCE NOT TO EXCEED 1 FT. A PROTECTIVE BARRIER OF VISQUEEN OR SIMILAR MATERIAL IS PERMITTED.

NOTE 'B' : FOR TYPE I AND TYPE II CUT REPAIRS, THE AREA TO BE HEAT WELDED IS TO INCLUDE THE CUT AND EXTEND FOR 6 INCHES BEYOND EACH SIDE OF THE CUT FOR A NOMINAL DEPTH OF 2 INCHES.

NOTE 'C' : FOR TYPE I AND TYPE II PAVEMENT REPAIR, THE ITEM 404 HOT ASPHALT OR COLD MIX SHALL BE PLACED IN LIFTS NOT EXCEEDING 3 INCHES AND COMPACTED WITH A COMBINATION VIBRATORY PLATE COMPACTOR, OR A VIBRATORY STEEL WHEELED ROLLER WITH A MINIMUM CERTIFIED FORCE OF 2000 POUNDS. IN ALL CASES THE SURFACE LIFT SHALL BE COMPACTED WITH THE VIBRATORY STEEL WHEELED ROLLER. WHEN PLACING HCM COLD MIX FULL DEPTH, MATERIAL TEMPERATURE SHALL BE 70 DEGREES OR ABOVE.

NOTE 'D' : COLD MIX SHALL BE HCM COLD MIX OR OTHER COLD MIX APPROVED BY THE CITY OF COLUMBUS. IN LIEU OF COLD MIX, THE CONTRACTOR MAY STOCKPILE 404 ASPHALT AND REHEAT IT TO PLACE IN CUT AS PAVEMENT REPAIR. TYPE II PAVEMENT REPLACEMENT SHALL CONSIST OF FULL DEPTH HPM COLD MIX FOR SMALL EXCAVATIONS. LARGE EXCAVATIONS SHALL REQUIRE A MINIMUM OF 7 INCHES OF FAST SETTING PORTLAND CEMENT AND 2 INCHED OF HPM COLD MIX.

NOTE 'E' : THE COLD MIX IS TO BE REPLACED WITH ITEM 404 ASPHALT WHICH IS TO BE HEAT WELDED AS SET FORTH IN NOTE 'B'. THIS WORK SHALL BE PERFORMED AS SOON AS ASPHALT IS AVAILABLE.

| PAVEMENT & UTILITY CUT REPAIR STANDARDS | |
|---|---|
| CITY OF COLUMBUS, OHIO<br>DEPARTMENT OF PUBLIC SERVICE<br>TRANSPORTATION DIVISION | STD DWG<br>1441<br>REV: 01/01/07<br>SHT 4 OF 7 |

NOTE 'F' : REPAIR OF BRICK STREETS

1. BRICKS REMOVED FROM A REPAIR AREA SHALL BE STORED IN A SAFE PLACE BY THE CONTRACTOR FOR REUSE. THE CONTRACTOR WILL BE RESPONSIBLE FOR REPLACING ANY BRICKS THAT ARE STOLEN OR DAMAGED, AT NO ADDITIONAL COST TO THE CITY.

2. BRICKS MAY BE PURCHASED FROM THE CITY AT A NOMINAL COST TO THE CONTRACTOR. IF BRICKS ARE SUPPLIED BY THE CONTRACTOR, THEY MUST FIRST BE APPROVED BY THE CITY BEFORE THEY ARE USED.

3. SAW CUTTING: ALL PARTIAL BRICKS SHALL BE SAWCUT. FURTHER, NO BRICK WILL BE PERMITTED TO BE CUT, FOR REPLACEMENT, TO A LENGTH LESS THAN $\frac{1}{2}$ ITS ORIGINAL LENGTH. THIS MAY REQUIRE SAW CUTTING OF ADJACENT UNDISTURBED BRICK(S).

4. THE PERIMETER FACES OF THE EXISTING BASE MATERIAL SHALL BE CUT BACK TO AS NEARLY VERTICAL ORIENTATION AS POSSIBLE. IF SHEARING OF THE ADJACENT BASE RESULTS, THE CONTRACTOR WILL BE PAID FOR THE ADDITIONAL AREAS OF REMOVAL AS DESCRIBED ON THE ATTACHED DETAIL SHEET.

5. THE MAXIMUM WIDTH OF A BRICK MORTAR JOINT SHALL BE $\frac{1}{2}$ INCH. THIS RESTRICTION SHALL ALSO APPLY TO THE JOINT FORMED ADJACENT TO THE PERIMETER OF A REPAIR AREA, WHERE THE ROWS MAY NOT BE PARALLEL TO ONE ANOTHER.

6. MORTARING OF JOINTS: ALL JOINTS SHALL BE MORTARED WITH A 50/50 MIXTURE BY VOLUME OF SAND AND CEMENT SO AS TO PROVIDE A FLUSH FINISH. THIS MAY REQUIRE MORE THAN ONE APPLICATION. FURTHER, MECHANICAL VIBRATION WILL BE REQUIRED FOR CONSOLIDATION OF DRY MORTAR MIX.

7. ALLOWABLE BASE MATERIAL SHALL BE DETERMINED BY THE TRENCH SIZE AS APPLICABLE FOR SMALL OR LARGE EXCAVATIONS, AS AS SPECIFIED ON PAGE 3 OF 7.

NOTE 'G' : FOR ALLEY REPAIRS, THE PROPOSED PAVEMENT REPLACEMENT SHALL CONFORM TO THE EXISTING TYPE AND THICKNESS OF THE PAVEMENT. CHIP AND SEAL TYPE ALLEYS SHALL REQUIRE MATCHING THE EXISTING THICKNESS OF PAVEMENT WITH THE APPROPRIATE COMBINATION OF MATERIALS BASED ON THE SIZE OF THE EXCAVATION. THE MINIMUM SHALL CONSIST OF 3 INCHES OF ITEM 404 ASPHALT CONCRETE. FINISH CONCRETE PAVEMENT IS NOT PERMITTED. MATERIALS USED SHALL CONFORM TO THE REQUIREMENT OF THE CURRENT CCMS.

IF MORE THAN $\frac{1}{3}$ OF THE WIDTH OF AN ALLEY IS REMOVED, THE PAVEMENT SHALL BE REPLACED AS PER TYPICAL AND THEN OVERLAYED OVER THE TOTAL WIDTH OF PAVEMENT AND LENGTH OF TRENCH.

| PAVEMENT & UTILITY CUT REPAIR STANDARDS | |
|---|---|
| CITY OF COLUMBUS, OHIO<br>DEPARTMENT OF PUBLIC SERVICE<br>TRANSPORTATION DIVISION | STD DWG<br>1441<br>REV: 01/01/07<br>SHT 5 OF 7 |

NOTE 'H' : ITEM 912 - COMPACTED GRANULAR BACKFILL:
THIS METHOD OF BACKFILL CAN ONLY BE USED WITH FULL TIME CITY INSPECTION. AN INSPECTION FEE MUST BE POSTED WHEN THE PERMIT IS ISSUED.

NOTE 'I' : CONCRETE BASE OR PAVEMENT
IF PAVING REQUIREMENTS ALLOW FOR SUFFICIENT CURING TIME SO THAT FAST SETTING CONCRETE IS NOT NEEDED, STANDARD CONCRETE BASE OR PAVEMENT MAY BE PLACED AS PER THE CCMS. THIS OPTION MUST BE NOTED ON THE PERMIT APPLICATION AND APPROVED BY THE CITY OF COLUMBUS.

NOTE 'J' : THE TRENCH WIDTH FOR SMALL PIPES AND CONDUITS SHALL BE OF SUFFICIENT WIDTH TO ALLOW FOR THE PROPER PLACEMENT OF THE BACKFILL MATERIAL. THE PAVEMENT PORTION OF THE TRENCH SHALL BE A MINIMUM OF 2 FT IN WIDTH. THIS IS TO ALLOW FOR THE PROPER COMPACTION OF THE ASPHALT PAVEMENT. IF THE TRENCH FOR PLACING CONDUIT IS NARROWER THAN 2 FT THEN THE PAVEMENT PORTION SHALL BE CUT BACK TO PROVIDE THE 2 FT MINIMUM FOR PAVING OPERATIONS.

| | |
|---|---|
| PAVEMENT & UTILITY CUT REPAIR STANDARDS | |
| CITY OF COLUMBUS, OHIO<br>DEPARTMENT OF PUBLIC SERVICE<br>TRANSPORTATION DIVISION | STD DWG<br>1441<br>REV: 01/01/07<br>SHT 6 OF 7 |

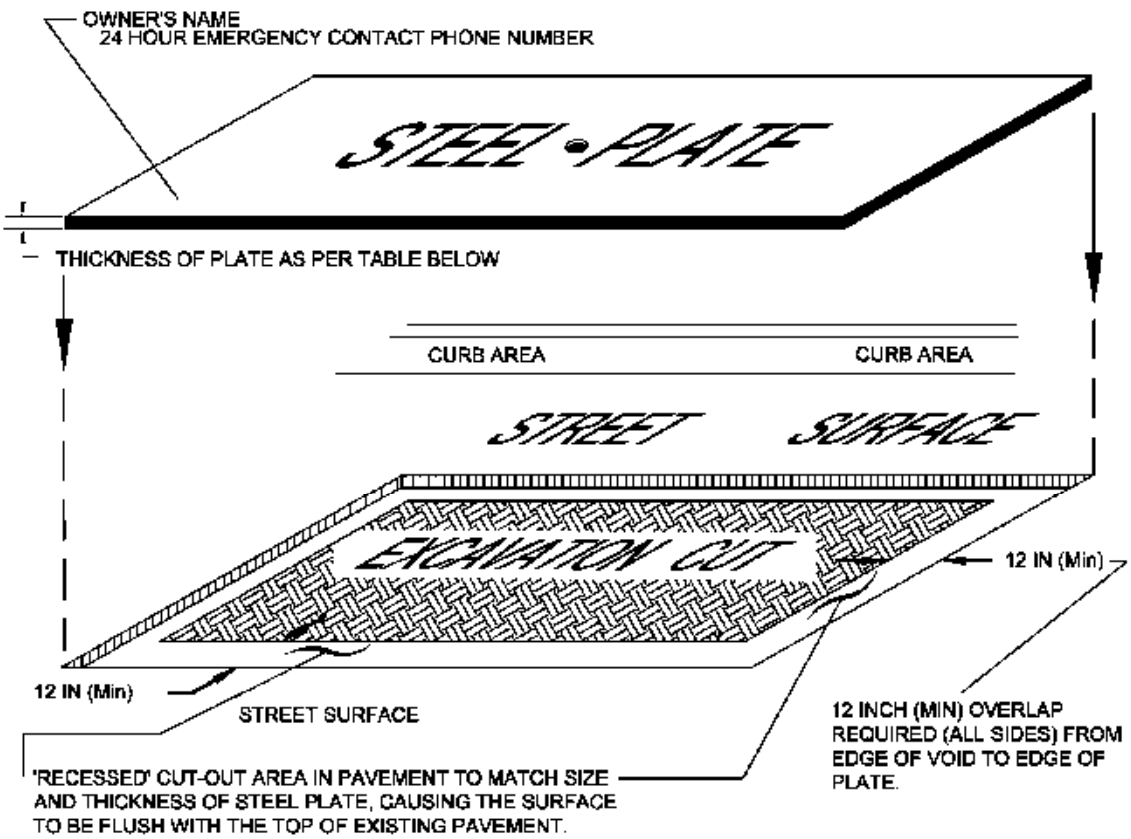


THIS DRAWING ONLY APPLIES TO BITUMINOUS ASPHALT SURFACED STREETS

NOTE: ALL STEEL PLATES MUST HAVE THE FOLLOWING INFORMATION CLEARLY AND LEGIBLY 'ETCHED' INTO THEIR TOP SURFACE:

1 OWNERS NAME
2 A 24 HR. EMERGENCY CONTACT PHONE NUMBER.

| MINIMUM THICKNESS OF STEEL PLATES | |
|---|---|
| SIZE OF PLATE | THICKNESS |
| 4 FT x 4 FT | 1/2 INCH |
| 4 FT x 6 FT | 3/4 INCH |
| LARGER | 1 INCH |

# STEEL PLATE REQUIREMENTS

CITY OF COLUMBUS, OHIO
DEPARTMENT OF PUBLIC SERVICE
TRANSPORTATION DIVISION

STD DWG
1441
REV: 01/01/07
SHT 7 OF 7

END OF SECTION 33 10 00

# SECTION 33 30 00 - SANITARY SEWERAGE UTILITIES

## PART 1 - GENERAL

### 1.1 RELATED DOCUMENTS

A. Drawings and general provisions of the Contract, including General and Supplementary Conditions and Division 1 Specification Sections, apply to this Section. Materials and installation shall comply with City of Columbus Division of Sewerage and Drainage requirements, standard drawings, and specifications.

### 1.2 SUMMARY

A. This Section includes sanitary sewerage outside the building.

B. Related Sections include the following:
   1. Division 3 Section "Cast-in-Place Concrete" for concrete structures.

### 1.3 DEFINITIONS

A. ABS: Acrylonitrile-butadiene-styrene plastic.

B. EPDM: Ethylene-propylene-diene-monomer rubber.

C. PE: Polyethylene plastic.

D. PVC: Polyvinyl chloride plastic.

### 1.4 PERFORMANCE REQUIREMENTS

A. Gravity-Flow, Non-pressure-Piping Pressure Ratings: At least equal to system test pressure.

B. Force-Main Pressure Ratings: At least equal to system operating pressure, but not less than 150 psig

### 1.5 QUALITY ASSURANCE

A. Environmental Agency Compliance: Comply with regulations pertaining to sanitary sewer systems.

B. Utility Compliance: Comply with regulations pertaining to sanitary sewer systems.

## 1.6 SUBMITTALS

A. Product Data: For the following:

1. Stainless-steel drainage systems.
2. Backwater valves and cleanouts.
3. Manhole cover inserts.

B. Shop Drawings: Include plans, elevations, details, and attachments for the following:

1. Precast concrete manholes, including frames and covers.

2. Pipe materials including wyes and fittings.

C. Coordination Drawings: Show manholes and other structures, pipe sizes, locations, and elevations. Include details of underground structures and connections. Show other piping in same trench and clearances from sewerage system piping. Indicate interface and spatial relationship between piping and proximate structures.

D. Coordination Profile Drawings: If profiles are not shown on the construction documents, show system piping in elevation; horizontal scale of not less than 1 inch equals 50 feet and vertical scale of not less than 1 inch equals 5 feet. Indicate underground structures and pipe. Show types, sizes, materials, and elevations of other utilities crossing system piping.

E. Design Mix Reports and Calculations: For each class of cast-in-place concrete.

F. Field Test Reports: Indicate and interpret test results for compliance with performance requirements.

## 1.7 DELIVERY, STORAGE, AND HANDLING

A. Do not store plastic structures, pipe, and fittings in direct sunlight, and protect pipe, fittings, and seals from dirt and damage.

B. Handle precast concrete manholes and other structures according to manufacturer's written rigging instructions.

## 1.8 PROJECT CONDITIONS

A. Site Information: Perform site survey, research public utility records, and verify existing utility locations.

B. Locate existing structures and piping to be closed and abandoned.

C. Existing Utilities: Do not interrupt utilities serving facilities occupied by Owner or others unless permitted under the following conditions and then only after arranging to provide temporary utility services according to requirements indicated:

1. Notify Architect not less than two days in advance of proposed utility interruptions.

2. Do not proceed with utility interruptions without Architect's written permission.

## PART 2 - PRODUCTS

### 2.1 MANUFACTURERS

A. Available Manufacturers: Subject to compliance with requirements, manufacturers offering products that may be incorporated into the Work include, but are not limited to, the following:

B. Manufacturers: Subject to compliance with requirements, provide products by one of the following:

1. Gray-Iron Backwater Valves and Cleanouts:

   a. Josam Co.
   b. McWane, Inc.; Tyler Pipe; Wade Div.
   c. Smith: Jay R. Smith Mfg. Co.
   d. Watts Industries, Inc.; Ancon Drain Div.
   e. Watts Industries, Inc.; Enpoco, Inc. Div.
   f. Zurn Industries, Inc.; Hydromechanics Div.

2. PVC Backwater Valves and Cleanouts:

   a. Canplas, Inc.
   b. IPS Corp.
   c. NDS, Inc.
   d. Plastic Oddities, Inc.
   e. Sioux Chief Manufacturing Co., Inc.

3. Manhole Cover Inserts:

   a. FRW Industries, Inc.
   b. Knutson Manufacturing Co.
   c. Parson Environmental Products, Inc.
   d. LFM Manufacturing Inc.

4. Casing Pipe Spacers and End Boots
   a. Advanced Products & Systems
   b. Pipeline Seal and Insulator, Inc.
   c. Cascade Waterworks Manufacturing

### 2.2 PIPING MATERIALS

A. Refer to Part 3 "Piping Applications" Article for applications of pipe and fitting materials.

## 2.3 PIPES AND FITTINGS

A. PVC Sewer Pipe and Fittings: According to the following:

1. PVC Sewer Pipe and Fittings, NPS 15 and Smaller: ASTM D 3034, SDR 35, gasketed joints, ASTM D 3212, with cell classification of ASTM B or C 12454.

   a. Gaskets: ASTM F 477, elastomeric seals.

B. Extra-Strength Vitrified Clay Sewer Pipe and Fittings: According to the following: Extra-Strength Vitrified Clay Pipe and Fittings, ASTM C700, with joints conforming to ASTM C425. Gaskets shall be O-ring, compression type.

## 2.4 SPECIAL PIPE COUPLINGS AND FITTINGS

A. Sleeve-Type Pipe Couplings: ASTM C 1173, rubber or elastomeric sleeve and band assembly fabricated to mate with OD of pipes to be joined, for nonpressure joints.

1. Sleeve Material for Concrete Pipe: ASTM C 443 , rubber.
2. Sleeve Material for Cast-Iron Soil Pipe: ASTM C 564, rubber.
3. Sleeve Material for Plastic Pipe: ASTM F 477, elastomeric seal.
4. Sleeve Material for Dissimilar Pipe: Compatible with pipe materials being joined.
5. Bands: Stainless steel, at least one at each pipe insert.

B. Bushing-Type Pipe Couplings: ASTM C 1173, rubber or elastomeric bushing fabricated to mate with OD of smaller pipe and ID of adjoining larger pipe, for nonpressure joints.

1. Material for Concrete Pipe: ASTM C 443 (ASTM C 443M), rubber.
2. Material for Cast-Iron Soil Pipe: ASTM C 564, rubber.
3. Material for Plastic Pipe: ASTM F 477, elastomeric seal.
4. Material for Dissimilar Pipe: Compatible with pipe materials being joined.

C. Pressure-Type Pipe Couplings: AWWA C219, iron-body sleeve assembly matching OD of pipes to be joined, with AWWA C111 rubber gaskets, bolts, and nuts. Include PE film, pipe encasement.

D. Ductile-Iron, Flexible Expansion Joints: Compound fitting with combination of flanged and mechanical-joint ends complying with AWWA C110 or AWWA C153. Include two gasketed ball-joint sections and one or more gasketed sleeve sections, rated for 250-psig (1725-kPa) minimum working pressure and for offset and expansion indicated. Include PE film, pipe encasement.

E. Ductile-Iron Deflection Fittings: Compound coupling fitting with ball joint, flexing section, gaskets, and restrained-joint ends complying with AWWA C110 or AWWA C153. Include rating for 250-psig (1725-kPa) minimum working pressure and for up to 15 degrees deflection. Include PE film, pipe encasement.

F. Ductile-Iron Expansion Joints: Three-piece assembly of telescoping sleeve with gaskets and restrained-type, ductile-iron, bell-and-spigot end sections complying with AWWA C110 or

AWWA C153. Include rating for 250-psig (1725-kPa) minimum working pressure and for expansion indicated. Include PE film, pipe encasement.

## 2.5 PE FILM, PIPE ENCASEMENT

A. ASTM A 674 or AWWA C105; PE film, tube, or sheet; 8-mil thickness (for Ductile Iron Pipe only)

## 2.6 MANHOLES

A. Normal-Traffic Precast Concrete Manholes: ASTM C 478, precast, reinforced concrete, of depth indicated, with rubber gasketed joints.

1. Inside Diameter: 48 inches minimum, unless otherwise indicated.
2. Ballast: Increase thickness of precast concrete sections or add concrete to base section, as required to prevent flotation.
3. Base Section: 6-inch (150-mm) minimum thickness for floor slab and 4-inch (100-mm) minimum thickness for walls and base riser section, and having separate base slab or base section with integral floor.
4. Riser Sections: 4-inch (100-mm) minimum thickness, and lengths to provide depth indicated.
5. Top Section: Eccentric-cone type, unless concentric-cone or flat-slab-top type is indicated. Top of cone of size that matches grade rings.
6. Gaskets: ASTM C 443 (ASTM C 443M), rubber.
7. Grade Rings: Include no more than two reinforced-concrete rings, of 6 inch total thickness, that match 24-inch- diameter frame and cover.
8. Steps: Aluminum, individual steps. Include width that allows worker to place both feet on one step and is designed to prevent lateral slippage off step. Cast or anchor into base, riser, and top section sidewalls with steps at 12- to 16-inch (300- to 400-mm) intervals. Omit steps for manholes less than 60 inches deep.
9. Steps: ASTM C 478 individual steps or ladder. Omit steps for manholes less than 60 inches deep.
10. Pipe Connectors: ASTM C 923, resilient, of size required, for each pipe connecting to base section.

B. Manhole Frames and Covers: ASTM A 536, Grade 60-40-18, ductile-iron castings designed for heavy-duty service. Include 24-inch ID by 7- to 9-inch riser with 4-inch minimum width flange, and 26-inch- diameter cover. Include indented top design with lettering "SANITARY SEWER" cast into cover.

C. Manhole Cover Inserts: Manufactured, plastic form, of size to fit between manhole frame and cover and designed to prevent storm water inflow. Include handle for removal and gasket for gastight sealing.

1. Type: Solid.
2. Type: With drainage and vent holes.
3. Type: With valve.

## 2.7 CONCRETE

A. General: Cast-in-place concrete according to ACI 318, ACI 350R, and the following:

1. Cement: ASTM C 150, Type II.
2. Fine Aggregate: ASTM C 33, sand.
3. Coarse Aggregate: ASTM C 33, crushed gravel.
4. Water: Potable.

B. Portland Cement Design Mix: 4000 psi minimum, with 0.45 maximum water-cementitious materials ratio.

1. Reinforcement Fabric: ASTM A 185, steel, welded wire fabric, plain.
2. Reinforcement Bars: ASTM A 615/A 615M, Grade 60 , deformed steel.

C. Structure Channels and Benches: Factory or field formed from concrete. Portland cement design mix, 4000 psi minimum, with 0.45 maximum water-cementitious materials ratio. Include channels and benches in manholes.

1. Channels: Concrete invert, formed to same width as connected piping, with height of vertical sides to three-fourths of pipe diameter. Form curved channels with smooth, uniform radius and slope.

   a. Invert Slope: 1 percent through manhole.
   b. Invert Slope: 2 percent through manhole.

2. Benches: Concrete, sloped to drain into channel.

   a. Slope: 8 percent.
   b. Slope: 4 percent.

D. Ballast and Pipe Supports: Portland cement design mix, 3000 psi minimum, with 0.58 maximum water-cementitious materials ratio.

1. Reinforcement Fabric: ASTM A 185, steel, welded wire fabric, plain.
2. Reinforcement Bars: ASTM A 615/A 615M, Grade 60 deformed steel.

## 2.8 BACKWATER VALVES

A. Gray-Iron Backwater Valves: ASME A112.14.1, gray-iron body and bolted cover, with bronze seat.

1. Horizontal Type: With swing check valve and hub-and-spigot ends.
2. Combination Horizontal and Manual Gate-Valve Type: With swing check valve, integral gate valve, and hub-and-spigot ends.
3. Terminal Type: With bronze seat, swing check valve, and hub inlet.

B. PVC Backwater Valves: Similar to ASME A112.14.1, horizontal type; with PVC body, PVC removable cover, and PVC swing check valve.

## 2.9 CLEANOUTS

A. PVC Cleanouts: PVC body with PVC threaded plug with Cast Iron adapter. Include PVC sewer pipe fitting and riser to cleanout of same material as sewer piping.

# PART 3 - EXECUTION

## 3.1 EARTHWORK

A. Excavating, trenching, and backfilling are specified in Division 2 Section "Earthwork."

## 3.2 IDENTIFICATION

A. Materials and their installation are specified in Division 2 Section "Earthwork." Arrange for installing green warning tapes directly over piping and at outside edges of underground structures.

1. Use warning tape or detectable warning tape over ferrous piping.
2. Use detectable warning tape over nonferrous piping and over edges of underground structures.

## 3.3 PIPING APPLICATIONS

A. General: Include watertight joints.

B. Refer to Part 2 of this Section for detailed specifications for pipe and fitting products listed below. Use pipe, fittings, and joining methods according to applications indicated.

C. Gravity-Flow Piping: Use the following:

1. Sizes 4” through 24”: Ductile-iron sewer pipe; standard-pattern, ductile-iron fittings; gaskets; and gasketed joints.
2. Sizes 4” through 24”: PVC sewer pipe and fittings, gasketed joints.

D. Force-Main Piping: Use the following:
1. Sizes 4” through 12”: Ductile-iron sewer pipe; standard- or compact-pattern, ductile-iron fittings; gaskets; and gasketed joints.
2. Sizes 4” through 12”: PVC pressure pipe, PVC pressure fittings, gaskets, and gasketed joints.

## 3.4 SPECIAL PIPE COUPLING AND FITTING APPLICATIONS

A. Special Pipe Couplings: Use where required to join piping and no other appropriate method is specified. Do not use instead of specified joining methods.

1. Use the following pipe couplings for non-pressure applications:

a. Sleeve type to join piping, of same size, or with small difference in OD.
b. Increaser/reducer-pattern, sleeve type to join piping of different sizes.
c. Bushing type to join piping of different sizes where annular space between smaller piping's OD and larger piping's ID permits installation.

2. Use pressure-type pipe couplings for force-main joints. Include PE film, pipe encasement.

B. Special Pipe Fittings: Use where indicated. Include PE film, pipe encasement.

## 3.5 INSTALLATION, GENERAL

A. General Locations and Arrangements: Drawing plans and details indicate general location and arrangement of underground sanitary sewerage piping. Location and arrangement of piping layout take design considerations into account. Install piping as indicated, to extent practical.

B. Install piping beginning at low point, true to grades and alignment indicated with unbroken continuity of invert. Place bell ends of piping facing upstream. Install gaskets, seals, sleeves, and couplings according to manufacturer's written instructions for using lubricants, cements, and other installation requirements.

C. Use manholes for changes in direction, unless fittings are indicated. Use fittings for branch connections, unless direct tap into existing sewer is indicated.

D. Use proper size increasers, reducers, and couplings where different sizes or materials of pipes and fittings are connected. Reducing size of piping in direction of flow is prohibited.

E. Install gravity-flow piping and connect to building's sanitary drains, of sizes and in locations indicated. Terminate piping as indicated.

1. Install piping pitched down in direction of flow, at minimum slope of 2 percent, unless otherwise indicated.
2. Install piping with 36-inch minimum cover.

F. Install force-main piping between and connect to building's sanitary-drainage force main and termination point indicated.

1. Install piping with restrained joints at horizontal and vertical changes in direction. Use cast-in-place concrete supports and anchors or corrosion-resistant rods and clamps.
2. Install piping with 36-inch minimum cover.

G. Extend sanitary sewerage piping and connect to building's sanitary drains, of sizes and in locations indicated. Terminate piping as indicated.

H. Install ductile-iron, force-main piping according to AWWA C600.

I. Install PVC force-main piping according to AWWA M23.

J. Install force-main piping between and connect to building's force main and termination point indicated.

K. Install force-main piping between and connect to packaged sewage pump station outlet and termination point indicated.

L. Tunneling: Install pipe under streets or other obstructions that cannot be disturbed by tunneling, jacking, or a combination of both. Casing pipe shall be steel pipe meeting ASTM specifications, 35,000 psi yield strength and 60,000 psi tensile strength to serve as a casing for the sewer and shall be installed within the limits and at the location shown on the construction drawings. The casing pipe shall be bituminous coated inside and out, and conform to ASTM A 123. The casing pipe shall have a minimum wall thickness as indicated in the table. Spacers and End Boots shall be as manufactured by Advanced Products & Systems. Joint restraints meeting the pipe manufacturers specifications shall be used on the carrier pipe.

## 3.6 PIPE JOINT CONSTRUCTION AND INSTALLATION

A. General: Join and install pipe and fittings according to installations indicated.

B. Refer to Division 2 Section "Utility Materials" for basic piping joint construction and installation.

C. Ductile-Iron Sewer Pipe with Ductile-Iron Fittings: According to AWWA C600.

1. Install PE film, pipe encasement over ductile-iron sewer pipe and ductile-iron fittings according to ASTM A 674 or AWWA C105.

D. PVC Pressure Pipe and Fittings: Join and install according to AWWA M23.

E. PVC Sewer Pipe and Fittings: As follows:

1. Join pipe and gasketed fittings with gaskets according to ASTM D 2321.
2. Install according to ASTM D 2321.

F. System Piping Joints: Make joints using system manufacturer's couplings, unless otherwise indicated.

G. Join piping made of different materials or dimensions with couplings made for this application. Use couplings that are compatible with and that fit both systems' materials and dimensions.

H. Install with top surfaces of components, except piping, flush with finished surface.

## 3.7 MANHOLE INSTALLATION

A. General: Install manholes, complete with appurtenances and accessories indicated.

B. Form continuous concrete channels and benches between inlets and outlet.

C. Set tops of frames and covers flush with finished surface of manholes that occur in pavements. Set tops 3 inches above finished surface elsewhere, unless otherwise indicated.

D. Install pre-cast concrete manhole sections with gaskets according to ASTM C 891.

## 3.8 CONCRETE PLACEMENT

A. Place cast-in-place concrete according to ACI 318 and ACI 350R.

## 3.9 BACKWATER VALVE INSTALLATION

A. Install horizontal units in piping where indicated.

B. Install combination units in piping and in structures where indicated.

C. Install terminal units on end of piping and in structures where indicated. Secure units to structure walls.

## 3.10 CLEANOUT INSTALLATION

A. Install cleanouts and riser extension from sewer pipe to cleanout at grade. Use cast-iron soil pipe fittings in sewer pipes at branches for cleanouts and cast-iron soil pipe for riser extensions to cleanouts. Install piping so cleanouts open in direction of flow in sewer pipe.

B. Set cleanout frames and covers in earth in cast-in-place concrete block, 18 by 18 by 12 inches deep. Set with tops 1 inch above surrounding grade.

C. Set cleanout frames and covers in concrete pavement with tops flush with pavement surface.

## 3.11 TAP CONNECTIONS

A. Make connections to existing piping and underground structures so finished Work complies as nearly as practical with requirements specified for new Work.

B. Use commercially manufactured wye fittings for piping branch connections. Remove section of existing pipe; install wye fitting into existing piping; and use a sleeve type coupling with gasket joints to insure a water tight connection.

C. Protect existing piping and structures to prevent concrete or debris from entering while making tap connections. Remove debris or other extraneous material that may accumulate.

## 3.12 CLOSING ABANDONED SANITARY SEWERAGE SYSTEMS

A. Abandoned Piping: Close open ends of abandoned underground piping indicated to remain in place. Include closures strong enough to withstand hydrostatic and earth pressures that may result after ends of abandoned piping have been closed. Use either procedure below:

1. Close open ends of piping with at least 8-inch- (200-mm-) thick, brick masonry bulkheads.
2. Close open ends of piping with threaded metal caps, plastic plugs, or other acceptable methods suitable for size and type of material being closed. Do not use wood plugs.

B. Abandoned Structures: Excavate around structure as required and use one procedure below:

1. Remove structure and close open ends of remaining piping.
2. Remove top of structure down to at least 36 inches below final grade. Fill to within 12 inches of top with stone, gravel, or compacted dirt.
3. Backfill to grade according to Division 2 Section "Earthwork."

## 3.13 FIELD QUALITY CONTROL

A. Clear interior of piping and structures of dirt and superfluous material as work progresses. Maintain swab or drag in piping, and pull past each joint as it is completed.

1. Place plug in end of incomplete piping at end of day and when work stops.
2. Flush piping between manholes and other structures to remove collected debris, if required by authorities having jurisdiction.

B. Inspect interior of piping to determine whether line displacement or other damage has occurred. Inspect after approximately 24 inches of backfill is in place, and again 30 days after completion of installation and placement of backfill.

1. Submit separate reports for each system inspection.
2. Defects requiring correction include the following:

a. Alignment: Less than full diameter of inside of pipe is visible between structures.
b. Deflection: Flexible piping with deflection that prevents passage of ball or cylinder of size not less than 95 percent of piping diameter.
c. Crushed, broken, cracked, or otherwise damaged piping.
d. Infiltration: Water leakage into piping.
e. Exfiltration: Water leakage from or around piping.

3. Replace defective piping using new materials, and repeat inspections until defects are within allowances specified.
4. Reinspect and repeat procedure until results are satisfactory.

C. Test new piping systems, and parts of existing systems that have been altered, extended, or repaired, for leaks and defects.

1. Do not enclose, cover, or put into service before inspection and approval.
2. Test completed piping systems according to authorities having jurisdiction or those requirements shown on the drawings, whichever is more stringent.
3. Schedule tests and inspections by authorities having jurisdiction with at least 48 hours' advance notice.
4. Submit separate reports for each test.
5. Perform tests meeting Ohio EPA, the Ten States Standards, and the requirements of local authorities, or the tests shown on the drawings, whichever is more stringent.

a. Sanitary Sewerage: Perform hydrostatic test.

b. Sanitary Sewerage: Perform air test according to UNI-B-6.

1) Option: Test concrete piping according to ASTM C 924

c. Force Main: Perform hydrostatic test after thrust blocks, supports, and anchors have hardened. Test at pressure not less than one times maximum system operating pressure, but not less than 150 psig (1035kPa)

1) Ductile-Iron Piping: Test according to AWWA C600, Section "Hydraulic Testing."
2) PVC Piping: Test according to AWWA M23, "Testing and Maintenance" Chapter.

6. Manholes: Perform vacuum test according to ASTM C 1244-93
7. Leaks and loss in test pressure constitute defects that must be repaired.
8. Replace leaking piping using new materials, and repeat testing until leakage is within allowances specified.

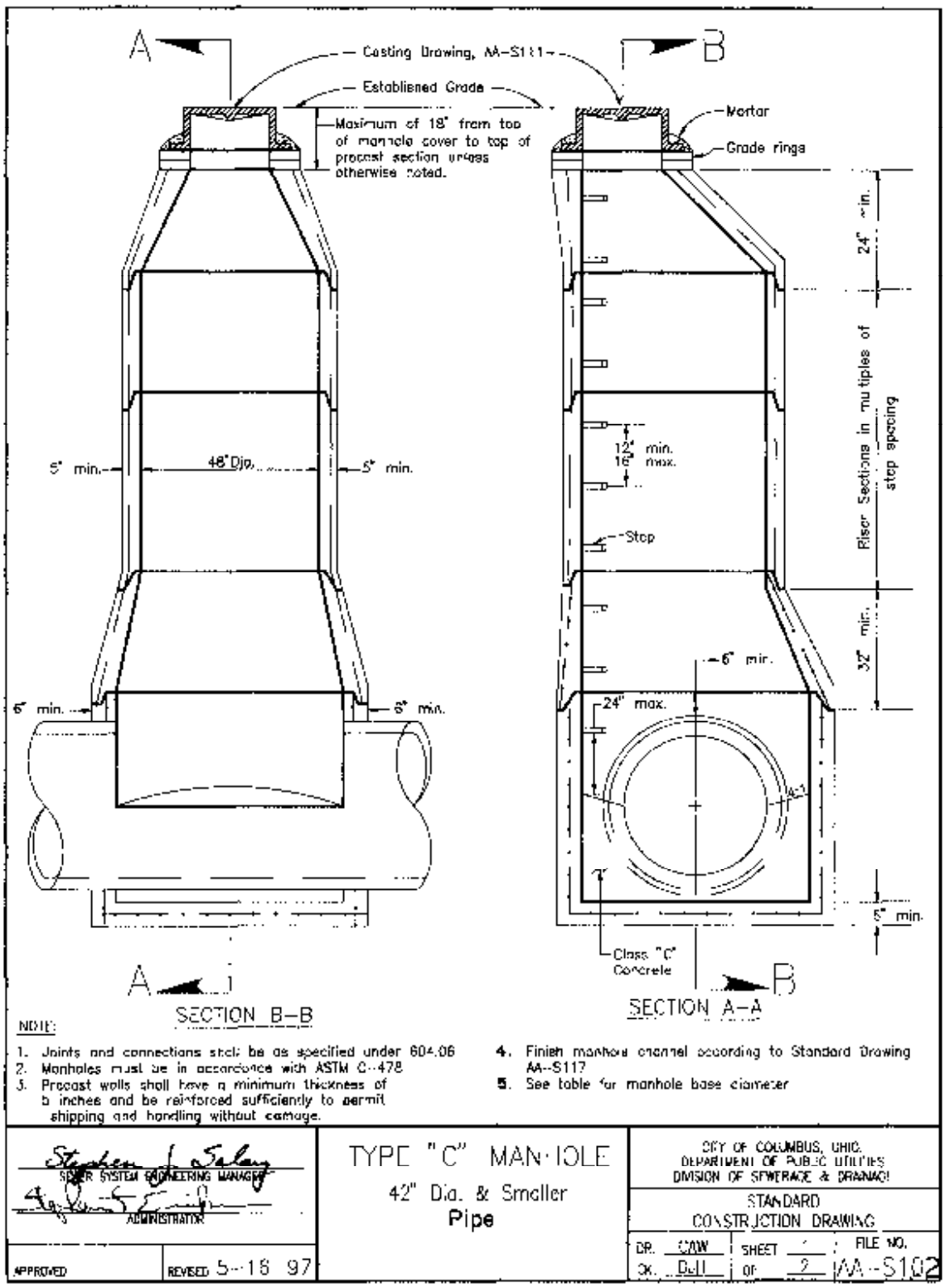
A
B
Casting Drawing, AA-S111
Established Grade
Maximum of 18" from top of manhole cover to top of precast section unless otherwise noted.
Mortar
Grade rings
24" min.
Riser Sections in multiples of step spacing
12" min.
16" max.
Stop
32" min.
6" min.
24" max.
5" min.
Class "C" Concrete
5" min.
48" Dia.
5" min.
6" min.
6" min.
SECTION B-B
SECTION A-A
NOTE:
1. Joints and connections shall be as specified under 604.06
2. Manholes must be in accordance with ASTM C-478
3. Precast walls shall have a minimum thickness of 5 inches and be reinforced sufficiently to permit shipping and handling without damage.
4. Finish manhole channel according to Standard Drawing AA-S117
5. See table for manhole base diameter
SEWER SYSTEM ENGINEERING MANAGER
ADMINISTRATOR
APPROVED
REVISED 5-16 97
TYPE "C" MANHOLE
42" Dia. & Smaller
Pipe
CITY OF COLUMBUS, OHIO
DEPARTMENT OF PUBLIC UTILITIES
DIVISION OF SEWERAGE & DRAINAGE
STANDARD
CONSTRUCTION DRAWING
DR. CAW
CK. DJH
SHEET 2 OF 2
FILE NO. AA-S102

| MANHOLE BASE I.D. (inches) | MAXIMUM PIPE O.D. | |
|---|---|---|
| | Straight through Installation (inches) | Right Angle Installation (inches) |
| 48 | 31 | 25 |
| 60 | 42 | 32 |
| 72 | 51 | 38 |
| 84 | — | 44 |
| 96 | — | 50 |

SEWER SYSTEM ENGINEERING MANAGER

ADMINISTRATOR

APPROVED | REVISED 5-16-97

TYPE "C" MANHOLE
42" Dia. & Smaller
**Pipe**

CITY OF COLUMBUS, OHIO.
DEPARTMENT OF PUBLIC UTILITIES
DIVISION OF SEWERAGE & DRAINAGE

STANDARD
CONSTRUCTION DRAWING

DR. RLS. | SHEET 2 OF 2 | FILE NO. AA-5102

CK.

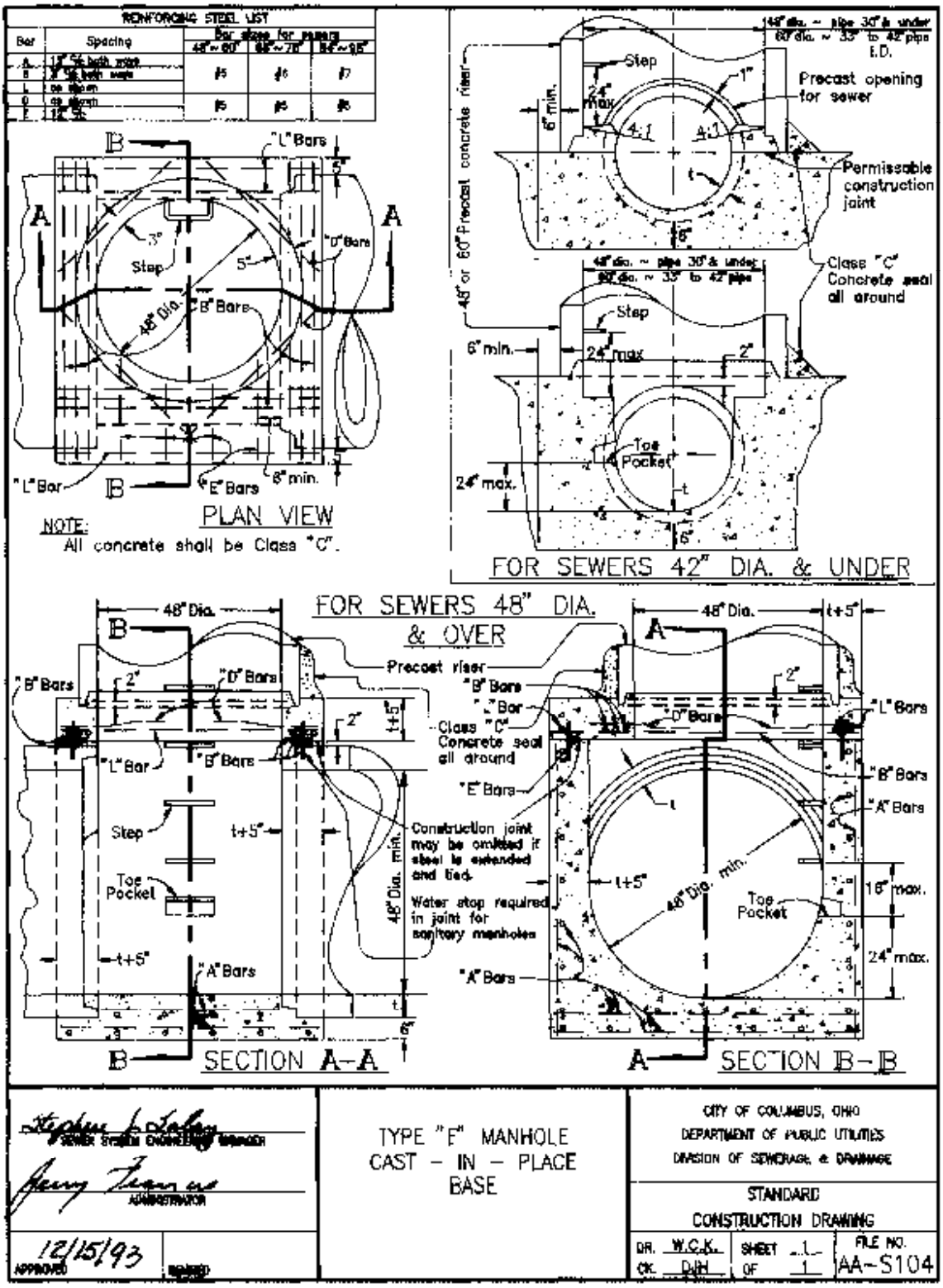
REINFORCING STEEL LIST
Bar
Spacing
PLAN VIEW
NOTE:
All concrete shall be Class "C".
FOR SEWERS 42" DIA. & UNDER
FOR SEWERS 48" DIA. & OVER
SECTION A-A
SECTION B-B
Precast opening for sewer
Permissable construction joint
Class "C" Concrete seal all around
Precast riser
Construction joint may be omitted if steel is extended and tied.
Water stop required in joint for sanitary manholes
Toe Pocket
Step
TYPE "F" MANHOLE CAST - IN - PLACE BASE
CITY OF COLUMBUS, OHIO
DEPARTMENT OF PUBLIC UTILITIES
DIVISION OF SEWERAGE & DRAINAGE
STANDARD CONSTRUCTION DRAWING
12/15/93
APPROVED
DR. W.C.K.
CK. DJH
SHEET 1 OF 1
FILE NO. AA-S104

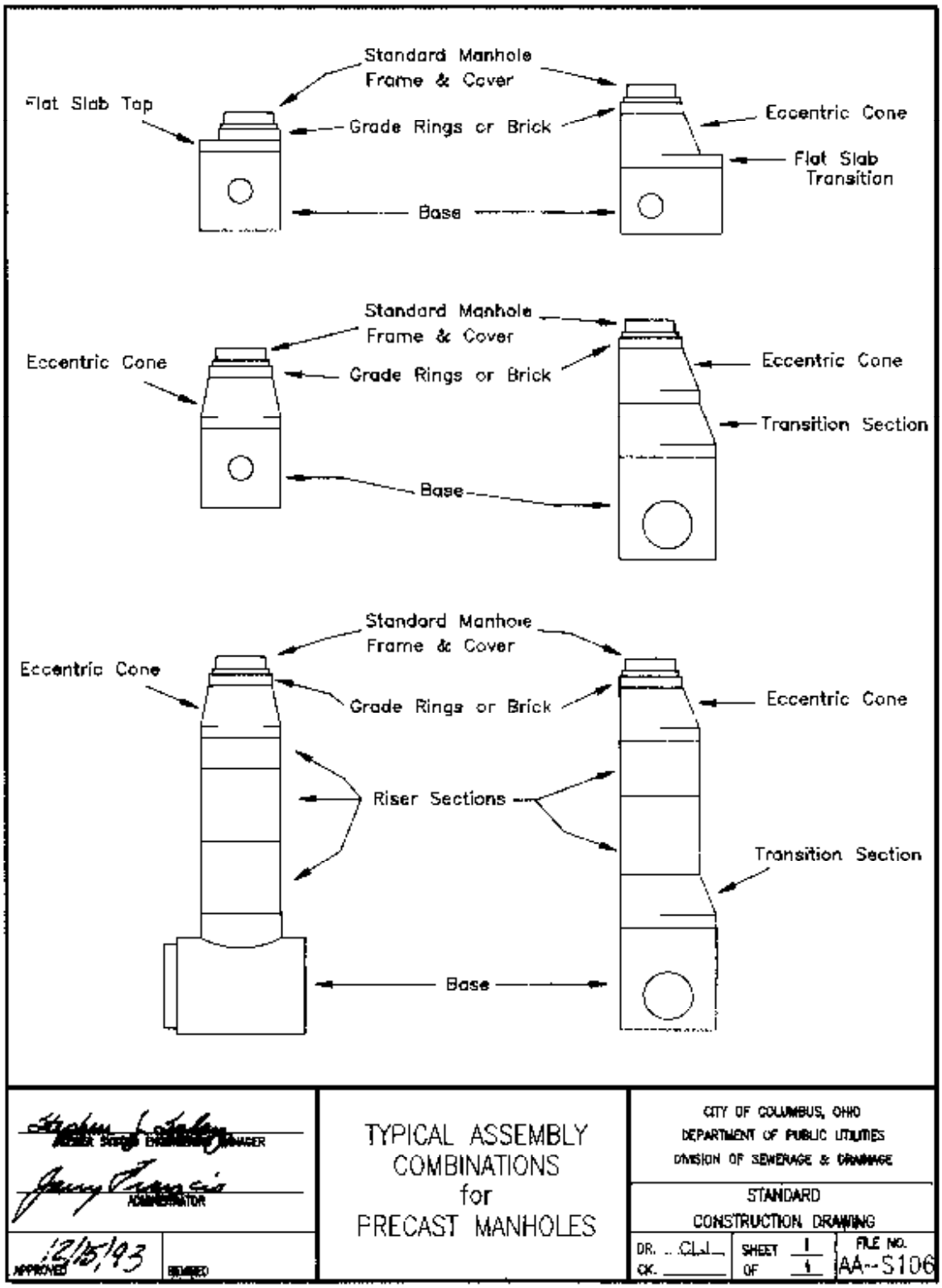
Standard Manhole
Frame & Cover
Flat Slab Top
Grade Rings or Brick
Eccentric Cone
Flat Slab
Transition
Base
Standard Manhole
Frame & Cover
Eccentric Cone
Grade Rings or Brick
Eccentric Cone
Transition Section
Base
Standard Manhole
Frame & Cover
Eccentric Cone
Grade Rings or Brick
Eccentric Cone
Riser Sections
Transition Section
Base
12/15/93
APPROVED
REVISED
TYPICAL ASSEMBLY
COMBINATIONS
for
PRECAST MANHOLES
CITY OF COLUMBUS, OHIO
DEPARTMENT OF PUBLIC UTILITIES
DIVISION OF SEWERAGE & DRAINAGE
STANDARD
CONSTRUCTION DRAWING
DR.
CK.
SHEET 1
OF 1
FILE NO.
AA--S106

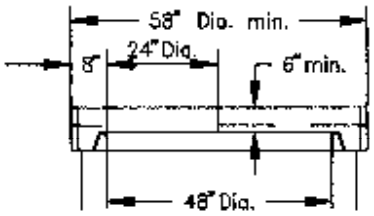


FLAT SLAB TOP
(48" Risers)

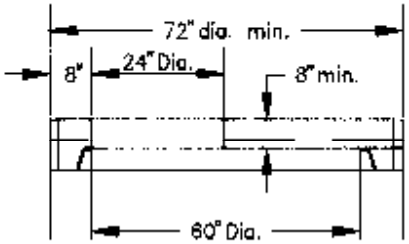


FLAT SLAB TOP
(60" Risers)

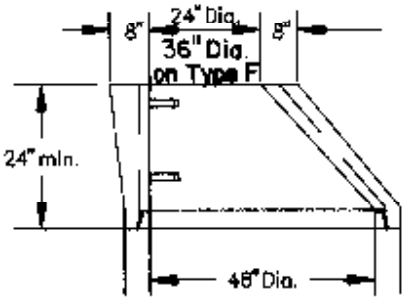


ECCENTRIC CONE TOP
(48" Risers)

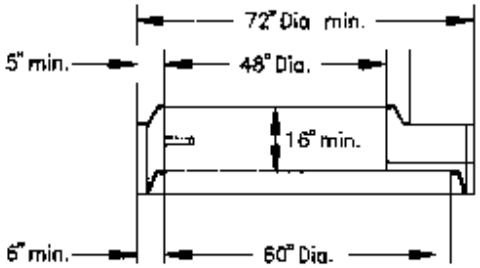


FLAT SLAB TRANSITION
(60" to 48")

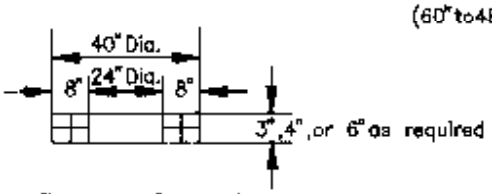


STANDARD GRADE RING

NOTE:
All items in accordance with ASTM C-478

| | | |
|---|---|---|
| Stephen J. Salay, Sewer System Engineering Manager<br>Jerry Ramsey, Administrator<br>APPROVED 12/15/93 REVISED | MISC. ITEMS<br>PRECAST MANHOLES | CITY OF COLUMBUS, OHIO.<br>DEPARTMENT OF PUBLIC UTILITIES<br>DIVISION OF SEWERAGE & DRAINAGE<br>STANDARD<br>CONSTRUCTION DRAWING<br>DR. CAW CK. DJH SHEET 1 OF 1 FILE NO. AA-S107 |

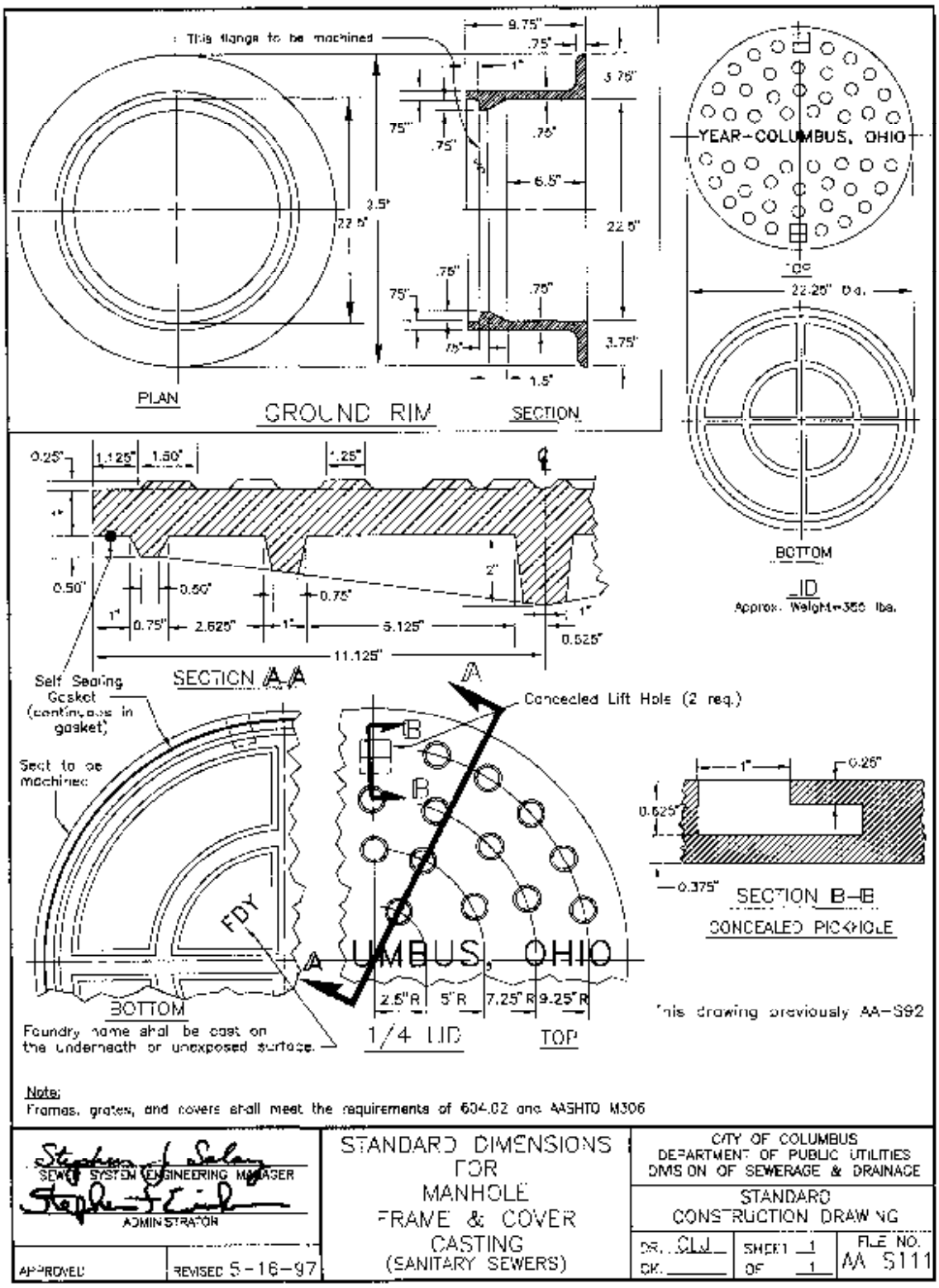
This flange to be machined
PLAN
GROUND RIM
SECTION
YEAR-COLUMBUS, OHIO
TOP
22.25" Dia.
BOTTOM
LID
Approx. Weight=355 lbs.
SECTION A-A
Self Sealing Gasket (continuous in gasket)
Seat to be machined
Concealed Lift Hole (2 req.)
FDY
COLUMBUS, OHIO
BOTTOM
Foundry name shall be cast on the underneath or unexposed surface.
1/4 LID
TOP
SECTION B-B
CONCEALED PICKHOLE
This drawing previously AA-S92
Note:
Frames, grates, and covers shall meet the requirements of 604.02 and AASHTO M306
SEWER SYSTEM ENGINEERING MANAGER
ADMINISTRATOR
APPROVED
REVISED 5-16-97
STANDARD DIMENSIONS FOR MANHOLE FRAME & COVER CASTING (SANITARY SEWERS)
CITY OF COLUMBUS
DEPARTMENT OF PUBLIC UTILITIES
DIVISION OF SEWERAGE & DRAINAGE
STANDARD CONSTRUCTION DRAWING
DR. CLJ
CK.
SHEET 1 OF 1
FILE NO. AA S111

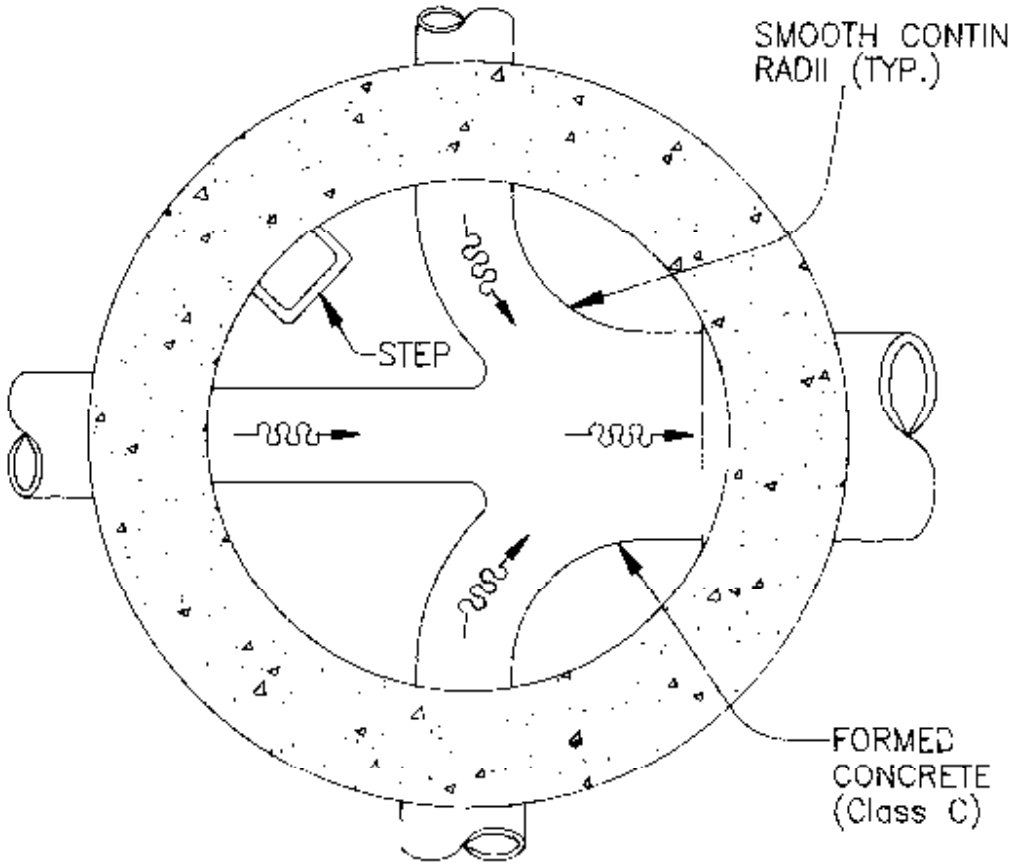


SECTION SHOWING
METHOD OF TURNING SIDE DRAINS

| | | |
|---|---|---|
| 12/15/93 APPROVED | PRECAST MANHOLE BASE CHANNELIZATION DETAIL | CITY OF COLUMBUS, OHIO<br>DEPARTMENT OF PUBLIC UTILITIES<br>DIVISION OF SEWERAGE & DRAINAGE<br>STANDARD<br>CONSTRUCTION DRAWING<br>DR. CBM CK. DJM SHEET 1 OF 1 FILE NO. AA-S117 |

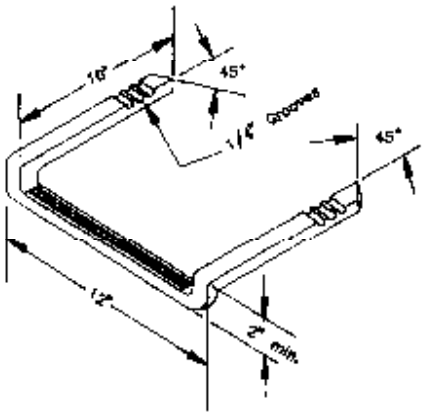


ALUMINUM STEP
Item 711.30

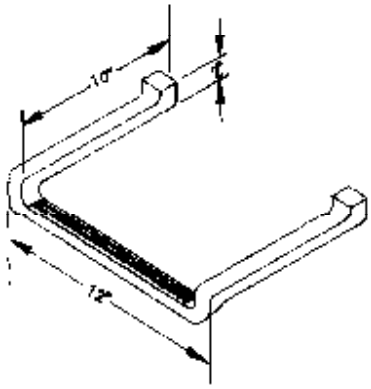


FERROUS METAL STEP
Item 711.13

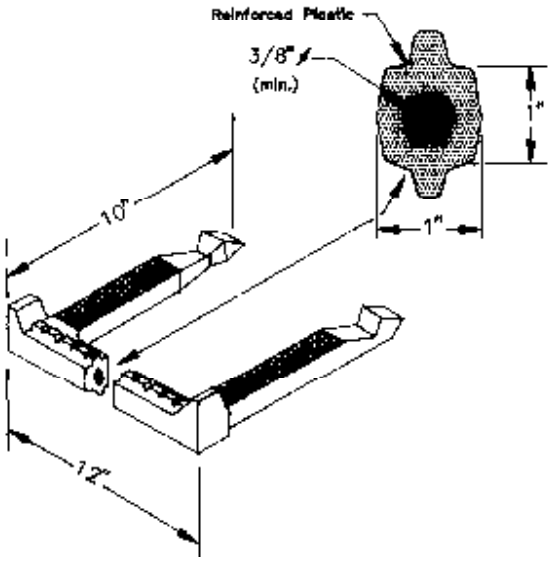


POLYPROPYLENE STEP
Item 711.31

NOTES :

1. Steps shall meet the requirements of ASTM C-478, and shall be installed with a uniform vertical spacing of 12" to 16".
2. Steps shall have a minimum cross sectional dimension of 1" for ferrous metal and 3/4" for aluminum.

| | | |
|---|---|---|
| SEWER SYSTEM ENGINEERING MANAGER<br>ADMINISTRATOR<br>12/15/93 APPROVED<br>REVISED | MANHOLE STEPS DETAIL | CITY OF COLUMBUS<br>DEPARTMENT OF PUBLIC UTILITIES<br>DIVISION OF SEWERAGE & DRAINAGE<br>STANDARD CONSTRUCTION DRAWING<br>DR. CLJ. CK. ____ SHEET 1 OF 1 FILE NO. AA-S119 |

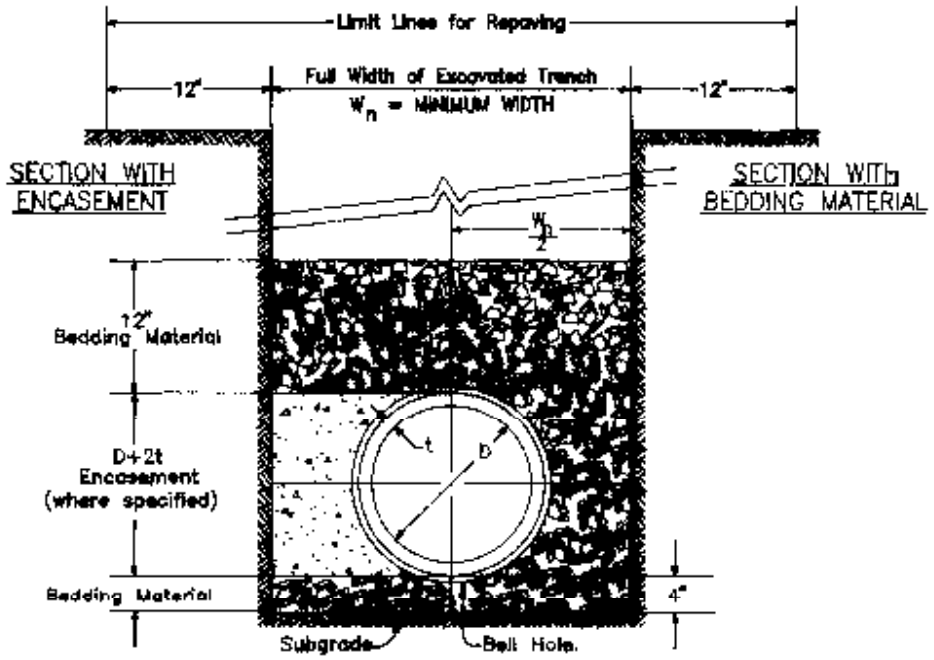


NOTES

Sections Symetrical about ℄ .
Dimensions are expressed in inches.
Encasement to be Class "A" Concrete, Item 905
On sanitary sewer construction trench dams are required as specified under 901.11

| D * | $W_n$ * | D * | $W_n$ * |
|---|---|---|---|
| 6 | 30 | 24 | 48 |
| 8 | 30 | 27 | 52 |
| 10 | 30 | 30 | 56 |
| 12 | 32 | 36 | 64 |
| 15 | 36 | 42 | 72 |
| 18 | 40 | 48 | 80 |
| 21 | 44 | | |

*Inches

SEWER SYSTEM ENGINEERING MANAGER

ADMINISTRATOR

12/15/93
APPROVED

REVISED

TYPE 1 BEDDING
FOR FLEXIBLE SEWER PIPE
6" – 48" DIAMETER
ITEM 901

CITY OF COLUMBUS
DEPARTMENT OF PUBLIC UTILITIES
DIVISION OF SEWERAGE & DRAINAGE
STANDARD
CONSTRUCTION DRAWING

DR. CAW
CK. DJH
SHEET 1 OF 1
FILE NO. AA–S149

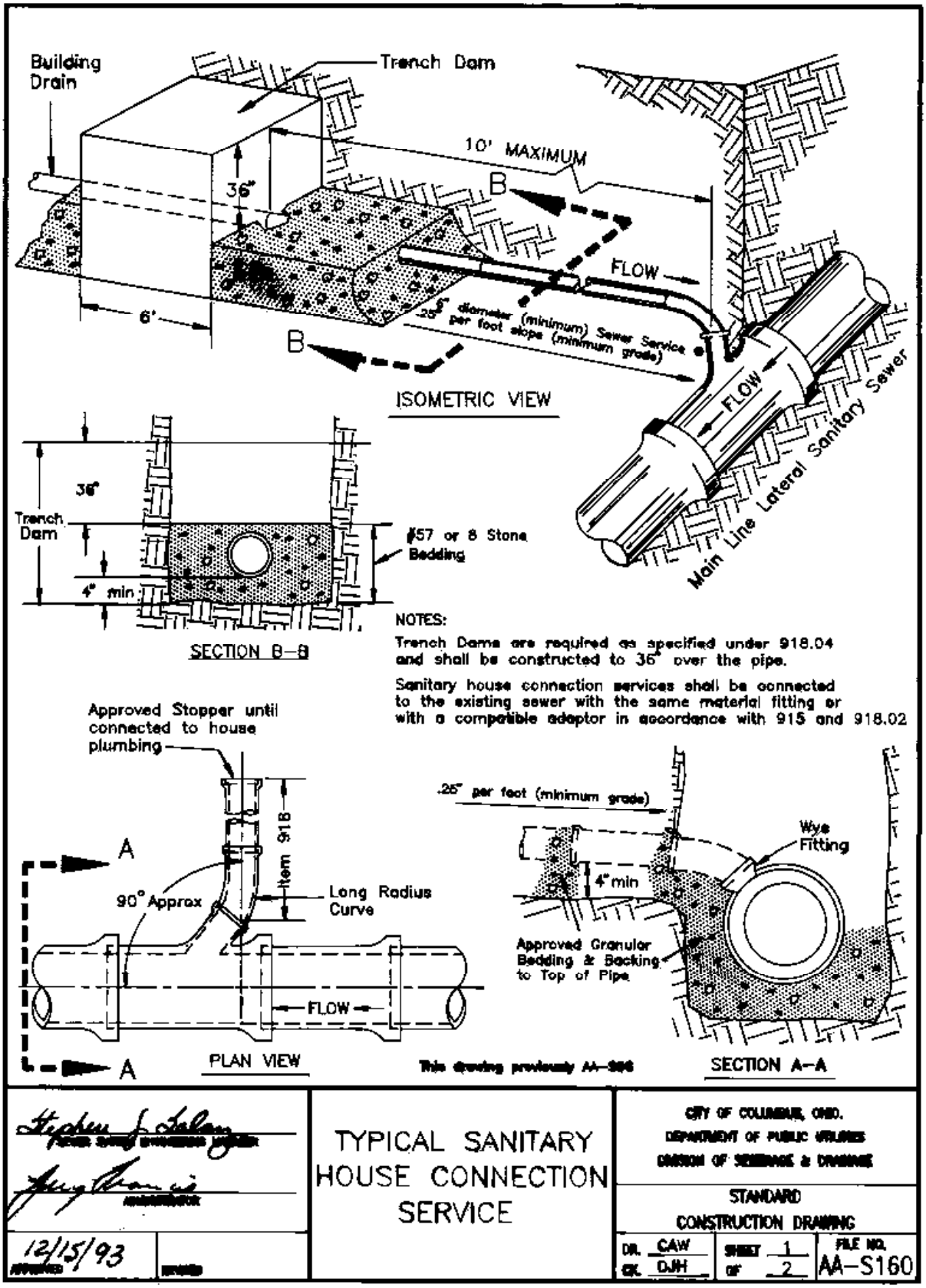
Building Drain
Trench Dam
10' MAXIMUM
36"
6'
B
B
FLOW
.25" per foot slope (minimum grade)
6" diameter (minimum) Sewer Service
ISOMETRIC VIEW
FLOW
Main Line Lateral Sanitary Sewer
36"
Trench Dam
4" min
#57 or 8 Stone Bedding
SECTION B–B
NOTES:
Trench Dams are required as specified under 918.04 and shall be constructed to 36" over the pipe.
Sanitary house connection services shall be connected to the existing sewer with the same material fitting or with a compatible adaptor in accordance with 915 and 918.02
Approved Stopper until connected to house plumbing
A
90° Approx
Item 918
Long Radius Curve
FLOW
A
PLAN VIEW
.25" per foot (minimum grade)
Wye Fitting
4" min
Approved Granular Bedding & Backing to Top of Pipe
SECTION A–A
TYPICAL SANITARY HOUSE CONNECTION SERVICE
CITY OF COLUMBUS, OHIO
DEPARTMENT OF PUBLIC UTILITIES
DIVISION OF SEWERAGE & DRAINAGE
STANDARD CONSTRUCTION DRAWING
12/15/93
DR. CAW
CK. DJH
SHEET 1 OF 2
FILE NO. AA-S160

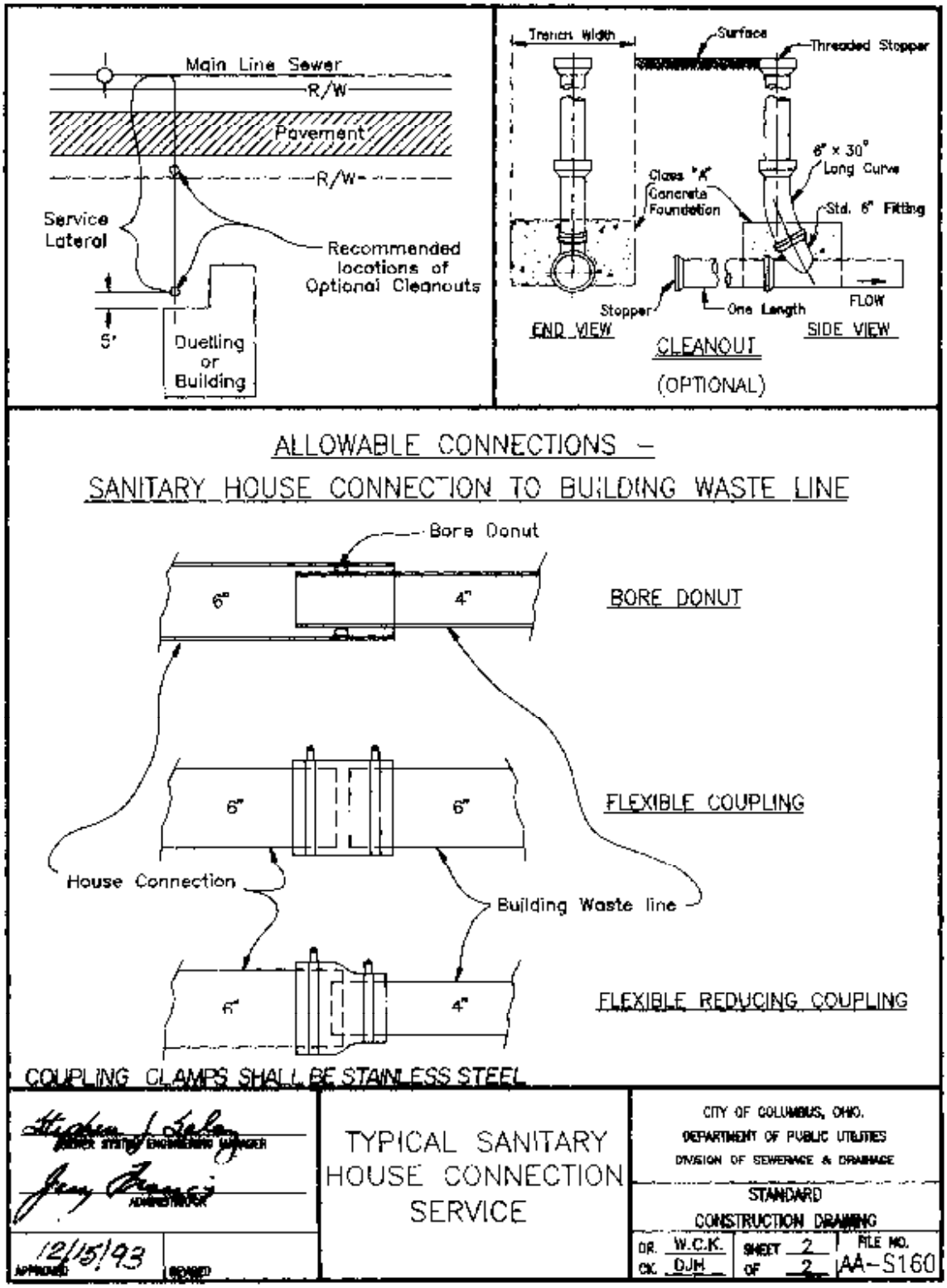


END OF SECTION 33 30 00

# SECTION 33 41 00 - STORM UTILITY DRAINAGE PIPING

## PART 1 GENERAL

### 1.01 SECTION INCLUDES

A. Site storm sewerage drainage piping, fittings and accessories, and bedding.

B. Connection of drainage system to public utility.

C. Catch basins, paved area drainage, site surface drainage, outfalls, and detention basin.

D. Connection to drainage boots from building downspouts.

### 1.02 RELATED SECTIONS

A. Section 31 20 00 – Earth Moving: Excavating for sewer system piping and structures.

### 1.03 REFERENCES

A. ASTM C14 - Concrete Sewer, Storm Drain, and Culvert Pipe.

B. ASTM C76 - Reinforced Concrete Culvert, Storm Drain, and Sewer Pipe.

C. ASTM C443 - Joints for Circular Concrete Sewer and Culvert Pipe, Using Rubber Gaskets.

D. ASTM D698 - Test Methods for Moisture-Density Relations of Soils and Soil-Aggregate Mixtures, Using 5.5 lb Rammer and 12 inch Drop.

E. AASHTO M 252

F. ASTM F 477

G. ASTM D3034 - Type PSM Polyvinylchloride (PVC) Sewer Pipe and Fittings.

### 1.04 SUBMITTALS FOR REVIEW

A. Division 1 - Submittals: Procedures for submittals.

B. Product Data: Provide data indicating pipe, pipe accessories, and structures.

### 1.05 SUBMITTALS FOR INFORMATION

A. Division 1 - Submittals: Procedures for submittals.

B. Manufacturer's Installation Instructions: Indicate special procedures required to install Products specified.

C. Manufacturer's Certificate: Certify that Products meet or exceed specified requirements.

1.06 SUBMITTALS AT PROJECT CLOSEOUT

A. Division 1 - Contract Closeout: Procedures for submittals.

B. Accurately record actual locations of pipe runs, connections, catch basins, cleanouts, invert elevations, and other structures.

C. Identify and describe unexpected variations to subsoil conditions or discovery of uncharted utilities.

1.07 REGULATORY REQUIREMENTS

A. Conform to applicable codes and local standards for materials and installation of the Work of this section.

1.08 COORDINATION

A. Coordinate the Work with specified earthwork and connections to existing piping, inlets, downspouts and public utility.

PART 2 PRODUCTS

2.01 SEWER PIPE MATERIALS

B. Non-reinforced Concrete Sewer Pipe
   1. Concrete Pipe: ASTM C14, Class 2; unreinforced; inside nominal diameter indicated, bell and spigot end joints.
      a. Concrete Pipe Joint Devices: ASTM C443, rubber compression gasket joint.
   2. Reinforced Concrete Sewer Pipe
      a. Reinforced Concrete Pipe: ASTM C76, Class III with Wall Type B; mesh or bar reinforcement; inside nominal diameter indicated, bell and spigot end joints.
      b. Reinforced Concrete Pipe Joint Device: ASTM C443, rubber compression gasket joint.
   3. Plastic Pipe: ASTM D3034, Type PSM, Polyvinylchloride (PVC) material; inside nominal diameter indicated, bell and spigot style rubber ring sealed gasket joint.
   4. Corrugated, Polyethelene (PE) Drainage Tubing: AASHTO M 252 Interim, Type S, with smooth waterway for gasketed joints.
      a. Fittings: ASTM D 3034, polyvinyl chloride (PVC) with socket ends, for gasketed joints.
      b. Gaskets: ASTM F 477, elastomeric seals, that mates with tube and fittings to form watertight joints.
   5. Perforated Corrugated, Polyethelene (PE) Drainage Tubing: AASHTO M 252 Interim, Type S, with smooth waterway for gasketed joints.
      a. Fittings: ASTM D 3034, polyvinyl chloride (PVC) with socket ends, for gasketed joints.
      b. Gaskets: ASTM F 477, elastomeric seals, that mate with tube and fittings to form watertight joints.

2.02 ACCESSORIES

A. Fittings: Same material as pipe molded or formed to suit pipe size and end design, in required tee, bends, elbows, cleanouts, adapters, reducers, traps and other configurations required.

C. Grout: Specified in Section 705.22 of ODOT-CMS.

2.03 CATCH BASINS

A. Lid and Frame: Complying with ODOT-CMS and/or ODOT Standard Drawings for lid and frame scheduled on Drawings.

B. Shaft Construction and Top Section: Complying with ODOT-CMS and/or ODOT Standard Drawings for shaft and top construction scheduled on Drawings.

D. Base Pad: Complying with ODOT-CMS and/or ODOT Standard Drawings for base pad construction scheduled on Drawings.

2.04 CLEANOUTS

A. Cleanout Lid and Frame: Cast iron construction, hinged lid:
1. Lid Design: Checkerboard.
2. Nominal Lid and Frame Size: 8 x 8 inch.

B. Plastic Cleanout: ASTM D3034, Type PSM, Polyvinylchloride (PVC) material; inside nominal diameter indicated, bell and spigot style rubber ring sealed gasket joint for joining to conduits and threaded end for receiving threaded plastic cap.

2.05 BEDDING AND COVER MATERIALS

A. Fine Bedding Material: As specified in Section 31 20 00 – Earth Moving.

B. Coarse Bedding Material: As specified in Section 31 20 00 – Earth Moving.

C. Compacted Granular Material: As specified in Item 304 of ODOT-CMS.

2.06 OUTFALLS

A. Riprap/Rock Channel Protection: As Specified on plans per Item 601 ODOT-CMS.

B. Energy Dissipators: Construction as indicated, from materials indicated.

PART 3 EXECUTION

3.01 EXAMINATION

A. Verify that trench cut and excavation base is ready to receive work and excavations, dimensions, and elevations are as indicated on Drawings.

3.02 PREPARATION

A. Hand trim excavations to required elevations. Correct over excavation with Fill complying with requirements of Section 31 20 00 – Earth Moving.

B. Remove large stones and other matter which could damage piping or impede consistent backfilling or compaction.

3.03 BEDDING

A. Excavate pipe trench in accordance with Section 31 20 00 – Earth Moving for work of this section. Hand trim excavation for accurate placement of pipe to elevations indicated.

B. Place bedding material at trench bottom, level materials in continuous layer not less than:

1. For sewer pipe 6-inches and less in diameter a depth of 6-inches below bottom of pipe compacted to 98-percent.
2. For sewer pipe over 6-inches diameter a depth of 8-inches below bottom of pipe compacted to 98-percent.

A. Maintain optimum moisture content of bedding material to attain required compaction density.

1. Extend bedding from bottom of pipe up to 1/3 pipe diameter. Shape bedding to receive pipe.

3.04 COVER

A. Place cover material at top of bedding, level materials in continuous layer not less than:

B. For sewer pipe 6-inches and less in diameter a depth of 6-inches above top of pipe compacted to 98-percent.

C. For sewer pipe over 6-inches diameter a depth of 8-inches above top of pipe compacted to 98-percent.

3.05 INSTALLATION - PIPE

A. Install pipe, fittings, and accessories in accordance with manufacturer's instructions. Seal joints watertight.

B. Lay pipe to slope gradients noted on drawings with maximum variation from true slope of 1/8 inch in 10 feet.

C. Install backfill at sides and over top of pipe.

D. Refer to Section 31 20 00 – Earth Moving for trenching and backfilling requirements. Do not displace or damage pipe when compacting.

E. Connect to building downspouts, inlets, existing piping and public utility.

3.06 INSTALLATION - CATCH BASINS

A. Form bottom of excavation clean and smooth to correct elevation.

B. Form and place Cast-In-Place Concrete base pad, with provision for storm sewer pipe end sections, or provide Fine Bedding Material to depth required for smooth level base to receive Pre-Cast Catch Basins.

C. Level top surface of base pad; sleeve concrete shaft sections to receive storm sewer pipe sections.

D. Establish elevations and pipe inverts for inlets and outlets as indicated.

E. Mount lid and frame level in grout, secured to top cone section to elevation indicated.

3.07 FIELD QUALITY CONTROL

A. Clear interior of piping and structures of dirt and superfluous material as work progresses. Maintain swab or drag in piping, and pull past each joint as it is completed.

B. In large, accessible piping, brushes and brooms may be used for cleaning.

C. Place plug in end of incomplete piping at end of day and when work stops.

D. Flush piping between manholes and other structures to remove collected debris, if required by authorities having jurisdiction.

E. Inspect interior of piping to determine whether line displacement or other damage has occurred. Inspect after approximately 24 inches of backfill is in place, and again at completion of Project.

F. Submit separate reports for each system inspection.

G. Defects requiring correction include the following:

a. Alignment: Less than full diameter of inside of pipe is visible between structures.
b. Deflection: Flexible piping with deflection that prevents passage of ball or cylinder of size not less than 92.5 percent of piping diameter.
c. Crushed, broken, cracked, or otherwise damaged piping.
d. Infiltration: Water leakage into piping.
e. Exfiltration: Water leakage from or around piping.

H. Replace defective piping using new materials, and repeat inspections until defects are within allowances specified.

I. Re-inspect and repeat procedure until results are satisfactory.

J. Test new piping systems, and parts of existing systems that have been altered, extended, or repaired, for leaks and defects.

K. Do not enclose, cover, or put into service before inspection and approval.

L. Test completed piping systems according to authorities having jurisdiction.

M. Schedule tests and inspections by authorities having jurisdiction with at least 24 hours' advance notice.

N. Submit separate reports for each test.

O. Where authorities having jurisdiction do not have published procedures, perform tests as follows:

a. Force Main: Perform hydrostatic test after thrust blocks, supports, and anchors have hardened. Test at pressure not less than one and one-half times maximum system operating pressure, but not less than 150 psig.
b. Ductile-Iron Piping: Test according to AWWA C600, Section "Hydraulic Testing."
c. PVC Piping: Test according to AWWA M23, "Testing and Maintenance" Chapter.

P. Leaks and loss in test pressure constitute defects that must be repaired.

Q. Replace leaking piping using new materials, and repeat testing until leakage is within allowances specified.

3.08 PROTECTION

A. Protect finished Work under provisions of contract documents.

B. Protect pipe and aggregate cover from damage or displacement until backfilling operation is in progress.

3.08 SCHEDULE

A. Storm Sewer Piping
1. Reinforced Concrete Pipe, Non-reinforced Concrete Pipe, and Plastic pipe where indicated.
2. Size indicated.
3. Bedding
a. Under Paved Areas - Coarse Aggregate Bedding compacted to 98 percent
b. Piping 6-inches and Less in Diameter Under Landscaped Areas - Fine Aggregate Bedding compacted to 98 percent.
c. Piping Over 6-inches in Diameter Under Landscaped Areas - Coarse Aggregate Bedding compacted to 98 percent

4. Cover
    a. Under Paved Areas – Compacted Granular Material
    b. Piping 6-inches and Less in Diameter Under Landscaped Areas - Fine Aggregate Bedding compacted to 98 percent.
    c. Piping Over 6-inches in Diameter Under Landscaped Areas - Coarse Aggregate Bedding compacted to 98 percent.

B. Downspout Conduits
1. Plastic Pipe: 4-inch diameter unless otherwise indicated.
2. Bedding
    a. Under Paved Areas - Coarse Aggregate Bedding compacted to 98 percent
    b. Piping 6-inches and Less in Diameter Under Landscaped Areas - Fine Aggregate Bedding compacted to 98 percent.
    c. Piping Over 6-inches in Diameter Under Landscaped Areas - Coarse Aggregate Bedding compacted to 98 percent
3. Cover
    a. Under Paved Areas - Compacted Granular Material
    b. Piping 6-inches and Less in Diameter Under Landscaped Areas - Fine Aggregate Bedding compacted to 98 percent.
    c. Piping Over 6-inches in Diameter Under Landscaped Areas - Coarse Aggregate Bedding compacted to 98 percent.

C. Finger Drains
1. Perforated Corrugated, Polyethelene (PE) Drainage Tubing
2. 6-inch diameter unless otherwise indicated.
3. Bedding: Filtering Material.
4. Cover: Filtering Material

D. Underdrains
1. Perforated Corrugated, Polyethelene (PE) Drainage Tubing
2. 6-inch diameter unless otherwise indicated.
3. Bedding: Filtering Material.
4. Cover: Filtering Material

END OF SECTION 33 41 00