Chapter 8: Systems and Materials

8000 Introduction

Exterior Walls

8110 Masonry Cavity Wall

8112 Metal Panel On Concrete Masonry Wall
8113 Plant-Precast Concrete Insulated Sandwich Wall
8114 Metal Panel on Metal Framing
8115 Metal Panel on Metal Framing
8116 Exterior Wall/Roof Closure

Roofs

8120 Shingle Roof

8121 Shingle Roof System
8122 Metal Roof with Rigid Insulation
8123 Metal Roof with Rigid Insulation
8124 Built-up Roof
8125 Membrane Roof
8126 Recommended Roof Ridge
8127 Exterior Wall System
8128 Recommended Wall-Low Roof

Interior Walls

8130 Steel Stud and Wallboard

Structural

8210 Materials and Systems
8220 Design Criteria/Evaluation

Plumbing

8310 Design Criteria

HVAC

8410 Systems Evaluation
8420 Design Criteria
8430 Systems Description

Technology

8500 Systems

Electrical

8600 Systems

Chapter 8: Systems and Materials (Career-Technical)

8001 Introduction
8116 Manufactured Wall Panels
8126 Metal Roof with Batt Insulation

Plumbing

8311 Design Criteria

HVAC

8421 Design Criteria

Electrical

8601 Systems

PURPOSE

The purpose of this chapter is to provide a design standard and a level of quality for the systems and materials to be incorporated into new buildings for the State School Building Assistance Program.

SYSTEMS

Major building systems such as structural, roof, exterior wall, plumbing, HVAC, electrical, and technology are described. The stated features, components, performance, and end results are required. These are the standards required for new facilities. Systems, other than those referred to in this chapter, will be considered if adequate information, data, calculations, demonstrations, and relative cost information are provided to the Design Professional and subsequently approved by the Ohio School Facilities Commission.

In this Design Manual, no attempt has been made to recommend or describe the means and methods of assembling the various systems.

MATERIALS

With purpose, the materials mentioned in this chapter are generic. No brand or manufacturer's names are stated. Materials other than those mentioned in this chapter, which meet or exceed the characteristics or performance of the stated materials, will be considered, provided adequate information is submitted for approval by the Design Professional and the Ohio School Facilities Commission. Alternate materials which exceed the cost of materials indicated in the Design Manual will be at the school district's cost.

DESIGN CODES AND STANDARDS

It is recommended that all school spaces used primarily by children should be designed in accordance with the new, proposed ADA regulations for children ages 3 through 12. Areas used primarily by students 13 and over and by adults are to be designed in accordance with current ADA regulations. All buildings should adhere to all current codes and standards. Efforts in design should be made to reduce energy consumption to at least 30% below ***ASHRAE 90.1-2007 per appendix G.***

DESIGN FOR SAFETY / SECURITY

Design Professionals and educators are encouraged to embrace the concept known as Crime Prevention Through Environmental Design (CPTED). CPTED encourages planners to include safety elements into a building design at the earliest stages. Examples are administration control at main entrances, avoiding corridors with too many hidden spots, and fewer entrances.

ENERGY USAGE

All systems shall be designed in compliance with ASHRAE STANDARD 90.1 “Energy Standard for Building Except Low-Rise Residential Buildings”, and the energy usage requirements prescribed by the Ohio Building Code and the Department of Energy.

AIR BARRIER SYSTEM

An air barrier system is a collection of special materials applied to the walls and roof of a building to control air movement through the building envelope. To be effective all joints between different materials, cracks, penetrations, etc., must be sealed with airtight and flexible membranes.

Air barrier materials include self-adhering sheets, fluid-applied membranes, spray-applied polyurethane foams, and rigid air barrier materials.

The Commonwealth of Massachusetts was the first state to require air barriers and at least six other states are considering it also. (Refer to Specification Section 072700). There is near consensus that in most all climates, properly installed air barrier assemblies can substantially reduce operating energy costs. Design Professionals are required to incorporate a continuous air barrier system into their projects.

TECHNOLOGY COORDINATION

Design Professional shall coordinate closely with the Technology Designer for an integrated classroom design, to assure all classroom technology systems are accommodated properly in conjunction with architectural designs, such as daylighting. (i.e. proper location for projector, adequate casework for AV equipment, etc.)

The School District's Educational Technology Plan has a direct impact on space planning of technology support rooms. Verify and coordinate Equipment Room (ER) and Telecommunications Room (TR) sizes and locations with the Technology Designer during the programming phase.

Design Professional shall coordinate locations of video display viewing surfaces and methods to control room daylighting with the Technology Designer to achieve a minimum 10:1 contrast ratio.

A. APPLICATION

1. No limitation as to location

B. COMPONENTS

1. Exterior Finish
   a. Masonry veneer

2. ***2"*** Air Cavity ***- Required***

3. Cavity Insulation
   a. Rigid insulation or closed cell polyurethane insulation

4. Air Barrier System (Required) Options include:
   a. Self-adhering sheets
   b. Fluid-applied membranes
   c. Closed-cell polyurethane insulation
   (air barrier transition tape required at masonry control joints)

5. Backup Material
   a. Concrete masonry unit

C. PERFORMANCE

1. Detail roof/wall intersections to provide a continuous air barrier system.

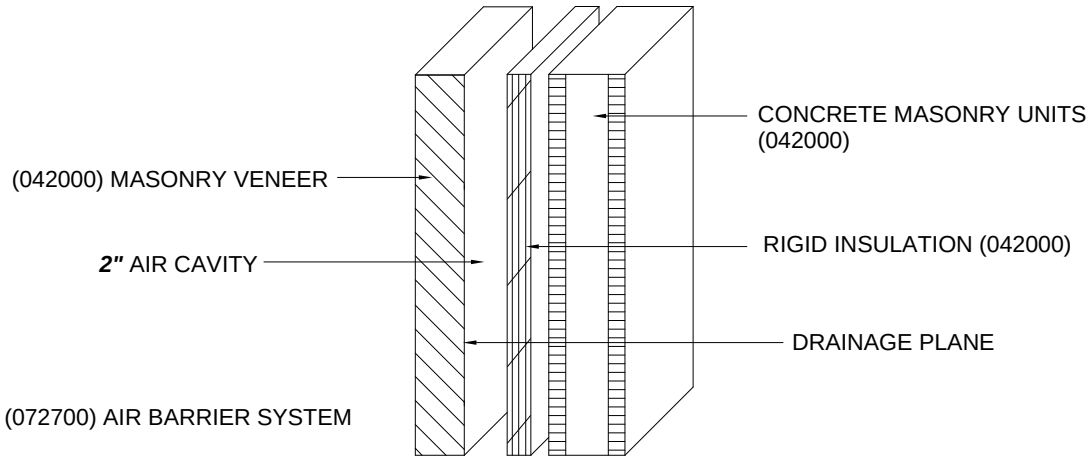

Masonry Cavity Wall
Figure A-1

THIS PAGE HAS BEEN LEFT INTENTIONALLY BLANK.

METAL PANEL ON CONCRETE MASONRY WALL

A. APPLICATION

1. Use of this system shall not exceed 20% of total building exterior vertical wall surface.

B. COMPONENTS

1. Exterior Finish
   a. Metal Panel
2. Rigid insulation
3. Metal Framing/Furring
4. Backup Material
   a. Concrete masonry unit
5. Air Barrier System Required
   (air barrier transition tape required at masonry control joints)

C. PERFORMANCE

1. Detail roof/wall intersection to provide a continuous air barrier system.

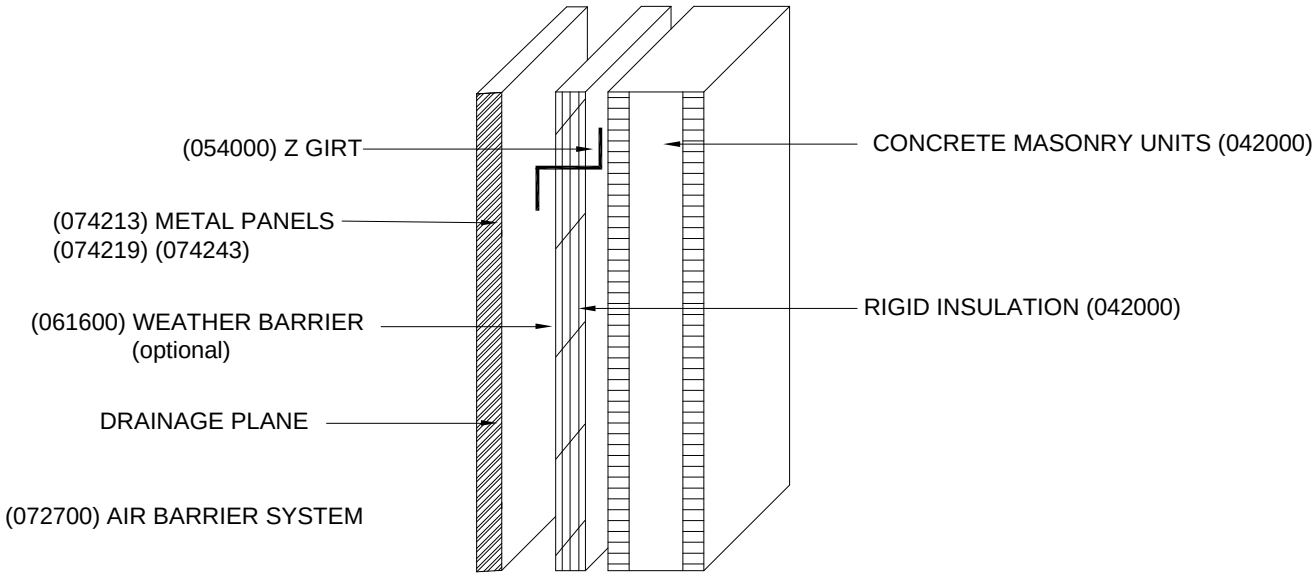

Metal Panel on Concrete Masonry Wall
Figure A-1

EXTERIOR WALLS
PLANT-PRECAST CONCRETE INSULATED SANDWICH WALL

A. APPLICATION

1. Excellent for impact resistance
2. Excellent where large, load-bearing capacities are required

B. COMPONENTS

1. Exterior Finish
   a. Architectural Concrete
2. Cavity Insulation
   a. Rigid Insulation
3. Backup Material
   a. Structural Concrete

C. PERFORMANCE

1. Features
   a. Impact resistant
   b. Moisture resistant
   c. Thermal resistant

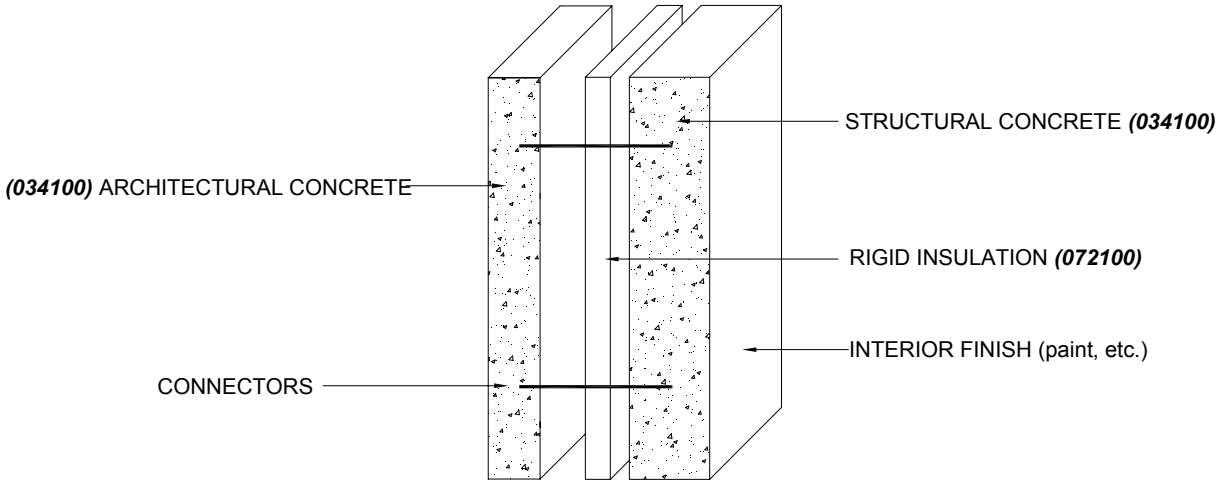

Plant-Precast Concrete Insulated Sandwich Wall
Figure A-1

A. APPLICATION

1. Permitted in spaces, such as mechanical penthouses and other locations where heavy structural loading is not practical.

2. Use of this system shall not exceed 10% of the total building exterior vertical wall surface.

B. COMPONENTS

1. Exterior Finish
   a. Metal Wall Panel

2. Weather Barrier ***(optional)***

3. ***Extruded-Polystyrene-Foam Sheathing***

4. ***Air Barrier System Required***

5. ***Glass-Mat Gypsum Wall Sheathing***

6. Backup Material
   a. Cold-formed metal framing

7. Thermal Barrier (additional)

C. PERFORMANCE

1. Detail roof/wall intersection to provide a continuous air barrier system.

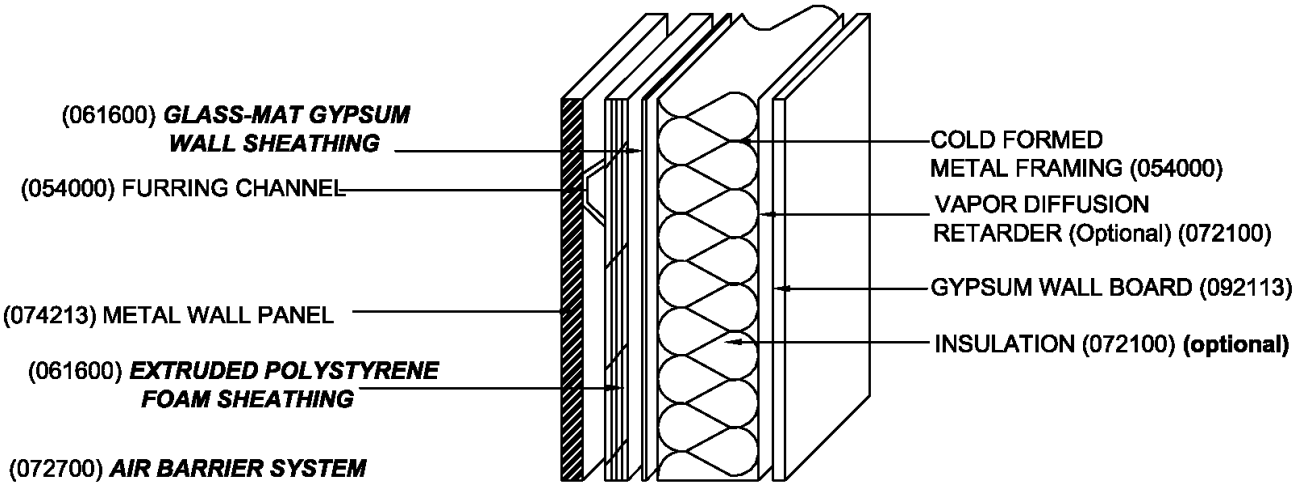

Metal Panel On Metal Framing
Figure A-1

EXTERIOR WALLS

METAL PANEL ON METAL FRAMING

A. APPLICATION

1. Permitted in spaces, such as mechanical penthouses and other locations where heavy structural loading is not practical.

2. Use of this system shall not exceed 10% of the total building exterior vertical wall surface.

B. COMPONENTS

1. Exterior Finish
   a. Insulated Metal Wall Panel

2. ***Air Barrier System Required***

3. Backup Material
   a. Cold-formed metal framing

4. Thermal Barrier ***(additional)***
   a. Batt/blanket insulation (optional)

C. PERFORMANCE

1. Features
   a. Moderately impact resistant
   b. Moisture resistant
   c. Thermal resistant
   d. ***Detail roof/wall intersection to provide a continuous air barrier system.***

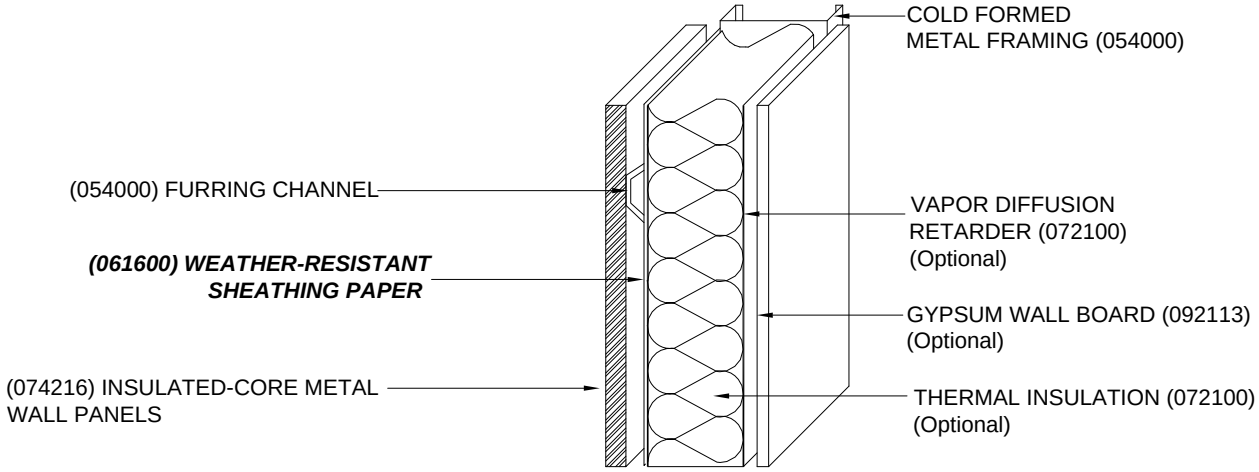

Metal Panel On Metal Framing
Figure A-1

EXTERIOR WALL/ROOF CLOSURE

A. APPLICATION

1. All wall to roof conditions

B. COMPONENTS

1. Roof and Wall Systems – selected by Design Professional
2. Structural System – selected by Design Professional
3. Sprayed-On Insulation
4. Thermal Barrier

C. PERFORMANCE

1. Presents a continuous positive seal against air infiltration

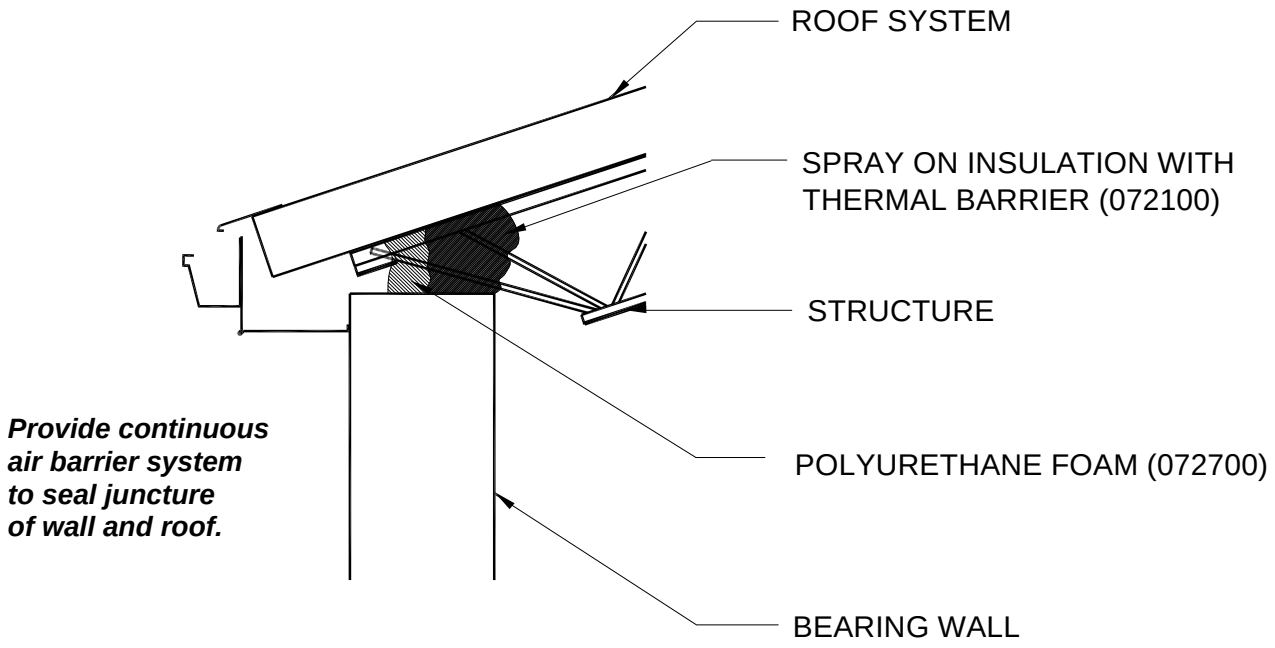

Recommended Exterior Wall/Roof Closure
Figure A-1

THIS PAGE HAS BEEN LEFT INTENTIONALLY BLANK.

A. APPLICATION

1. Steep Roofing
2. Slope - Minimum 4:12

B. COMPONENTS

1. Roof Membrane
   a. Shingles
   b. Underlayment

2. Roof Insulation
   a. (Vented) nailboard insulation
   b. Rigid insulation

3. Vapor Retarder
   a. Where required. Refer to Chapter 9.

4. Structural Support
   a. Steel deck
      or
      Cementitious deck

5. Air Barrier System Required
   a. Self-adhering sheet
   b. Closed-cell polyurethane insulation

C. PERFORMANCE

1. Features
   a. Impact resistant
   b. Moisture resistant
   c. Thermal resistant
   d. Detail roof/wall and roof plane intersection to provide a continuous air barrier system.
   e. Refer to NRCA Roofing Manual: Chapter 3, "Condensation Control & Ventilation for Steep-Slope Roof Assemblies"

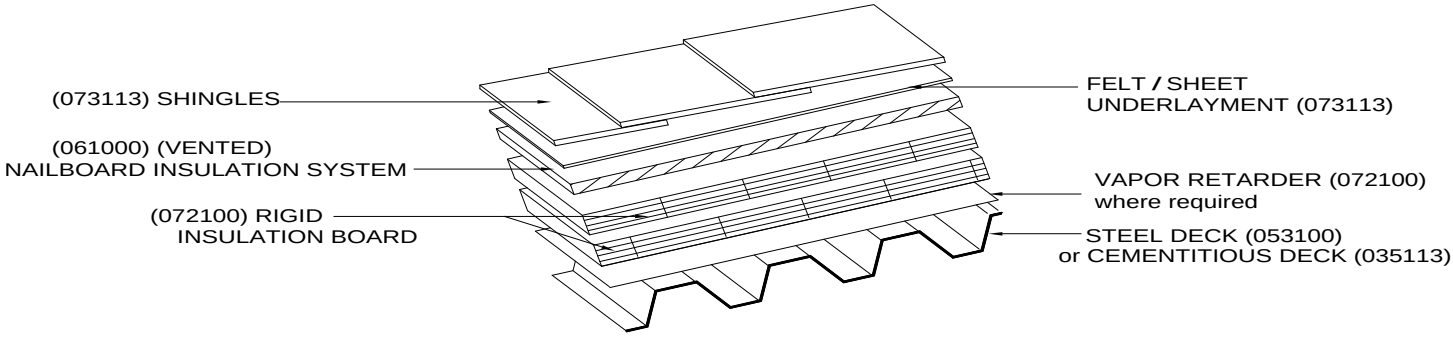

Shingle Roof System
Figure A-1

ROOFS

SHINGLE ROOF SYSTEM

A. APPLICATION

1. Steep Roofing

2. Slope – Minimum 4:12

B. COMPONENTS

1. Roof Membrane
   a. Shingles
   b. Underlayment

2. Roof Sheathing

3. Vapor Retarder
   a. Where required. Refer to Chapter 9.

4. Structural Support
   a. Steel deck or Cementitious wood-fiber deck
   b. Cold-Form Metal Framing (Truss)

5. Thermal insulation with vapor barrier or gypsum board substrate.

6. Air Barrier System Required
   a. Self-adhering sheet
   b. Closed-cell polyurethane insulation

C. PERFORMANCE

1. Features
   a. Impact resistant
   b. Moisture resistant
   c. Thermal resistant
   d. Detail roof/wall intersections to provide a continuous air barrier system.

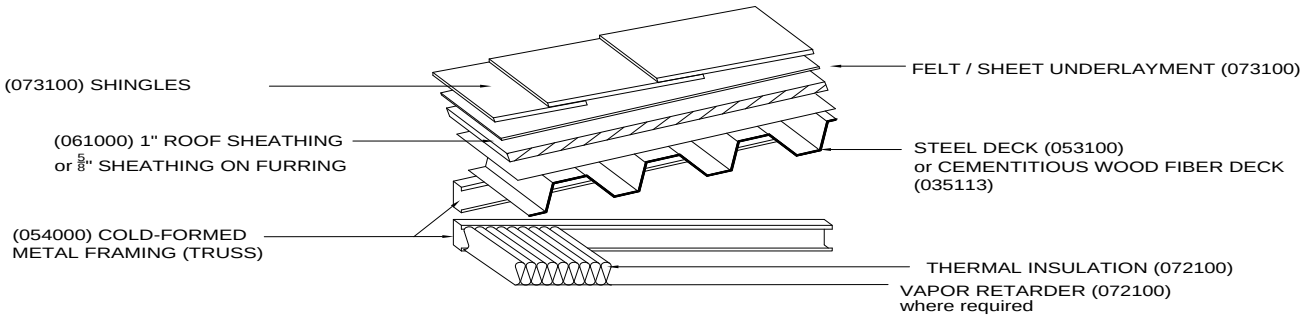

Shingle Roof System
Figure A-1

METAL ROOF WITH RIGID INSULATION

A. APPLICATION

1. Steep Roofing

2. Slope – Minimum 3:12
   2:12 will be considered for uncomplicated roofs

B. COMPONENTS

1. Roof Membrane
   a. Metal roof

2. Roof Insulation
   a. Rigid insulation

3. Vapor Retarder
   a. Where required. Refer to Chapter 9.

4. Thermal Barrier
   a. Where required. Refer to Chapter 9.

5. Structural Support
   a. Steel roof deck
      or
      Cementitious deck

6. Air Barrier System Required
   a. Self-adhering sheet
   b. Closed-cell polyurethane insulation

C. PERFORMANCE

1. Features
   a. Impact resistant
   b. Moisture resistant
   c. Thermal resistant
   d. Detail roof/wall intersections to provide a continuous air barrier system.

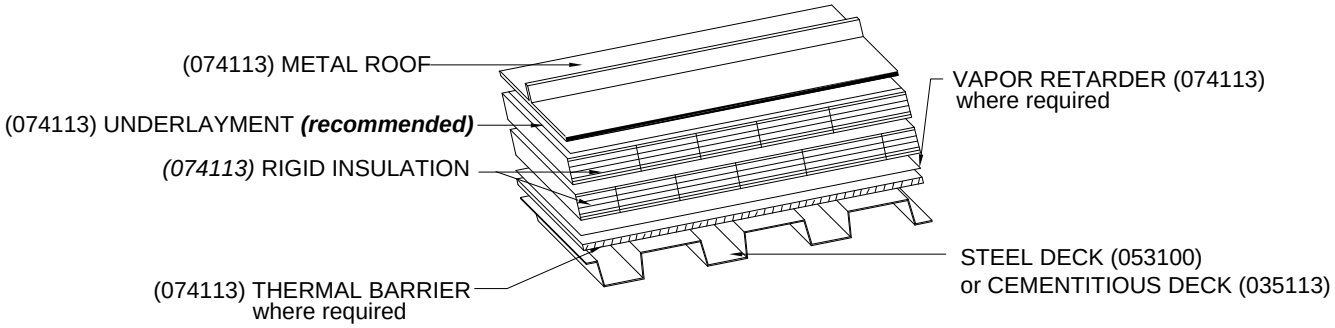

Metal Roof with Rigid Insulation
Figure A-1

A. APPLICATION

1. Steep Roofing
2. Slope – Minimum 3:12

B. COMPONENTS

1. Roof Membrane
   a. Metal roof
2. Sheathing (optional)
3. Vapor Retarder
   a. Where required. Refer to Chapter 9.
4. Structural Support
   a. Steel deck or Cementitious deck
   b. Cold-Form Metal Framing (Truss)
5. Thermal insulation with vapor barrier or gypsum board substrate.
6. Air Barrier System Required
   a. Self-adhering sheet
   b. Closed-cell polyurethane insulation

C. PERFORMANCE

1. Features
   a. Impact resistant
   b. Moisture resistant
   c. Thermal resistant
   d. Detail roof/wall intersections to provide a continuous air barrier system.

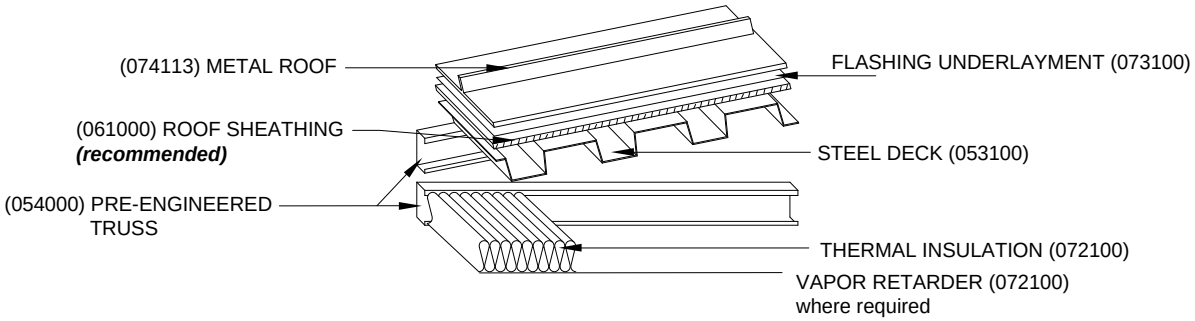

Metal Roof with Rigid Insulation
Figure A-1

A. APPLICATION

1. All low sloped roof areas

2. Slope – Minimum 0.25:12

B. COMPONENTS

1. Roof Membrane
   a. Built-up/polymer modified bitumen

2. Recovery Board

3. Roof Insulation
   a. Rigid insulation

4. Vapor Retarder
   a. Where required. Refer to Chapter 9.

5. Thermal Barrier
   a. Where required. Refer to Chapter 9.

6. Structural Support
   a. Steel deck
      or
      Cementitious deck

7. ***Air Barrier System Required***
   a. Self-adhering sheet
   b. Closed-cell polyurethane insulation

C. PERFORMANCE

1. Features
   a. Impact resistant
   b. Moisture resistant
   c. Thermal resistant
   d. Detail roof/wall intersections to provide a continuous air barrier system.

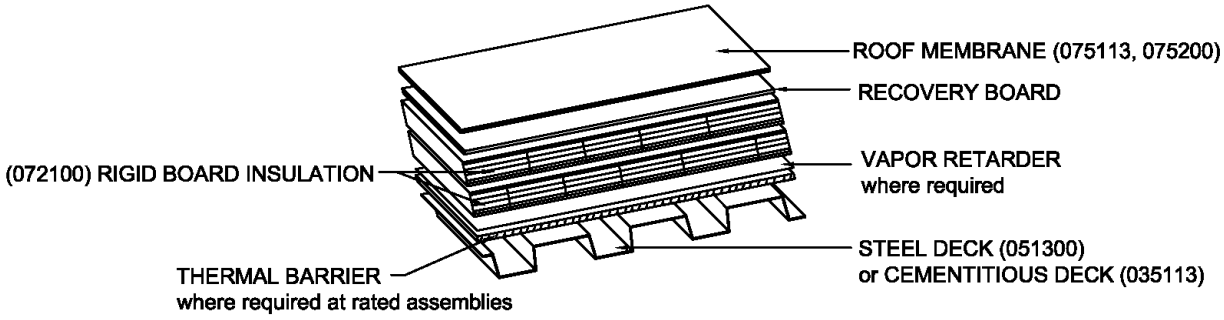

Built-Up Roof
Figure A-1

A. APPLICATION

1. All low sloped roof areas

2. Slope – Minimum 0.25:12

B. COMPONENTS

1. Roof Membrane
   a. Thermoplastic/thermoset

2. Recovery Board/Slip Sheet
   a. Where required. Refer to Chapter 9.

3. Roof Insulation
   a. Rigid insulation

4. Vapor Retarder
   a. Where required. Refer to Chapter 9.

5. Thermal Barrier
   a. Where required. Refer to Chapter 9.

6. Structural Support
   a. Steel deck
      or
      Cementitious deck

7. ***Air Barrier System Required***
   a. Self-adhering sheet
   b. Closed-cell polyurethane insulation

C. PERFORMANCE

1. Features
   a. Impact resistant
   b. Moisture resistant
   c. Thermal resistant
   d. Detail roof/wall intersections to provide a continuous air barrier system.

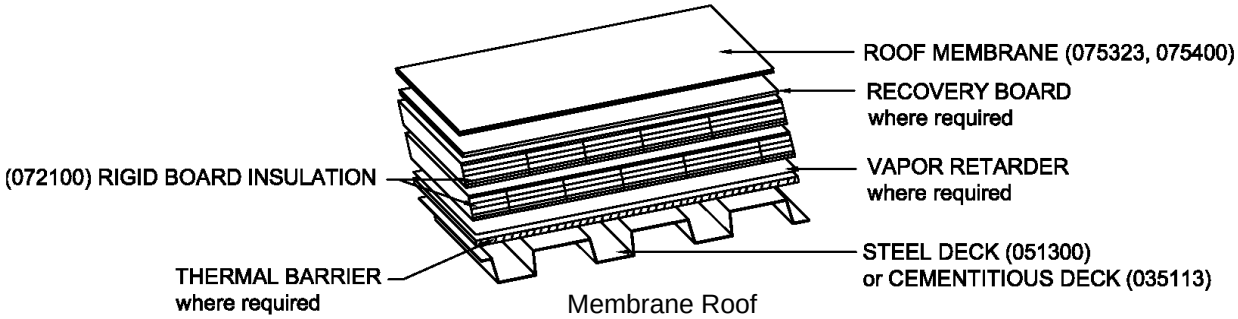

Membrane Roof
Figure A-1

A. APPLICATION

1. All sloped roof ridge conditions.

B. COMPONENTS

1. Roof System - Selected by Design Professional
2. Structural System – Selected by Design Professional
3. Air Barrier System Required
   a. Self-adhering sheets
   b. Close-cell polyurethane spray foam

C. PERFORMANCE

1. Detail roof plane intersections to provide a continuous air barrier system.

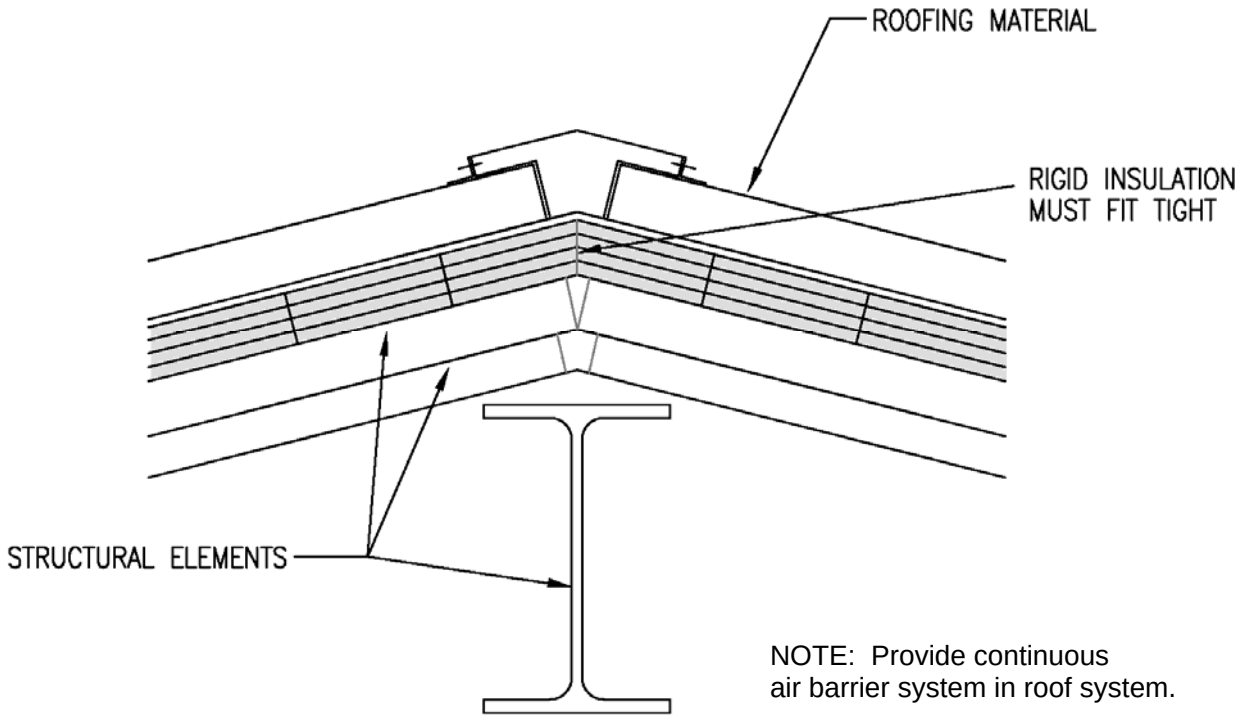

Recommended Roof Ridge
Figure A-1

A. APPLICATION

1. All conditions where cost effective.

B. COMPONENTS

1. Expanded Polysytrene (bead board)
2. Non-Metallic Web-Ties
3. Reinforcing – Selected by Design Professional
4. Varying Widths of Concrete Wall
5. Optional Finishes for Interior and Exterior Faces

C. PERFORMANCE

1. Good insulating and acoustical performance.
2. Ease of installation.
3. Qualifies for LEED credits.

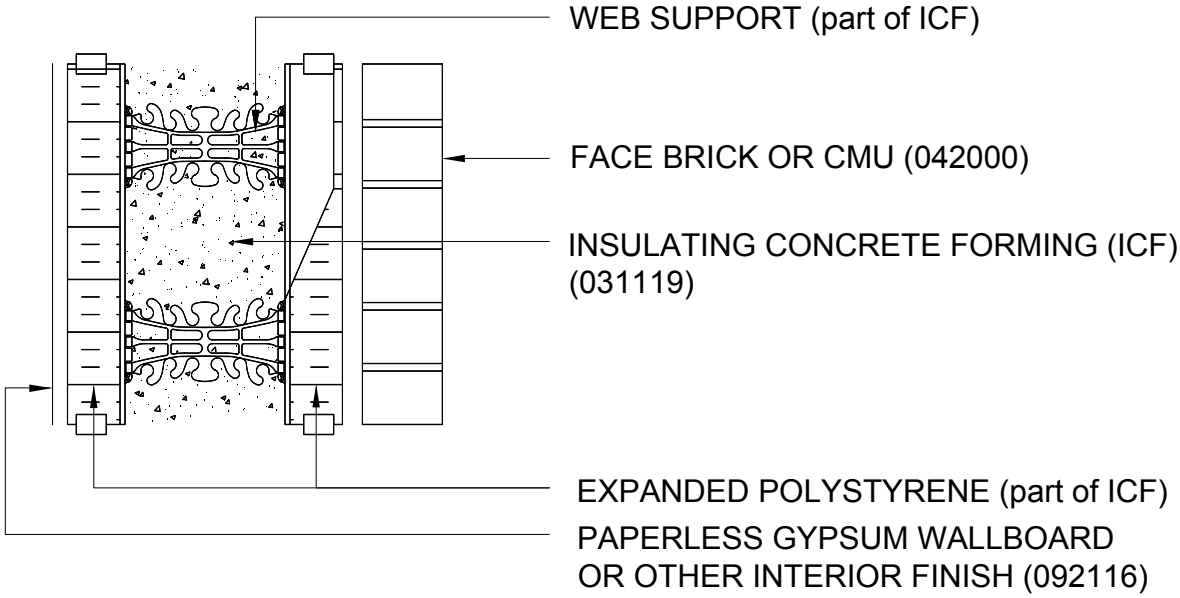

NOTE: HORIZONTAL REINFORCING CAN BE PLACED OVER WEB TIES OR STEEL FIBERS FOR REINFORCEMENT CAN BE USED

Insulating Concrete Forming (ICF)
Figure A-1

A. APPLICATION

1. Low Roof to Vertical Masonry Wall

B. COMPONENTS

1. Roof and Wall Systems - Selected by Design Professional
2. Metal Flashings and Counter Flashings – Selected by Masonry (Sub)Contractor
3. Vertical leg of metal flashing at inside of masonry wall could be anchored with termination bar
4. Air Barrier System Required
   a. Self-adhering sheets
   b. Close-cell polyurethane spray foam

C. PERFORMANCE

1. Prevent water from entering cavity and into interior space.
2. Provides path for water in cavity to exit to exterior.
3. Detail roof/wall intersections to provide a continuous air barrier system.

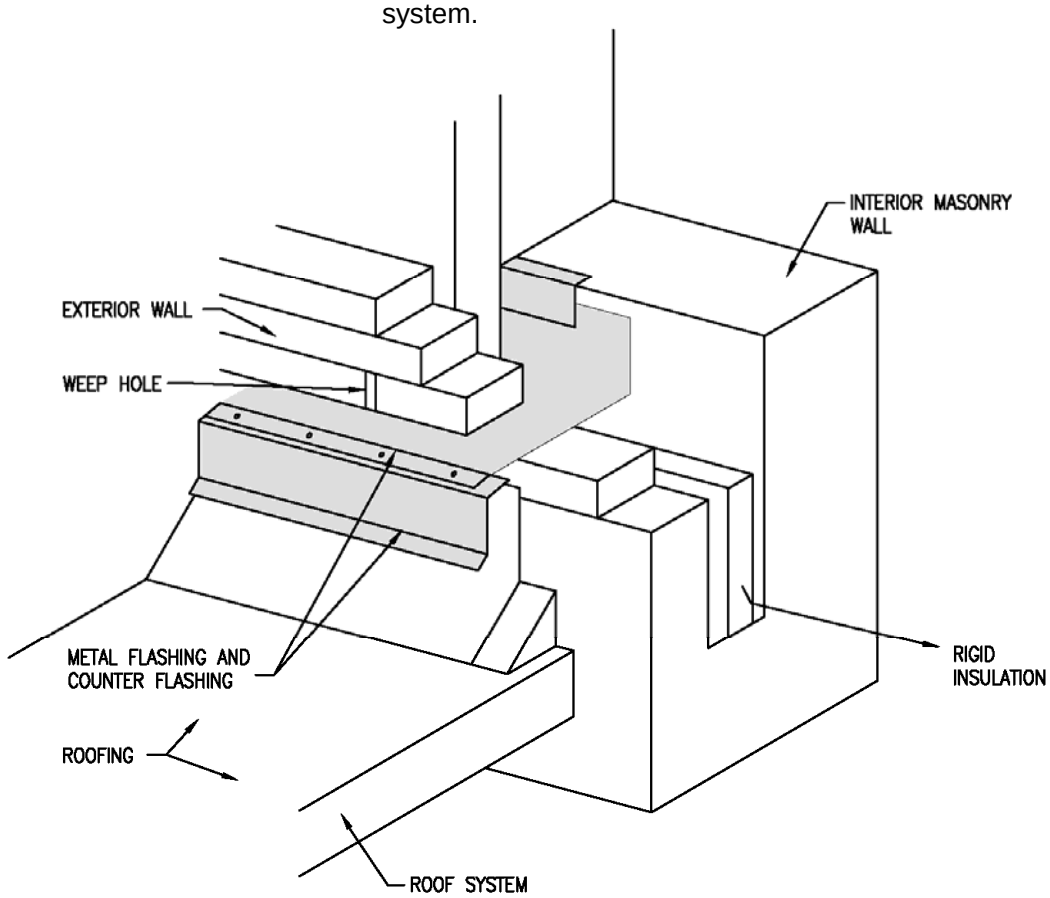

Recommended Wall-Low Roof
Figure A-1

Note: Provide continuous air barrier system to seal juncture of roof and wall.

THIS PAGE HAS BEEN INTENTIONALLY LEFT BLANK.

A. APPLICATION

1. Use only between classrooms, labs, and other academic spaces.
2. For privacy conditions, extend to deck and caulk perimeter.

B. COMPONENTS

1. ***Screw*** attached to studs
2. Fire resistance rating
3. Finish for painting

C. PERFORMANCE

1. Abuse-resistant
2. Acoustically efficient

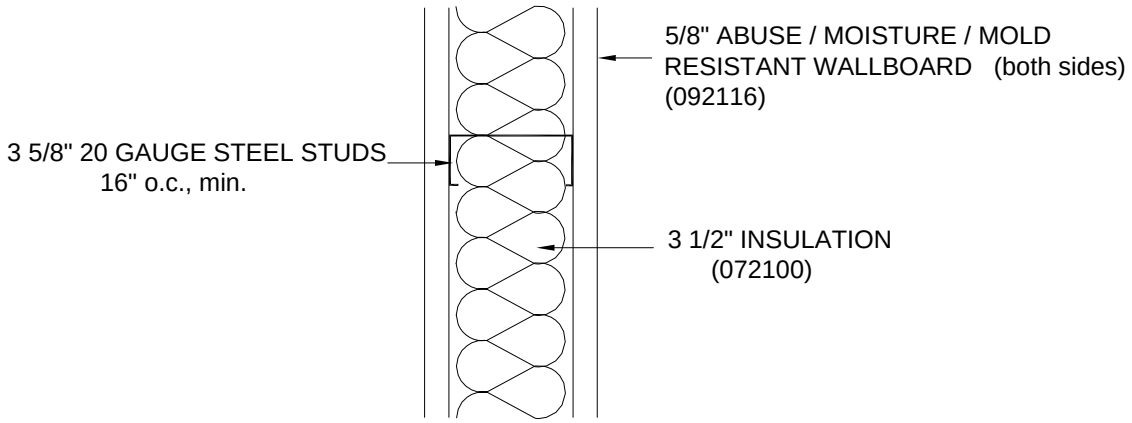

Steel Stud and Wallboard
Figure A-1

THIS PAGE HAS BEEN INTENTIONALLY LEFT BLANK.

1.01 GENERAL

A. The Structural Design Professional shall be responsible for the adequacy, economy, and serviceability of all structures for which he/she is assigned design responsibility. Good engineering judgment shall be used in addition to compliance with all national, local, and applicable codes.

B. School building structures and exterior enclosures shall be designed and constructed of materials which will perform satisfactorily for 40 years, with only minor maintenance and repairs, and for 100 years before major repairs or replacement of primary structural or exterior enclosure elements is required.

C. School buildings shall provide a safe, secure shelter for students, faculty, and staff, generally capable of resisting forces from wind, earthquake, airborne debris, and man-made elements.

D. Structural and building enclosure systems shall be selected on the basis of life cycle costs, safety, durability, constructability, availability of materials, and aesthetic considerations.

1.02 FOUNDATION AND RETAINING STRUCTURES

A. Geotechnical Investigation and Report

1. Geotechnical engineering investigations and reports are required for all new construction and for additions to existing buildings.

2. For all new buildings and all additions larger than 10,000 SF to existing buildings the geotechnical engineering and investigation shall include one boring of sufficient depth to accurately evaluate the Site Class in accordance with Article 1615.1.1 of the Ohio Building Code. If a test boring is not made to a depth of 100 feet, the Geotechnical Engineer is permitted to estimate soil properties below the depth of the boring based on the information obtained from the borings and known geological formation.

3. For all new buildings 10,000 SF and smaller, Site Class D shall be used, unless Site Class E or F soil is likely to be present at the site.

4. Shear Wave Velocity tests shall be required only where the size of the project, the potential construction cost savings, and the likelihood of the recommendation of a Site ***Class C*** or less is considered probable.

B. Selection of Foundation Types Shall Be Based On:

1. Recommendations of the Geotechnical Engineer

2. Economical comparison of foundation systems when the Geotechnical Engineer offers foundation alternatives.

3. Soil design strengths, criteria, and loads

1.02 FOUNDATION AND RETAINING STRUCTURES (cont'd)

4. Deep foundations when recommended by the Geotechnical Engineer, and when more economical than shallow foundations

5. Shallow foundations when recommended by the Geotechnical Engineer, and when determined to be more economical than deep foundations

   a. Spread and wall footings
      1) Earth-formed footings shall be considered where cohesive soil is encountered and the sides of the excavation can be cut true and maintained through the concrete placement.
      2) Earth-formed excavations shall be to a tolerance of +6 inches, -0 inches.
      3) Formed footings shall be used in granular soil and where the sides of the excavation cannot be cut true and maintained through the concrete placement.
      4) Minimum concrete compressive strength of ***3,000 psi*** at 28 days
      5) Minimum reinforcing according to American Concrete Institute 318

   b. Trenched footings shall be considered where:
      1) Recommended by the Geotechnical Engineer
      2) Cohesive soil is encountered
      3) Sides of the excavation can be cut true and maintained through the concrete placement
      4) The footing can be combined with the foundation wall in one structural element
      5) Minimum concrete compressive strength of ***3,000 psi*** at 28 days
      6) Minimum reinforcing according to American Concrete Institute 318
      7) Excavation shall be to a tolerance of +6 inches, -0 inches.

   c. Reinforced concrete foundation walls
      1) Minimum concrete compressive strength of 4,000 psi at 28 days
      2) Minimum reinforcing according to American Concrete Institute 318

   d. Reinforced and fully grouted concrete masonry foundation walls
      1) Minimum design flexural strength of 1,500 psi at 28 days
      2) Use normal weight concrete masonry unit (CMU) for buried foundation walls
      3) Grout all concrete masonry unit cores
      4) Minimum reinforcing in accordance with reinforced masonry criteria in American Concrete Institute 530, American Society of Civil Engineers 6, and TMS 402.

   e. Other special foundation systems may be used if acceptable to the Geotechnical Engineer and the Structural Design Professional.

1.02 FOUNDATION AND RETAINING STRUCTURES (cont'd)

C. Retaining Structures

1. Reinforced concrete retaining walls
   a. Minimum concrete compressive strength of 4,000 psi at 28 days if exposed to exterior
   b. Minimum concrete compressive strength of 4,000 psi at 28 days if within a building enclosure
   c. Use 6 percent (+/- 1.5%) air entrainment for exterior concrete
   d. Minimum reinforcing in accordance with American Concrete Institute 318
   e. Minimum concrete cover of reinforcing steel in accordance with American Concrete Institute 318
   f. Space vertical control joints at 25 feet on center or less. Extend horizontal reinforcing through control joints.
   g. Space vertical expansion joints at 75 feet on center or less. Stop horizontal reinforcing at each side of expansion joints and provide a full-height keyway. Install 1 inch thick minimum preformed joint material in expansion joints.

2. Reinforced concrete masonry retaining walls
   a. Minimum design flexural strength of 1,500 psi at 28 days
   b. Grout all concrete masonry unit cores below grade
   c. Use 9-gauge ***W1.7 or 0.148 inch*** hot dipped galvanized, horizontal joint reinforcing at maximum spacing of 8 inches
   d. Use vertical reinforcing at maximum spacing of 48 inches
   e. Locate reinforced bond beams at top of wall and at maximum vertical spacing of 12 feet
   f. Minimum reinforcing in accordance with American Concrete Institute 530, American Society of Civil Engineers 5, and TMS 402 as "reinforced masonry"
   g. Space vertical control joints at 24 feet on center or less. Extend horizontal reinforcing through control joints.
   h. Space vertical expansion joints at 72 feet on center or less. Stop horizontal reinforcing each side of expansion joints.
   i. Use normal weight concrete masonry units.

3. Proprietory unit masonry retaining walls may be used if recommended and certified by the Structural Design Professional, or if accepted by the school district and the Ohio School Facilities Commission on the basis of certification of the system by a Professional Engineer selected by the manufacturer of the system.

4. Steel sheet piling may be used in lieu of concrete or masonry retaining walls where acceptable to the Geotechnical Engineer, the Structural Design Professional, and the school district.

1.03 ROOF FRAMING SYSTEMS

A. General

1. Use American Institute of Steel Construction, Type 2 "simple framing" systems with shear walls or braced frames wherever possible.

2. Use columns and beams, where possible, rather than masonry bearing walls for interior lines of support in classroom areas to allow for maximum flexibility for future use of these spaces.

3. Preferably, use concrete masonry and reinforced concrete backup for exterior walls of educational, corridor, and physical education spaces.

4. The use of light-gauge framing shall be avoided for exterior walls in educational and physical education areas of buildings, but should be considered for interior walls and for exterior walls for administrative areas, or where used as a finish on the space plate.

B. Steel Roof Deck on Open Web Steel Joists

1. Roof deck
   a. Minimum galvanizing ASTM A525, G60 (60 ounces per square foot)
   b. Minimum 22-gauge deck
   c. Use puddle welds, self-tapping screws, or pneumatic fasteners ***(rivets)*** to attach deck to supporting structural steel members.

2. Open web steel joists
   a. For roof slopes greater than 1:12, joists shall preferably span parallel to the slope. These joists shall be detailed as special joists.
   b. For roof slopes greater than 1:12, where joists span perpendicular to the slope and are canted, cross bridging shall be used between joists.

C. Cementitious Deck on Steel Subpurlins on Open Web Steel Joists

1. Steel purlins shall be galvanized.

2. Cementitious decks shall be resistant to deterioration due to moisture.

3. Cementitious deck systems shall be certified by a Professional Engineer as being capable of supporting the design loads as shown on the construction documents.

4. The Structural Design Professional shall verify that the purlin and deck system provides adequate lateral bracing for open web steel joists.

5. The Structural Design Professional shall verify that cementitious deck systems provide required diaphragm strength.

1.03 ROOF FRAMING SYSTEMS (cont'd)

D. Composite Deck

1. Where shingle roofing is to be used, composite roof systems consisting of metal deck, rigid insulation, and mineral (nonorganic) nail base connected so as to produce composite action between the material shall be considered in lieu of wood sheathing over rigid insulation.

E. Prefabricated wood trusses with plywood or particleboard sheathing shall not be used for roof systems.

F. Glue laminated beams with wood decking shall not be used for roof systems.

G. Precast concrete roof systems may be used where justified based on cost comparisons with other systems, fire-resistance, and impact on the design of supporting structural elements.
1. Prestressed single and double tees
2. Precast plank

H. Light-gauge metal framed or light-gauge metal truss framed roof systems may be used for roof systems.

I. Plywood and oriented strand board shall not be used as structural roof deck.

1.04 FLOOR FRAMING SYSTEMS

A. Metal Deck/Concrete Slab

1. Comply with SDI *Design Manual (Publication No. 27)*

2. Concrete on steel form deck
   a. Concrete Deck Fill; minimum compressive strength of ***3,500*** psi at 28 days
   b. Use minimum reinforcing of 0.0018 of the area of concrete.
   c. Fibrous reinforcement shall not be substituted for welded wire fabric or deformed bar reinforcement, but may be used in addition.
   d. Use G60 galvanized deck

3. Concrete on steel composite floor deck
   a. Concrete deck fill; minimum compressive strength of ***3,500*** psi at 28 days
   b. Use minimum reinforcing of 0.0018 of the area of concrete
   c. Use G60 galvanized deck

4. Cast-in-place flat slabs (1 way or 2 way)
   a. Use minimum compressive strength of ***4,000*** psi at 28 days

5. Precast concrete plank
   a. Use minimum 2-inches of concrete topping with 1.5 pounds per cubic foot of fibrillated polypropylene fibrous reinforcing

1.04 FLOOR FRAMING SYSTEMS (cont'd)

B. Framing Members

1. Open web steel joists
   a. Comply with Steel Joist Institute *Standard Specifications*

2. Composite open web steel joists
   a. Comply with joist manufacturer's design recommendations.
   b. The Professional Engineer shall certify that the system has the capacity to support the design loads shown on the contract documents.

3. Rolled steel members
   a. ***Use ASTM A992, Grade 50; ASTM 572, Grade 50; steel for wide flange shapes***.
   b. Use ASTM A36 or ASTM A572, Grade 50 for angles and plates.

4. Composite rolled beams shall be considered when justified on the basis of cost and serviceability.

5. Precast concrete floor systems shall be considered when justified on the basis of cost, fire-resistance, and impact on the design of supporting members.

C. Columns

1. Steel rolled sections
   a. ***Use ASTM A992, Grade 50; ASTM A572, Grade 50; steel for wide flange shapes.***
   b. Comply with AISC *Manual of Steel Construction*

2. Hollow structural sections (HSS)
   a. Use ASTM A500, Grade B (46,000 psi yield strength) or ASTM A53, Grade B.
   b. Comply with AISC *Manual of Steel Construction*
   c. Comply with AISC *HSS Connections Manual*

3. Reinforced concrete columns
   a. Minimum concrete compressive strength of 3,500 psi at 28 days
   b. Minimum reinforcing of 0.01 percent of the gross area of column
   c. Comply with American Concrete Institute 318 *Building Code Requirements for Structural Concrete*

4. Precast concrete columns
   a. Precast concrete systems shall be certified by a Professional Engineer to be capable of supporting the design loads shown on the construction documents.

5. Masonry columns
   a. Minimum flexural strength of 1,500 psi at 28 days
   b. Minimum reinforcing of 0.005 percent of the gross area of column

1.05 MASONRY WALL SYSTEMS

A. Engineered masonry systems shall be used for load-bearing and shear walls, and are recommended for exterior walls.

B. Minimum reinforcing in exterior walls shall be in accordance with American Concrete Institute 530/American Society of Civil Engineers 5/TMS 402 for either "reinforced masonry walls" or "partially reinforced masonry walls." In no case shall vertical reinforcement in exterior masonry walls be less than the following:

Nominal Wall Thickness	Reinforced Size and Spacing
6"	#3 at 72"
8"	#4 at 96"
10"	#5 at 96"
12" and 14"	#6 at 96"

C. Minimum reinforcing in masonry bearing walls shall be in accordance with American Concrete Institute 530/American Society of Civil Engineers 5/TMS 402 for either "reinforced masonry walls" or "partially reinforced masonry walls." In no case shall vertical reinforcement in masonry bearing walls be less than the limits shown for exterior masonry walls.

D. Minimum horizontal joint reinforcing in interior walls shall be 9-gauge ***W1.7 or 0.148 inch*** horizontal joint reinforcing at 16-inch spacing vertically.

E. Minimum horizontal joint reinforcing in exterior walls shall be in accordance with American Concrete Institute 530/American Society of Civil Engineers 5/TMS 402 for “reinforced masonry walls.” Use reinforced masonry bond beams to supplement the area of reinforcing steel furnished by horizontal joint reinforcing to meet the minimum reinforcing requirements.

F. Floor and roof members supported by load-bearing masonry shall bear on bond beams with embedded bearing plates designed to resist bearing, uplift, and lateral loads. Anchor rods on bearing plates shall be a minimum of two 1/2-inch diameter headed studs or two #3 hooked anchor rods with 6-inch embedment.

1.06 LATERAL BRACING SYSTEMS

A. Reinforced Concrete

1. Minimum concrete compressive strength of 3,500 psi at 28 days

2. Use minimum reinforcing in accordance with American Concrete Institute 318

B. Masonry Shear Walls

1. Masonry shear walls shall be reinforced in accordance with American Concrete Institute 530/American Society of Civil Engineers 5/TMS 402 as “reinforced masonry walls.” In no case shall vertical reinforcement for masonry shear walls be less than that shown for exterior masonry walls.

1.06 LATERAL BRACING SYSTEMS (cont'd)

2. Vertical reinforcing shall be lapped with dowels projecting from the footing.

3. Attachment of steel frames to masonry shear walls shall be through embedded or adhesive anchor bolts in fully grouted or solid masonry units. Expansion or wedge anchors shall not be used to attach steel frames to masonry shear walls.

C. Steel

1. Wide flange shapes
   a. ***Use ASTM A992, Grade 50; ASTM A572, Grade 50***

2. Hollow Structural Sections (HSS)
   a. Use ASTM A500, Grade B (46,000 psi yield strength) or ASTM A53, Grade B.

3. Rods, clevises, and turnbuckles
   a. Use ultimate safeties factor of not less than 4.5:1 for the manufacturer's breaking load.

4. Angles and plates
   a. Use ASTM A36 or ASTM A572, Grade 50.

1.07 SLABS ON GRADE

A. Comply with American Concrete Institute SCM-25 *Concrete Slabs on Grade*

B. For classroom and corridor areas, use a minimum 4-inch thick concrete slab with 6 by 6-W1.4 by W1.4 welded wire fabric.

C. Concrete minimum compressive strength of 3,500 psi at 28 days

D. Consider design recommendations for preventing elevated radon levels in new buildings as prescribed in the EPA booklet "Radon Prevention in the Design and Construction of Schools and Other Large Buildings". (EPA/625/R – 92/016, Jan. 1993)

1.08 LINTELS

A. Lintels in exterior walls consisting of angles, tees, and wide flange shapes, 8 inches or less in depth and 12 feet or less in length, shall be hot-dipped galvanized in accordance with ASTM A123, Grade 65 (1.5 ounces per square foot).

B. Steel lintels in exterior walls, consisting of members larger than 8 inches in depth and 12 feet in length, shall be mill galvanized in accordance with ASTM A641.

C. Steel lintels, other than angles supporting masonry, shall have rigid masonry anchors or dowels at 32-inch maximum spacing to secure masonry to steel.

D. Reinforced masonry or concrete lintels shall be used in exterior walls wherever possible.

END OF SECTION

1.01 GENERAL

A. Structural systems shall be selected during the early stages of the Design.

B. Structural systems shall be designed in strict conformance with national, state, and local codes and with current structural material codes and specifications.

C. Structural design calculations shall be performed for major structural members.

1.02 FOUNDATIONS AND RETAINING STRUCTURES

A. Geotechnical Investigation and Report

1. Geotechnical investigations and reports shall be accomplished for school projects involving new construction on foundations of 5,000 square feet and larger.

2. For school projects involving less than 5,000 square feet of foundation construction, as an addition to an existing building, additional geotechnical investigations and reports may be waived, if permissible by Code, considering the following:
   a. Foundation systems are comparable to those employed in the existing construction, without significant observed foundation problems.
   b. Where alternate foundations systems to those existing, as selected by the Structural Design Professional, exhibit reasonable expectation for successful performance, and
   c. Consideration has been taken to rectify any current, observed foundation system design deficiencies from existing adjacent construction.

3. Where foundation system design is based upon presumed soil conditions, the following shall be included in the Construction Documents:
   a. Structural Design Professional shall identify all pertinent soil strength criteria used in his design within the Contract Documents.
   b. Soil bearing capacity values shall be verified in writing during construction by a registered Geotechnical Engineer, confirming such conditions.

1.03 *ROOF* FRAMING SYSTEMS

A. Roof systems shall be designed in strict conformance with national, state, and local codes and with current structural material codes and specifications.

B. Steel Roof Deck on Open Web Steel Joists

1. Roof deck
   a. Design in accordance with SDI *Design Manual (Publication No. 27)*
   b. Design deck as a diaphragm in accordance with SDI *Diaphragm Design Manual*

1.03 *ROOF* FRAMING SYSTEMS (cont'd)

2. Open web steel joists
   a. Design in accordance with SJI *Standard Specifications and Load Tables*
   b. Design low slope or flat joists to resist ponded water in accordance with SJI *Technical Digest #3 - Ponding*
   c. Supplier of joists shall furnish certification by a Professional Engineer that joists comply with SJI *Standard Specifications and Load Tables*

3. Steel framing members
   a. Design in accordance with AISC *Manual of Steel Construction*

C. Cementitious Deck and Composition Deck on Steel Subpurlins on Open Web Steel Joists

1. Systems shall be certified, by a Professional Engineer, to be capable of supporting the design loads as shown on the Construction Documents.

1.04 FLOOR FRAMING SYSTEMS

A. Deck/Slab

1. Concrete on steel form deck
   a. Design in accordance with Steel Deck Institute *Design Manual*
   b. Design deck/slab as diaphragm in accordance with Steel Deck Institute *Diaphragm Design Manual*

2. Concrete on steel composite floor deck
   a. Design in accordance with Steel Deck Institute *Design Manual*
   b. Design deck/slab as diaphragm in accordance with Steel Deck Institute *Diaphragm Design Manual*

3. Cast-in-place flat slabs (1 way or 2 way)
   a. Design in accordance with American Concrete Institute 318

4. Precast concrete plank
   a. Design in accordance with ACI 318 and PCI *Prestressed Concrete Design Handbook*

B. Horizontal Framing Members

1. Open web steel joists
   a. Design in accordance with SJI *Standard Specifications*
   b. Floor Vibrations
      1) Design of floor members shall include consideration of the relative perceptability of floor vibrations based on the use of the space.

1.04 FLOOR FRAMING SYSTEMS (cont'd)

2) Floor vibration analysis and design shall generally conform to the "Criteria for Human Comfort" as indicated in Figure 2.1 in the AISC "Steel Design Guide Series II – Floor Vibrations Due to Human Activity".

c. Verify that standard camber in joists is accurate for anticipated dead load deflection and that any residual camber does not significantly reduce capacity of floor deck. Specify nonstandard camber where required.

d. Joists shall be certified by a Professional Engineer as capable of supporting the design loads as shown on the construction documents.

2. Composite open web steel joists
   a. Design in accordance with joist suppliers design criteria.
   b. The joist manufacturer shall furnish certification by a Professional Engineer that composite joists are capable of supporting design loads as shown in the contract documents.

3. Rolled steel beams and channels
   a. Design in accordance with AISC *Manual of Steel Construction and Specifications*
   b. Specify camber for all rolled steel members in floor systems requiring ½ inch camber or larger.

4. Composite rolled beams and channels
   a. Design in accordance with AISC Manual of Steel Construction and Specifications
   b. Composite rolled shapes shall be used where floor vibration is considered by the Design Engineer as being an important serviceability criteria.

5. Precast concrete beams
   a. Design in accordance with American Concrete Institute 318 and PCI *Prestressed Concrete Design Handbook*

C. Columns

1. Steel rolled sections
   a. Design in accordance with AISC *Manual of Steel Construction*

2. Hollow structural sections
   a. Design in accordance with AISC *Manual of Steel Construction*
   b. Detail connections in accordance with AISC *HSS Connections Manual*

3. Reinforced concrete columns
   a. Design in accordance with American Concrete Institute 318
   b. Reinforced concrete columns shall be used where practical for columns exposed to the weather and the use of deicing salts.

1.04 FLOOR FRAMING SYSTEMS (cont'd)

4. Precast concrete columns
   a. Design in accordance with American Concrete Institute 318 and PCI *Prestressed Concrete Design Handbook*

5. Masonry columns
   a. Design in accordance with American Concrete Institute 530/ASCE 5/TMS 402 and National Concrete Masonry Association *Design Specifications*

D. Floor Vibrations

1. Design steel floor systems to generally conform to the Acceptance Criteria for Human Comfort as indicated in Figure 2.1 in the AISC, "Steel Design Guide Series 11, Floor Vibrations Due to Human Activity."

2. Analyze steel framed floor systems using the procedures in the AISC, "Steel Design Guide Series 11, Floor Vibrations Due to Human Activity."

3. Precast concrete floor systems designed for normal stress or strength criteria are generally within acceptable limits for floor vibrations.

1.05 MASONRY WALL SYSTEMS

A. Engineered masonry design procedures shall be used for all masonry elements in load-bearing, exterior enclosures and shear walls in school buildings.

B. Empirical masonry design procedures shall not be used for load-bearing, exterior enclosure walls and shear walls.

C. Design all exterior, load-bearing and shear walls for moments, shears, and axial stress or capacity criteria in accordance with American Concrete Institute 530/ASCE 5/TMS 402 as reinforced masonry walls.

1.06 LATERAL LOAD SYSTEMS

A. The Structural Design Professional shall ensure that code-required lateral loads are applied to the structure and that systems and connections between systems are adequate to transmit the loads to the ground.

1. Seismic load resisting systems shall be designed and detailed in accordance with the current provisions from the Ohio Building Code and standard provisions from the materials code for that system (i.e. American Concrete Institute, American Institute of Steel Construction, etc.) Seismic Use Group, as defined in OBC Section 1616.2 shall be Group II ***minimum.***

2. Wind loads shall be based upon the current provisions of Ohio Building Code, using a minimum wind speed of 90 mph (3-second gust), unless local weather data supports higher wind loads.

3. Importance factors for Snow load and Wind load shall be obtained from OBC Table 1604.5, using Category II structure (minimum).

1.07 SLABS ON GRADE

A. Design in accordance with American Concrete Institute 318 and American Concrete Institute SCM-25 *Concrete Slabs on Grade*.

1.08 LINTELS

A. Design all lintels supporting masonry to limit deflection to ***1/600*** of the span or ***0.3"***, whichever is smaller.

B. Design steel lintels in accordance with AISC *Manual of Steel Construction and Specifications.*

C. Design masonry lintels in accordance with ACI530/ASCE 5/TMS 402.

THIS PAGE HAS BEEN LEFT INTENTIONALLY BLANK.

1.01 GENERAL

A. This section establishes the minimum design requirements that must be met by the Plumbing Design Professional. Local codes and standards may take precedence over these requirements.

1.02 SITE DESIGN PARAMETERS

A. Determination of the available site services with regard to gas service, sanitary systems, domestic water system, and fire suppression system is necessary as a part of the site selection process. Refer to Chapter 3, Site Design, for additional information.

B. The building plumbing system design is to be complete to 5 feet outside the perimeter of the building foundation system. There may be some exceptions to this requirement for placement of food service grease interceptors, science room acid neutralizing sumps, water services, gas piping and regulators, and storm water structures. In these cases, the piping structures will be included as part of the building plumbing system design.

C. The Plumbing Design Professional is required to evaluate the need and method to provide gas service to the building. If natural gas service is not available, the installation of liquid propane gas should be investigated. The estimated gas loads for operation of the heating water boilers, domestic water heaters, food service equipment, science program usage, and miscellaneous items are obtained from the appropriate disciplines by the Plumbing Design Professional and totaled with the inclusion of a 10 percent safety factor. Discussion with the local gas company is necessary, both to determine potential service costs and to determine the responsibilities of the building owner and the gas company regarding installation. It is also important to determine the gas pressure requirements for the equipment in the building and communicate this need to the gas company. The Plumbing Design Professional shall design the gas service.

1.03 POTABLE WATER SYSTEM

A. All buildings shall include a potable domestic water system serving all sinks, toilets, showers, food service, custodial needs, hose bibbs, heating and chilled water plant fill systems, and drinking water coolers/fountains. All municipal domestic water entering the building must pass through a reduced pressure backflow preventer to protect the outside water source from contamination in the building. A main pressure-reducing valve is required if the incoming water pressure exceeds 80 psi.

B. Water distribution throughout the facility will be through piping systems located above ceiling areas. Piping installed under slab areas will not be permitted, unless accessible for maintenance on the system. Cross-linked polyethylene (PEX) hot and cold water piping will be acceptable under slab if it is installed in a conduit or sleeve stubbed above the floor. Piping under floor is permitted to be connected to the floor drains/trap primer connections.

C. Domestic water systems within the building shall be copper tubing. The use of polyvinyl chloride, chlorinated polyvinyl chloride, polyethylene, or polybutylene material will not be permitted. ***An option to the copper pipe is polypropylene SDR 11 (cold water) and SDR 7.4 (hot water supply and return). Piping in ceiling plenum spaces shall have an approved foil fire wrap.***

1.03 POTABLE WATER SYSTEM (cont'd)

D. Water piping and gas piping to island sinks shall be in an accessible trench in the floor with a removable cover.

E. The required pressure for operation of the furthest fixture from the incoming service will determine if a pressure booster system will be required. The booster system should be a packaged unit that includes all controls. Provide a constant-speed or VFD drive duplex pump package with bladder-type compression tank to meet the flow requirements. It will be necessary to consider the installation of an emergency power system in order to maintain the operation of the booster system in the event of power outages, if the building is to be used during emergency-type occupancies. Coordination with the Electrical Design Professional will be necessary. Minimum pressure required at the furthest fixture connection shall be 30 psi.

F. Insulate the piping to minimum requirements of current ASHRAE 90.1 standard.

1.04 WATER CONDITIONING/SOFTENING SYSTEMS

A. The water shall be tested for quality to determine the makeup of the water including hardness, mineral content, and chemicals. The recommendation for installation of a water conditioning/softening system should be directly related to the results of the water testing. A total hardness of less than 5 grains will not require a softener system.

B. If the water analysis tests recommend softening, the hot water supply shall be softened. The softening of the cold water can be considered if there is a history of mineral build-up in the cold water piping.

C. Review with school personnel before incorporating water softening in the design.

D. Also provide treatment of sulfur, iron, arsenic, or other chemicals if present in the water, per Ohio EPA standards.

1.05 DOMESTIC WATER HEATER SYSTEM

A. Provide life cycle costs analysis for evaluation of the domestic water supply in the building. This evaluation shall apply to proposed central heating with recirculation vs. point of use equipment heating vs. main heating with maintenance cable for group and/or individual restrooms/locker shower rooms and usage of hot water in main portions/wings of the building.

B. A hot water return system with a recirculating pump ***or heat maintenance cable*** shall be required if the building hot water piping is more than 25 feet in length.

C. The on/off operation of the domestic hot water return pumps shall be controlled by a ***7-day*** time clock or the temperature control system.

D. Instantaneous water heaters with a storage tank shall be required for high use applications in buildings with kitchens and/or shower room facilities, or a combination of 2 power vented heaters installed in a common tank could be used. Tank-type water heaters shall be considered for use in elementary school applications having no dishwasher facilities and no locker rooms.

1.05 DOMESTIC WATER HEATER SYSTEM (cont.)

E. The use of thermostatic mixing valves is required to maintain hot water temperature consistent with the plumbing code requirement to hand washing sinks and showers. Use a single valve or a high/low valve system based on minimum and maximum flow rates.

F. An optional application to the building-wide hot water system is the use of a point-of-use instantaneous water heaters for remote locations.

G. An option to the piped hot water return system/pump shall be the hot water temperature maintenance cable system to keep the domestic hot water piping at a consistent temperature. The wiring shall be accessible for repair.

1.06 SANITARY PIPING SYSTEM

A. Piping materials shall include Schedule 40 polyvinyl chloride with solvent joints, cast iron, no hub, or cast iron, hub and spigot. Do not use Schedule 40 polyvinyl chloride piping where water temperatures could exceed 140 degrees F.

B. Fill material around piping below slab shall be compacted granular material to 95 percent-modified proctor. Piping shall not be installed parallel/directly under walls. Minimum parallel distance from a wall to the pipe shall be 3 feet for repair access. See Figure B-1.

Figure B - 1

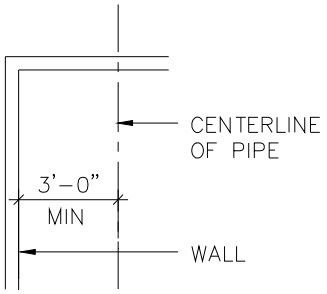

C. Piping above grade shall be Schedule 40 polyvinyl chloride or cast iron, no hub with approved hanger spacing. Piping in a plenum shall be cast iron, no hub. Schedule 40 polyvinyl chloride is not approved for use in a plenum space.

D. Acid waste piping below grade will be Schedule 40 polypropylene with fusion joints or Schedule 40 CPVC chemical waste with solvent weld joints. All acid waste piping above grade shall be Schedule 40 polypropylene with mechanical joints. Acid waste piping in a plenum shall be fire- and smoke-rated polyvinylidene fluoride or glass. Acid neutralizing sumps shall be located on the exterior of the building with access to grade and shall be accessible to staff for ease of inspection and maintenance.

E. Provide information to the Site Design Professional as to the depth of the sewer(s) exiting the building. Provide information to the Structural Design Professional as to the location and depths of the sewer in relationship to footings and columns as they pertain to the project.

1.06 SANITARY PIPING SYSTEM (cont.)

F. Where the temperature of water in the sanitary line can reach 140 degrees, cast iron waste and vent piping shall be installed. Kitchen waste piping is an example.

G. Sanitary sewer cleanouts shall be installed at 50 feet on center up to 4" diameter/ 100 foot on center for 6" diameter and larger, and at changes in direction of 90 degrees or more, at the bottom of vertical risers and as the sewer exits the building.

H. All cast iron piping shall comply with ASTM A 888 (or A 74) and be marked with the collective trademark of the Cast Iron Soil Pipe Institute (CISPI) and be listed by NSF International.

1.07 PLUMBING FIXTURES/PLUMBING SPECIALTIES

A. Water closets shall be china, white, standard flush valve, wall hung, and low water consumption type. Automatic/battery or direct wired flush valve is optional.

B. Urinals shall be china, white, standard flush valve, wall hung, and low water consumption type. Automatic/battery or direct wired flush valve is optional. Waterless-type urinals are acceptable.

C. Lavatories shall have lever handles for hot and cold water. An option to the lever handle faucet shall be a battery or hardwired infrared faucet. Faucets accessible to students shall be infrared sensor battery with the battery and electronics/solenoid built into the spout. Temperature control shall be integral with the faucet or remote mixed.

D. Showers shall be low water consumption, pressure-balanced type.

E. Drinking water coolers/fountains shall be handicap accessible.

F. Sinks shall be 18-gauge, 302 or 304 stainless steel.

G. Science lab sinks shall be connected with acid-resistant material. The science casework manufacturer shall provide sinks.

H. In large group restrooms with 3 or more lavatories, the lavatories can be substituted with a comparably sized wash fountain with infrared sensing.

I. All plumbing fixtures and trim designed or designated for use by the handicapped shall meet the Americans with Disabilities Act guidelines.

J. Water supply (hot and/or cold) to the lavatories, sinks, and drinking fountains shall have angle stops with loose key handles.

K. All lavatories, water closets, and urinals shall have wall carriers.

L. Floor drains shall be installed in each large group restroom, locker room, mechanical room, and kitchen area. Provide a sediment bucket in the floor drain if conditions exist where solids may enter the drain.

1.07 PLUMBING FIXTURES/PLUMBING SPECIALTIES (cont.)

M. Sanitary and storm sewer cleanouts shall be installed at 50 feet on center up to 4" diameter and 100 feet on center for 6" diameter and above, and at changes in direction of 90 degrees or more, at the bottom of vertical risers and as the sewer exits the building.

N. Showers shall have a hot and cold, single lever pressure balancing valve with a vandal-resistant head.

O. Service sinks shall be floor-mounted, molded stone, 10 inches high, with a wall-mounted faucet. ***Hot and cold water supply shall have inline check valves located in an accessible location.***

P. Install a cold water hose bibb in each large group restroom, locker room, and mechanical room. The hose bibb shall be recessed mounted behind a lockable door in restrooms and locker rooms, with access by a removable key handle.

Q. Reduced pressure backflow preventers are required on the water supplies to each HVAC makeup water system.

R. A water pressure reducing station requiring 2 pressure reducing valves sized for 1/3 and 2/3 flow shall maintain the water pressure in the building to a maximum of 80 psi, if the incoming water pressure can exceed 80 psi.

S. Clay traps shall be provided in art rooms or where required to prohibit clay and solids from entering the sanitary sewer. The clay trap shall be accessible to clean out the trap.

T. Trap primers are required at all floor drains. Trap primers shall be accessible for replacement.

U. For elementary schools (K-5) and combination schools (K-8 and K-12), provide a stainless steel, wall mounted drinking fountain which is freeze proof, has push button activation, and is ADA accessible. Mount to the exterior wall.

V. Provide floor drain sinks with hinged covers in custodial closets and the main mechanical room for emptying of the power floor cleaning units, where required by the Owner.

W. Provide an emergency thermostatic mixing valve to provide tempered water to the emergency eye wash and/or showers.

1.08 PLUMBING SYSTEMS FOR FOOD SERVICE AREAS

A. Ware washing system will have a booster heater to provide 180-degree water.

B. Provide 3-compartment sink with 140-degree water.

1.08 PLUMBING SYSTEMS FOR FOOD SERVICE AREAS

C. Provide a grease interceptor to serve the kitchen sanitary waste system laden with grease. The grease interceptor shall be located in the interior if serving one fixture or on the exterior if serving two or more fixtures. The exterior interceptor shall be minimum of 500-gallons. The interceptor shall be sized based on the kitchen grease loading and fixture flow. The interceptor shall meet all State and local codes. The exterior tank shall be fiberglass or concrete and meet traffic loading and shall be located a minimum of 10'-0" from the building.

D. Provide 140-degree water to all kitchen equipment except hand washing lavatories**.**

1.09 BUILDING FIRE SUPPRESSION SYSTEMS

A. All buildings shall have a complete fire suppression (sprinkler) system throughout. Available static water pressure, residual pressure, and water flow must be evaluated as a part of this determination.

B. Installation of a water storage system along with the fire pump installation may be required where insufficient water, flow, and pressure are present.

C. A backflow preventer shall be included on all incoming systems.

D. Provide a fire pump (with water storage tank if necessary) if flow/quantity and/or water pressure cannot be met by the on-site water distribution system.

E. Review seismic requirements as required concerning supports, attachments, pipes, and equipment per NFPA, life safety, and state and local requirements.

1.10 ROOF DRAIN/STORM SEWER SYSTEMS

A. Piping materials shall include Schedule 40 polyvinyl chloride with solvent joints, cast iron, no hub or cast iron, hub and spigot.

B. Fill material around piping below slab shall be compacted granular material to 95 percent-modified proctor. Piping shall not be installed parallel/directly under walls. Minimum parallel distance from a wall to the pipe shall be 3 feet for repair access. See Figure B-1.

Figure B - 2

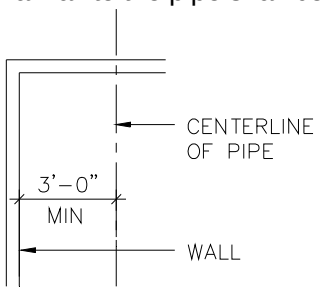

C. Piping above grade shall be Schedule 40 polyvinyl chloride or cast iron, no hub, with approved hanger spacing. Piping above plenum shall be cast iron, no hub. Schedule 40 polyvinyl chloride is not approved for use in a plenum space.

D. Provide connections to all roof drains.

1.10 ROOF DRAIN/STORM SEWER SYSTEMS (cont.)

E. Adherence to state and local plumbing codes will be required.

F. Provide information to the Site Design Professional as to the depth of the sewer(s) exiting the building. Provide information to the Structural Design Professional as to the location and depths of the sewer in relationship to footing and column pass as they pertain to the project.

G. Storm sewer cleanouts shall be installed at 50 feet on center up to 4" diameter/100 foot on center for 6" diameter and larger, and at changes in direction of 90 degrees or more, at the bottom of vertical risers and as the sewer exits the building.

H. Insulate roof drain piping/overflows and vents as required to prevent condensation. Insulate piping and drain body that services condensate from an AHU unit on an upper floor.

I. All cast iron piping shall comply with ASTM A 888 (or A 74) and be marked with the collective trademark of the Cast Iron Soil Pipe Institute (CISPI) and be listed by NSF International.

1.11 GAS PIPING SYSTEMS

A. Gas piping shall be Schedule 40 black steel with screw fittings for piping 1 1/2 inches or less and welded fittings for piping 2 inches or larger.

B. Gas piping in plenums shall not contain valves or unions.

C. A gas regulator shall be provided to maintain the correct inlet pressure to each gas appliance. The inlet and outlet piping to each regulator shall be valved with American Gas Association approved valves.

D. The maximum gas pressure into the building shall be as established by the local gas company. Provide the gas company with the gas load for each appliance, and the minimum and maximum operating pressures for each appliance as early in the design process as possible.

E. Provide a valve and a dirt leg at each appliance connection.

F. LP gas piping shall not be concealed.

G. Natural gas piping to island sinks shall be in an accessible trench in the floor with a removable cover.

H. An alternative to the steel piping for natural gas is the use of corrugated stainless steel tubing with a yellow vinyl outer coating for the final low pressure connection to the gas equipment in an accessible / concealed space not accessible to the student.

1.11 GAS PIPING SYSTEMS (cont.)

I. An option to the Schedule 40 steel piping for natural gas in the plenum space can be corrugated stainless steel tubing up to 2 inches in diameter per NFPA S4 state and local gas company requirements. Also follow manufacturer's installation procedures. Tubing shall be approved for plenum use per ASTM E84.

1.12 VALVING

A. Valves will be installed to isolate individual plumbing fixtures and groups of plumbing fixtures to permit shut down of the fixture or equipment item without affecting the remainder of the building.

B. The domestic water system valves shall be bronze construction with a ball-type conventional port.

C. The gas supply to science rooms and art rooms shall have an emergency solenoid-type, automatic shutoff valve with a manual reset. The purpose of the valve is for shut down of the gas in case of an emergency or when the fire alarm system is activated. A solenoid-type, automatic shutoff valve with a manual reset shall be installed to shut the gas off to the gas fed appliances under the kitchen hood in the event there is a fire under the hood. The valves are designed normally closed and are held open by an electric solenoid valve. A mushroom-type wall switch shall be located in the room for solenoid activation.

1.13 HANGERS

A. Provide hangers for all horizontal, suspended, domestic, water, gas, sanitary, and storm piping with distances as noted in the state and local codes.

1.14 IDENTIFICATION

A. Piping shall be identified in mechanical rooms, unfinished spaces without ceilings, above suspended lay-in acoustical ceilings, and crawl spaces for the type of service and direction of flow. Equipment shall be identified with nameplates.

1.15 TESTING

A. Domestic water, storm and sanitary sewers, sprinkler, air, and gas piping shall be tested per state and local codes.

1.16 ENERGY USAGE

A. All systems shall be designed in compliance with the correct ASHRAE STANDARD 90.1 "Energy Standard for Building Except Low-Rise Residential Buildings", and the energy usage requirements prescribed by the Ohio Building Code and the Department of Energy.

1.17 OPTIONAL SYSTEM COMPONENTS FOR EMERGENCY POWER

A. The intent of connecting emergency power to selected components of the Plumbing System is to avoid system damage from freezing weather and allow life safety equipment to operate during power outages.

B. System Components Requiring Emergency Power:

1. Fire pump

C. Components for Emergency Power:

1. Foundation drainage sump pump.

END OF SECTION

1.01 GENERAL

A. This Design Manual includes four heating, ventilating, and air conditioning systems for consideration. Refer to Section 8430. These systems may be used by the HVAC Design Professional without a detailed evaluation. Systems other than the four systems listed will be considered if a completed evaluation detailing the impact the proposed system has on the annual operating cost of the proposed building, including maintenance costs and installation costs, is submitted for approval by the Ohio School Facilities Commission.

1.02 APPROVED COMPUTER ENERGY PROGRAMS

A. The following programs are acceptable for use in generating a detailed evaluation of proposed heating, ventilating, and air conditioning systems. Further, the building load calculations necessary for the design of each building will require the use of computer--generated data. Equivalent computer programs that are able to generate the necessary data for evaluation of the proposed heating, ventilating, and air conditioning systems and for generation of the building load data will be considered, but must be submitted for approval prior to use.

1. Trane Trace 700

   a. The Trane Trace 700 program is a PC based program used by the HVAC Design Professional for generation of detailed building system air conditioning loads, energy consumption analysis, and economic analysis. The current version can be obtained from the Trane Company, Customer Direct Service (CDS) Network, La Crosse, WI, 608-787-2000.

2. Carrier HAP

   a. The Carrier Hourly Analysis Program is a PC based program used by the HVAC Design Professional for generation of detailed building system air conditioning loads, energy consumption analysis, and economic analysis. The current version can be obtained by contacting the local Carrier equipment representative or by calling Software Systems Network, Syracuse, NY, 315-432-7072.

3. DOE-2.E

   a. The DOE-2.E is a detailed energy analysis program developed through the United States Department of Energy. A number of vendors across the country have developed software that operates to meet the intent of the DOE-2.E program.

1.03 COMPUTER INPUT DATA

A. The following information will be required in the event that a detailed evaluation of a proposed heating, ventilating, and air conditioning system is being prepared by the Design Professional. Portions of this data will be required for use in developing the building load calculations for sizing of system quantities and equipment.

B. Power utility rates for all types of energy to be investigated as part of developing the systems evaluation must be obtained by the HVAC Design Professional from the utilities that will provide service to the new facility. The types of energy should include electricity, natural gas, and fuel oil. It is probable that each fuel will be provided by a different company requiring multiple contacts. It will be necessary to obtain information regarding standard energy costs, demand costs, monthly charges, and time-of-use charges. The use of an interruptible natural gas service is possible and should be investigated. ***Actual utility rates for the facility are to be obtained from the local utility and used in all energy analyses.***

C. Building envelope data will include the following:

1. Exterior wall areas including separate areas for different wall types and exposures
2. All exterior glass areas by exposure
3. Roof areas - including separate areas for different types and exposures.
4. Floor area for overhangs, slab on grade, slabs above unconditioned spaces, etc.

D. Development of a building usage schedule will be required and must be developed through conversation between the school district personnel and the HVAC Design Professional. It will be necessary to obtain detailed information on the following:

1. Length of the school day
2. Community use of areas such as the gymnasium, student dining, and auditeria
3. Expected occupancy of the building, including specific expectations for areas such as the administrative area
4. Proposed summer usage of the facility

Note: The scheduling information is not critical to the development of the building load calculations, rather only for building system evaluation.

E. Occupancy loads and schedules will mirror the building usage schedules. Input occupancy at 90 percent of capacity during normal school hours for classroom areas and the administration area. After hours occupancy can be considered negligible in these areas. Activity areas such as gymnasiums should be calculated at no more than 25 percent of the full load capacity during unoccupied operation. Weekend occupancy loads are to be considered in the activity areas at 25 percent and the administrative areas at 90 percent for Saturday morning usage. Occupancy levels for generation of the building load calculations should be set at 90 percent of maximum capacity for all spaces. Each area (zone) shall be input for 100% occupancy for at least one hour during normal school occupied hours.

Recommended values for heat gain attributed to each occupant in these and similar spaces are as follows:

ACTIVITY/LOCATION	SENSIBLE (Btu/h)	LATENT (Btu/h)
Academic Core area	250	200
Gymnasium - players	710	1,090
Gymnasium - spectators	275	275
Student Dining	275	275

1.03 COMPUTER INPUT DATA (cont.)

F. Lighting systems shall be consistent throughout the building. The lighting load shall be input for consideration as a cooling load only, and should not be used to credit the winter heating load.

The HVAC Design Professional is required to coordinate and review proposed lighting requirements for each building with the Electrical Design Professional prior to generating a final energy load analysis. Usage of the lighting systems should mirror the occupancy scheduling for each area in the building. It will be necessary to maintain a minimum of 5 percent lighting energy throughout the unoccupied times to account for emergency and night lighting. ***The following lighting power densities shall be used to establish the base 90.1 energy model. The proposed lighting power densities must be obtained from the Electrical Design Professional.*** The following denotes maximum lighting load requirements (per the energy code):

BUILDING LOCATION	LOAD (watts/SF)
Academic Core	1.4
Administrative Area	1.1
Gymnasium	1.4
Student Dining	0.9
Media Center	1.2
Locker/Shower Room	0.6
Corridor	0.5
Restrooms	0.9
Electrical/Mechanical	1.5
Library	1.2
Student Dining/Auditeria	1.2

plus a direct load for proposed stage lighting. (coordinate with Electrical Design Professional)

G. Computer locations and expected usage will impact every building designed. All classroom areas will be wired for computers. Include a minimum of 135 watts for each computer station in the building. This load includes the total expected heat gain for a desktop computer and color monitor. Additional loads can be expected for printers and TV monitors, but such loads can be considered negligible regarding the impact on the total building load.

Note: Refer to Chapter 4, Chapter 5, and Chapter 6 for references on equipment requirements and for additional information on quantities.

H. Miscellaneous equipment locations and usage includes equipment in the building such as copiers, refrigerators, microwave ovens, unusual lighting considerations, and general loads throughout the building. The consideration for the loads should be during the occupied time of day only. Miscellaneous loads will be considered negligible during the unoccupied time of day. The following denotes the miscellaneous equipment loads for consideration and the quantity of the load:

TYPE OF EQUIPMENT	AMOUNT OF LOAD
Copiers	400 watts
Refrigerators	500 watts
Microwave ovens	750 watts
Ice makers	*
Kitchen ware washer	*
Kitchen	10 watts per square foot
Stage/Platform area	5,000 watts for lighting

* Refer to ASHRAE handbook of fundamentals for equipment specific heat load.

1.03. COMPUTER INPUT DATA (cont.)

I. The infiltration expectation for each building must be included as part of each building load and energy evaluation. Consider only the effects of infiltration during the unoccupied times of the building. Both cooling and heating infiltration loads must be considered. The entry doors are to be calculated at a minimum of 100 CFM of air infiltration for each 3-foot wide exterior door. Window infiltration is to be considered negligible as to its affect on the building load.

J. The ventilation requirements for the building load are required to adhere to the Ohio Building Code requirements and ASHRAE Standard 62. Specific rates of flow per building occupant as scheduled in Section 8420.

1.04 SYSTEMS EVALUATION REQUIREMENTS

A. In the event a detailed systems evaluation is generated for a proposed heating, ventilating, and air conditioning system, it will be necessary that the evaluation generate cost values for the following specific items. This data will be presented in an organized form ***per ASHRAE 90.1 appendix G*** to the Ohio School Facilities Commission for review and consideration:

1. Installed cost per square foot
2. Annual operating cost per square foot
3. Annual maintenance cost per square foot

1.05 OPTIMIZE ENERGY PERFORMANCE

A. Demonstrate a ***30%*** improvement in the proposed building performance (energy cost) rating compared to the baseline building performance rating per ASHRAE/IESNA Standard ***90.1-2007*** (without amendments) by a whole building project simulation using the Building Performance Rating Method in Appendix G of the Standard.

1. Appendix G of Standard ***90.1-2007*** requires that the energy analysis done for the Building Performance Rating Method include ALL of the energy costs within and associated with the building project. The proposed design:

a. Must comply with the mandatory provisions (Sections 5.4, 6.4, 7.4, 8.4, 9.4, and 10.4) in Standard ***90.1-2007*** (without amendments)

b. Must include all the energy costs within and associated with the building project

c. Must be compared against a baseline building that complies with Appendix G to Standard ***90.1-2007*** (without amendments). The default process energy cost is 25% of the total energy cost for the baseline building. For buildings where the process energy cost is less than 25% of the baseline building energy cost, the submittal must include supporting documentation substantiating that process energy inputs are appropriate. For the purpose of this analysis, <u>process energy</u> is considered to include, but is not limited to: office and general miscellaneous equipment, computers, elevators and escalators, kitchen

cooking and refrigeration, laundry washing and drying, lighting exempt from the lighting power allowance (e.g. lighting integral to equipment) and other (e.g. waterfall pumps). Regulated (nonprocess) energy includes lighting (such as for the interior, parking garage, surface parking, façade, or building grounds, except as noted above), HVAC (such as for space heating, space cooling, fans, pumps, toilet exhaust, parking garage ventilation, kitchen hood exhaust, etc.), and service water heating for domestic or space heating purposes. Process loads shall be identical for both the baseline building performance rating and for the proposed building performance rating. However, project teams may follow the Exceptional Calculation Method (ASHRAE ***90.1-2007*** G2.5) to document measures that reduce process loads. Documentation of process load energy savings shall include a list of the assumptions made for both the base and proposed design, and theoretical or empirical information supporting these assumptions.

THIS PAGE HAS BEEN INTENTIONALLY LEFT BLANK.

1.01 GENERAL

A. The heating, ventilating, and air conditioning system design criteria denoted as a part of this Design Manual have been developed or are obtained directly from accepted engineering design references such as the ASHRAE manuals and standards, the state of Ohio code references, and good engineering practice. The HVAC Design Professional should review each requirement and obtain or develop the necessary information for each specific building before proceeding with the systems evaluation as denoted in Section 8410.

1.02 OUTDOOR AIR DESIGN VALUES

A. Summer and winter outside air design values shall be derived from standard ASHRAE compiled weather data located in the latest edition of the ASHRAE Fundamentals Handbook. The city nearest the proposed construction project is to be selected for evaluation. Use the 99 percent design values for heating design dry-bulb and the 2 percent design values for cooling design dry-bulb and mean coincidental wet-bulb.

B. In addition, it is strongly recommended that outdoor conditions be considered in the overall design where there is a high wet bulb temperature coincident with an outdoor dry bulb temperature equal to the proposed building supply air temperature for any air handling units with ventilation. For instance, address what happens to building indoor humidity levels when the outside air is 75 deg F/90% relative humidity and a 100% outdoor air unit is supplying 75 deg. F supply air to the facility.

1.03 INDOOR AIR DESIGN VALUES

A. Indoor air temperature design values must reflect the need for energy conservation and shall be in accordance with the Ohio Building Code, Mechanical Code.

B. The occupied temperatures used for building load calculations shall be within the range denoted for summer and winter values. The HVAC Design Professional must consider occupant comfort, as well as energy conservation, in selecting the actual temperature for design and operation of the systems. Summer design values shall range from 75 degrees Fahrenheit to 78 degrees Fahrenheit. Winter design values shall range from 70 degrees Fahrenheit to 72 degrees Fahrenheit. The relative humidity of the building spaces shall be targeted at 50 percent during the summer. Humidification in the winter is not required. For mechanical and electrical spaces, the indoor winter design temperature shall be minimum 60 degrees Fahrenheit and the indoor summer design temperature (except for boiler rooms) shall be 85 degrees Fahrenheit.

C. Night setback temperatures shall be used for all systems. Winter setback temperature shall be 55 degrees Fahrenheit. The summer setup temperature shall be 85 degrees Fahrenheit with an additional requirement that the system shall operate as required to maintain a relative humidity in the building area that is between 60 and 65 percent. Maintaining humidity levels below 60 percent will result in the periodic operation of the HVAC system during the summer months to reduce the potential for mold and mildew in the building.

1.04 OUTDOOR AIR VENTILATION REQUIREMENTS

A. Outdoor ventilation rates shall be calculated for each occupied space and shall conform to the requirements for ASHRAE Standard 62.1-2007, and the requirements of the Ohio Building Code, Mechanical Code.

B. Each system (other than water-source heat pumps) shall include controls for a 100 percent economizer cycle to cool the building when outside air conditions are conducive to cooling.

C. Energy recovery shall be used as a part of the design for classroom, gymnasium, locker room, and student dining/auditeria systems in order to reduce the energy consumption required to provide the necessary outdoor ventilation rates. The energy recovery systems will require both sensible and latent heat recovery necessitating the use of desiccant heat wheels or the equivalent. The design may omit the energy recovery on systems where demand ventilation control via a carbon dioxide measuring system is provided for large variable occupancy single-zone spaces such as gymnasium and dining/auditeria spaces.

D. Carbon dioxide levels shall be monitored through the direct digital temperature control system for proof of system operation to maintain a carbon dioxide level in the building of as recommended by ASHRAE Standard 62 and the Ohio Building Code. The use of space specific carbon dioxide sensors are recommended for this operation. Return air sensors may be considered provided accurate readings can be obtained. It is not the intention of this guideline to require the use of carbon dioxide sensors for a reduction of outside air quantities below the calculated minimum air flow requirements for all spaces, although is required in large variable occupancy single-zone spaces such as gymnasium and dining/auditeria spaces.

E. Ventilation calculations shall use the Ventilation Rate Method or the Indoor Air Quality Method. If the IAQ Method is used, complete calculation documentation shall be submitted at the Design Development Submittal, and specifications must include a performance test after installation. Use of the IAQ Method does not supercede any other system design requirements.

F. All mechanical ventilation systems shall utilize some means of mechanical dehumidification, unless analysis is done showing dehumidification is not needed at all outside air conditions.

1.05 AIR FLOW RATES FOR BUILDING SPACES

The following air flows denote the recommended "design" airflow rates for each space. Supply airflow rates given shall be based on the volume of the breathing zone as defined in ANSI/ASHRAE Standard 62.1-2007. When using VAV systems, it is not intended that these are the minimum airflow to the space. Exhaust air rates shall be the value shown below or as required by the Ohio Mechanical Code, whichever is higher.

	SPACE	SUPPLY AIR	EXHAUST AIR
1.	Classroom	6 air changes/hour	N/A
2.	Administrative	6 air changes/hour	N/A
3.	Gymnasium	4 air changes/hour	N/A
4.	Art Room	6 air changes/hour	1.5 cfm/SF
5.	Student Dining	6 air changes/hour	N/A
6.	Locker Room	90% of exhaust	1.5 cfm/SF
7.	Science Lab	6 air changes/hour	1.5 cfm/SF
8.	Life Skills Lab	6 air changes/hour	1.5 cfm/SF
9.	Food Service	6 air changes/hour	canopy hood
10.	Storage Room	N/A	1.0 cfm/SF*
11.	Toilet Room	N/A	75 cfm per fixture
12.	Media Center	6 air changes/hour	N/A
13.	Custodial	N/A	1.5 cfm/SF

***** *Storage Rooms shall be not required to be exhausted if there is no possible objectional transfer (odors or hazardous gas) to adjacent spaces.*

1.06 TEMPERATURE CONTROL SYSTEM

A. All temperature control systems installed shall be electronic, direct digital controls. Pneumatic controls in all or portions of the control system will not be permitted. Each facility will be provided with the means to access the control system software with a desktop or laptop computer. It will be necessary for the HVAC Design Professional to advise the school district of the options for control and management of the building available through the direct digital control system.

B. Thermostatic zoning shall be developed using good engineering practice. Dissimilar spaces shall not be grouped on the same thermostat. Each classroom shall be an independent zone. Other zones may also be required to be separately thermostatically controlled; carefully review space requirements of the manual for these requirements. Occupied/unoccupied scheduling shall be based on the associated air handling system. Each thermostat zone associated with digital control shall have a means to override the schedule for temporary occupancy.

C. The discharge air temperature for each system shall be adjustable and shall be reset as a function of the direct digital control system.

1.06 TEMPERATURE CONTROL SYSTEM (cont'd)

D. The economizer control shall be set through the central direct digital controller based on global outside air temperature and humidity.

E. The direct digital control system shall be designed to place emergency calls to designated school personnel in the event of equipment failure.

F. Options shall be investigated with each direct digital control system for the operation of exterior, corridor, and restroom lighting systems through the energy management computer.

G. The commissioning agent, temperature control contractor, HVAC contractor, and design team shall have a temperature controls presubmittal meeting to discuss the scope of work and to review the proposed graphics package.

H. Designer is to have all temperature controls indicated on the drawings, including components, sensor locations, control point diagrams, and detailed sequences of operation for each item being controlled. Deferring to the temperature control contractor to develop sequences of operation is not acceptable.

1.07 ENERGY USAGE

A. All systems shall be designed in compliance with the current ASHRAE STANDARD 90.1 - 2007 "Energy Standard for Building Except Low-Rise Residential Buildings", and the energy usage requirements prescribed by the Ohio Building Code and the Department of Energy.

1.08 OPTION SYSTEM COMPONENTS FOR EMERGENCY POWER

A. The intent of connecting emergency power to selected components of the HVAC system is to provide an opportunity to limit damage from freezing weather during a power outage of a short duration.

B. System Components Not Required for Power, but optional if within budget:

1. Exterior heat tracing circuits.
2. DDC system controllers and components related to remote alarming.
3. Air handling unit preheat coil (heating coil) run-a-round pumps.
4. Cooling tower basin heaters.
5. Chilled water circulating pump, when used for chiller freeze protection.
6. Remote fire pump house heating system.
7. Fire pump.
8. Foundation drainage sump pump.

1.09 EXTERIOR NOISE CONTROL

A. The location of exterior mechanical equipment shall be reviewed by the Design Professional for its sound impact, both inside and outside the building.

B. Exterior equipment operation shall not cause indoor sound levels to exceed generally accepted levels for the space. Refer to ASHRAE for recommended guidelines.

C. Exterior sound levels shall be in compliance with the local governmental ordinances. When these values are not governed, the following shall be used for designs. The sound level created by the equipment shall not exceed the values listed measured at the property line.

Daylight hours:	55 dBA
Nighttime hours:	50 dBA

1.10 INTERIOR BACKGROUND NOISE LEVEL (HVAC equipment only)

A. Option 1 - Using the methodology described in annexes B through D of ANSI Standard S12.60-2002, achieve a maximum background noise level in classrooms and other primary learning spaces of 45 dBA.
- OR -

B. Option 2 - Design classrooms and other core learning spaces using the methodology listed in the 2003 HVAC applications ASHRAE Handbook, Chapter 47, on Sound and Vibration Control, and achieve an RC (N) Mark level of 37.

C. Achieve a maximum background noise level in classrooms and other core learning spaces of 45 dBA by calculating core learning space noise levels for the HVAC system design using mechanical system noise calculation methods as defined in the 2003 HVAC Applications ASHRAE Handbook, Chapter 47, Sound and Vibration Control. Submit calculations for all core-learning spaces, confirming compliance with the 45 dBA limit. Commercially-available software may be used to perform the calculations for core learning space noise levels, provided calculations are based on the 2003 HVAC Applications ASHRAE Handbook, Chapter 47, Sound and Vibration Control.

1.11 CUSTOM PACKAGED PENTHOUSE SYSTEMS

A. Application – The use of Custom Package Penthouse Systems may be applied to multistory schools where more than 40% of the building is above the first floor or on schools where land use restrictions prohibit putting cooling equipment (chillers, cooling towers, etc.) on grade.

B. General Construction – It is in no way the intent of using a Custom Packaged Penthouse System to compromise the system design, maintainability, or energy efficiency of the HVAC system. The use of a Custom Packaged Penthouse should conform to the following guidelines:

1. Penthouse is a part of the building and as such the square footage counts in the prescribed formulas.

1.11 CUSTOM PACKAGED PENTHOUSE SYSTEMS (cont'd)

2. All components in the Penthouse shall be installed with the manufacturer's recommended clearances and code requirements.

3. Walkway heights, widths, means of egress and life safety systems shall comply with the building code for mechanical spaces.

4. Access to the Penthouse shall include a fully code compliant interior stairway. Elevator access should be considered in buildings 3 stories or more.

5. Exterior appearance of the Penthouse shall be an integral part of the building design.

6. Penthouse shall attach in such manner that it becomes an integral part of the building.

C. Fire Suppression shall comply with the applicable sections of this manual.

D. Plumbing shall comply with the applicable sections of this manual.

E. HVAC shall be designed in compliance with the approved systems in this previously listed Chapter and components in compliance with Chapter 9.

1. Exception: A Penthouse System may use direct expansion cooling with evaporative condensing in lieu of a chilled water system, provided the following criteria is met.

a. All equipment is part of the Penthouse construction.

b. Capacity control is provided on air system supply temperature from full load to 10% of full load with an accuracy of +/- 2 deg. F. without the use of hot gas bypass.

c. DX cooling coils shall be intertwined design.

d. Refrigeration compressors are either scroll, screw or centrifugal type.

e. Sound levels inside the Penthouse comply with all OSHA regulations.

1.12 HVAC SYSTEMS COMMISSIONING

A. Refer to Commissioning Section 9101-019100 for additional information.

1.13 ELEMENTARY MERCURY

A. No elemental mercury or mercury-containing instruments, equipment, or other items shall be permitted anywhere on school property.

1.14 LOCAL OR GENERAL EXHAUST VENTILATION

A. All indoor areas subject to the regular or frequent emission of hazardous airborne contaminants shall be equipped with local or general exhaust ventilation systems designed to effectively control emissions and minimize human exposures. Such areas include visual arts rooms, career tech labs, science rooms, and chemical storage areas. 24-hour operation of exhaust fans servicing science prep areas and custodial spaces where hazardous chemicals are used or stored shall be required. Sanitary vent stacks shall extend 2 feet above outdoor air intakes within 10 feet.

1.15 INTAKE AND RELIEF LOUVER LOCATIONS

A. Locations shall comply with current version of Ohio Building Code and ASHRAE 62.1-2007.

B. Intakes shall be located a minimum of 3’-0” above grade or flat roof to reduce snowdrift blockage.

THIS PAGE HAS BEEN INTENTIONALLY LEFT BLANK.

1.01 GENERAL

A. The descriptions of the four accepted heating, ventilating, and air conditioning systems have been included in this manual as listed below. It will be the responsibility of the HVAC Design Professional to utilize a system as described in this section, unless suitable documentation to justify a different system type has been submitted.

1.02 CENTRAL PLANT VARIABLE AIR VOLUME SYSTEM WITH HOT WATER REHEAT TERMINALS

A. Central Heating Plant

1. A minimum of 2 heating water boilers shall be provided.
   a. Gas-fired, forced draft boilers
   b. Gas-fired, atmospheric boilers
   c. Fuel oil boilers
   d. Dual-fuel (fuel oil and gas) boilers
   e. Gas-fired, high efficient, forced draft boilers

2. Total heating capacity of the boiler plant shall be approximately 130 percent of the building design load.

3. Design water supply temperatures shall be 180 degrees Fahrenheit with morning warm-up reset up 20 degrees Fahrenheit to a maximum of 190 degrees Fahrenheit. High efficiency boilers that are rated for condensing may operate at a reduced supply water temperature of 130 degrees Fahrenheit to 160 degrees Fahrenheit.

4. Design water temperature drop in the system shall be maintained between 20 degrees Fahrenheit and 40 degrees Fahrenheit.

5. Heating water distribution loop shall make use of a reverse return or direct return piping arrangement. Direct return systems shall use automatic flow controllers for water balancing.

6. The use of a primary/secondary-piping loop is not mandatory.

7. A minimum of 2 pumps shall be used for water circulation to the building system. It is recommended to use 2 pumps, each sized at 100 percent of the total system flow and pressure up to 300 gallons per minute. For total system flows above 300 gallons per minute, or 10 brake horsepower, each pump should be sized for 50 percent of the total flow and 100 percent of the required pressure. Additional pumps will be required if a primary/secondary-piping loop is included. Direct return systems shall use automatic flow controllers for water balancing.
   a. A parallel pumping configuration is required (not necessarily running at the same time).
   b. The heating water system shall be capable of a minimum 50 percent flow reduction through the use of two-way control valves, three-way control valves, and constant speed pumps, or by the use of two-way control valves and variable speed pumps.

1.02 CENTRAL PLANT VARIABLE AIR VOLUME SYSTEM WITH HOT WATER REHEAT TERMINALS (cont'd)

8. Variable speed pumping shall be utilized on systems that require 10 horsepower or greater pump horsepower. Variable speed pumping shall not be utilized where detrimental to the equipment. Each pump shall have its own variable frequency drive and is not permitted to share a variable frequency drive with another pump.

9. Air removal and/or containment methods are required on closed loop applications.
   a. Expansion tanks
   b. Air separators
   c. Air vent

10. Each system shall be provided with a manual chemical water treatment system to prevent corrosion and scaling in the heating water system.

11. A combustion air system for each boiler shall be installed to meet the code. The HVAC Design Professional must provide a means for preheating the incoming air or maintaining a minimum of 55 degrees Fahrenheit within the boiler room area. Control of the dampers shall be through the direct digital control system and will include dampers and control for the water heater system.

12. The heating water plant shall be designed to account for the affect of the heat recovery equipment.

B. Central Cooling Plant

1. Chiller system shall include one of the following chiller types:
   a. Indoor, water-cooled centrifugal
   b. Outdoor, air-cooled rotary screw
   c. Outdoor, air-cooled rotary screw with remote evaporator barrel
   d. Indoor, water-cooled rotary screw
   e. Outdoor, air-cooled scroll
   f. Indoor (compressors and evaporators), remote outdoor, air-cooled condenser

2. Outdoor chillers with evaporators exposed to freezing weather conditions must include some method of freeze protection. The following options are recommended for investigation:
   a. Glycol solutions can be used throughout the entire chilled water system to prevent freezing.
   b. Heat exchangers may be used to isolate exterior chiller systems and allow glycol use in only the exterior piping.
   c. Circulating pumps can be used to keep water flowing through the chillers when ambient temperatures are below freezing.

3. Chillers should be selected using the occupant capacity of the building instead of the sum of occupants in the spaces.

1.02 CENTRAL PLANT VARIABLE AIR VOLUME SYSTEM WITH HOT WATER REHEAT TERMINALS (cont'd)

4. Chillers should be selected at 100 percent of the building design load.

5. Design water supply temperatures shall range between 40 degrees Fahrenheit and 45 degrees Fahrenheit.

6. Design water temperature rise in the system shall be maintained between 14 degrees and 16 degrees Fahrenheit.

7. Chilled water distribution loop shall make use of a reverse return or direct return piping arrangement.

8. The use of a primary/secondary-piping loop is required when multiple chillers are used. ***Multiple chillers are to be set up in a parallel arrangement.***

9. A single pump shall be used for water circulation to the building system. A second pump will be required if a primary/secondary loop is included. Additional pumps may be required for additional chillers.
   a. System pump shall be sized at 100 percent of total flow and 100 percent of total pressure.
   b. The chilled water system shall be capable of a minimum 50 percent flow reduction through the use of two-way control valves, three-way control valves and constant speed pumps or by the use of two-way control valves and variable speed pumps.

10. Variable speed pumping shall be utilized on systems that require 10 horsepower or greater horsepower. Variable speed pumping shall not be utilized where detrimental to the equipment. Each pump shall have its own variable frequency drive and is not permitted to share a variable frequency drive with another pump.

11. Air removal and/or containment methods are required on closed loop applications.
    a. Expansion tanks
    b. Air separators
    c. Air vent

12. Each closed loop system shall be provided with a manual chemical water treatment system to prevent corrosion and scaling in the chilled water system.

13. Cooling towers are required for water-cooled chiller systems and should include one of the following cooling tower types:
    a. Induced draft (cross-flow)
    b. Forced draft (counter-flow)

14. Cooling towers shall be located at the rear of the building or on the roof. If roof mounting is selected, vibration isolation methods must be utilized.

1.02 CENTRAL PLANT VARIABLE AIR VOLUME SYSTEM WITH HOT WATER REHEAT TERMINALS (cont'd)

15. Cooling towers shall be sized to maintain condenser water temperature to the chillers during a design day with ambient wet-bulb temperatures equal to the 2 1/2 percent design wet-bulb value. This value is different than the Mean Coincident wet-bulb value.

16. ***ASHRAE 90.1 baseline system on large schools is to provide water cooled chillers. Condenser water temperatures shall be selected to obtain maximum energy efficiency. Condenser water optimization to minimize the total equipment energy (including pumping) is required for various wet bulb temperatures during the cooling season. The optimal setpoint will vary for different compressor (screw, centrifugal and scroll) types and their unloading method. The use of increased condenser water delta T from 10 degrees F to 15 degrees F shall be reviewed during design to decrease pumping energy. The goal is to optimize the chilled water system total operating power to its lowest practical value.***

17. Capacity reduction methods for cooling towers, such as multiple fans, two-speed fans, variable frequency drives, inlet dampers, condenser water mixing valves, or dump valves, shall be used to maintain condenser water temperature during partial load conditions. ***If a variable frequency drive is used on the cooling tower fan, an interlock wire between the remote disconnect and the VFD shall be installed to shut down the drive if the disconnect is turned off.***

18. A single condenser water-circulating pump shall be used for each water-cooled chiller. Pump components shall be suitable for cooling tower systems.

19. A remote tank capable of holding the water for the cooling tower system shall be provided below the cooling tower level within a tempered space. If a remote tank is not possible, heat tracing must be provided for piping exposed to freezing weather and the sump of the cooling tower.

20. The cooling tower water treatment system shall include a makeup water connection through a backflow preventer and shall be automatic in operation to prevent scaling, corrosion, and bacterial growth.

21. The chilled water plant shall be designed to account for the affect of the heat recovery equipment.

22. Thermal ice storage systems may be considered where local utility rates prove the system to be beneficial. Ice storage systems may be utilized where a simple payback of less than 5 years is realized. For simple paybacks between 5 and 10 years, a joint decision shall be made between the HVAC Design Professional and the school district as to whether ice storage should be utilized. Ice storage systems shall not be utilized if a simple payback of 10 years or less cannot be realized.

23. DX cooling shall only be utilized as described in paragraph G. Supplemental cooling systems.

1.02 CENTRAL PLANT VARIABLE AIR VOLUME SYSTEM WITH HOT WATER REHEAT TERMINALS (cont'd)

C. Air Systems

1. All air handling units are to be investigated as to whether a modular or custom unit is needed. Whether the unit is a modular type or custom type is to be clearly called out on the air handling unit schedule.

2. Variable Volume Air Handling Units

a. Air handling units should be located strategically throughout the building to distribute a constant temperature air to terminal units. Locations of air handling units can be dedicated mechanical rooms or mechanical decks. Air handling units may not be located exterior to the building.

b. Each air handling unit shall include the following components as a minimum: Supply air fan, cooling coil, heating coil, filters, and mixing box. ***In addition, it is recommended that ultraviolet lighting upstream of the unit cooling coil be considered to reduce coil cleaning frequency and to help control pathogens.***

c. Supply air temperature distributed to the terminal units shall be designed for a duct temperature of 55 degrees Fahrenheit or as required by the computer-generated building load output data. Heating coils shall be sized for a minimum of 100 degrees Fahrenheit leaving air temperature during morning warm-up. Morning warm-up shall be with 100% AHU airflow and VAV boxes 100% open.

d. Each air handling unit shall include a variable frequency drive for the fan motor to reduce the air volume available to the system.

e. Energy recovery methods such as desiccant wheels shall be included to precondition the outside air. The energy recovery method selected by the HVAC Design Professional must include latent heat recovery as well as sensible heat recovery.

f. Variable air volume systems should be investigated for classrooms, media centers, gymnasiums, student dining, auditerias, and food service, music, and administration areas.

g. All variable air volume systems shall include air flow monitoring systems to maintain the minimum outside air flow requirements as set forth in the Ohio Building Code, Mechanical Code and ASHRAE Standard 62 during occupied hours at all volumes of supply air.

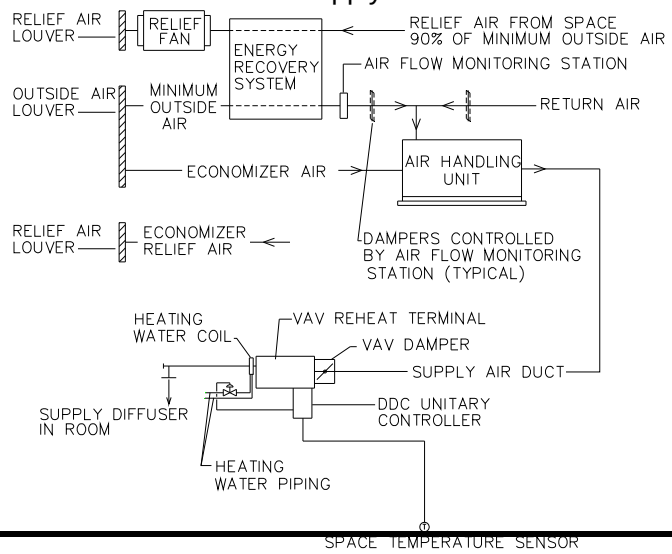

VAV Reheat Schematic

Figure B-1

1.02 CENTRAL PLANT VARIABLE AIR VOLUME SYSTEM WITH HOT WATER REHEAT TERMINALS (cont'd)

3. Single Zone Variable Volume Air Handling Units

a. Air handling units should be located as close as possible to the space being conditioned. Locations of air handling units can be dedicated mechanical rooms or mechanical decks. Air handling units may not be located exterior to the building.

b. Each air handling unit shall include the following components as a minimum: supply air fan, cooling coil, heating coil, filters, and mixing box. ***In addition, it is recommended that ultraviolet lighting upstream of the unit cooling coil be considered to reduce coil cleaning frequency and to help control pathogens.***

c. Supply air temperature distributed to the space during cooling mode shall be designed for a duct temperature of 55 degrees Fahrenheit or as required by the computer-generated building load output data. Air temperature distributed to the space during heating mode shall be as required to maintain space temperature; however, the heating coil should be sized to maintain a minimum of 100 degrees Fahrenheit leaving air temperature for morning warm-up. Morning warm-up shall be with 100% AHU airflow and VAV boxes 100% open.

d. Each air handling unit shall include a variable frequency drive for the fan motor to reduce the air volume available to the system.

e. Energy recovery methods such as desiccant wheels shall be included to precondition the outside air. The energy recovery method selected by the HVAC Design Professional must include latent heat recovery as well as sensible heat recovery. Energy recovery may be omitted on large variable occupancy single zone systems where CO_2 demand ventilation control is provided.

f. Spaces such as gymnasiums and student dining shall be designed to control humidity in the space.

g. Locker room supply air systems shall include energy recovery equipment as a means of preconditioning the air for preheating and for final cooling. The air handling units will include heating coils for additional heating, but will make use of energy recovery for cooling and dehumidification. If requested by the School District, locker rooms may be air-conditioned. The School District must be advised of the additional energy consumption of conditioning air that is being exhausted.

4. Kitchen Supply and Exhaust System

a. Makeup air shall be supplied by an air handling system or dedicated makeup air unit. Air handling unit shall be located as close to the kitchen as possible. Location of the unit shall be in a dedicated mechanical room or mechanical deck, with exception that a dedicated gas-fired makeup air unit is permitted to be installed on the roof of the kitchen, for compensation of the kitchen hood exhaust system.

b. Air handling systems serving the kitchen area shall serve areas directly related to kitchen and dining functions, and shall not serve other spaces such as classrooms or administrative areas. Serving an office which is part of the kitchen operation is acceptable.

c. Refer to paragraph ***8430.1.02.F.4 e and f*** for kitchen hood and dishwasher exhaust systems. System design shall comply with the Ohio Mechanical Code.

1.02 CENTRAL PLANT VARIABLE AIR VOLUME SYSTEM WITH HOT WATER REHEAT TERMINALS (cont'd)

D. Ductwork Distribution Systems

1. Medium/High Pressure Supply Air Ductwork
   a. Air shall be distributed from the variable volume air handling units to terminal units located above the ceiling through a medium/high pressure ductwork system. Air velocities should be a maximum of 3,000 feet per minute. The system must be analyzed for acoustical attenuation in the form of dual-walled ductwork or manufactured sound attenuators. It is recommended the medium/high pressure ductwork system be routed through corridors to reduce potential sound problems.
   b. The HVAC Design Professional is required to evaluate the entire medium/high pressure ductwork system using an approved software program designated for this purpose. Examples of such programs include: United McGill's UNI-DUCT program, Trane's Varitrane program, or Tempmaster's AcuDuct program.

2. Variable Air Volume Reheat Terminal Units
   a. Terminal units shall be located above the ceiling and shall control the flow of air to the space based on a space temperature sensor. Terminal units should be located within 2 feet of an accessible ceiling (where ceilings exist) to allow for maintenance.
   b. On a rise in space temperature, the damper in the terminal unit will open and allow air from the medium/high pressure duct system into the space. As the space temperature falls, the damper will close to a minimum position as determined by the HVAC Design Professional. The minimum position shall be set to maintain the required ventilation rate in the space. On a continued fall in space temperature, the heating coil control valve at the terminal unit shall be opened to maintain space set point.

3. Low Pressure Supply Air Ductwork
   a. Air is distributed from the variable volume terminal units to air devices located throughout the space via a low pressure ductwork system. The maximum air velocity in this part of the ductwork system should be 1,200 feet per minute. Air is also distributed from single zone air handling units to air devices via a low pressure ductwork system.
   b. Supply air ductwork connections to ceiling-mounted air devices should be completed with flexible ductwork.
   c. Air devices should be ceiling-mounted, wherever possible, to prevent damage by students. If spaces do not include ceilings, the air devices should be wall- or duct-mounted out of the reach of students.
   d. Low temperature air systems (below 50 degrees Fahrenheit) require the use of special diffusers and air devices to prevent moisture accumulation.
   e. Each low pressure duct leading to an air device should include a manual volume damper to balance the system.

1.02 CENTRAL PLANT VARIABLE AIR VOLUME SYSTEM WITH HOT WATER REHEAT TERMINALS (cont'd)

4. Return/Relief Air System for Variable Volume Air Handling Units
   a. The return air plenum on a variable volume system is the space between the ceiling and structure of the building. All materials inside the plenum area should be rated for this type of application to reduce smoke and fire potential.
   b. Return air is routed into the plenum through return grilles in the ceiling. Return air is pulled from the plenum by the supply air fan located in the air handling unit.
   c. Relief air shall be totally mechanically exhausted or by use of a combination of constant speed exhaust and a gravity relief system. Combination relief air exits the building through two paths. During normal operation, relief air is pulled back to the mechanical room by the relief air fan and exits the building through an energy recovery system. Roof-mounted gravity relief ventilators or exterior, wall-mounted louvers with backdraft dampers should be used as exit points for the relief air. During the economizer cycle, relief air exits the building through supplementary rooftop ventilators and wall louvers located around the building.
   d. The relief air fan of a combination relief system should be constant volume and sized to maintain a slight positive pressure in the space at minimum outside air conditions.

5. Return/Relief Air Systems for Single Zone Constant Volume/Variable Temperature Air Handling Units
   a. Return air is ducted back to the air handling unit versus using the return air plenum. It is ***recommended*** that return air devices be located near the floor for large rooms with high ceilings (gymnasiums, cafeterias, etc.)
   b. Relief air shall be totally mechanically exhausted or by use of a combination of constant speed exhaust and a gravity relief system. Combination relief air exits the building through two paths. During normal operation, relief air is pulled back to the mechanical room by the relief air fan and exits the building through an energy recovery system. Roof-mounted gravity relief ventilators or exterior, wall-mounted louvers with backdraft dampers should be used as exit points for the relief air. During the economizer cycle, relief air exits the building through supplementary rooftop ventilators and wall louvers located around the building.
   c. The relief air fan of a combination relief system shall be constant volume and sized to maintain a slight positive pressure in the space at minimum outside air conditions.

1.02 CENTRAL PLANT VARIABLE AIR VOLUME SYSTEM WITH HOT WATER REHEAT TERMINALS (cont'd)

E. Ventilation Air Systems

1. There are two paths for outside air entering the air handling units.
   a. The minimum outside air required for ventilation enters the building through exterior wall louvers or roof-mounted ventilators near the air handling unit and immediately passes through a heat recovery system. The tempered air then enters the return air ductwork just before the air handling unit mixing box.
   b. During the economizer cycle, 100 percent of the air passing through the air handling unit enters the mixing box through a direct duct connection to exterior louvers or roof-mounted ventilators. Economizer air does not pass through the heat recovery system.

F. Exhaust Air Systems

1. General exhaust systems shall be located throughout the building to exhaust restrooms, electrical rooms, mechanical rooms, custodial closets, and storage rooms.

2. Roof-mounted fans shall be utilized wherever "low profile" roofs are located.

3. In-line or deck-mounted utility fans should be used to avoid penetration of sloped roof structures. In-line fans should not be located over sound sensitive areas such as classrooms, media centers, conference rooms, etc. Fans shall be installed within 2 feet of an accessible ceiling (where ceilings exist) to allow for maintenance.

4. Special Exhaust Systems
   a. Science and art rooms require general exhaust systems in addition to a supply/return air system to remove odors associated with experiments, paint, and chemicals. These exhaust systems shall be manually controlled using spring-wound timer switches within the space and not through the temperature control system. Exhaust requirements in these applications shall be such to create a slight negative pressure in the room and contain the odors to one classroom or lab. Makeup air for exhaust will be drawn from the building return air plenum.
   b. Fume hood exhaust systems shall be installed at all fume hood locations. Each fume hood shall be exhausted with its own exhaust fan. Exhaust fans for fume hoods shall be roof-mounted, wherever possible, or as close to the perimeter of the building as possible, if installed as an in-line or utility fan. ***Ductwork shall be stainless steel or epoxy coated steel rated for the products in the exhaust air. The location of the fume hood exhaust and intake air shall be closely reviewed during design.***
   c. Kiln systems shall include a dedicated exhaust system to remove heat. Control of the exhaust fan shall be based on a rise in space temperature.

1.02 CENTRAL PLANT VARIABLE AIR VOLUME SYSTEM WITH HOT WATER REHEAT TERMINALS (cont'd)

d. Technology education systems require dedicated dust collection systems with exterior cyclone units and interior after-filter units. Dust collection system shall include floor sweeps and individual connection to dust generating equipment such as table saws, planers, jointers, etc. Special welding exhaust systems may be required if welding stations are provided. Welding exhaust should be completely separate from any dust collection exhaust system and should be connected directly to exterior wall louvers or rooftop ventilators.

e. Kitchen canopy systems shall be provided over kitchen cooking equipment where required by applicable codes. Kitchen canopies shall include exhaust and makeup air as required by code. ***Variable speed and time controls for exhaust hoods are recommended. They are to utilize a system with temperature and optical sensors to determine ventilation requirements based on exhaust temperature and smoke content.***

f. Dishwasher exhaust shall be designed by the HVAC Design Professional to meet the requirements set forth by the Food Service Design Professional and will result in either a direct-connected system or an overhead exhaust hood arrangement.

5. Locker Room Exhaust Systems

a. Locker room spaces shall be exhausted independently from the building general exhaust systems. The quantity of exhaust shall be designed by the HVAC Design Professional to meet the minimum code requirements, but shall not be less than 1.5 cubic feet per minute per square foot in quantity.

b. The exhaust shall be grouped from specific spaces, such as male locker rooms or female locker rooms, and shall be routed through an energy recovery system in order to obtain usable energy from the exhausted air for use in preconditioning the supply air in the same locker room spaces.

G. Supplemental Heat Systems

1. Cabinet unit heaters shall be ceiling recessed versus wall mounted. The only acceptable use of a wall-mounted unit would be in an open roof structure design as developed by the HVAC Design Professional.

2. Propeller unit heaters shall be used for supplementary heat in mechanical rooms, shop areas, receiving, etc.

3. Fintube/radiant ceiling panel heating shall be used to provide heat for large, exterior exposures. Radiant ceiling panels shall not be used where ceiling heights exceed 12 feet. The HVAC Design Professional should avoid the use of fintube in all applications where damage or vandalism is widespread.

4. Miscellaneous heat sources throughout the building may be required and should be evaluated on a case-by-case basis by the HVAC Design Professional.

1.02 CENTRAL PLANT VARIABLE AIR VOLUME SYSTEM WITH HOT WATER REHEAT TERMINALS (cont'd)

H. Electronic Temperature Control System

1. The building shall be split into different zones according to air systems, exterior exposure, and general occupied schedules. Example: Administration areas shall be a separate zone; classrooms with southern exposure shall be a separate zone from classrooms with northern exposure, etc.

2. Each occupied space in the building shall include space temperature control.

3. Zones shall be placed into occupied/unoccupied mode through the temperature control computer.

4. Variable volume air handling units shall provide air to match a discharge air temperature set point from the temperature control computer. Small, direct-expansion cooling systems shall be controlled from a return air set point in lieu of discharge air set point.

5. Single zone air handling units shall be controlled from a space-mounted temperature sensor. Space-mounted or return air humidity sensors shall be included in the event reheat is included for humidity control of gymnasiums and student dining. A return duct CO_2 sensor shall be provided for large single zone variable occupancy systems utilizing demand ventilation control.

6. Through the temperature control system, it shall be possible to reset the space temperature sensors to a night setback temperature of 55 degrees Fahrenheit for heating to reduce energy consumption.

7. During unoccupied hours, air handling units shall cycle only as required to maintain night setback temperatures.

8. Dry-Bulb controlled economizer for the building shall be controlled globally from the main temperature control computer. As the dry-bulb temperature of the return air rises above the dry-bulb temperature of the outside air, the entire building shall be placed into economizer mode. Return air temperature sensors shall be included for each air handling unit. Provide an outside air enthalpy high limit to end the economizer cycle if the outside air enthalpy exceeds the limit set point. Differential enthalpy economizer shall also be acceptable.

9. Graphic screens shall be included for each air handling unit, boiler plant, cooling plant, variable air volume terminal unit, and floor plan.

10. The heating water pumping system shall be enabled when ambient temperatures drop below 50 degrees Fahrenheit during unoccupied hours and 55 to 70 degrees Fahrenheit during occupied hours. Design Professional is to determine the occupied setpoint based on thermal balance. Boilers shall maintain water temperature while the pumping system is enabled. ***It is recommended with multiple boiler arrangements that a flow measuring device is used in conjunction with supply and return temperature sensors to calculate system Btu/h required and to then stage the boilers accordingly.***

1.02 CENTRAL PLANT VARIABLE AIR VOLUME SYSTEM WITH HOT WATER REHEAT TERMINALS (cont'd)

11. The chilled water pumping system shall be enabled when ambient temperatures rise above 60 degrees Fahrenheit during occupied hours and when the building relative humidity rises above 65 percent during unoccupied hours. Chillers shall maintain water temperature while the pumping system is enabled. Systems will shutdown when the relative humidity falls below 60%.

12. The temperature control system shall prevent the return water temperature from dropping below the required temperature allowable at the boilers.

13. All air handling units shall be controlled to cycle during unoccupied hours in order to prevent space relative humidity in excess of 65 percent. Systems will shutdown when the relative humidity falls below 60%.

1.03 CENTRAL PLANT VARIABLE AIR VOLUME SYSTEM WITH FAN-POWERED REHEAT TERMINALS

A. Central Heating Plant
   1. Reference"Central Plant Variable Air Volume System with Hot Water Reheat Terminals"

B. Central Cooling Plant
   1. Reference "Central Plant Variable Air Volume System with Hot Water Reheat Terminals"

C. Air Systems
   1. Variable Volume Air Handling Units
      a. Reference "Central Plant Variable Air Volume System with Hot Water Reheat Terminals"

   2. Single Zone Variable Volume Air Handling Units
      a. Reference "Central Plant Variable Air Volume System with Hot Water Reheat Terminals"

D. Ductwork Distribution Systems
   1. Medium/High Pressure Supply Air Ductwork
      a. Reference "Central Plant Variable Air Volume System with Hot Water Reheat Terminals"

   2. Variable Air Volume Fan-Powered Reheat Terminal Units.
      a. Terminal units shall be located above the ceiling and shall control the flow of air to the space based on a space temperature sensor. Terminal units should be located within 2 feet of an accessible ceiling (where ceilings exist) to allow for maintenance.
      b. Each terminal unit shall include a fan and a supply air valve oriented in series. The fans shall operate continuously while the space is in occupied mode.

1.03 CENTRAL PLANT VARIABLE AIR VOLUME SYSTEM WITH FAN-POWERED REHEAT TERMINALS (cont'd)

c. On a rise in space temperature, the damper in the terminal unit will open and allow air from the medium/high pressure duct system into the terminal fan. As the space temperature falls, the damper will close to a minimum position as determined by the HVAC Design Professional. The minimum position shall be set to maintain the required ventilation rate in the space. By reducing the amount of air available from the air handling unit, the terminal fan induces more air from the plenum space. The heat generated by lights is used to reheat the supply air. On a continued fall in space temperature, the heating coil control valve at the terminal unit shall be opened to maintain space set point.

Series Fan Powered VAV Schematic
Figure C-1

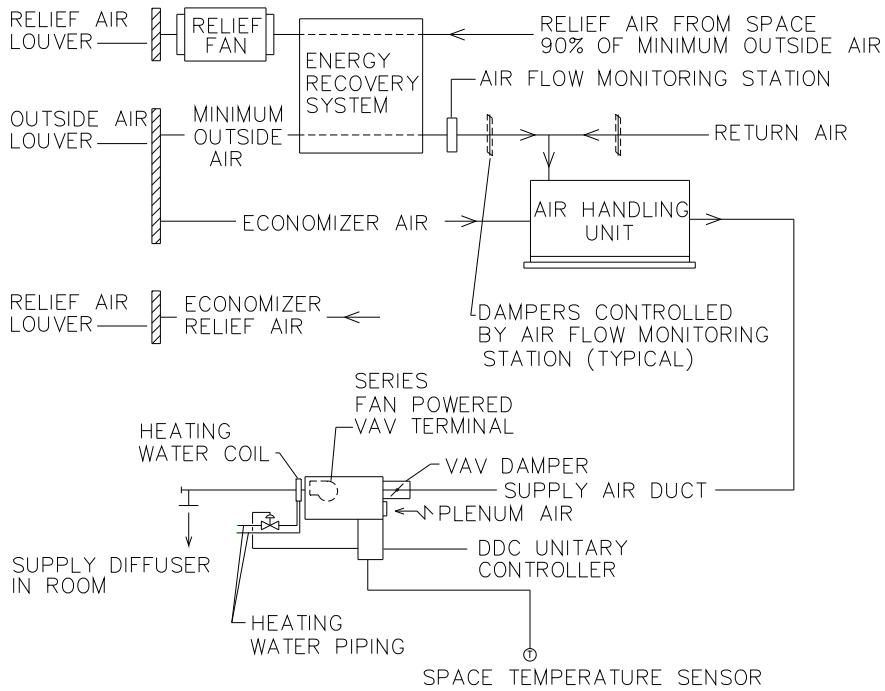

3. Low Pressure Supply Air Ductwork
   a. Reference "Central Plant Variable Air Volume System with Hot Water Reheat Terminals"

4. Return/Relief Air System for Variable Volume Air Handling Units
   a. Reference "Central Plant Variable Air Volume System with Hot Water Reheat Terminals"

5. Return/Relief Air Systems for Single Zone Constant Volume/Variable Temperature Air Handling Units
   a. Reference "Central Plant Variable Air Volume System with Hot Water Reheat Terminals"

1.03 CENTRAL PLANT VARIABLE AIR VOLUME SYSTEM WITH FAN-POWERED REHEAT TERMINALS (cont'd)

E. Ventilation Air Systems

1. Reference "Central Plant Variable Air Volume System with Hot Water Reheat Terminals"

F. Exhaust Air Systems

1. Reference "Central Plant Variable Air Volume System with Hot Water Reheat Terminals"

G. Supplemental Heat Systems

1. Reference "Central Plant Variable Air Volume System with Hot Water Reheat Terminals"

H. Electronic Temperature Control System

1. The building shall be split into different zones according to air systems, exterior exposure, and general occupied schedules. Example: Administration areas shall be a separate zone; classrooms with southern exposure shall be a separate zone from classrooms with northern exposure, etc.

2. Each occupied space in the building shall include space temperature control.

3. Zones shall be placed into occupied/unoccupied mode through the temperature control computer.

4. Variable volume air handling units shall provide air to match a discharge air temperature set point from the temperature control computer. Small, direct-expansion cooling systems shall be controlled from a return air set point in lieu of discharge air set point.

5. Single zone air handling units shall be controlled from a space-mounted temperature sensor. Space-mounted or return air humidity sensors shall be included in the event reheat is included for humidity control of gymnasiums and student dining. A return duct CO_2 sensor shall be provided for large single zone variable occupancy systems utilizing demand ventilation control.

6. Through the temperature control system, it shall be possible to reset the space temperature sensors to a night setback temperature of 55 degrees Fahrenheit for heating to reduce energy consumption.

7. During unoccupied hours, the variable volume terminal fans shall cycle as required to maintain night setback temperatures.

1.03 CENTRAL PLANT VARIABLE AIR VOLUME SYSTEM WITH FAN-POWERED REHEAT TERMINALS (cont'd)

8. Dry-Bulb controlled economizer for the building shall be controlled globally from the main temperature control computer. As the dry-bulb temperature of the building return air rises above the dry-bulb temperature of the outside air, the entire building shall be placed into economizer mode. Return air temperature sensors shall be included for each air handling unit. Provide an outside air enthalpy high limit to end the economizer cycle if the outside air enthalpy exceeds the limit set point.

9. Graphic screens shall be included for each air handling unit, boiler plant, cooling plant, VAV terminal unit, ***and floor plan.***

10. Reference "Central Plant Variable Air Volume System with Hot Water Reheat Terminals" for additional temperature control requirements.

1.04 WATER-SOURCE HEAT PUMP SYSTEM

A. Central Heat Rejection System

1. Cooling Tower or Fluid Cooler
   a. Induced draft (cross-flow)
   b. Forced draft (counter-flow)

2. Cooling towers shall be located at the rear of the building or on the roof. If roof mounting is selected, vibration isolation methods must be utilized. Coordinate final location of cooling tower with any outside air intake louvers. Tower shall be no closer than 30 feet from the nearest intake louver.

3. Cooling towers shall be sized to maintain heat pump condenser water temperatures during a design day with ambient wet-bulb temperatures equal to the 2 1/2 percent design wet-bulb value. This value is different than the Mean Coincident wet-bulb value.

4. Cooling tower water temperatures shall be selected with the heat pump condenser water temperature to obtain maximum efficiency.

5. Capacity reduction methods for cooling towers, such as multiple fans, 2-speed fans, variable frequency drives, inlet dampers, mixing valves, or dump valves, shall be used to maintain tower water temperature during partial load conditions. ***If a variable frequency drive is used on the cooling tower fan, an interlock wire between the remote disconnect and the VFD shall be installed to shut down the drive if the disconnect is turned off.***

6. A remote tank capable of holding the water for the cooling tower system shall be provided below the cooling tower level within a tempered space. If a remote tank is not possible, heat tracing must be provided for all piping exposed to freezing weather and the sump of the cooling tower.

1.04 WATER-SOURCE HEAT PUMP SYSTEM (cont'd)

7. The cooling tower water circulation pumps shall be sized to maintain the design water flow through the cooling tower system. All pump components shall be suitable for cooling tower systems.

8. The cooling tower water treatment system shall include a makeup water connection through a back-flow preventer and shall be automatic to prevent scaling, corrosion, and bacterial growth.

9. The cooling tower water system shall be separated from the heat pump condenser water system by a plate and frame heat exchanger.

10. Geo-thermal systems may be utilized in lieu of a cooling tower or fluid cooler. A life cycle cost analysis shall be submitted for approval by the Ohio School Facilities Commission. The life cycle cost analysis shall include any extra site acquisition costs and a site variance request (if applicable). ***Life cycle cost shall be compared with AHSRAE 90.1 - 2007 appendix G for the various systems.***

B. Heating Water Plant

1. A minimum of 2 heating water boilers shall be provided.
   a. Gas-fired, forced draft boiler
   b. Gas-fired, atmospheric boiler
   c. Fuel oil boiler
   d. Dual-fuel (fuel oil and gas) boiler
   e. Electric boiler
   f. Gas-fired, high efficient, forced draft boiler

2. Total heating capacity of the boiler plant shall be approximately 130 percent of the building design load minus the total heat pump heat of compression plus the heat loss of the exterior closed loop fluid cooler (where applicable). Note: Supplemental heating <u>may</u> not be required in a ground source heat pump system. If this heating is not to be used in a project, the Design Engineer shall submit calculations supporting this (for approval).

3. A combustion air system for each boiler shall be installed to meet the intent of the code. The HVAC Design Professional must provide a means for preheating the incoming air or maintaining a minimum of 55 degrees Fahrenheit within the boiler room area. Control of the dampers shall be through the direct digital control system and will include dampers and control for the water heater system.

C. Heat Pump Condenser Water Circulation System

1. Temperature of the heat pump condenser water loop shall range between 60 degrees Fahrenheit and 90 degrees Fahrenheit. An exception to this noted range would be loop temperatures as low as 35 degrees Fahrenheit for ground-source water systems. Below 40 degrees Fahrenheit design water temperature, a glycol solution shall be specified to protect the equipment. ***Design professional must verify that equipment is designed to and rated for the condenser water loop temperature.***

1.04 WATER-SOURCE HEAT PUMP SYSTEM (cont'd)

2. Heat shall be introduced to the heat pump condenser water loop using a three-way temperature control valve connection to the supplementary heating loop.

3. The heat pump condenser water distribution system shall make use of a reverse return or direct return piping arrangement. Direct return systems shall use automatic flow controllers for water balancing.

4. A minimum of 2 pumps shall be used for water circulation to the building heat pump condensers. It is recommended to use 2 pumps, each sized at 100 percent of the total system flow and pressure up to 300 gallons per minute. For total system flows above 300 gallons per minute or 10 brake horsepower, each pump should be sized for 50 percent of the total flow and 100 percent of the required pressure.
   a. A parallel pumping configuration is required.
   b. The heat pump condenser water circulation system shall be capable of a minimum 50 percent flow reduction through the use of two-way control valves, three-way control valves, and constant speed pumps, or by the use of two-way control valves and variable speed pumps.

5. Variable frequency drives should be investigated for energy-saving potential on any heat pump condenser water distribution system with the use of modulating control valves at each heat pump. The HVAC Design Professional shall evaluate "fouling" of the condenser coils due to low flows in the heat pumps as part of the variable speed investigation.

6. Air removal and/or containment methods are required on closed loop applications.
   a. Expansion tanks
   b. Air separators
   c. Air vent

7. Each closed loop system shall be provided with a manual chemical water treatment system to prevent corrosion and scaling in the heat pump condenser water system. A side-flow filtration system will be required for the heat pump tower water loop system and should be located in the boiler room for de-coupled, open tower applications.

D. Supplementary Heating Water Circulation System
   1. Supplementary heating water loop shall be designed to provide heat to all supplementary heating units as well as provide backup heat to the heat pump condenser water circulation system.

   2. ***Design water supply temperatures shall 180 degrees Fahrenheit with morning warm-up reset up 20 degrees Fahrenheit to a maximum of 190 degrees Fahrenheit. High efficiency boilers that are rated for condensing may operate at a reduced supply water temperature of 130 degrees Fahrenheit to 160 degrees Fahrenheit.***

1.04 WATER-SOURCE HEAT PUMP SYSTEM (cont'd)

3. The supplementary heat distribution system is separate from the heat pump condenser water system and should make use of a direct return piping arrangement.

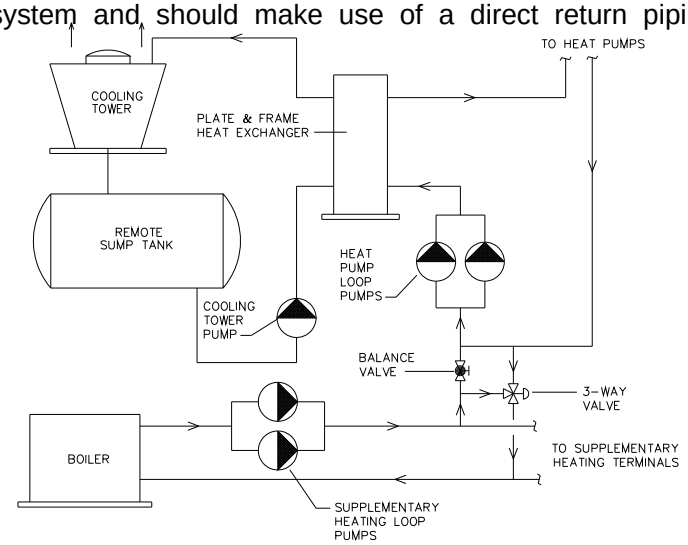

Water Source Heat Pump Schematic

(open tower)
Figure E-1

4. A minimum of 2 pumps shall be used for the supplementary water circulation system. It is recommended to use 2 pumps, each sized at 100 percent of the total system flow and pressure up to 300 gallons per minute. For total system flows above 300 gallons per minute or 10 brake horsepower, each pump should be sized for 50 percent of the total flow and 100 percent of the required pressure.
   a. A parallel pumping configuration is required.

5. A separate air removal and/or containment method is required on the supplementary heating water circulation system.
   a. Expansion tanks
   b. Air separators
   c. Air vent

6. Chemical treatment of the supplementary heating water system is not required due to mixing available through the three-way valve connection to the heat pump condenser water distribution system.

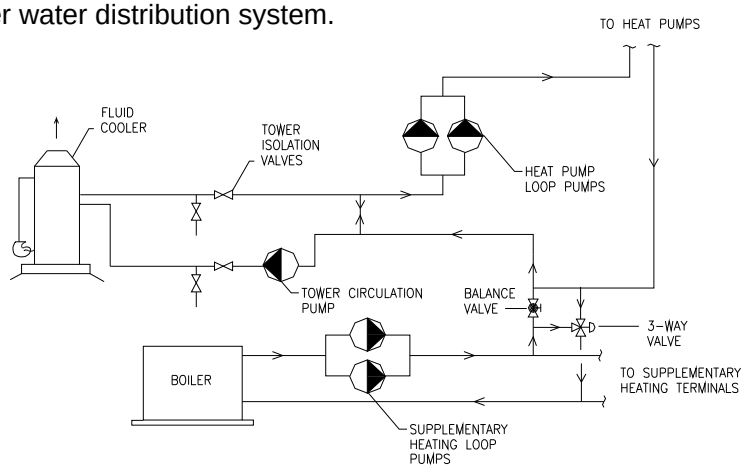

Water Source Heat Pump Schematic

(closed circuit fluid cooler)
Figure E-2

1.04 WATER-SOURCE HEAT PUMP SYSTEM (cont'd)

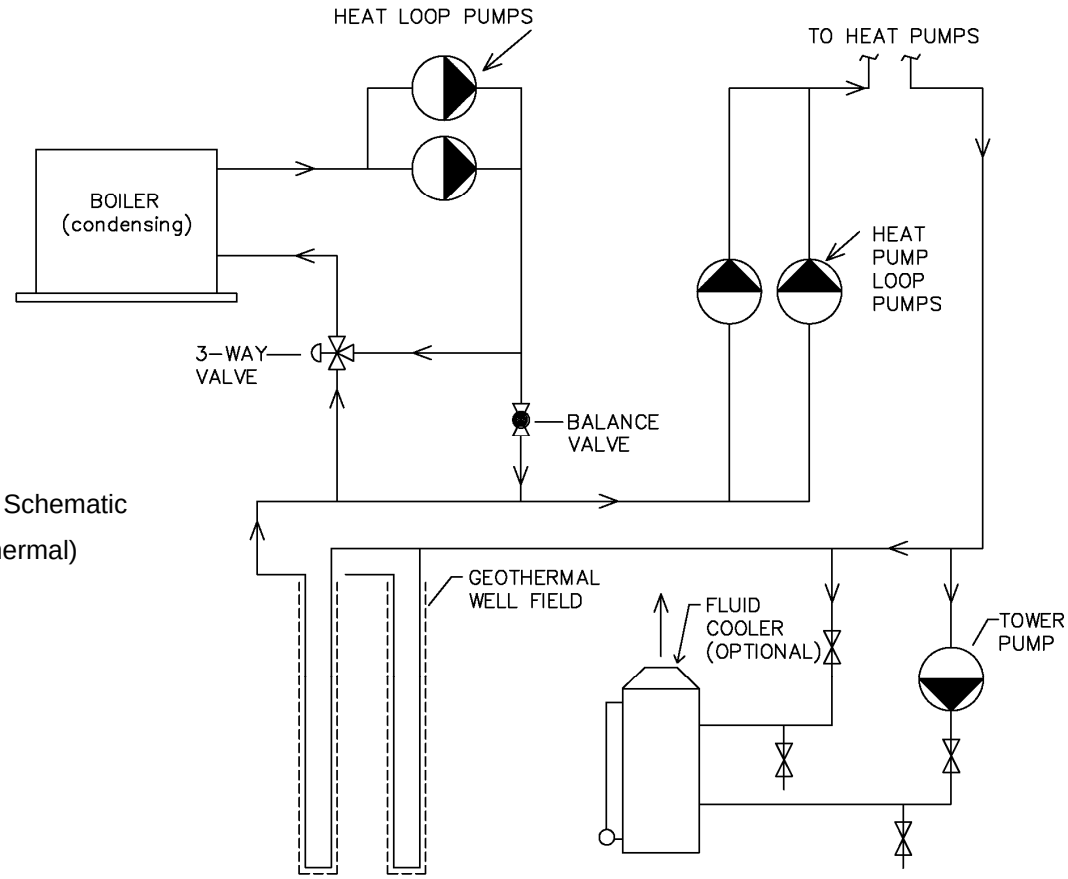

Geothermal Heat Pump Schematic

(closed circuit geothermal)
Figure E-3

E. Ventilation Air System

1. Constant Volume 100 Percent Outside Air Handling Units
   a. Locations of air handling units can be dedicated mechanical rooms or mechanical decks. Air handling units may not be located exterior to the building.
   b. Each air handling unit shall include the following components as a minimum: supply air fan, cooling coil, ***heat recovery wheel,*** heating coil, and filters.
   c. Ventilation air temperature distributed to the ***space being served shall have discharge air temperature reset schedule determined by the Design Professional for occupant comfort and energy savings. The unit shall be capable of dehumidification and reheat to maintain less than 65 grains of moisture per lb of dry air.*** The reheat shall be provided by an energy recovery method such as Hot Gas Reheat, Sensible Energy Recovery Wheel, or Heat Pipe System. ***Humidification in the winter is not required.***
   d. Energy recovery methods such as desiccant wheels shall be included to precondition the outside air. The energy recovery method selected by the HVAC Design Professional must include latent heat recovery as well as sensible heat recovery.

1.04 WATER-SOURCE HEAT PUMP SYSTEM (cont'd)

e. An outdoor, air-cooled condensing unit piped to a refrigeration coil in each air handling unit will be provided with the equipment or located as near the mechanical unit as possible and shall be controlled through the direct digital control system. Or as part of a packaged, indoor ventilation make-up air unit, the condenser may be water cooled and the unit may have an integral hot gas reheat coil.

f. The ventilation unit is to dehumidify the ventilation air to the level indicated in item c., above. Ventilation air dehumidification is not to be handled at the terminal heat pump level.

g. It is recommended that ventilation air be provided to terminal heat pumps via the heat pump return air stream and not directly to the space, unless the ventilation load or system operation dictate this need.

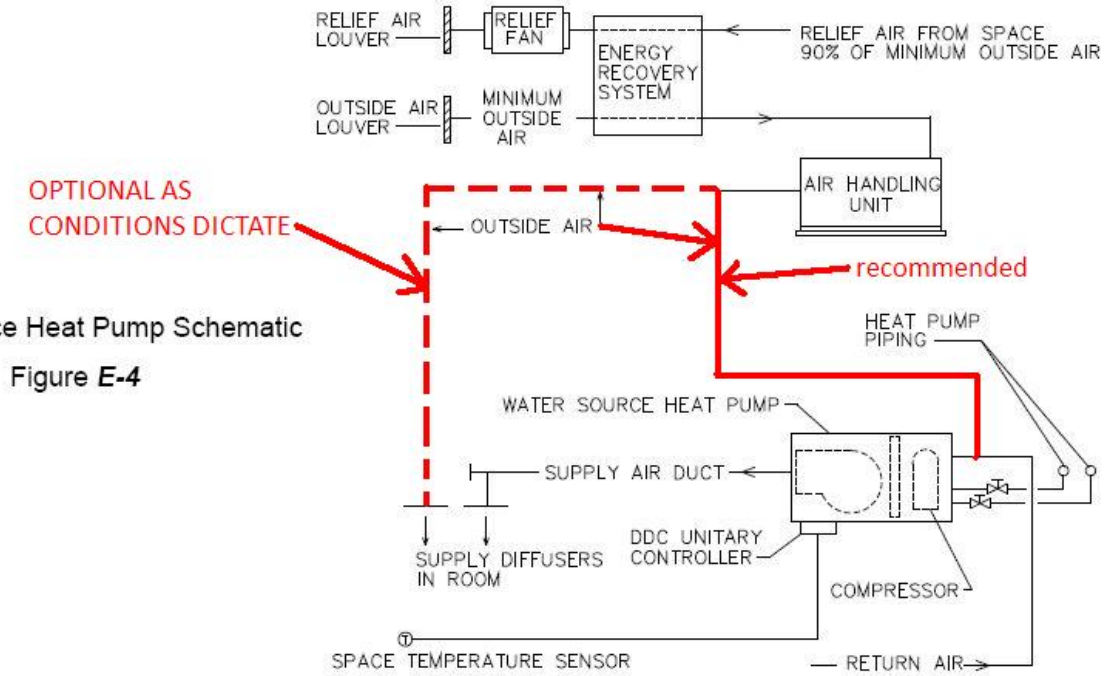

Water Source Heat Pump Schematic

Figure ***E-4***

2. Dual Technology 100 Percent Outside Air Handling Units

a. Unit shall be configured similar to that described in a. above. However, shall incorporate both a total enthalpy energy wheel and a desiccant dehumidification wheel. The capacity of the Desiccant wheel shall be controlled by either space or return air humidistat modulating face and by-pass dampers at the desiccant wheel.

b. Desiccant regeneration air shall be pulled from the exhaust air stream and shall be heated by gas or electric source.

1.04 WATER-SOURCE HEAT PUMP SYSTEM (cont'd)

F. Ductwork Distribution Systems

1. Ventilation Air Ductwork
   a. Ventilation air is distributed from the air handling units to the classroom via a low pressure ductwork system. The maximum air velocity in this part of the ductwork system should be 1,200 feet per minute.
   b. Ventilation air ductwork ***should be connected to the return air path of the terminal heat pump. Do not introduce ventilation air directly to plenum space above the ceiling. In some cases, ventilation must be connected directly to the space being served (i.e. ventilation airflow required higer than terminal airflow required).*** The control sequence for building operation shall require the startup of all heat pump fans prior to the startup of the main ventilation fans for prevention of reverse fan operation of the heat pump units.

2. Classroom Water-Source Heat Pumps
   a. Heat pumps shall be located above accessible corridor ceilings, arranged together on a mechanical deck or other appropriate locations to minimize noise. Units will not be permitted over the classroom ceilings due to difficulty in servicing and associated noise. Refer to LEED for Schools noise requirements.
   b. Heat pumps shall be sized as required to maintain temperature throughout the space. Condenser water temperature will affect the selections of other equipment and should be coordinated by the HVAC Design Professional.
   c. Heat pump supply fans shall run continuously during occupied hours.
   d. Condensate piping shall be routed from each heat pump to an acceptable discharge location such as a custodial sink, floor drain, or exterior to the building. Condensate piping located within the plenum shall be suitable for plenum use.

3. Activity Spaces
   a. Spaces such as gymnasiums, student dining, and media centers shall be conditioned using heat pump units. These units will require placement on an adjacent mechanical deck.
   b. Heat pumps shall be sized as required to maintain temperature throughout the space.
   c. Heat pump supply fans shall run continuously during occupied hours.
   d. Condensate piping shall be routed from each heat pump to an open site floor drain located on the mechanical deck.

4. Low Pressure Duct Distribution System
   a. Air is distributed from the heat pump units to air devices located throughout the space via a low pressure ductwork system. The maximum air velocity in this part of the ductwork system should be 1,200 feet per minute.
   b. Supply air ductwork connections to ceiling-mounted air devices should be completed with flexible ductwork.

1.04 WATER-SOURCE HEAT PUMP SYSTEM (cont'd)

c. Air devices should be ceiling mounted, wherever possible, to prevent damage by students. If spaces do not include ceilings, the air devices should be wall- or duct-mounted out of the reach of students.

d. Each low pressure duct leading to an air device should include a manual volume damper to balance the system.

5. Return/Relief Air System

a. The return air plenum for a water source heat pump system is the space between the ceiling and structure of the building. All materials inside the plenum area should be rated for this type of application to reduce smoke and fire potential.

b. Return air is routed into the plenum through return grilles in the ceiling. Return air is induced from the plenum by the supply fan of the individual heat pumps.

c. Relief air is pulled back to the mechanical room by the relief air fan and exits the building through an energy recovery system. Roof-mounted gravity relief ventilators, or exterior, wall-mounted louvers with backdraft dampers should be used as exit points for the relief air.

d. The relief air fan should be constant volume and sized to maintain a slight positive pressure in the space.

G. Exhaust Systems

1. Reference "Central Plant Variable Air Volume System with Hot Water Reheat Terminals"

H. Supplemental Heat Systems

1. Reference "Central Plant Variable Air Volume System with Hot Water Reheat Terminals"

I. Electronic Temperature Control System

1. The building shall be split into different zones according to exterior exposure and general occupied schedules. For example: Administration areas shall be a separate zone; classrooms with southern exposure shall be a separate zone from classrooms with northern exposure, etc.

2. Each occupied space in the building shall include space temperature control.

3. Zones shall be placed into occupied/unoccupied mode by the temperature control computer.

4. Through the temperature control system, it shall be possible to reset the space temperature sensors to a night setback temperature of 55 degrees Fahrenheit to reduce energy consumption for heating applications.

5. During unoccupied hours, all heat pump units shall cycle as required to maintain night setback temperatures.

1.04 WATER-SOURCE HEAT PUMP SYSTEM (cont'd)

6. Graphic screens shall be included for each ventilation air handling unit, boiler plant, cooling tower, circulation pumps, heat exchanger, heat pump terminal unit, and floor plan.

7. The supplementary heating water pumping system shall be enabled when ambient temperatures are below system set points; for example, 40 degrees Fahrenheit during unoccupied hours and 55 to 70 degrees Fahrenheit during occupied hours. Engineer is to determine the occupied setpoint based on thermal balance. Boilers shall maintain water temperature while the pumping system is enabled.

8. The heat pump water circulation system shall be enabled continuously during occupied hours and when any heat pump is operational during unoccupied hours.

9. All heat pumps shall be controlled to cycle during unoccupied hours in order to prevent space relative humidity in excess of 65 percent.

J. Kitchen Supply and Exhaust System:

1. Make-up air shall be supplied by an air handling system or dedicated makeup air unit. Air handling unit shall be located as close to the kitchen as possible. Location of the unit shall be in a dedicated mechanical room or mechanical deck with exception that a dedicated gas-fired makeup air unit is permitted to be installed on the roof of the kitchen, for compensation of the kitchen hood exhaust system.

2. Air handling systems serving the kitchen area shall serve areas directly related to kitchen and dining functions, and shall not serve other spaces such as classrooms or administrative areas. Serving an office which is part of the kitchen operation is acceptable.

3. Refer to Paragraph ***8430.1.02.f.4 e and f*** for kitchen hood and dishwasher exhaust systems. System design shall comply with the Ohio Mechanical Code.

K. Closed-Loop Geothermal Well Piping System:

1. System must be validated by a life cycle cost energy model and project budget before proceeding with this type of system.

2. Design shall be in conformance with current Closed-Loop/Geothermal Heat Pump Standard from IGSHPA (International Ground Source Heat Pump Association).

3. Project shall have a minimum of two (2) test wells completed to evaluate geological conditions, thermal conductivity and thermal diffusivity in the well field during design. Testing shall comply with IGSHPA standard 1B "Design Method and Compliance" current edition with a written report.

1.04 WATER-SOURCE HEAT PUMP SYSTEM (cont'd)

4. All HDPE piping materials and heat-fused materials shall be manufactured from a virgin polyethylene extrusion compound material in accordance with ASTM-2513, Sections 4.1 and 4.2. Pipe shall be manufactured to outside diameters, wall thickness, and respective tolerances as specified in ASTM D-3035 or D-2447. Bore hole piping shall be a minimum of SDR11. U-Bend shall be closely evaluated during design and be constructed of heavy wall SDR9 minimum.

5. All connections shall be made using heat fusion in compliance with IGSHPA standard 1D "Pipe Joining Methods". Piping must be pressure tested before it is installed in the well.

6. Pressure grout the entire well using a pressure pump and tremie pipe, working from the bottom up. Grout material shall be thermally enhanced bentonite grout with a thermal conductivity value of 1.0.

7. Designer should evaluate if glycol is required for the design during the winter months.

8. Design shall comply with all EPA requirements and standards.

9. System shall be flushed and cleaned per OSDM section 23 25 00 HVAC Water Treatment. Piping shall remain capped during installation to prevent debris from entering the piping.

10. Geothermal field shall have electronic pipe markers. Electronic pipe markers shall be 4" diameter high-density polyethylene sphere type marker. A marker locator shall be provided with the electronic pipe markers and shall be capable of sensing the pipe markers up to minimum five feet underground. The mark locator shall include an electronics package and lightweight hand held probe. All horizontal geothermal piping shall have line marker tape with a tracer wire.

1.05 SUPPLEMENTAL COOLING SYSTEMS

A. General – Supplemental cooling systems are for dedicated loads that require cooling outside the general requirements of the building in general, and thus impractical to be included as part of the central main cooling systems. Further, these loads are generally small and cooling is required year-around. These loads are best handled using direct expansion (Dx) systems.

B. System Design:

1. Systems shall be dedicated to the load served and be controlled by its own thermostat.

2. The unit shall be located indoors with exception that the condensing unit or condenser may be outdoors. Packaged indoor units with supply and exhaust air directed outdoors is also acceptable.

3. Units shall not be located over electronic equipment, or computers, or as prohibited by the Code.

1.05 SUPPLEMENTAL COOLING SYSTEMS (cont'd)

C. Applications:

1. Main Control/Equipment Room.

2. Elevator equipment room.

3. Remote offices – if an office is located in an otherwise un-air-conditioned part of the building such as an office in the area of the locker rooms, or a maintenance office adjacent to the boiler room.

4. Administration areas.

D. Design Requirements and Limitations:

1. Systems shall have low ambient operation to -20 deg. F or be provided with a full, outside air economizer.

2. Units serving widely varying loads shall have hot gas bypass and a head pressure control system.

3. Suction and hot gas lines shall be insulated on all piping exterior to the unit.

4. Liquid lines shall be insulated if they run through attics or other areas where the ambient temperature may elevate above the outdoor temperature.

5. Administrative Area – The main administrative area of a school which is determined to have significantly different operating hours than the remainder of the school shall be permitted to have a Dx cooling system in lieu of being served by the central chilled water plant. All of the following criteria must be met:
   a. The design day cooling load of the administrative unit (zone) is less than 10% of the total building cooling load.
   b. The administration area can be served by one air handling unit.
   c. The total cooling capacity of the unit does not exceed 15 tons (180 MBH).
   d. The central chiller water plant is not intended to run in the summer (except for unoccupied operation and humidity control).

1.06 CENTRAL PLANT WITH UNDERFLOOR AIR VENTILATION SYSTEMS

A. Central Heating Plant

1. Reference "Central Plant Variable Air Volume System with Hot Water Reheat Terminals"

B. Central Cooling Plant

1. Reference "Central Plant Variable Air Volume System with Hot Water Reheat Terminals"

1.06 CENTRAL PLANT WITH UNDERFLOOR AIR VENTILATION SYSTEMS (cont'd)

C. Air Systems

1. Variable Volume Air Handling Units
   a. Reference "Central Plant Variable Air Volume System with Hot Water Reheat Terminals"
   b. Air handling system design for underfloor air distributions shall follow the recommendations as outlined in the Underfloor Air Distribution (UFAD) Design Guide (RP-1064) published by ASHRAE. Air handling system design for displacement ventilation systems shall follow the recommendations as outlined in the System Performance Evaluation and Design Guidelines for Displacement Ventilation (RP-949) published by ASHRAE.

2. Single Zone Variable Volume Air Handling Units
   a. Reference "Central Plant Variable Air Volume System with Hot Water Reheat Terminals"
   b. Air handling system design for underfloor air distributions shall follow the recommendations as outlined in the Underfloor Air Distribution (UFAD) Design Guide (RP-1064) published by ASHRAE. Air handling system design for displacement ventilation systems shall follow the recommendations as outlined in the System Performance Evaluation and Design Guidelines for Displacement Ventilation (RP-949) published by ASHRAE.

D. Ductwork Distribution Systems

1. Medium/High Pressure Supply Air Ductwork
   a. Reference "Central Plant Variable Air Volume System with Hot Water Reheat Terminals"

2. UFAD Exterior Zone Variable Air Volume Fan-Powered Reheat Terminal Units.
   a. Terminal units shall be located below the raised floor and shall control the flow of air to the space based on a space temperature sensor. Terminal units should be located for easy access to allow for maintenance.

   b. Each terminal unit shall include a fan and a supply air valve oriented in series. The fans shall operate continuously while the space is in heating mode. Refer to Figure I-2.

   c. On a fall in space temperature, the damper in the terminal unit will open and allow air from above the raised floor into the terminal fan. On a continued fall in space temperature, the heating coil control valve at the terminal unit shall be opened to maintain space set point.

3. Low Pressure Supply Air Ductwork
   a. Reference "Central Plant Variable Air Volume System with Hot Water Reheat Terminals"

1.06 CENTRAL PLANT WITH UNDERFLOOR AIR VENTILATION SYSTEMS (cont'd)

4. Return/Relief Air System for Variable Volume Air Handling Units
   a. Reference • Central Plant Variable Air Volume System with Hot Water Reheat Terminals •

5. Return/Relief Air Systems for Single Zone Constant Volume/Variable Temperature Air Handling Units
   a. Reference "Central Plant Variable Air Volume System with Hot Water Reheat Terminals"

6. Air Distribution Devices
   a. Underfloor Air Systems – the Design Professional shall determine the final system design relating to either use active damper controlled or passive air distribution devices. If passive devices are selected the plenum pressure controls dampers shall be zoned to provide satisfactory space temperature control by controlling the plenum pressure.

   b. On a fall in space temperature, the zone pressure control damper pressure set point shall be reset downward. On a rise in space temperature the pressure control set point shall be increased.

E. Ventilation Air Systems

1. Reference "Central Plant Variable Air Volume System with Hot Water Reheat Terminals"

F. Exhaust Air Systems

1. Reference "Central Plant Variable Air Volume System with Hot Water Reheat Terminals"

G. Supplemental Heat Systems
1. Reference "Central Plant Variable Air Volume System with Hot Water Reheat Terminals"

H. Electronic Temperature Control System
1. The building shall be split into different zones according to air systems, exterior exposure, and general occupied schedules. Example: Administration area shall be a separate zone; classrooms with southern exposure shall be a separate zone from classrooms with northern exposure, etc.
2. Each occupied space in the building shall include space temperature control.
3. Zones shall be placed into occupied/unoccupied mode through the temperature control computer.
4. Variable volume air handling units shall provide air to match a discharge air temperature set point from the temperature control computer. Small, direct-expansion cooling systems shall be controlled from a return air set point in lieu of discharge air set point.

1.06 CENTRAL PLANT WITH UNDERFLOOR AIR VENTILATION SYSTEMS (cont'd)

5. Single zone air handling units shall be controlled from a space-mounted temperature sensor. Space-mounted or return air humidity sensors shall be included in the event reheat is included for humidity control of gymnasiums and student dining. A return duct CO2 sensor shall be provided for large single zone variable occupancy systems utilizing demand ventilation control.
6. Through the temperature control system, it shall be possible to reset the space temperature sensors to a night setback temperature of 55 degrees Fahrenheit for heating to reduce energy consumption.
7. During unoccupied hours, the UFAD terminal fans shall cycle as required to maintain night setback temperatures.

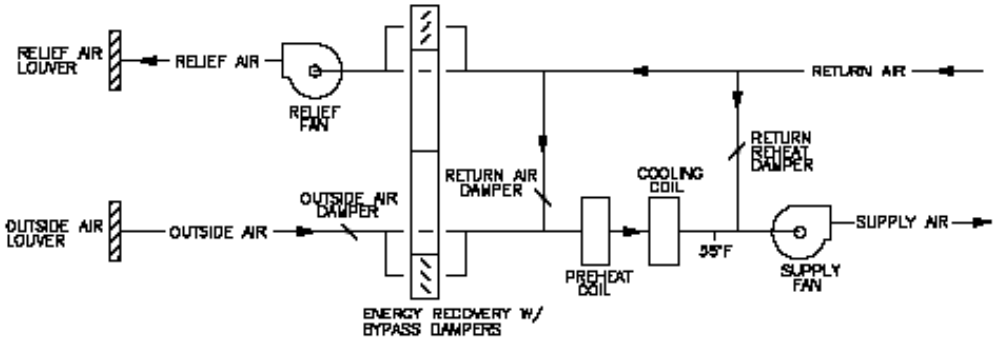

FIGURE I–1

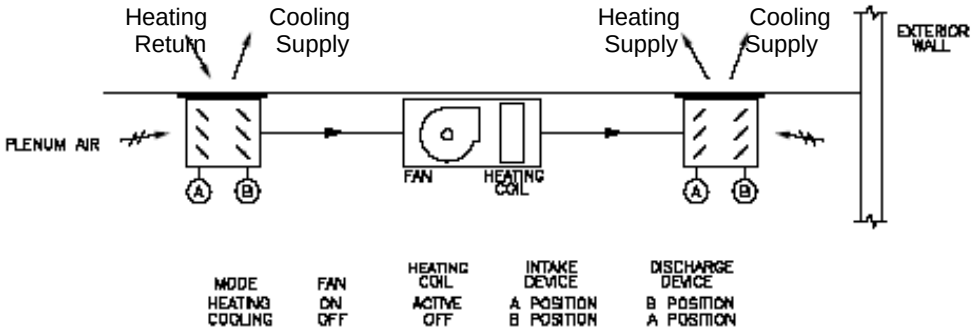

FIGURE I–2
UFAD EXTERIOR ZONE

1.07 CENTRAL PLANT WITH DISPLACEMENT VENTILATION SYSTEMS

A. Central Heating Plant

1. Reference "Central Plant Variable Air Volume System with Hot Water Reheat Terminals"

1.07 CENTRAL PLANT WITH DISPLACEMENT VENTILATION SYSTEMS (cont'd)

B. Central Cooling Plant

1. Reference "Central Plant Variable Air Volume System with Hot Water Reheat Terminals"

C. Air Systems

1. Variable Volume Air Handling Units
   a. Reference "Central Plant Variable Air Volume System with Hot Water Reheat Terminals"

2. Single Zone Variable Volume Air Handling Units
   a. Reference "Central Plant Variable Air Volume System with Hot Water Reheat Terminals"

D. Ductwork Distribution Systems

1. Medium/High Pressure Supply Air Ductwork
   a. Reference "Central Plant Variable Air Volume System with Hot Water Reheat Terminals"

2. Variable Air Volume Reheat Terminal Units
   a. Reference "Central Plant Variable Air Volume System with Hot Water Reheat Terminals"

3. Low Pressure Supply Air Ductwork
   a. Reference "Central Plant Variable Air Volume System with Hot Water Reheat Terminals"

4. Return/Relief Air System for Variable Volume Air Handling Units
   a. Reference • Central Plant Variable Air Volume System with Hot Water Reheat Terminals •

5. Return/Relief Air Systems for Single Zone Constant Volume/Variable Temperature Air Handling Units
   a. Reference "Central Plant Variable Air Volume System with Hot Water Reheat Terminals"

6. Air Distribution Devices
   a. Displacement Ventilation devices shall be specifically designed and tested by the manufacturer for the application. Design professional shall provide a space air distribution analysis as part of the design to assure the devices are located properly.

c. When a displacement ventilation system serves a space with an exterior wall a supplemental heating system shall be provided at the exterior wall.

1.07 CENTRAL PLANT WITH DISPLACEMENT VENTILATION SYSTEMS (cont'd)

E. Ventilation Air Systems

1. Reference "Central Plant Variable Air Volume System with Hot Water Reheat Terminals"

F. Exhaust Air Systems

1. Reference "Central Plant Variable Air Volume System with Hot Water Reheat Terminals"

G. Supplemental Heat Systems

1. Reference "Central Plant Variable Air Volume System with Hot Water Reheat Terminals"

H. Electronic Temperature Control System

1. The building shall be split into different zones according to air systems, exterior exposure, and general occupied schedules. Example: Administration area shall be a separate zone; classrooms with southern exposure shall be a separate zone from classrooms with northern exposure, etc.

2. Each occupied space in the building shall include space temperature control.

3. Zones shall be placed into occupied/unoccupied mode through the temperature control computer.

4. Variable volume air handling units shall provide air to match a discharge air temperature set point from the temperature control computer. Small, direct-expansion cooling systems shall be controlled from a return air set point in lieu of discharge air set point.

5. Single zone air handling units shall be controlled from a space-mounted temperature sensor. Space-mounted or return air humidity sensors shall be included in the event reheat is included for humidity control of gymnasiums and student dining. A return duct CO2 sensor shall be provided for large single zone variable occupancy systems utilizing demand ventilation control.

6. Through the temperature control system, it shall be possible to reset the space temperature sensors to a night setback temperature of 55 degrees Fahrenheit for heating to reduce energy consumption.

7. During unoccupied hours, the air handling unit shall cycle as required to maintain night setback temperatures.

1.08 SYSTEMS FOR SMALL ADDITIONS TO EXISTING BUILDINGS

A. General – The intent of this section is to set forth criteria for small building additions to existing schools that are being renovated. Building additions of 8,000 square feet and smaller may use the systems described in this section. Additions larger shall follow the criteria of the pre-approved main systems listed in this section or as proposed per section 8410-D.

B. Fan Coil Systems

1. Fan Coil Units shall be four pipe hot, chilled water units with separate heating and cooling coils and DDC electronic controls.

2. Central Heating Plant
Reference "Central Plant Variable Air Volume System with Hot Water Reheat Terminals" of this section.

3. Central Cooling Plant

   a. Reference "Central Plant Variable Air Volume System with Hot Water Reheat Terminals" of this section.

4. Ventilation Air System

   a. The system shall have a dedicated 100% outside air ventilation system following the guidelines of this section "Water Source Heat Pump System", subparagraph 5, Ventilation Air System.

5. Ductwork Distribution Systems

   a. Shall follow section "Water Source Heat Pump System", subparagraph 6. Ductwork Distribution System.

6. Other systems required to complete the project such as kitchens, etc. shall follow the applicable requirements of this section.

7. Fan Coil System Temperature Control

   a. Each occupied space in the building shall include space temperature control.
   b. Zones shall be placed into occupied/unoccupied mode by the temperature control computer via schedule or over-ride at the graphic screen or zone thermostat push-button.
   c. The temperature control system shall reset the space temperature sensors to a night setback temperature of 55 degrees Fahrenheit. During unoccupied hours, fan coil units shall cycle as required to maintain night setback temperatures.
   d. Graphic screens shall be included for each fan coil unit, in addition to the screens for the boiler plant, chiller plant, circulation pumps and other HVAC primary components.
   e. Fan coil units shall be controlled to cycle during unoccupied hours in order to maintain space relative humidity in the range of 60% to 65% RH.

1.08 SYSTEMS FOR SMALL ADDITIONS TO EXISTING BUILDINGS (cont'd)

C. Unit Ventilator Systems

1. Unit ventilators shall be four pipe hot and chilled water units with individual heating and cooling coils. Units shall have face and bypass dampers for capacity control and outside and return air dampers for economizer control.

2. Units shall be equipped with DDC electronic controls, including hot and chilled water valves, actuators for the F&B dampers and economizer. A variable speed controller shall be provided to vary the speed on the supply fan. The unit sequence of operation shall be VAV single zone. The ventilation air shall be controlled by a return air CO_2 sensor to provide a demand control ventilation sequence.

3. Central Heating Plant
   a. Reference "Central Plant Variable Air Volume System with Hot Water Reheat Terminals" of this section.

4. Central Chilled Water Plant
   a. Reference "Central Plant Variable Air Volume System with Hot Water Reheat Terminals" of this section.

5. Other systems required to complete the project such as kitchens, etc. shall follow applicable requirements of this section.

6. Unit Ventilator Temperature Controls

   a. Units shall be a single zone VAV unit with modulating fan speed, economizer, face and bypass dampers, a heating coil and serpentine cooling coil.
   b. Start-Stop – optimal start, morning warm-up and cool down shall be provided thru the digital control system.
   c. Minimum outside air shall be under control of a demand control ventilation sequence to maintain the CO_2 level in the room to less than 700 ppm above outside air condition.
   d. A zone (one sensor for each room) humidity sensor shall override the system off mode if the humidity in the space is greater than 60% RH for more than 8 hours.
   e. The fan speed, economizer, face and bypass dampers, heating, cooling coil valves and dehumidification mode shall be controlled in sequence from a room-temperature and humidity sensor and unit mounted CO_2 sensor.
   f. Economizer shall be enabled when the outside air temperature is below 65 degrees F. and the outside air enthalpy is below 30 BTU/LB.

END OF SECTION

SECTION 8500

TECHNOLOGY SYSTEMS

1.01 INTRODUCTION

A. The Technology Systems Plans and Specifications shall be prepared in accordance with the latest edition of the BICSI Telecommunications Distribution Methods Manual (TDMM), the requirements of the OSDM as outlined herein, and shall be designed and approved by an RCDD with a minimum of 3-years experience. Refer to the OSFC Technology Phase Submission Form for submittal requirements.

B. The Telecommunications Plans shall provide a minimum level of content as described herein. The guide below is intended to convey the basic information that is required to be included in Telecommunications Systems Plans. Additional information may be required based upon the scope and nature of the design. The guide below is not intended to set forth an exact organizational or numbering format for Telecommunications Plans.

1. T0 Site Plans - Projects where new telecommunications services are being provided shall be included with a site plan. The plan shall indicate proposed routing of incoming services including any required underground or aerial pathways. Site plan should also indicate approximate location within building outline of any exterior pathways' termination point as well as inter-building backbone cabling in a Campus setting. This information may be included on the Electrical Site Plan.

2. T1 Composite Plans - Complete building composite floor plans for each floor at a scale no less then 1"=20'-0". The composite floor plans shall indicate locations of Telecommunications Rooms, Cable assignment for each TR, major cable pathways including cable tray and conduit risers. Other information which may be included on the plans are security zones, wireless access points, and security camera locations.

3. T2 Floor Plans– Building floor plans at a scale of not less then 3/32"=1'-0", broken down with appropriate match lines for large buildings and key plan on each sheet to correspond to plan location within building. Floor plans shall include all technology outlets and equipment. Where loose equipment is presented in a table format, drawing symbols for these items may be omitted. Floor plans must include room numbers and names within the sheets for each space.

4. T3 Telecommunications Spaces – Large scale plans of the Telecommunications Spaces at a scale of not less then ½"=1'-0". The large scale plans shall include a floor plan, rack elevations and wall elevations for each telecommunications space. Floor plans shall indicate all equipment including racks, cabinets, ladder rack, conduit sleeves, etc. In addition, electrical requirements such as outlet types and locations must be referenced to coordinate with electrical drawings. Rack elevations must be to scale and show actual equipment to be installed for each rack. Where equipment size varies based upon manufacturers used, the largest equipment shall be included in the elevations. Wall elevations must show, at a minimum, dedicated spaces with approximate size for the various wall mounted items of equipment for the various systems.

5. T4 Details - Technology details including symbol legends, system schematic wiring diagrams, system riser diagrams, specialty details for equipment mounting, etc. The technology details must provide a clear and accurate picture of each system and the interconnectivity associated with that system and the integration between systems.

6. Miscellaneous Drawings. Additional drawings that can be used in conjunction with the above-listed drawings.

C. The Technology Designer should endeavor to reduce the quantity of Telecommunications Rooms (TRs) by centralizing the TRs and/or using one TR to serve multiple floors. For example, in a 3-story building, place the TR on the second floor and serve the 1st, 2nd, and 3rd floors from the same closet. The Technology Designer should consider locating the Equipment Room (ER) in a central building location if feasible. Coordinate the location, quantity, and size of the ER and TRs required early in the design process with the Design Professional.

D. The Technology Designer should endeavor to centralize as many Technology and Control Systems as possible for the District into one school building or Network Operations Center (NOC) and interconnect the buildings and systems via fiber-optic cables whenever economically feasible.

E. The Technology Designer should consider using the savings from the centralization of systems to offset the cost of inter-building, fiber-optic cabling. Capital costs for Inter-Building, Fiber-Optic Cables can be included in the project, provided the overall Project Technology Budget is not exceeded.

F. E-Rate grant opportunities for “Internal Connections” shall be considered for all OSFC projects. The Designer shall coordinate all Technology Designs and Schedules with the Construction Manager, the School District, and the eTech Ohio E-Rate Coordinator.

G. Since many of the Technology Systems could be operational for life-safety purposes and building evacuation purposes, the Technology Designer is to connect these systems and their associated UPS units to the Building’s Emergency Generator System when available. Coordinate the electrical loads, outlet types, and circuit locations with the Electrical Design Engineer. These systems include:
1. Security Systems (CCTV, Access Control, and Intrusion)
2. Telecommunication rooms UPS circuits
3. Telephone System
4. Paging and Central Sound System

H. The Technology Designer shall assure all specifications require Contractors to submit shop drawings detailing the specific equipment provided for the project as well as O&M manuals containing project specific data. Generic equipment or system information is not acceptable. Additionally, requirements for “as-built” drawings from the Contractors for wiring diagrams, final system configurations, etc. are to be part of the specifications. The School District is to receive record documentation of the final actual installation of all technology systems.

I. The specification of Technology Equipment (computers, A/V displays, etc.) that have the Energy Star label is preferred, when applicable.

J. The Technology Designer shall coordinate specific requirements of extended learning areas (ELAs) with the School District. As a minimum, provide access to the data network and one (1) video port for each ELA.

K. The Technology Designer shall verify with the School District during the Programming Phase if they will be implementing any special technology applications that would affect the Technology or Facility Design. Examples would be "one-to-one" or "thin client" client computing.

1.02 TECHNOLOGY SYSTEMS

A. Each OSFC Construction Project for new and remodeled facilities shall provide the baseline Technology systems. Additional non-baseline (optional) systems shall be added based on budget limitations.

B. The Technology Designer shall design the following required Technology Systems for all new and remodeled buildings. Refer to the OSDM sections listed below for additional information:

1. COMMUNICATIONS – DIVISION 27

a. Section 27 05 26 -- Grounding and Bonding for Communications Systems.

b. Section 27 11 00 -- Communications Equipment Room Fittings.

c. Section 27 13 13 -- Communications Copper Backbone Cabling.

d. Section 27 13 23 -- Communications Optical Fiber Backbone Cabling.

e. Section 27 13 33 -- Communications Coaxial Backbone Cabling.

f. Section 27 15 13 – Communications Copper Horizontal Cabling.

g. Section 27 15 33 -- Coaxial Communications Horizontal Cabling.

h. Section 27 15 43 -- Audio-Video Communications Horizontal ***Transport System***.

i. Section 27 21 00 -- Data Communications Network Equipment.

j. Section 27 21 33 -- Data Communications Wireless Access Points.

k. Section 27 31 13 -- IP-Enabled PABX System.

l. Section 27 31 23 -- IP Only PABX System.

m. Section 27 41 17 – ***Digital*** Broadband Video RF Distribution System.

n. Section 27 41 19 -- Video Display Equipment.

o. Section 27 41 20 -- Interactive Audio-Video Equipment.

p. Section 27 41 25 -- Digital On-Demand Instructional Delivery System.

q. Section 27 51 21 -- Student Dining / Auditeria Sound Reinforcement System – High School.

r. Section 27 51 22 -- Student Dining / Cafeteria Sound Reinforcement System.

s. Section 27 51 23 – Central Sound and Paging System

t. Section 27 51 24 -- Gymnasium Sound Reinforcement System.

u. Section 27 51 25 -- Music Room Audio Program Playback System - Middle School.

v. Section 27 51 26 -- Music Room Audio Recording/Playback System - High School

w. Section 27 51 27 -- Classroom Sound Reinforcement System.

x. Section 27 53 13 -- Clock Systems.

2. ELECTRONIC SAFETY AND SECURITY – DIVISION 28

a. Section 28 13 00 -- Access Control System.

b. Section 28 16 00 -- Intrusion Detection System.

c. Section 28 23 00 -- Video Surveillance System.

d. Section 28 26 00 – Area of Refuge Intercommunication System

C. The following items summarize the Technology Systems provided. The Base Line (required) systems are listed as well as the Optional Systems.

1. TECHNOLOGY ELECTRICAL WORK

a. These items are generally bid out as the Technology Electrical Package and are usually included in the Project's Electrical Bid Package.

b. Back Boxes.

1) Includes back boxes and floor boxes that are part of the Technology system

c. Cable Tray

1) Includes an OSDM Compliant, wire mesh, Cable Tray system.

d. Conduits.

1) Includes Technology conduit sleeves and conduits back to the cable tray as per OSDM.

e. Entrance Conduits – typical.
   1) Includes an allowance for a typical Service Provider UG Conduit System - if you have an unusually long Entrance (greater than 400 feet) adjust as required.

f. Telecom Grounding.
   1) Includes Telecom Grounding System, Ground Bars, and Cable Tray Grounding.

g. Backboards.
   1) Includes Painted Plywood backboards in Telecom Closets.

h. Power.
   1) Includes Rack and Cabinet Power Conduits Stubs and pigtails to Junction Box only.
   2) Does NOT include Technology Power wiring -- part of Electrical Package.

2. TECHNOLOGY CABLING

a. This Section includes the Technology Data Cabling and is based on an OSDM Compliant CAT-5e ***or optional CAT - 6*** system.

b. User Cabling Drops, Faceplates and Jacks.
   1) Includes all Technology related Data Cables.

c. Patch Panels.
   1) Includes Data and backbone patch panels.
   2) Cable Organizers.

d. M/M & S/M Fiber Cabling.
   1) Includes internal fiber cabling and materials

e. Backbone Copper and Fiber Cabling.
   1) Includes internal copper and fiber cables.
   2) M/M fiber shall be 50 micron ***OM3*** laser optimized for new work special applications. 62.5 micron is optional, only for legacy systems.
   or
   3) IP-Enabled PBXs include copper backbone cabling and associated 110 blocks and patch panels. All-IP PABX systems may not require copper backbone cabling and associated 110 blocks and patch panels.

f. Fiber Patch Panels
   1) Includes fusion spliced ends for all M/M and S/M cables ***or preterminated fiber and associated cassette system.***

g. 110 Blocks.
   1) Includes miscellaneous backbone cable blocks -- PBX & Paging blocks in other sections.

h. Telecom Racks.

1) Includes Telecom Closet Racks, Cabinets and associated Cable Ladder Rack.

i. Monitor/Projector Brackets.

1) Includes projector ceiling brackets, conduits and monitor brackets (NO Electrical).

3. NETWORK ELECTRONICS

a. This Section includes the Network Electronics as based on an OSDM Compliant Network.

b. L-3 Core Switch.

1) Includes Layer-3 Chassis Core switch and associated Copper and Fiber Interfaces.
2) Includes 10/100/1000 TX ports for common devices and local 10/100/1000 switches.
3) Includes F/O ports for remote switches and WAN interface.
4) Switch shall include both 1GB and 10GB interfaces.

c. 10/100/1000 User Switches

1) ***Switches shall provide user ports equal to the number of devices plus 15% spare.***
2) ***Provide uplink ports with a minimum bandwidth ratio as follows:***
   a) 24:1 for ports used for computers, printers, and telephones
   b) 12:1 for wireless access points and multimedia devices and CCTV cameras

d. Wireless Access Points (APs).

1) 802.11n APs with full building coverage.
2) Includes CIPA Compliant System with building-wide coverage and rogue signal protection.

e. Wireless Controller/Switches.

1) Includes Central Wireless Controller, Control Software and Server Appliance.
2) Includes Location Tracking – as an Option.

f. Radius Authentication Server.

1) Includes Radius Server and Software for Network Authentication.
2) Assumes District supplied Authentication Data base.

g. POE

1) ***Provide power over Ethernet (PoE) ports to support all end devices that require it, plus 15% spare.***

h. UPS Units
   1) Includes UPS Units for Main and Auxiliary Telecom Rooms.
   2) Standby based on connection to Building Generator for all Technology Closets.
   3) Power Stub up to Junction Boxes in TE Item above.
   4) Electrical Circuits to Generator in Separate Electrical Package.

i. Fiber Patch Cords.

j. Copper Patch Cords.

4. IP-ONLY PABX SYSTEM

a. This section includes an IP-Only phone system based on OSDM requirements.
   1) The typical system shall include Voice Mail and carrier circuits interfaces – these are based on whether the District has a central, redundant, IP-Only phone system that links all buildings together. If a central, redundant, IP-Only phone system exists, then Call Processing, carrier circuits, and Voice Mail are provided at the central location and the remote buildings are interconnected over the fiber-optic WAN. The remote buildings ***shall*** have Survivable Remote Units for call processing in the event of a fiber WAN failure.
   2) Hosted Solution – Technology Designer to coordinate with the School District if a hosted IP-***Only*** PABX system is the District's preference. An OSFC variance shall be obtained if it is determined that a hosted IP-***Only*** PABX system is to be implemented. Specific items to review include:
      a) Method of incorporation into the designed technology system(s).
      b) Total cost of ownership / annual costs, etc.
      c) Training requirements.
      d) Cost for systems and equipment not located in the District and/or owned by the District is not OSFC funded.

b. IP-Only PBX
   1) An IP-Only PBX supports both IP phones and analog devices (FAXes, etc.) and IP Trunking between buildings.
   2) Includes software for connection to Central District IP-Only PBX.

c. Digital Display Speaker Phone IP-Instruments
   1) Includes classroom and administration phones as per OSDM.
   2) Refer to specification sections 273113 and 273123 which describe when full duplex speaker phones for classroom and other spaces could be optional.

d. 2 Wireless Phone Instruments
   1) Includes OSDM compliant wireless phones and chargers.

e. 2 Attendant Consoles
   1) Includes 2 Attendant, PC-based consoles, per OSDM.

f. Power Failure Transfer (PFT) Unit
   1) Includes Power Failure Transfer Unit for E-911 and emergency backup.
   2) Includes 2 analog PFT Emergency backup phones.

g. Interconnect Cables

h. Analog Trunk Interfaces
   1) Includes Analog Trunk Interfaces for E-911 Backup.

i. Analog Station Interfaces
   1) Includes Analog Station Interfaces for FAXes, etc.

j. Digital Trunk Interfaces – include a minimum of one of the following:
   1) PRI Interface (exception see above, add capacity as required at central location to support facility)
   2) SIP Trunk Interface (exception see above, add capacity as required at central location to support facility)

k. Voice Mail System
   1) Include a minimum of one mail box for each staff member located at facility plus miscellaneous mailboxes as required by District. (exception see above, if voice mail system is centralized provide additional mail licenses at central location to support facility)

l. Copper Patch Cords.

m. IP Trunking
   1) Includes IP trunking software for Inter IP-Only PBX Communication.

n. POE Switches
   1) Includes POE Ports for connection of all IP instruments.
   2) Includes additional L-3 Core Switch interfaces for the POE switches.

5. IP-ENABLED PABX SYSTEM – ***Optional if extending existing system***

a. This Section includes an IP Enabled Phone System based on OSDM Requirements.

   1) The system shall include Voice Mail and adequate circuits to local carrier to support outside call requirements. If this system is part of a district-wide phone system, then the Voice Mail and primary outside carrier circuit capacity may be provided from the central PBX location as long as the local system is connected (networked) to central PBX over the school district WAN.

2) Hosted Solution – Technology Designer to coordinate with the School District if a hosted IP-Enabled PABX system is the District's preference. An OSFC variance shall be obtained if it is determined that a hosted IP-Enabled PABX system is to be implemented. Specific items to review include:
   a) Method of incorporation into the designed technology system(s).
   b) Total cost of ownership / annual costs, etc.
   c) Training requirements.
   d) Cost for systems and equipment not located in the District and/or owned by the District is not OSFC funded.

b. IP-Enabled PBX.
   1) An IP Enabled PBX supports TDM, analog devices (FAXes, etc.), and IP Phones and IP Trunking between buildings.
   2) Includes software for connection to Central District PBX.

c. Digital Display Speaker Phone Instruments.
   1) Includes Classroom and Administration Phones as per OSDM.
   2) Refer to specification sections 273113 and 273123 which describe when full duplex speaker phones for classroom and other spaces could be optional.

d. 2 Wireless Phone Instruments.
   1) Includes OSDM Compliant Wireless Phones and chargers.

e. 2 Attendant Consoles.
   1) Includes 2 attendant consoles and busy lamp fields as per OSDM.

f. Power Failure Transfer (PFT) Unit.
   1) Includes Power Failure Transfer Unit for E-911 and emergency backup.
   2) Includes 2 Analog PFT Emergency backup phones.

g. Interconnect Cables.

h. Analog Trunk Interfaces.
   1) Includes Analog Trunk Interfaces for E-911 Backup.

i. Analog Station Interfaces.
   1) Includes Analog Station Interfaces for FAXes, etc.

j. Digital Trunk Interfaces - include a minimum of one of the following:
   1) PRI Interface (exception see above, add capacity as required at central location to support facility)
   2) SIP Trunk Interface (exception see above, add capacity as required at central location to support facility)

k. Voice Mail System

1) Include a minimum of one mail box for each staff member located at facility plus miscellaneous mailboxes as required by District. (exception see above, if voice mail system is centralized provide additional mail licenses at central location to support facility)

l. Copper Patch Cords.

m. IP Trunking
1) Includes IP trunking software for Inter PBX Communication.

6. CCTV SYSTEM – NEW SYSTEM IP BASED DESIGNS

a. This section includes the IP CCTV Camera System based on OSDM Requirements.
1) The system includes a typical CCTV Coverage system with internal and external cameras – both fixed and PTZ.
2) The camera coverage is typical of an urban school setting and includes complete building coverage – adjust as required if more coverage is required.

b. Interior Cameras
1) Includes interior dome, vari-focus camera, and UTP data cable.

c. Exterior Cameras
1) Includes exterior dome, vari-focus camera, housing, and UTP data and power cables.

d. Exterior PTZ Cameras
1) Includes exterior PTZ camera, housing, UTP data, power and control cables.

e. Power Supplies
1) Connected to technology closet UPS and building emergency generator circuit(s).
2) Includes POE Switches for powering internal cameras.

f. Control Units
1) Includes networked Central Networked Camera Servers.
2) Includes Central Network Attached Video Storage and associated Controllers.
3) Includes Central Network Storage Fiber-Channel Switch.
4) Includes Central KVM Switch.
5) Includes integration with Access and Intrusion System.
6) Includes Central Office Mic.
7) Includes Remote Client Viewing Software.

g. CCTV Cables
1) Includes UTP data cables and patch panels.

7. CCTV SYSTEM – LEGACY DVR BASED SYSTEMS ***- Optional***

a. This Section includes the CCTV Camera System based on OSDM Requirements.
   1) The system includes a typical CCTV Coverage system with internal and external cameras -- both fixed and PTZ.
   2) The Camera coverage is typical of an urban school setting and includes complete building coverage - adjust as required if more coverage is required.

b. Interior Cameras
   1) Includes interior dome, vari-focus camera, coax and power cable.

c. Exterior Cameras
   1) Includes exterior dome, vari-focus camera, housing, coax and power cable.

d. Exterior PTZ Cameras
   1) Includes exterior PTZ camera, housing, coax and power and control cables.

e. Power Supplies.
   1) Connected to technology closet UPS and building emergency generator circuit(s).

f. DVR Units
   1) Includes networked DVR with local KVM switch.
   2) Includes integration with Access and Intrusion System.
   3) Includes Central Office Mic.
   4) Includes Remote Client Viewing Software.

g. CCTV Cables
   1) Includes Coax patch panels.

8. ACCESS AND INTRUSION SYSTEM

a. This Section includes the Building Access Control AND Intrusion System based on OSDM Requirements.
   1) The system includes a typical Card reader, Motion Detector and Door Control system.
   2) The System is typical of an urban school setting and includes complete building coverage - adjust as required if more coverage is required.
   3) The system is based on complete integration with CCTV and Intrusion Detection System.
   4) Central District NOC Control Software and Consoles are NOT Included - Depends on District Configuration -- see above.

b. Motion Detectors ***- Optional***
   1) ***The Technology Designer shall verify use and coverage areas with the School District.***

c. Card Readers.
   1) Includes Proximity Readers with Keypads for Controlled Doors.
   2) Includes elevator Reader.
   3) Includes Tech Closet Reader.

d. Intrusion Panels.
   1) Includes Intrusion Control Panels.

e. Door Control.
   1) Access/Control Cables.

f. Power Supplies.
   1) Connect to Technology Room UPS and Building Emergency Generator Circuit(s).

g. Central Control Software is Optional -- see above.

9. PAGING & CENTRAL SOUND SYSTEM.

a. This Section includes the Building Central Sound and Paging System based on OSDM Requirements.
   1) The system is based on a micro-processor based two-way intercom, paging and program distribution system connected to the PBX System via a multi-zone paging adapter as per OSDM.
   2) The Central Office CD/FM Tuner is connected to the Paging System as per OSDM.
   3) The Central Office Emergency Evacuation Switch and Tone Generator are connected to the Paging System as per OSDM.
   4) An FM Antenna system is provided for feeding the various FM tuners located in the building.
   5) The Central Bell/Clock system is connected to the paging system.

b. Paging Speakers.
   1) Includes speaker and ceiling tile bridge or paging horn as required.
   2) Paging Speaker Cable.
   3) Includes paging speaker(s) and call-button cable installed in cable tray.
   4) All Educational space speaker(s) and call-button cables are home-run to Central Closet. Common area paging zones (i.e. corridors) may utilize daisy chain cabling for speaker(s) associated with that particular zone.

c. Call Buttons
   1) Technology Designer to review with District. Base line item, variance request if District elects not to include. Each Educational space to have wall-mounted call-in button. Review need for conduit/box rough-in for future if District elects not to include.

2) Call-button cabling is included in baseline system whether the call button is installed or not. Extend to speaker location if call button is not installed.

d. Paging Adapter.
1) Includes multi-zone microprocessor controlled paging adapter in central Telecom Closet.

e. Paging Blocks.
1) Includes 110 cross-connect blocks for multi-zone connections.

f. Paging Power Supplies.
1) Includes Amplified Speaker Power supplies -- connected to ` UPS/Generator.

g. Tone Generator.
1) Includes multi Tone Generator for emergency signals.

h. Emergency Switch.
1) Located in Central Office.

i. Central FM Tuner.
1) Located in Central Office.

j. Call Annunciator
1) Base line – Main office to have LCD/LED room call-in annunciator. Variance required if District elects not to include.

k. Central CD / MP3 Player.
1) Located in Central Office.

l. FM Antenna.
1) FM Amplifier Coax Cabling.

m. Admin. Console
1) System Programming Console.

n. Mass Notification System - Optional
1) Additional features may be added to the paging system to provide mass notification capabilities.

10. WIRELESS CLOCK SYSTEM

a. This Section includes the Building Wireless Clock System based on OSDM Requirements.

b. Wireless Clocks
1) Single sided in rooms, double sided in hallways
2) Wireless Clock Guards as required -- Gym areas, etc.

c. Wireless Transmitter and Receiver and Antennas
1) Larger buildings may require additional transmitters

d. Wireless Tone Generator and Scheduling System
   1) Includes interface to Paging System

11. CLASSROOM A/V SYSTEMS

a. This Section includes the Classroom and Misc. A/V Systems based on OSDM Requirements.

b. Technology Designer shall coordinate with other Design Professionals for an integrated classroom design to accommodate features such as daylighting.

c. The Design is based on Classroom projectors integrated with Sound Enhancement systems and MPEG Media Delivery and Scheduling.

d. The Central Media Server and Scheduling system is NOT included and is assumed to be centrally located at the District's NOC.

e. Classroom Projectors.
   1) Includes Network controlled/monitored Projector. Refer to 274119 for Lumen requirements.
   2) Projector is ceiling-mounted for normal throw or wall-mounted for short throw (for use with interactive whiteboard) and integrated with Classroom Sound and ***video sources.***
   3) Projector is integrated with Instructor's PC.
   4) Associated in-wall cabling is included.
   5) Web-based Control via Projector IP Connection. Projector Control solution shall utilize Web-based software and open platform hardware allowing various Projector manufacturers to be controlled.
   6) Ceiling Bracket for normal throw or Wall Bracket for short throw, and where not integrated with the interactive whiteboard.

f. Classroom Sound System & Speakers.
   1) Includes min of 4 speakers, IR or RF Receiver, Amp and 2 Mics.
   2) Integrated with Projector, PC, ***video sources,*** and STB.
   3) Amp is located at teacher Tech Center.

g. Classroom A/V Cabling.

h. Classroom DVD/**Blu-Ray** Player.
   1) Includes Standard DVD/***Blu-Ray*** player located at a teacher Tech Center.

i. Central DVD/***Blu-Ray*** Player.
   1) DVD/***Blu-Ray*** Player and MPEG Encoder for Central Usage.

j. Bulletin Board Unit.
   1) Includes BBS PC and associated MPEG Encoder.

k. Media Center Cart
   1) Includes 2 Media Center Cameras, Carts and MPEG Encoders.

l. Flat panel TVs for Selected Rooms.
   1) Includes wall mounted flat panel TV and associated STB.
   2) Bracket included in Technology TE Package.

12. SPECIALIZED AUDIO SYSTEMS

a. This Section includes the Specialized Audio Systems based on OSDM Requirements.
   1) Note that not all systems are required in every building type.

13. REQUIRED SYSTEMS -- IF NO NOC EXISTS

a. This Section includes Systems that must be added to the Estimate if there is NO centralized NOC Location for the District.

b. These systems are generally located at one building in the District and used to serve all District Facilities over a fiber-optic WAN.

c. The following systems are Base Line required systems if no NOC exists.
   1) Voice Mail if no Central IP-Enabled or IP-Only PBX Exists.
   2) PBX PRI Interface if No Central IP-Enabled or IP-Only PBX Exists.
   3) Access Control Software & Console if no Central Unit Exists.
   4) VOD Server if no Central VOD Server exists.
   5) VOD Control and Scheduling if no Central VOD Control exists.
   6) CATV Head End and Coax System if no MPEG Headend Exists.
   7) If the District has NO MPEG Headend for CATV, then provide a MPEG CATV District Head End - 24 or 48 Channel, as required.
   8) Redundant Central IP Call Processing Units if no Central IP-Only PBX Exists.

14. INTERACTIVE CURRICULUM TECHNOLOGY

a. This section includes various types of technology which specifically relates to interactive use within the educational space by the instructor and students alike. The Technology Designer shall review the various technologies that are available with the School District to determine what combination of system(s) should be selected that will meet the needs of the District, within the allotted Interactive Curriculum Baseline Budget. Note that some systems have minimum base line quantities suggested.

b. Interactive Systems for Consideration:

   1) Video-On-Demand

a) System shall consist of a control server and content server(s). Optional equipment may include MPEG receiver set-top boxes within the educational spaces, and MPEG encoders to inject sources such as DVD players, Cable TV tuners or Video Production carts. The control server shall provide all system title database operations and logging of system parameters. Content servers will be provided in quantities and locations as required to support the number of users, number of titles and network bandwidth.

b) Hosted Solution – Technology Designer to coordinate with the School District if a hosted video –on –demand solution is the District's preference. An OSFC variance shall be obtained if it is determined that a hosted video-on-demand solution is to be implemented. Specific items to review include:

.1 Method of incorporation into the designed technology system(s).

.2 Total Cost of Ownership / Annual Costs, etc.

.3 Training requirements.

.4 Cost for systems and equipment not located in the District and/or owned by the District is not OSFC funded.

2) Interactive White Boards ***/ Interactive Projectors***

a) System including either stand alone units or units with integrated projector. System shall be fixed mounted within room. System shall provide interface with instructor's workstation in the room and provide the ability to record, save and recall presentations. Systems may include an interactive writing surface or equipment that can transform any writing surface into an interactive surface. System may also utilize either wired or wireless connections to the instructor's workstation.

b) Suggested minimal Base Line quantities as a ratio of classroom (CR) to interactive white boards are as below formulas:

.1 Elementary (PK-5) – CR x 0.11 (round-up) = # of interactive white boards. (Example 35 x .11 = 3.85, round-up to 4 interactive white boards).

.2 Middle School (6 – 8) - CR x 0.15 = # of interactive white boards (Example 35 x 0.15 = 6).

.3 High School (9-12) – CR x 0.18 = # of interactive white boards (Example 35 x 0.18 = 7).

.4 Combination schools shall apply appropriate multiplication factor by grade level classroom count.

3) Interactive Tablets

a) System shall be wired or wireless, utilizing RF, 802.11, or Bluetooth technology. System shall provide interface with instructor's workstation in the room and the ability to record, save and recall presentations. System shall be of the integrated display type or non-display type tablet.

b) Suggested minimal Base Line quantities as a ratio of classroom (CR) to interactive tablets are as below formulas:

.1 Elementary (PK-5) – CR x 0.05 (round-up) = # of interactive tablets. (Example 35 x .0.05 = 1.75, round-up to 2 interactive tablets).

.2 Middle School (6-8) - CR x 0.15 = # of interactive tablets (Example 35 x 0.15 = 6).

.3 High School (9-12) – CR x 0.18 = # of interactive tablets (Example 35 x 0.18 = 7).

.4 Combination schools shall apply appropriate multiplication factor by grade level classroom count.

15. OPTIONAL SYSTEMS – Not Base Line Systems

a. This Section includes Optional Systems that can be added to the Estimate based on Local Requirements if the budget permits.

b. TV Studio.

c. Classroom MPEG STBs.
1) Includes MPEG STB for delivery of IP Video into Classroom.
2) Web-based Control via Projector IP Connection.
3) Bracket included in Technology TE Package.

d. ***Additional Digital Signage Locations***

e. High School Auditorium
1) The auditorium system is for Districts that construct a large formal auditorium and is only used for special situations.

f. Enhanced Security Package
1) Based on local conditions, select this option to add additional camera coverage and security enclosures for classroom projectors – added cost and based on local conditions.

g. AV Control Systems

1) Central control panels for classroom AV systems. Optional based on budget constraints.

h. Area of Refuge Assistance

1) The system shall be a multiplexed intercom system, designed specifically to meet the Area of Refuge Assistance communication requirements of the ADAAG and the OBC. During an emergency, building occupants can use the system to call for assistance from an Area of Refuge to either a local master station or to 911 services through the building telephone system.

2) The system shall consist of remote call-in stations in the areas of refuge (typically stairwells) and a master station. The system shall also provide telephone connections to the master station for access to 911.

3) Note that this system is listed under optional systems category, as it typically would not be installed as a baseline system. It is listed here to advise the Technology Designer to verify building requirements with the Project Architect, to determine if it is a code required system and integrate with the telephone system accordingly.

END OF SECTION

SECTION 8600

ELECTRICAL SYSTEMS

1.01 ELECTRICAL DISTRIBUTION

A. Electrical systems distributed throughout the building shall be based upon the 480-volt or 208-volt, three-phase configuration.

B. Transient voltage surge protection and lightning arrester devices shall be located on main service distribution equipment. Transient voltage surge protection shall be provided on branch distribution electrical equipment serving electronic equipment.

C. Current carrying conductors shall be a minimum No. 12 American Wire Gauge. Conductors shall only be copper. Conductor size No. 12 and No. 10 may be stranded or solid type. Conductors larger than No. 10 shall be stranded. Aluminum lugs for terminating copper conductors are acceptable. At the Electrical Design Professional's discretion, along with school district's approval, aluminum conductors may be used for service entrance wiring, branch circuit feeders to panelboards, and distribution panels. Aluminum conductors shall not be used as branch circuit wiring to light fixtures, receptacles, or mechanical/electrical motor circuits. Minimum size aluminum conductor shall be No. 6.

D. Current carrying conductors shall be installed in conduit systems conforming to the National Electrical Code.

E. Continuous equipment grounding conductors shall be installed in all circuits bonded to all ground lugs, bussing, switches, receptacles, equipment frames, etc., per the National Electrical Code. The main facility grounding field electrode system to ground shall be 5 ohms or less.

F. Electrical systems main service equipment shall be designed with a 15 percent spare amperage capacity and 20 percent spare space capacity. Panel boards shall be designed up to 80 percent of capacity and be provided with a minimum of six (6) spare over current protection devices. Provide spare over current protection devices in branch distribution panelboards and main service equipment boards.

G. Electrical energy distribution equipment shall be located in dedicated electrical rooms or on mechanical decks. Main electrical service (switchboards) distribution equipment shall not be located in the main heating or cooling generating room. Branch circuit distribution panelboards recessed in corridor walls will not be acceptable.

H. Coordinate service entrance requirements with local utility service companies for electrical energy, telephone, and cable television. Separate entrances may be required depending on placement of utility services.

I. Dry type transformers shall be ***type TP-1 in compliance*** with the Department of Energy Policy Act of 2005 ***or NEMA Premium efficient transformers complying with the*** United States Department of Energy Candidate Standard Level 3 (CSL3) per 10 CFR Part 430 dated July 2004.

J. Electrical branch circuits to five (5) horsepower, 3-phase, and larger motors for air-handling units, exhaust fans, pumps, chillers, and condensing units shall be provided with phase loss protection. Protection shall prevent equipment from single phasing. Phase loss protection equipment shall be integral to starters or variable frequency drives serving the equipment.

K. Voltage drop for feeders between the service entrance equipment and the branch-circuit distribution equipment shall conform to the requirements of ASHRAE standard 90-1-***2007.***

L. Emergency power shall be delivered by an on-site, standby power generator. Provide emergency power distribution to serve required systems per the NEC and the Ohio Building Code including:
1. Emergency egress and exit lighting systems indicated in section 1.02.
2. Fire Alarm System.
3. Security Systems (CCTV, Access and Intrusion).
4. Telecommunication Rooms UPS Circuits.
5. Telephone System.
6. Paging and Central Sound System.

M. Coordinate emergency circuit locations, UPS electrical requirements, and electrical loads with the Technology Designer.

N. The intent of connecting standby power to selected components of the HVAC system is to provide an opportunity to limit damage from freezing weather during a power outage of short duration. The following components are not required to be connected to the standby power source and are optional within budgets:

1. Exterior heat tracing circuits.
2. DDC system controllers and components related to Remote alarming.
3. Air handling unit pre-heat coil (heating coil) run-a-round pumps.
4. Cooling tower basin heaters.
5. Chilled-water circulating pump, when used for Chiller freeze protection.
6. Independent, separate raceway, wiring, and transfer switches shall be provided for emergency life safety systems and non-emergency standby systems.

O. The overall electrical distribution system power factor as seen by the local electric utility company shall be greater than the minimum factor established by local electric utility serving the building.

P. Within the base building electrical cost, the Electrical Design Professional has the option of including a digital sub-metering device within the main electrical switchboard to monitor electrical usage voltage and current.

1.02 LIGHTING

A. Interior instructional spaces shall be artificially illuminated with energy-efficient and high-efficiency fluorescent light fixtures with electronic ballasts and lamps. The Design Professional has the option of providing fluorescent lighting with electronic, digital dimming ballasts connected to photo-electric cells sensing sunlight for automatic illumination level control for daylight harvesting.

B. ***At the Electrical Design Professional's discretion, the interior instructional spaces may be artificially illuminated with fluorescent linear direct/indirect fixtures, pendant mounted. With this option the Design Professional shall give consideration to raising ceiling heights and building structure heights to accommodate distance from the floor elevation to the bottom of pendant fixtures.***

D. ***When daylighting strategies per chapter 7 are implemented, provide photo-cell control of lights/lamps in the room.***

E. High volume spaces such as gymnasiums ***shall be illuminated with high-efficiency or linear fluorescent-type high-bay fixtures where mounting is 40 feet or less with metal enclosure and wire guard.***

F. ***Other high volume spaces within the facility shall be illuminated using a combination of lamps, ballast and fixtures that are the most energy efficient meeting illumination levels and functionality of the space.***

G. The minimum illumination (footcandle) levels shall conform to the established IIIluminating Engineers Society guidelines. See illumination chart at the end of this section. Footcandle calculation shall be developed by using the room cavity ratio method with work plane surface being 30 inches above the floor. Ceiling, wall, and floor material reflectances shall be verified with the Electrical Design Professional.

H. ***Lighting designs shall comply with Illuminating Engineers Society recommended practices entitled "Lighting for Educational Facilities and Sports and Recreational Area Lighting".***

I. Emergency means of egress lighting shall be provided per local and Ohio Building Code requirements. The following areas shall have emergency illumination whether having natural illumination or not:

1. Exits and exit access corridors.
2. Small and large assembly areas.
3. Locker rooms.
4. Student restrooms.
5. Main and other dedicated electrical rooms.
6. Main mechanical room and other mechanical decks.
7. Emergency power equipment location.
8. Administration and other building control areas.
9. Kitchen/student dining.
10. Interior instructional space without natural illumination.
11. Rooms with occupant load over 50 people.
12. Exterior side of exterior exit doors

J. Light fixtures shall be controlled by switches on a per room basis where fixtures are located. Circuit breakers will not be acceptable for turning lighting “on” and “off”.

K. Exterior parking areas shall be illuminated with high-intensity discharge lamp ***and light-emitting diode (LED)*** type light fixtures.

L. Auditeria/student dining space shall be equipped with theatrical type lighting controlled by dimmer banks and control consoles.

M. Computer labs shall be illuminated with fluorescent light fixtures equipped with parabolic type lens, recessed direct/indirect fluorescent fixtures with perforated lens or linear pendant fluorescent direct/indirect fixtures suitable for computer screens, to a visual comfort probability level of 80.

N. In instructional spaces when lighting is provided over the primary instructional wall markerboard/chalkboard, this lighting shall be oriented so the long dimension of the fixture is parallel with markerboard/chalkboard. The remaining lighting in the space may be run parallel or perpendicular to main instructional wall.

O. Provide site lighting per Chapter 3, Section ***3211***.

P. Light fixtures located in gymnasiums and auxiliary gymnasiums shall be equipped with protective wire guards.

Q. Exit signs shall be wall mounted, where possible, in lieu of ceiling mounted.

R. The use of incandescent type lighting shall be restricted to where recommended by the function of the space. The incandescent lamps shall be rated for 130-volt rugged service.

S. Art rooms shall be provided with supplemental incandescent track lighting in middle schools and high schools.

T. Options shall be investigated for control of exterior and interior corridor lighting by direct digital control by the energy management system.

U. Interior lighting shall be controlled by occupancy sensors, automatic timed lighting controlled system or a combination of both to comply with ASHRAE 90.1-***2007***. Exterior lighting shall be controlled by photo-sensor, astronomical time clock, or temperature control system to comply with ASHRAE 90.1-***2007*** to automatically turn lighting off when sufficient daylight is available.

V. Darken fixture above projection surface from multi-level switching in classrooms and labs.

W. Interior and Exterior lighting allowable power densities shall be in compliance with ASHRAE 90.1-***2007***.

X. Interior lighting allowable power densities shall be 90 percent of allowable under ASHRAE 90.1-***2007*** in compliance with ANSI/ASHRAE/USGBC/IEC Standard 189.1-2009 - "Standard for Design of High Performance Green Buildings" article 7.4.6.1. The Design Professional shall include as part of the construction document phase submission the Department of Energy COMcheck interior lighting report documenting compliance.

Y. Design Professional's estimate of performance for light loss factors shall include the following:

1. Decrease in lamp lumens output due to aging (lamp lumen depreciation-LLD)

2. Accumulation of dirt and dust on lamp and luminaire surfaces (luminaire dirt depreciation-LDD)

3. Ballast factor and losses of specific type of lamp ballast

SCHOOL LIGHTING LEVELS - *2011*	
ROOM TYPE CLASSIFICATION	RECOMMENDED DESIGN FOOTCANDLES **DIRECT LIGHTING(1)**
ADMINISTRATIVE	
Offices/Receptionist	***40***
Storage Rooms	***15***
Restrooms	***15***
Conference/Resource Rooms	***40***
Health Clinic	***40***
Teacher Prep/Workroom	***40***
CLASSROOMS-GENERAL	***40***
Art Rooms/Kiln	50
Modular Technology Labs	***40***
CADD Labs	30
Industrial Tech/Production Labs	***50***
Computer Labs	***30***
Graphics Labs	***40***
Life Skills Labs	50
Science Labs	50
Laundry Rooms	***30***
Music Rooms	***30***
Large Group Instruction Rooms	***40***
MEDIA CENTER	***30***
Active Areas	***30***
Inactive Areas	***20***

SCHOOL LIGHTING LEVELS - *2011*	
ROOM TYPE CLASSIFICATION	RECOMMENDED DESIGN FOOTCANDLES **DIRECT LIGHTING(1)**
ATHLETIC AREAS	
Gymnasium - Elementary School	***30***
Gymnasium - Middle School	50
Gymnasium - High School	***50***
Multi-use P.E. Rooms	50
Locker Rooms	***15***
STUDENT DINING/AUDITERIAS	
Assembly	20
Stage/Work Lights	***30***
Make-up/Dressing Rooms	***30***
Theatrical Control Room	30
Equip room with dimmable incandescent lighting offering 10-foot candles of illumination.	
STUDENT DINING(Used for testing)	***40***
Cooking	***50***
Food Preparation	***50***
Serving Line	***50***
Ware Washing	***50***
ELECTRICAL ROOMS	20-30
MECHANICAL ROOMS	30
PARKING AREA	1 (3)
DRIVEWAYS	.5 (3)
CIRCULATION AREAS	
Building Entries	5-10 (3)
Corridors	***15***
Corridors with Lockers	***15***
Stairways	***10***
(1) See article 1.02 Lighting, page 8600-5, for lighting maintenance.	
(2) Foot candles shall comply with local health department regulations	
(3) Foot candles shall conform to section 3211.	

CONSIDERATIONS

1. ***Providing minimum or no building night lights allows background security if undesired entry occurs with visible light.***
2. ***Parking lot lighting shall be circuited to allow building management system to darken unnecessary lighting during unoccupied periods.***

1.03 WIRING DEVICES

A. General purpose use, 120-volt duplex receptacles shall be of standard grounded type.

B. Separate receptacles located within instructional spaces shall be provided for general purpose uses and for computer/video technologies.

C. Instructional spaces shall be provided with a minimum of four (4) general use receptacles, as well as double duplex receptacles next to computer/video technologies ports. It is not mandatory to have the double duplex receptacles for any computer/video technology ports that receive power via Power Over Ethernet (POE). Coordinate locations of POE ports with Technology Designer.

D. Each space or room shall be provided with a minimum of one, 120-volt receptacle.

E. General purpose receptacles in corridors shall be spaced a maximum of 50 feet apart.

F. Office areas, conference rooms, and teacher workrooms shall be provided with a minimum of four (4) receptacles.

G. Duplex receptacles within 6 feet of plumbing fixture units shall be ground fault protected. These receptacles shall be protected by a ground fault circuit breaker or an integral ground fault device.

H. A maximum of four (4) computers shall be on a single 20-amp, 120-volt electrical circuit.

I. Instructional space lighting shall be controlled by two (2) switches. One switch shall control the inboard lamps and the other switch shall control the outboard lamps in each fixture located in the space. ***For audio/visual presentation mode, place fixture(s) over markerboards/smartboards on the outboard lamp switch.***

J. Key-type switches protected with wire guards shall be used to control lighting in gymnasiums, auxiliary gymnasiums, and locker rooms. Nonprotected key switches shall be used to control lighting in corridors, large group restrooms, and other public spaces. Instructional type spaces shall be controlled by toggle-type switches.

K. Provide an exterior, weatherproof ground fault protected duplex receptacle outside each main exterior door.

L. Electrical receptacles serving food service equipment not located against walls shall be mounted above the floor line on pedestal-type mountings.

M. Pre-kindergarten/kindergarten classrooms and their auxiliary spaces shall have duplex, tamper-resistant receptacles installed.

N. Interior lighting shall be controlled by occupancy sensors, automatic timed lighting controlled system or a combination of both to comply with ASHRAE 90.1. Exterior lighting shall be controlled by photo-sensor or astronomical time clock to comply with ASHRAE 90.1. to automatically turn lighting off when sufficient daylight is available.

1.04 OUTLET LOCATIONS

ELECTRICAL OUTLET DEVICE TYPE *(1)*	Masonry Wall, Base (Starter) Course Height 4 inch | 8 inch Mounting Height Above Floor to Bottom of Outlet (Device) Box	
Receptacle outlets, microphone outlets (jacks), equipment outlets (jacks), television outlets (jacks), portable telephone outlets, computer outlets, etc.		
* General throughout	20"	20"
* Mechanical equipment rooms	52"	48"
* Above counter tops 30"H	36"	40"
36"H	44"	48"
48"H	52"	56"
* Above backsplash top	2" minimum	2" minimum
* Above radiators	6" minimum	6" minimum
* Above or adjacent to lavatories	44"	48"
* Behind domestic refrigerators	52"	56"
* Behind domestic washers and dryers	36"	32"
* Serving domestic dishwashers	2"	2"
* Wall-mounted telephone outlets	44"	48"
* Telephone/video control	44"	48"
Toggle switches	44"	44"
Recessed motor controllers	60"	56"
Electric panels, terminal cabinets, etc., to center of tub or box	50"	48"
Clocks	Near ceiling	Near ceiling
Pull stations (fire alarm)	44"	44"
Volume controls, call-in switches, door bell buttons	44"	44"
Horn/strobes (fire alarm)	80"	80"
(1) Locate device to align with projects' established coursing.		

1.05 FIRE ALARM SYSTEM

A. Fire alarm systems shall be of addressable type, incorporating activation devices such as pull stations, smoke detectors, flow switches, duct detectors**,** etc., and audio visual devices such as horns and strobes.

B. System shall comply with the local building code, Ohio Building Code, National Fire Protection Association, and the Americans with Disabilities Act.

C. Main control panel shall be located in the administrative area with remote annunciator stations at main entries, conforming to local jurisdiction requirements.

D. Strobe devices shall have their candela light intensity discharge conforming to the Americans with Disabilities Act and local codes.

E. Visual devices shall be located in spaces occupied by students, instructors, and the public. Audible devices shall be located so device delivers sounds levels that are 15 dB over ambient noise levels in areas occupied by students, instructors, or public to conform to Ohio Building Code.

F. System shall be connected electronically by a digital communicator to an independent monitoring agency or company that is not located on building site premises.

G. A manual pull station shall be provided in food service areas, at each exterior door used as means of egress, and at other locations conforming to Ohio Building Code, National Fire Protection Association, and other local codes.

H. Provide a two-way communication system in spaces designated by the Design Professional as “area for a rescue”. Communication system shall conform to the Americans with Disabilities Act.

I. Provide audible alarm devices in high ambient noise areas such as technology production labs, vocal rooms, and instrumental rooms.

J. Protect fire alarm devices located in gymnasiums, auxiliary gymnasiums, and locker rooms with wire guards.

K. ***Provide voice-alarm type fire alarm systems per authority having jurisdiction.***

1.06 LIGHTNING PROTECTION

A. Within the base building electrical system cost, the Electrical Design Professional has the option of including an Underwriter’s Laboratory (UL) listed and certified lightning protection system.

1.07 ENERGY USAGE

A. All systems shall be designed in compliance with the current ASHRAE Standard 90.1 “Energy Standard for Building Except Low-Rise Residential Buildings”, and the energy usage requirements prescribed by the Ohio Building Code and the Department of Energy.

1.08 SECURITY SYSTEMS

A. Within the base building electrical system cost, provide the following basic security system conduits.

B. Provide conduit rough-in system only for keypad locations, motion sensors, door contacts, and control panel. Route all door contact conduits to an accessible ceiling area. Coordinate conduit routing and quantities with the Security Technology Designer.

1. Access control provisions for at least three (3) doors (main entrance, staff entrance, maintenance entrance) to include conduit at latch or hinge side, exterior wall box for card reader, interior wall box for keypad.

C. A minimum conduit rough-in system design shall include door contact switches at exterior doors and motion detectors distributed throughout corridors, administrative areas, and in rooms on an outside wall.

1. Conduits at head of door for door position switch

2. Conduits at the head of all exterior doors for door position switches

3. Conduits at latch/hinge side of door for electronic door hardware

4. 120V power at door for electronic door hardware

5. Wall boxes with conduit for key pad entry stations

6. Interior and exterior wall boxes with conduit for proximity device readers.

D. Motion Detectors conduit rough-ins shall be provided on all floors.

1. Interior and exterior wall boxes with conduit for wall mounted motion detectors.

E. Provide external junction box for Security camera mounting on Building. Coordinate Locations with Security Technology Designer. Stub ¾ in. conduit from junction box to the associated Telecommunications Cable Tray.

1. Interior and exterior wall boxes with conduit for wall mounted cameras

1.09 TECHNOLOGY

A. Within the base building electrical system cost, provide the following basic Technology rough-ins. Coordinate the placement of all Technology Conduits, boxes and outlets with the Technology Design Professional.

B. Provide Telecommunications cable tray above corridor ceilings of academic wings.

1. Provide 24” x 3” or 18” x 6”, wire basket-style raceway in main corridors.

2. Provide 18”x3” or 12”x6”, basket-style raceway in secondary corridors.

3. Cable tray shall connect between all intermediate closets Telecommunication Rooms (TRs) and the Main Equipment Room (ER).

4. Provide a continuous path from all Telecommunications Rooms (TRs) back to Main Equipment Room (ER) using 4-inch Conduits, cable trays or a combination of both, as required by conditions.

5. Provide continuous bonding conductor (minimum #6 AWG), in accordance with NEC-250 and TIA/EIA-607, in all cable trays and bond to associated Telecommunications Grounding Busbar (TGB).

6. J-Hooks and similar support mechanisms are not to be used for main and secondary corridors.

C. Junction boxes used for data/voice/video outlets shall be 2-gang, 3 1/2" deep boxes and equipped with a minimum of a 1" conduit, home run to the associated Telecommunications Cable Tray, except where noted by the Telecommunications Design Professional.

D. Telecommunications Rooms (TRs) shall be provided with a minimum of two (2) 120-volt, 30 Amp circuits for powering rack mounted UPS Units. Quantity and location of circuits will depend upon requirements of Technology Design professional. If the building has a standby Generator, these circuits shall be attached to the standby power. General use receptacles, as well as double duplex receptacles shall be provided next to computer/video technologies ports.

E. Provide a minimum of two four (4) in. Riser conduits between floors for Telecommunications cables. Coordinate location and quantities with Technology Cabling System Designer.

F. Provide a continuous cable-tray route into the main Equipment Rooms (ER) and associated Telecommunications Rooms (TRs). Transition the Cable Tray to the Overhead rack cable support system in each of these rooms. As an option, provide 4-inch conduits, in lieu of cable tray thru ER and TR walls. In either case, ensure a continuous cable support system to Equipment racks and cabinets.

G. Fire-stop all penetrations.

H. Classroom Projector Hi-Lo Station

1. Provide one (1), 2-gang, 3-1/2" deep box for the Classroom Instructor's LO station and one (1) quad power outlet at 18" AFF. In addition, provide one (1), 1-gang, 3- ½" deep box at 18" AFF for the instructor's technology outlet. Place the Instructor's LO station and technology outlet boxes side by side.

2. Provide one (1), home run, 1-1/4" conduit from LO station 2-gang box to associated Projector HI Station pull-box. Provide one (1), home run, 1" conduit from LO station 1-gang box to associated Projector HI Station pull-box. Place a 12 x 18 x 6 inch Projector pull-box, with screw attached cover above Projector Ceiling plate for stowage of A/V cables.

3. Place a 1 in. bushing in side of Projector pull-box for routing of classroom speakers and IR sensor cable to Instructor LO station.

4. Provide two (2) 3/4" in. flexible conduits from Projector Pull-box to A/V outlet boxes located on Projector Ceiling Mounting Plate.

5. Provide one duplex electrical outlet located in electrical box on Projector Ceiling Mounting Plate. ***Provide circuit from the local computer panel that is equipped with TVSS.***

6. Provide one (1), home run, 1 in. conduit from Projector pull-box to the associated Telecommunications Cable Tray.

7. For Overhead Mounted Projector, provide one (1) Ceiling Tile Projector Mounting Plate with associated electrical outlet knockout and two (2), 1-gang, 3-1/2" deep boxes for Technology use (projector HI station) and a 1-gang, dual power outlet mounted in the Ceiling Tile Projector Mounting Plate for Projector and associated Set Top Box power. Connect Technology Outlet boxes to Project pull-box with flexible ¾ in. conduits as noted above.

I. LCD/TV Hi-Lo Station

1. For small viewing rooms, conference rooms, small non-classroom areas, commons areas, etc., requiring a LCD monitor/TV, provide one (1), 2-gang, 3-1/2" deep box one (1) quad power outlet at 96" in AFF. ***Provide circuit from the local computer panel that is equipped with TVSS.***

2. Provide one (1), 2-gang, 3-1/2" deep box for the LCD monitor/TV LO station and one (1) quad power outlet at 18" AFF. Place the LCD monitor/TV LO station and technology outlet boxes side by side.

3. Provide one (1), 2-gang, 3-1/2" deep box for the LCD monitor/TV HI station at 96" in AFF

4. Provide one (1), home run, 1-1/4" conduit from LCD monitor/TV LO station to associated LCD monitor/TV HI Station. Provide one (1), home run, 1" conduit from HI station to the associated Telecommunications Cable Tray.

J. Computer Labs

1. Provide a minimum 4-3/4 inch high center divided surface applied metal raceway in computer labs where equipment is located on perimeter of room.

2. Provide fire-rated poke-thrus for feeding computer furniture/desks in computer labs. Provide separate poke-thrus for electrical outlets and technology outlets.

3. Extend Technology poke-thru to the associated Telecommunications Cable Tray.

K. Computer Stations

1. Provide one (1) 1" conduit for each computer workstation/work area outlet location and extend the conduit to the associated Telecommunications cable tray.

L. Classroom Phones

1. Provide one (1) 1-gang, 3-½" deep box at 48" AFF on wall by Instructor Location or by Classroom Door (Designer to standardize on location District Wide) for Classroom Phone Instrument.

2. Provide one (1), home run, ¾". conduit from the Classroom Phone box to the associated Telecommunications Cable Tray.

M. WALL-MOUNTED PHONES

1. Provide one (1) 1-gang, 3-½" deep box at 48" AFF on wall for wall-mounted Phone Instrument.

2. Provide one (1), home run, ¾". conduit from the Phone box to the associated Telecommunications Cable Tray.

N. MECHANICAL ROOM – BUILDING AUTOMATION

1. Provide one (1) 1-gang, 3-½" deep box at 48" AFF on wall for HVAC and Building Automation Equipment in Mechanical rooms. Coordinate Box location with Building Automation System Designer.

2. Provide one (1), home run, ¾". conduit from the Building Automation System box to the associated Telecommunications Cable Tray.

O. ELEVATOR ROOM – ELEVATOR PHONE

1. Provide one (1) 1-gang, 3-½" deep box at 48" AFF on wall in Elevator Equipment Room for Servicing Elevator Phone Equipment. Coordinate Box location with Elevator System Designer.

2. Provide one (1), home run, ¾". conduit from the Elevator Equipment Room box to the associated Telecommunications Cable Tray.

P. ELECTRICAL AND MECHANICAL ROOM PHONES

1. Provide one (1) 1-gang, 3-½" deep box at 48" AFF on wall in all Electrical and Mechanical Rooms for a Wall-Mounted Telephone. Coordinate final location with Designer.

2. Provide one (1), home run, ¾ in. conduit from the Electrical and Mechanical Room Telephone boxes to the associated Telecommunications Cable Tray

Q. EXTERNAL PAGING HORNS

1. Provide external junction box for Paging Horn mounting on Building. Coordinate Locations with Paging Technology Designer. Stub ¾ in. conduit from junction box to the associated Telecommunications Cable Tray.

R. EXTERNAL WIRELESS ANTENNAS

1. Provide external junction box on Building for External Wireless Antenna Cable Routing. Coordinate Locations with Wireless Technology Designer. Stub 1 in. conduit from junction box to an accessible ceiling area. The associated Wireless Access point must be mounted inside of the building, in an accessible space and within 20-25 feet of the external antenna.

S. A/V CABINETS

1. Provide all wall-mounted, A/V cabinets AND Specialized Audio Cabinets with a quad electrical outlet located inside of associated cabinet.

2. Provide one (1), home run, ¾" conduit from the AV cabinet to the associated Telecommunications Cable Tray.

3. Provide a minimum of one (1), 2" Conduit stubbed from the wall-mounted A/V cabinet to above the ceiling for routing of A/V and Speaker cables. Install bushings on both ends of stub conduit. Coordinate requirements with Technology Designer.

T. SERVICE PROVIDERS

1. Provide a minimum of one (1), 4" conduit for Wide Area Network (WAN) from the Main Telecommunications Equipment Room (ER) to the property line.

2. Provide one (1), 4" conduit for cable television (CATV) from the Main Telecommunications Equipment Room (ER) to the property line.

3. Provide one (1), 4" conduit for the telephone from the Main Telecommunications Equipment Room (ER) to the property line.

4. Concrete encase and re-enforce all underground entrance conduits.

5. Stub all Entrance conduits up at associated Utility Poles.

6. Note that all Entrance conduits may NOT terminate at same Service Provider Pole. Coordinate location with Service Providers.

7. Provide nylon pull-ropes in all Entrance Conduits.

8. When the Entrance Facility is not located in the Main Technology Equipment Room (ER), (Remodels, for example), provide a minimum of two (2), 4" conduits from the Service Provider Entrance (DEMARC) to the Main Telecommunications Equipment Room (ER).

9. Provide outside system plant (OSP) infrastructure to comply with current BICSI COOSP Standards and Practices. Coordinate specific requirements with each Service Provider.

U. LOW VOLTAGE SLEEVES

1. Provide one (1), 2 in. sleeve, with bushings, in all block walls, for telecommunications cables, as required.

2. Note, not all of the Telecommunications cables are run in conduits, for example, paging speaker cables are installed using J –Hooks, etc. and require sleeves to enter all rooms.

1.10 TELECOMMUNICATIONS GROUNDING

A. Within the base building electrical system cost, provide Telecommunications Grounding/Bonding System in accordance with NEC-250 and TIA/EIA-607 using approved Grounding Hardware. CAD Weld Bonding Conductors to Building Steel.

B. Provide Telecommunications Main Grounding Busbar (TMGB) in Main Equipment Room (ER).

1. All TMGB Connections to be made with double-bolted, Compression style, Grounding Lugs.

2. As a minimum, Bond TMGB to following:

a. Building Steel (minimum #2 AWG insulated copper bonding conductor).

b. Main Electrical Service Ground (minimum #2 AWG insulated copper bonding conductor).

c. Local Service Panel Ground (minimum #6 AWG insulated copper bonding conductor).

d. Telecommunications Bonding Backbone (TBB) that connects TMGB to other TGBs (minimum #2 AWG insulated copper bonding conductor).

e. Associated Telecommunications Cable Tray(s) (minimum #6 AWG insulated copper bonding conductor).

f. Telecommunications Conduit(s) Entering ER (minimum #6 AWG insulated copper bonding conductor).

C. Provide Telecommunications Grounding Busbar (TGB) in all Telecommunications Rooms (TRs) and AV Equipment Cabinets.

1. All TGB Connections to be made with double-bolted, Compression style, Grounding Lugs.

2. As a minimum, Bond TGB to following:

a. Building Steel (minimum #2 AWG insulated copper bonding conductor).

b. Local Service Panel Ground (minimum #6 AWG insulated copper bonding conductor).

c. Telecommunications Bonding Backbone (TBB) that connects TGB to other TGBs and TMGB (minimum #2 AWG insulated copper bonding conductor).

d. Associated Telecommunications Cable Tray(s) (minimum #6 AWG insulated copper bonding conductor).

e. Telecommunications Conduit(s) Entering TR (minimum #6 AWG insulated copper bonding conductor).

f. Provide Telecommunications Bonding Backbone (TBB) between all TGBs and the TMGB.

g. The TBB shall be a minimum of #2 AWG insulated copper bonding conductor. See sizing chart in associated specification section.

h. All TBB Connections to be made with double-bolted, Compression style, Grounding Lugs.

D. As a minimum, the Technology Contractor shall bond the following devices to the associated TMGB and TGBs using a minimum #6 AWG insulated copper bonding conductor using compression style lugs:

1. PABX Equipment

2. Equipment Racks and Cabinets

3. TR Cable Ladder and Tray

4. CATV Equipment

5. Lightning and Surge Protectors

6. Telecommunications Devices

7. Coupled Bonding Conductors (CBCs)

8. Backbone Cable Shields

9. Telecommunication and Fiber Cable Shields

10. Antenna Cable Shields

11. Raised Floors

12. Antenna Masts

END OF SECTION

PURPOSE

The purpose of this chapter is to provide a design standard and a level of quality for the systems and materials to be incorporated into new buildings for the Career-Technical Facilities Assistance Program which are not addressed within the Design Manual.

SYSTEMS

Only those major building systems which differ from or are in addition to those stated within the original Design Manual will be listed in this chapter.

In this Career-Technical Section to the Design Manual, no attempt has been made to recommend or describe the means and methods of assembling the various systems.

MATERIALS

With purpose, the materials mentioned in this chapter are generic. No brand or manufacturer's names are stated. Materials other than those mentioned in this chapter, which meet or exceed the characteristics or performance of the stated materials, will be considered, provided adequate information is submitted for approval by the Design Professional and the Ohio School Facilities Commission. Alternate materials which exceed the cost of materials indicated in the Career-Technical Section of Opinion of Probable Cost in Chapter 1 will be at the school district's cost.

DESIGN CODES AND STANDARDS

It is recommended that all school spaces used primarily by children shall be designed in accordance with the proposed new ADA regulations for children ages 3 through 12. Areas used primarily by students 13 and over and by adults are to be designed in accordance with current ADA regulations. All buildings should adhere to all current codes and standards. Efforts in design should be made to reduce energy consumption to at least 30% below international energy conservation code 2000.

DESIGN FOR SAFETY / SECURITY

Design Professionals and educators are encouraged to embrace the concept known as Crime Prevention Through Environmental Design (CPTED). CPTED encourages planners to include safety elements into a building design at the earliest stages. Examples are administration control at main entrances, avoiding corridors with too many hidden spots, and fewer entrances.

ENERGY USAGE

All systems shall be designed in compliance with ASHRAE STANDARD 90.1 “Energy Standard for Building Except Low-Rise Residential Buildings”, and the energy usage requirements prescribed by the Ohio Building Code and the Department of Energy.

THIS PAGE HAS BEEN INTENTIONALLY LEFT BLANK.

A. APPLICATION

1. Used at high bay labs only (Programs 5-7).

2. Locate 8'-0" above finished floor and higher.
   Provide masonry below metal panels.

B. COMPONENTS

1. Exterior Finish
   a. 24 gauge stucco embossed G-90 galvanized steel with high performance finish

2. Core
   a. Foamed in-place urethane insulation.

3. Interior Finish
   a. 24 gauge white stucco embossed G-90 galvanized steel.

C. PERFORMANCE

1. Features
   a. Impact resistant
   b. Moisture resistant
   c. Thermal resistant

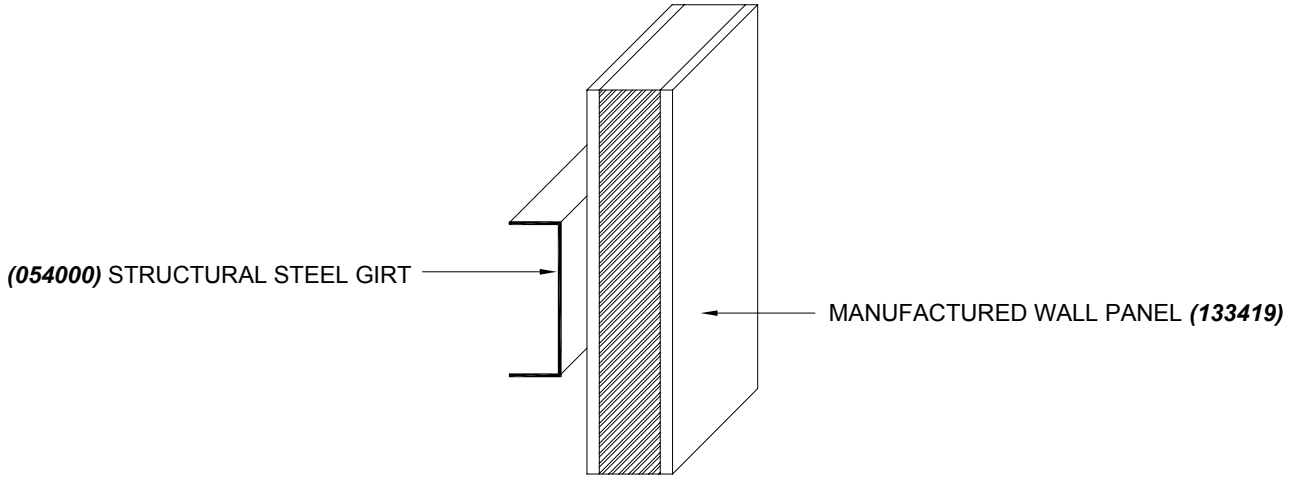

Manufactured Wall Panel
Figure A-1

THIS PAGE HAS BEEN INTENTIONALLY LEFT BLANK.

METAL ROOF WITH BATT INSULATION

A. APPLICATION

1. Steep Roofing

B. COMPONENTS

1. Roof Membrane
   a. Metal roof
2. Roof Insulation
   a. Batt/blanket insulation
3. Vapor Retarder
   a. Where required. Refer to Chapter 9.
4. Structural Support
   a. Roof purlins
5. Slope
   a. Minimum .25:12

C. PERFORMANCE

1. Features
   a. Impact resistant
   b. Moisture resistant
   c. Thermal resistant

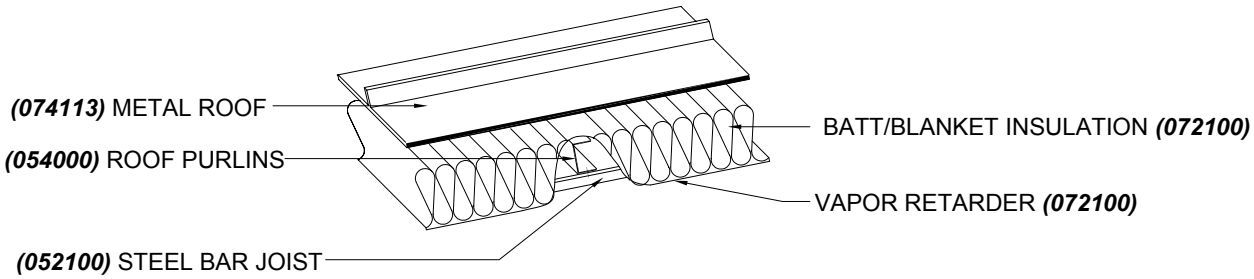

Metal Roof with Batt Insulation
Figure A-1

THIS PAGE HAS BEEN INTENTIONALLY LEFT BLANK.

1.07 PLUMBING FIXTURES/PLUMBING SPECIALTIES (Add the following)

L. Floor drains shall be installed in each large group restroom, locker room, mechanical room, kitchen area, and high - bay labs. Provide a sediment bucket in the floor drain if conditions exist where solids may enter the drain. Provide ***an exterior*** oil interceptor at drains if conditions exist where oil, gasoline, etc. may enter the drain.

P. Install a cold water hose bibb in each large group restroom, locker room and mechanical room. The hose bibb shall be ***recessed*** behind a lockable door in restrooms and locker rooms, with access by a removable key handle. All high - bay labs shall receive keyed hose bibbs.

W. Provide trench drains on interior side of all overhead doors located within high - bay labs. Provide a sediment bucket in the drain if conditions exist where solids may enter the drain. Provide ***an exterior*** oil interceptor at drains if conditions exist where oil, gasoline, etc. may enter the drain.

THIS PAGE HAS BEEN INTENTIONALLY LEFT BLANK

SECTION 1.05: AIR FLOW RATES FOR BUILDING SPACES (Add the following)

	SPACE	SUPPLY AIR	EXHAUST AIR
14.	Professional Labs (Program Types 1-4)	6 air changes/hour	N/A
15.	High Bay Labs (Program Types 5-7)	6 air changes/hour	0.5 cfm/SF

* See program summaries in Chapter 6 for additional HVAC requirements.

THIS PAGE HAS BEEN INTENTIONALLY LEFT BLANK

1.02 LIGHTING (Add the following)

B. High volume space such as student dining, high - bay labs, etc. shall be illuminated with high-efficiency, high-intensity discharge lamp type light fixtures. Quartz restrike options shall be incorporated into some fixtures to provide an average of 2 footcandles of illumination during the cool-down/warm-up (restrike) period caused by momentary electrical outages.

SCHOOL LIGHTING LEVELS (add the following)

Room Type Classification	1993 IES	Recommended Minimum Footcandles
Professional Labs (program types 1-4)	-	***50***
High Bay Labs (program types 5-7)	-	60