PURPOSE

The purpose of this chapter is to provide a design standard and a level of quality for the systems and materials to be incorporated into new buildings for the State School Building Assistance Program.

SYSTEMS

Major building systems such as structural, roof, exterior wall, plumbing, HVAC, electrical, and technology are described. The stated features, components, performance, and end results are required. These are the standards required for new facilities. Systems, other than those referred to in this chapter, will be considered if adequate information, data, calculations, demonstrations, and relative cost information are provided to the Design Professional and subsequently approved by the Ohio Facilities Construction Commission.

In this Design Manual, no attempt has been made to recommend or describe the means and methods of assembling the various systems.

MATERIALS

With purpose, the materials mentioned in this chapter are generic. No brand or manufacturer's names are stated. Materials other than those mentioned in this chapter, which meet or exceed the characteristics or performance of the stated materials, will be considered, provided adequate information is submitted for approval by the Design Professional and the Ohio Facilities Construction Commission. Alternate materials which exceed the cost of materials indicated in the Design Manual will be at the school district's cost.

DESIGN CODES AND STANDARDS

It is recommended that all school spaces used primarily by children should be designed in accordance with the new, proposed ADA regulations for children ages 3 through 12. Areas used primarily by students 13 and over and by adults are to be designed in accordance with current ADA regulations. All buildings should adhere to all current codes and standards. Efforts in design should be made to reduce energy consumption to at least 30% below ***ASHRAE 90.1-2007 per appendix G.***

DESIGN FOR SAFETY / SECURITY

Design Professionals and educators are encouraged to embrace the concept known as Crime Prevention Through Environmental Design (CPTED). CPTED encourages planners to include safety elements into a building design at the earliest stages. Examples are administration control at main entrances, avoiding corridors with too many hidden spots, and fewer entrances.

ENERGY USAGE

All systems shall be designed in compliance with ASHRAE STANDARD 90.1 “Energy Standard for Building Except Low-Rise Residential Buildings”, and the energy usage requirements prescribed by the Ohio Building Code and the Department of Energy.

AIR BARRIER SYSTEM

An air barrier system is a collection of special materials applied to the walls and roof of a building to control air movement through the building envelope. To be effective all joints between different materials, cracks, penetrations, etc., must be sealed with airtight and flexible membranes.

Air barrier materials include self-adhering sheets, fluid-applied membranes, spray-applied polyurethane foams, and rigid air barrier materials.

The Commonwealth of Massachusetts was the first state to require air barriers and at least six other states are considering it also. (Refer to Specification Section 072700). There is near consensus that in most all climates, properly installed air barrier assemblies can substantially reduce operating energy costs. Design Professionals are required to incorporate a continuous air barrier system into their projects.

TECHNOLOGY COORDINATION

Design Professional shall coordinate closely with the Technology Designer for an integrated classroom design, to assure all classroom technology systems are accommodated properly in conjunction with architectural designs, such as daylighting. (i.e. proper location for projector, adequate casework for AV equipment, etc.)

The School District's Educational Technology Plan has a direct impact on space planning of technology support rooms. Verify and coordinate Equipment Room (ER) and Telecommunications Room (TR) sizes and locations with the Technology Designer during the programming phase.

Design Professional shall coordinate locations of video display viewing surfaces and methods to control room daylighting with the Technology Designer to achieve a minimum 10:1 contrast ratio.

The Technology Designer shall coordinate with other Design Professionals to provide adequate, dedicated rooftop space to accommodate current or future system antennas.

A. APPLICATION

1. No limitation as to location

B. COMPONENTS

1. Exterior Finish
   a. Masonry veneer

2. ***2"*** Air Cavity – Required
   a. Weeps top and bottom

3. Cavity Insulation
   a. Rigid insulation or closed cell polyurethane insulation

4. Air Barrier System (Required) Options include:
   a. Self-adhering sheets
   b. Fluid-applied membranes
   c. Closed-cell polyurethane insulation
   d. Foil faced rigid insulation board
   (air barrier transition tape required at masonry control joints)

5. Backup Material
   a. Concrete masonry unit

C. PERFORMANCE

1. Detail roof/wall intersections ***and all openings and penetrations*** to provide a continuous air barrier system.

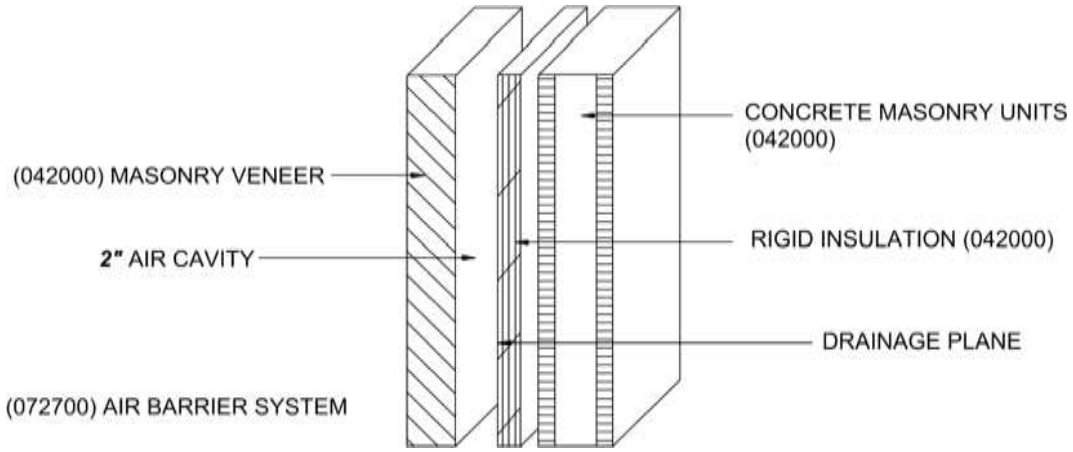

Masonry Cavity Wall
Figure A-1

METAL PANEL ON CONCRETE MASONRY WALL

A. APPLICATION

1. Use of this system shall not exceed 20% of total building exterior vertical wall surface.

B. COMPONENTS

1. Exterior Finish
   a. Metal Panel
2. Rigid insulation
3. Metal Framing/Furring
4. Backup Material
   a. Concrete masonry unit
5. Air Barrier System
   (air barrier transition tape required)

C. PERFORMANCE

1. Detail roof/wall intersection ***and all openings and penetrations*** to provide a continuous air barrier system.

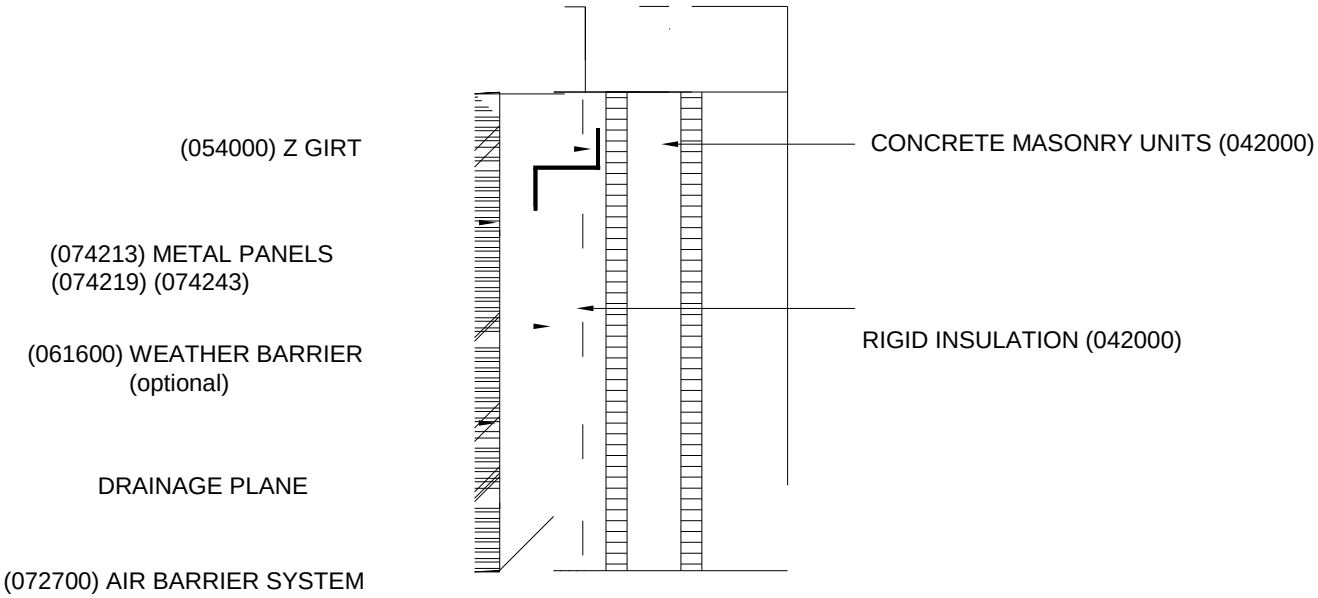

Metal Panel on Concrete Masonry Wall
Figure A-1

EXTERIOR WALLS
PLANT-PRECAST CONCRETE
INSULATED SANDWICH WALL

A. APPLICATION

1. Excellent for impact resistance
2. Excellent where large, load-bearing capacities are required

B. COMPONENTS

1. Exterior Finish
   a. Architectural Concrete
2. Cavity Insulation
   a. Rigid Insulation
3. Backup Material
   a. Structural Concrete
4. ***Air Barrier System***

C. PERFORMANCE

1. ***Detail roof/wall intersection and all openings and penetrations to provide a continuous air barrier system.***

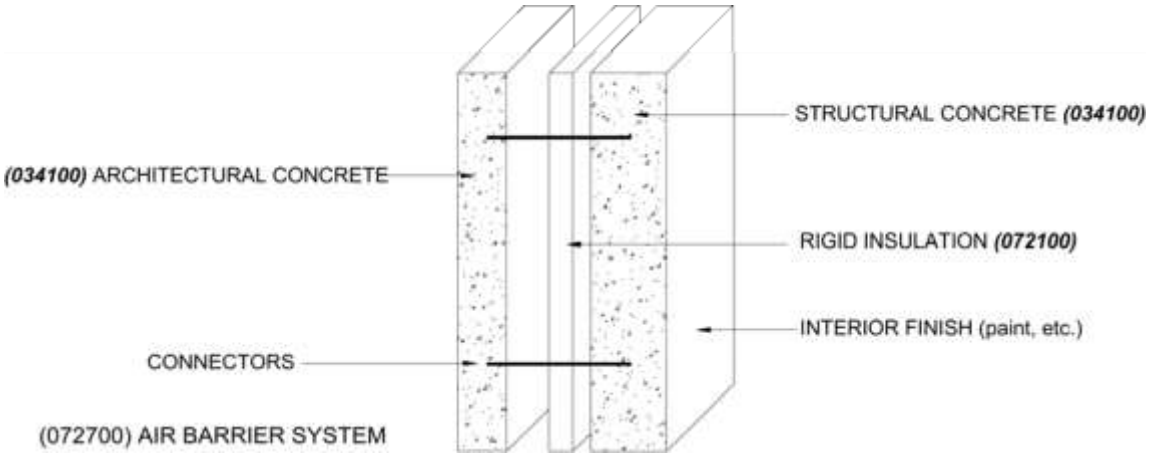

Plant-Precast Concrete Insulated Sandwich Wall
Figure A-1

A. APPLICATION

1. Permitted in spaces, such as mechanical penthouses and other locations where heavy structural loading is not practical.

2. Use of this system shall not exceed 10% of the total building exterior vertical wall surface.

B. COMPONENTS

1. Exterior Finish
a. Metal Wall Panel

2. ***Rigid -Foam Sheathing***

3. ***Air Barrier System***

4. Backup Material
a. Cold-formed metal framing

C. PERFORMANCE

1. Detail roof/wall intersection ***and all openings and penetrations*** to provide a continuous air barrier system.

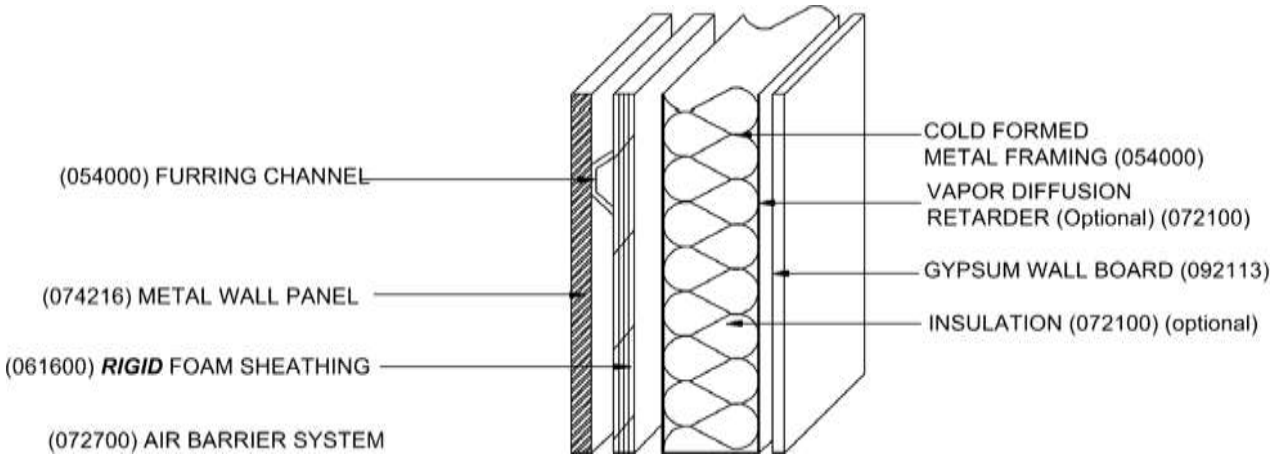

Metal Panel On Metal Framing
Figure A-1

EXTERIOR WALL/ROOF CLOSURE

A. APPLICATION

1. All wall to roof conditions

B. COMPONENTS

1. Roof and Wall Systems – selected by Design Professional
2. Structural System – selected by Design Professional
3. Sprayed-On Insulation
4. Thermal Barrier ***if required by insulation***
5. ***Air Barrier System***

C. PERFORMANCE

1. ***Foam seal all roof/wall intersections (low wall, high wall, rake wall) and all openings and penetrations, ridges and valleys to provide a continuous air barrier. Provides a continuous seal against infiltration.***

Provide continuous air barrier system to seal juncture of walls and roofs

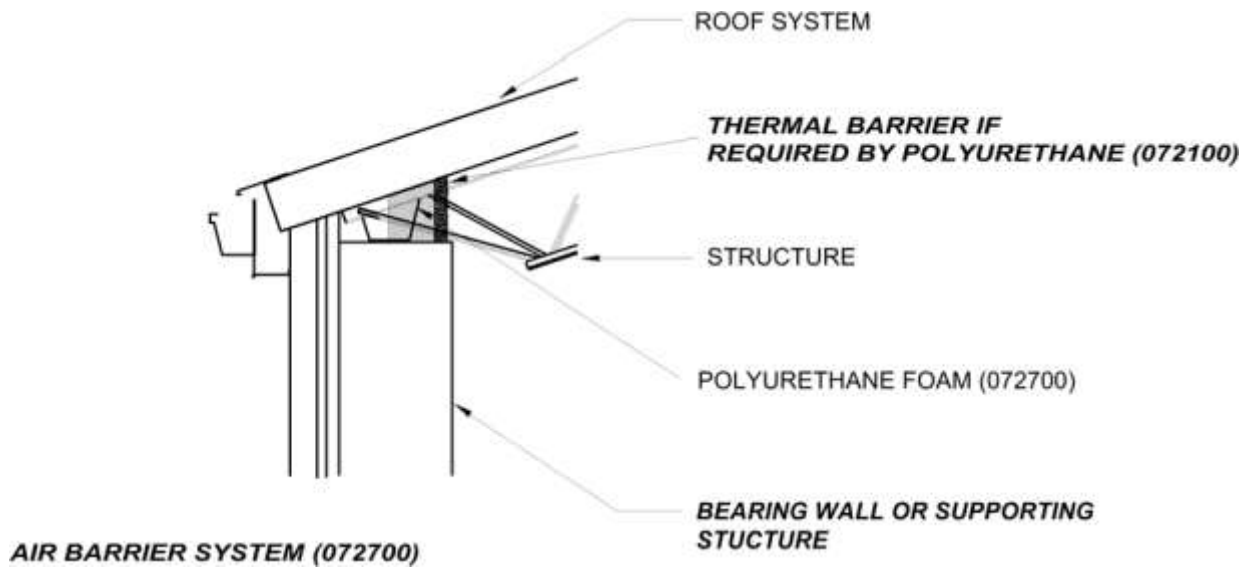

Recommended Exterior Wall/Roof Closure
Figure A-1

THIS PAGE HAS BEEN LEFT INTENTIONALLY BLANK.

A. APPLICATION

1. Steep Roofing
2. Slope - Minimum 4:12
3. Hip roofs require special consideration

B. COMPONENTS

1. Roof Membrane
   a. Shingles
   b. Underlayment
   c. Nailable sheathing

2. Roof Insulation
   a. (Vented) nailboard/insulation (2" minimum air space)
   b. Rigid insulation

3. Vapor Retarder
   a. Where required. Refer to Chapter 9.

4. Structural Support
   a. Steel deck or cementitious deck

5. Air Barrier System Required

C. PERFORMANCE

1. Features
   a. Detail roof/wall and roof plane intersection and all openings and penetrations to provide a continuous air barrier system.
   b. Refer to NRCA Roofing Manual: Chapter 3, "Condensation Control & Ventilation for Steep-Slope Roof Assemblies"

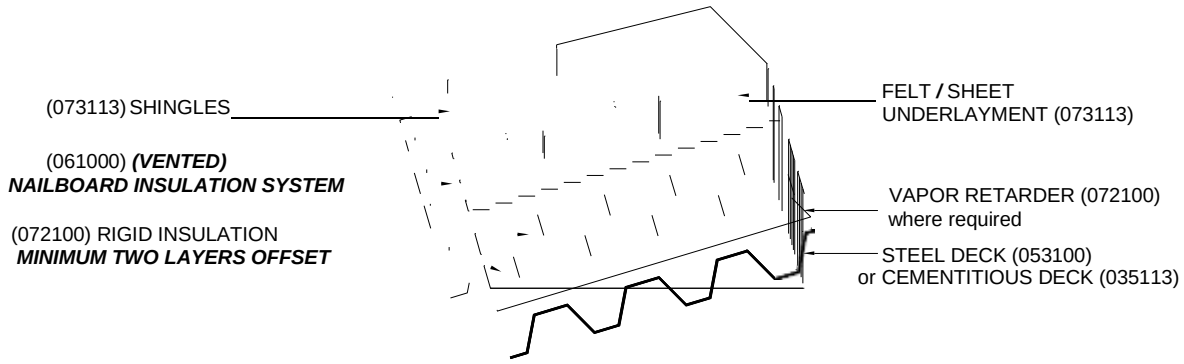

Shingle Roof System
Figure A-1

A. APPLICATION

1. Steep Roofing

2. Slope – Minimum 3:12
   2:12 will be considered for uncomplicated roofs

B. COMPONENTS

1. Roof Membrane
   a. Metal roof

2. Roof Insulation
   a. Rigid insulation

3. Vapor Retarder
   a. Where required. Refer to Chapter 9.

4. Thermal Barrier
   a. Where required. Refer to Chapter 9.

5. Structural Support
   a. Steel roof deck or cementitious deck

6. Air Barrier System Required

C. PERFORMANCE

1. Features
   a. Detail roof/wall intersections and all openings and penetrations to provide a continuous air barrier system.

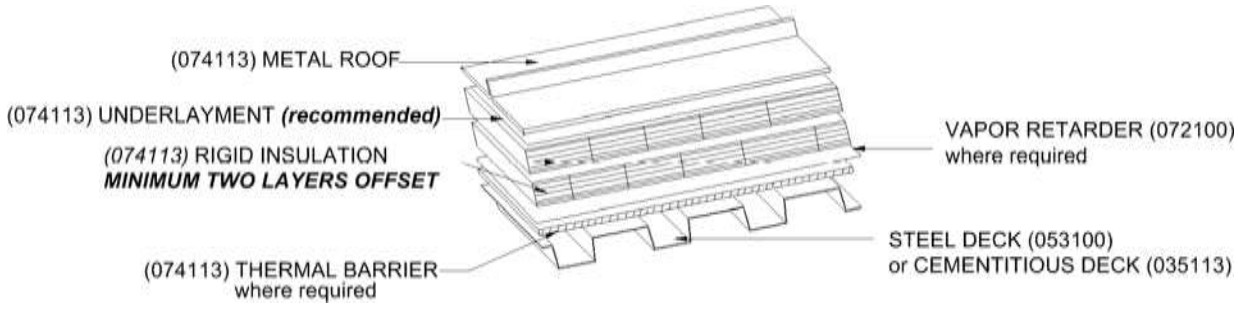

Metal Roof with Rigid Insulation
Figure A-1

A. APPLICATION

1. All low sloped roof areas

2. Slope – Minimum 0.25:12

B. COMPONENTS

1. Roof Membrane
   a. Built-up/polymer modified bitumen

2. Recovery Board ***– if required***

3. Roof Insulation
   a. Rigid insulation

4. Vapor Retarder
   a. Where required. Refer to Chapter 9.

5. Thermal Barrier
   a. Where required. Refer to Chapter 9.

6. Structural Support
   a. Steel deck or cementitious deck

7. Air Barrier System

C. PERFORMANCE

1. Features
   a Detail roof/wall intersections and all penetrations and openings to provide a continuous air barrier system.

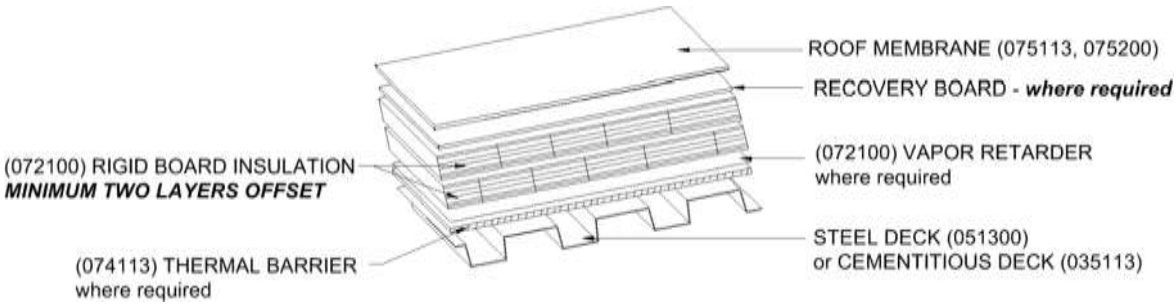

Built-Up Roof
Figure A-1

ROOFS
MEMBRANE ROOF

A. APPLICATION

1. All low sloped roof areas
2. Slope – Minimum 0.25:12

B. COMPONENTS

1. Roof Membrane
   a. Thermoplastic/thermoset
2. Recovery Board/Slip Sheet
   a. Where required. Refer to Chapter 9.
3. Roof Insulation
   a. Rigid insulation
4. Vapor Retarder
   a. Where required. Refer to Chapter 9.
5. Thermal Barrier
   a. Where required. Refer to Chapter 9.
6. Structural Support
   a. Steel deck or cementitious deck
7. Air Barrier System Required

C. PERFORMANCE

1. Features
   a. ***Detail roof/wall intersections and all openings and penetrations to provide a continuous air barrier system***.

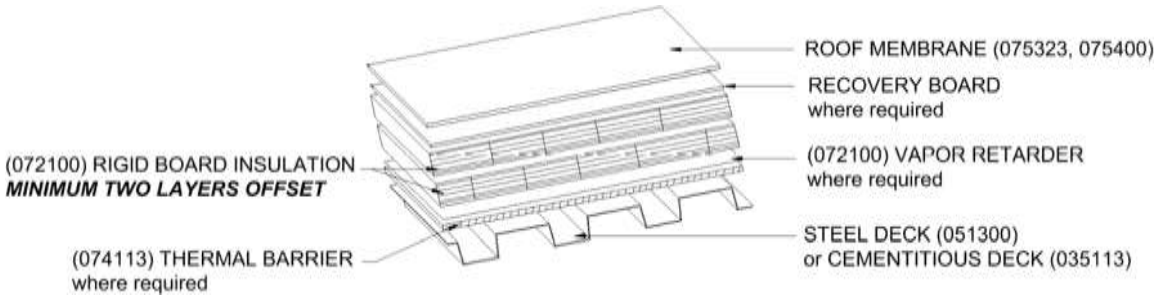

Membrane Roof
Figure A-1

A. APPLICATION

1. All sloped roof ridge conditions.

B. COMPONENTS

1. Roof System - Selected by Design Professional
2. Structural System – Selected by Design Professional
3. Air Barrier System Required

C. PERFORMANCE

1. Detail all roof plane intersections and all openings and penetrations to provide a continuous air barrier system.

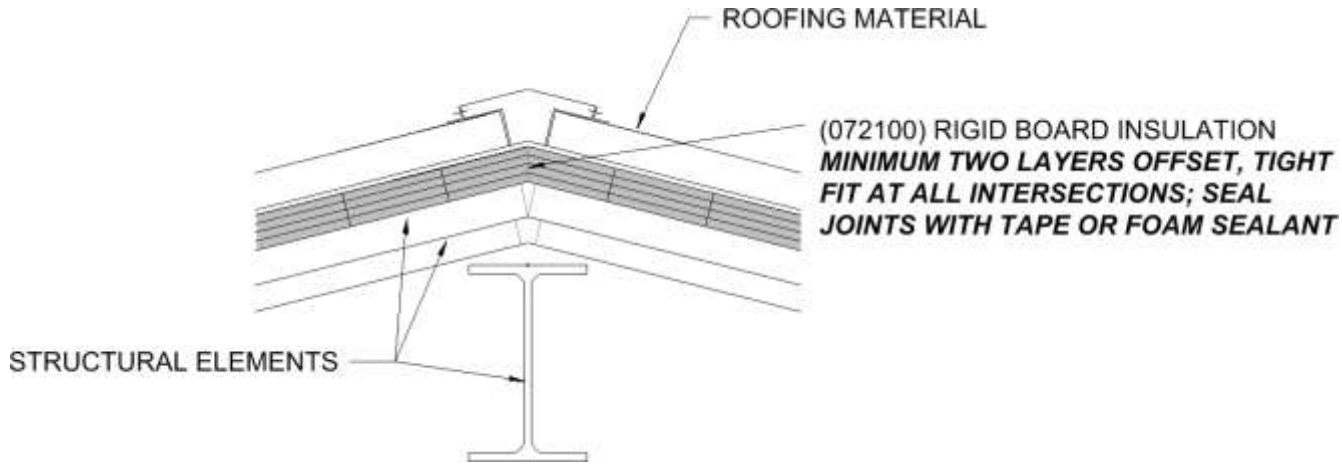

NOTE: Provide continuous air barrier system in roof system.

Recommended Roof Ridge
Figure A-1

EXTERIOR WALL SYSTEM

A. APPLICATION

1. All conditions where cost effective.

B. COMPONENTS

1. Expanded Polysytrene (bead board)
2. Non-Metallic Web-Ties
3. Reinforcing – Selected by Design Professional
4. Varying Widths of Concrete Wall
5. Optional Finishes for Interior and Exterior Faces

C. PERFORMANCE

1. Good insulating and acoustical performance.
2. Ease of installation.
3. Qualifies for LEED credits.

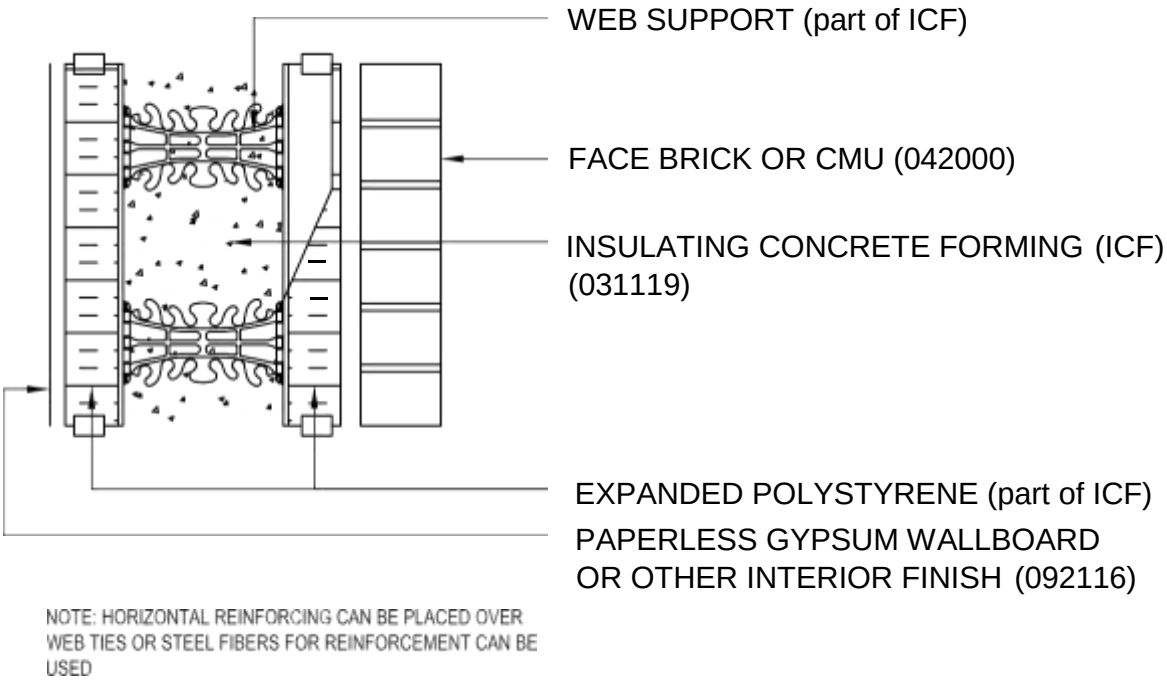

NOTE: HORIZONTAL REINFORCING CAN BE PLACED OVER WEB TIES OR STEEL FIBERS FOR REINFORCEMENT CAN BE USED

Insulating Concrete Forming (ICF)
Figure A-1

A. APPLICATION

1. Low Roof to Vertical Masonry Wall

B. COMPONENTS

1. Roof and Wall Systems - Selected by Design Professional
2. Metal Flashings and Counter Flashings – Selected by Masonry (Sub)Contractor
3. Vertical leg of metal flashing at inside of masonry wall could be anchored with termination bar
4. Air Barrier System Required
   a. Self-adhering sheets
   b. Close-cell polyurethane spray foam

C. PERFORMANCE

1. Prevent water from entering cavity and into interior space.
2. Provides path for water in cavity to exit to exterior.
3. Detail roof/wall intersections to provide a continuous air barrier system.

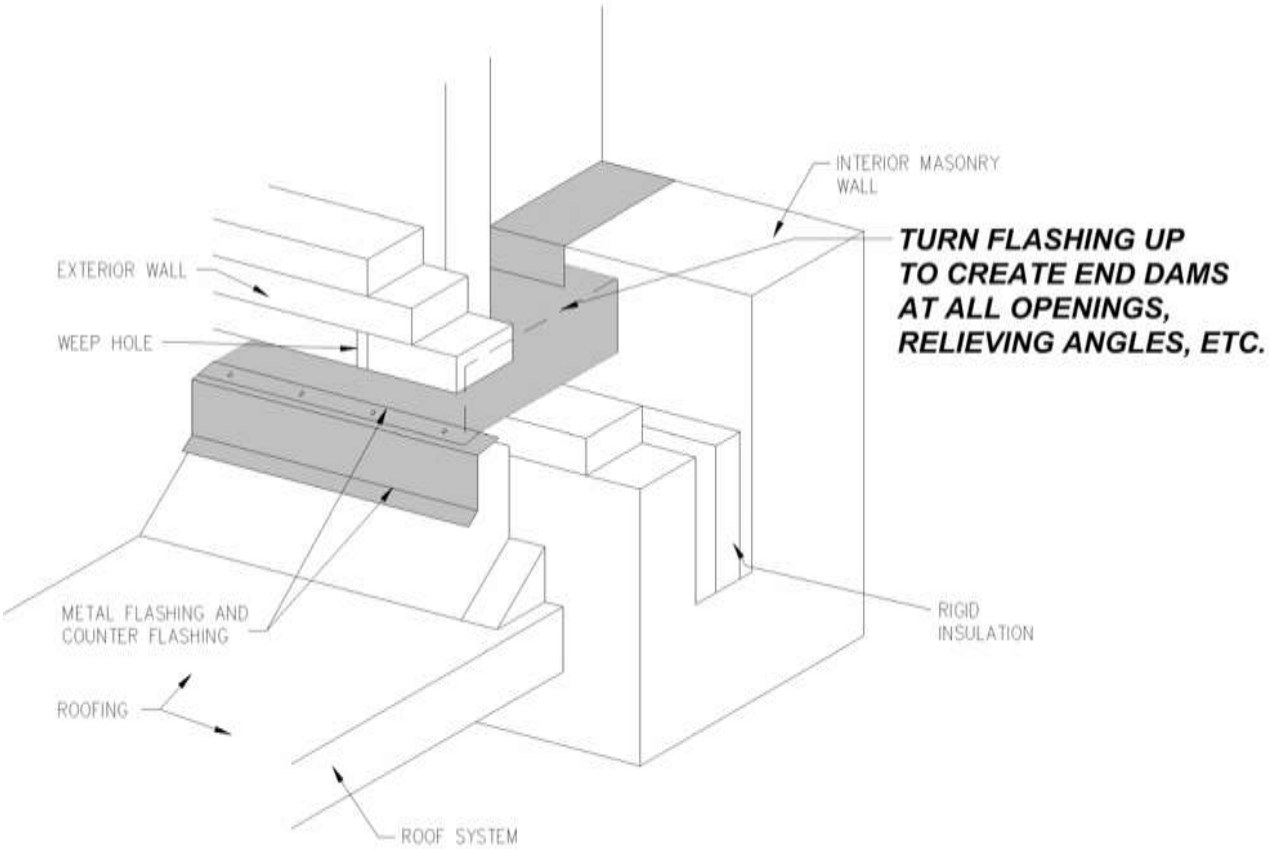

Recommended Wall-Low Roof
Figure A-1

Note: Provide continuous air barrier system to seal juncture of roof and wall.

THIS PAGE HAS BEEN INTENTIONALLY LEFT BLANK.

INTERIOR WALLS

STEEL STUD AND WALLBOARD

A. APPLICATION

1. ***Do not use at physical education spaces, large group restrooms, receiving/loading areas, mechanical room, music room and kitchen***.
2. ***Extend to deck and seal perimeter.***

B. COMPONENTS

1. Screw attached to studs ***or resilient channels.***
2. Fire resistance rating
3. ***Acoustic rating***
4. ***Level 4 finish***

C. PERFORMANCE

1. ***System shall provide abuse resistance and acoustic separation.***
2. ***Seal all openings and penetrations.***

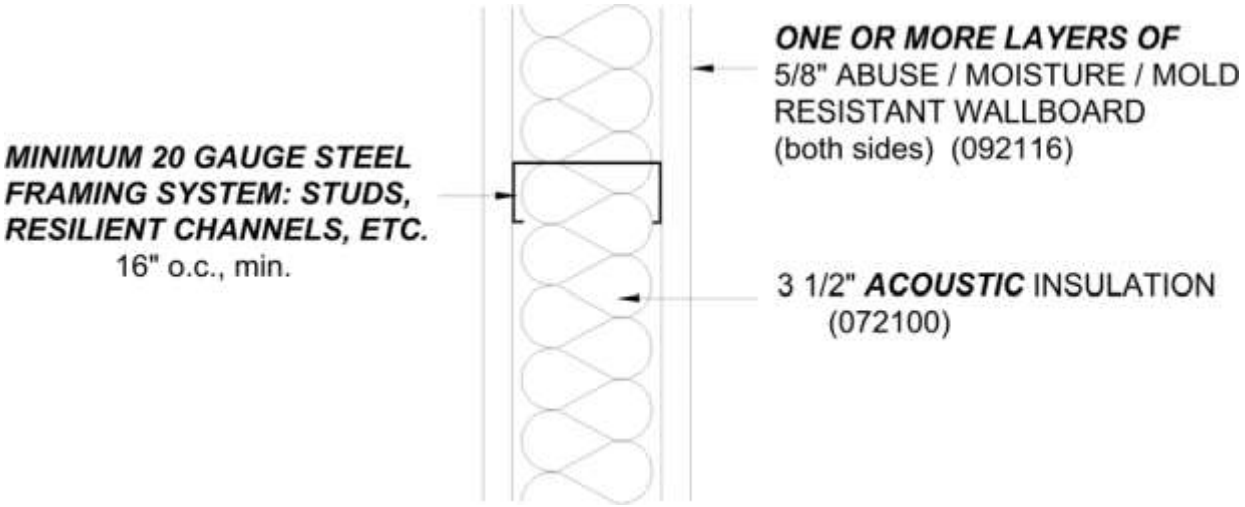

Steel Stud and Wallboard
Figure A-1

THIS PAGE HAS BEEN INTENTIONALLY LEFT BLANK.

1.01 GENERAL

A. The Structural Design Professional shall be responsible for the adequacy, economy, and serviceability of all structures for which he/she is assigned design responsibility. Good engineering judgment shall be used in addition to compliance with all national, local, and applicable codes.

B. School building structures and exterior enclosures shall be designed and constructed of materials which will perform satisfactorily for 40 years, with only minor maintenance and repairs, and for 100 years before major repairs or replacement of primary structural or exterior enclosure elements is required.

C. School buildings shall provide a safe, secure shelter for students, faculty, and staff, generally capable of resisting forces from wind, earthquake, airborne debris, and man-made elements.

D. Structural and building enclosure systems shall be selected on the basis of life cycle costs, safety, durability, constructability, availability of materials, and aesthetic considerations.

1.02 FOUNDATION AND RETAINING STRUCTURES

A. Selection of Foundation Types Shall Be Based On:

1. Recommendations of the Geotechnical Engineer

2. Economical comparison of foundation systems when the Geotechnical Engineer offers foundation alternatives.

3. Soil design strengths, criteria, and loads

4. Deep foundations when recommended by the Geotechnical Engineer, and when more economical than shallow foundations

5. Shallow foundations when recommended by the Geotechnical Engineer, and when determined to be more economical than deep foundations

    a. Spread and wall footings
        1) Earth-formed footings shall be considered where cohesive soil is encountered and the sides of the excavation can be cut true and maintained through the concrete placement.
        2) Earth-formed excavations shall be to a tolerance of +6 inches, -0 inches.
        3) Formed footings shall be used in granular soil and where the sides of the excavation cannot be cut true and maintained through the concrete placement.
        4) Minimum concrete compressive strength of 3,000 psi at 28 days
        5) Minimum reinforcing according to American Concrete Institute 318

1.02 FOUNDATION AND RETAINING STRUCTURES (cont'd)

b. Trenched footings shall be considered where:
   1) Recommended by the Geotechnical Engineer
   2) Cohesive soil is encountered
   3) Sides of the excavation can be cut true and maintained through the concrete placement
   4) The footing can be combined with the foundation wall in one structural element
   5) Minimum concrete compressive strength of 3,000 psi at 28 days
   6) Minimum reinforcing according to American Concrete Institute 318
   7) Excavation shall be to a tolerance of +6 inches, -0 inches.

c. Reinforced concrete foundation walls
   1) Minimum concrete compressive strength of 4,000 psi at 28 days
   2) Minimum reinforcing according to American Concrete Institute 318

d. Reinforced and fully grouted concrete masonry foundation walls
   1) Minimum design flexural strength of 1,500 psi at 28 days
   2) Use normal weight concrete masonry unit (CMU) for buried foundation walls
   3) Grout all concrete masonry unit cores
   4) Minimum reinforcing in accordance with reinforced masonry criteria in American Concrete Institute 530, American Society of Civil Engineers 6, and TMS 402.

e. Other special foundation systems may be used if acceptable to the Geotechnical Engineer and the Structural Design Professional.

B. Retaining Structures

1. Reinforced concrete retaining walls
   a. Minimum concrete compressive strength of 4,000 psi at 28 days if exposed to exterior
   b. Minimum concrete compressive strength of 4,000 psi at 28 days if within a building enclosure
   c. Use 6 percent (+/- 1.5%) air entrainment for exterior concrete
   d. Minimum reinforcing in accordance with American Concrete Institute 318
   e. Minimum concrete cover of reinforcing steel in accordance with American Concrete Institute 318
   f. Space vertical control joints at 25 feet on center or less. Extend horizontal reinforcing through control joints.
   g. Space vertical expansion joints at 75 feet on center or less. Stop horizontal reinforcing at each side of expansion joints and provide a full-height keyway. Install 1 inch thick minimum preformed joint material in expansion joints.

1.02 FOUNDATION AND RETAINING STRUCTURES (cont'd)

2. Reinforced concrete masonry retaining walls
   a. Minimum design flexural strength of 1,500 psi at 28 days
   b. Grout all concrete masonry unit cores below grade
   c. Use 9-gauge W1.7 or 0.148 inch hot dipped galvanized, horizontal joint reinforcing at maximum spacing of 8 inches
   d. Use vertical reinforcing at maximum spacing of 48 inches
   e. Locate reinforced bond beams at top of wall and at maximum vertical spacing of 12 feet
   f. Minimum reinforcing in accordance with American Concrete Institute 530, American Society of Civil Engineers 5, and TMS 402 as "reinforced masonry"
   g. Space vertical control joints at 24 feet on center or less. Extend horizontal reinforcing through control joints.
   h. Space vertical expansion joints at 72 feet on center or less. Stop horizontal reinforcing each side of expansion joints.
   i. Use normal weight concrete masonry units.

3. Proprietory unit masonry retaining walls may be used if recommended and certified by the Structural Design Professional, or if accepted by the school district and the Ohio Facilities Construction Commission on the basis of certification of the system by a Professional Engineer selected by the manufacturer of the system.

4. Steel sheet piling may be used in lieu of concrete or masonry retaining walls where acceptable to the Geotechnical Engineer, the Structural Design Professional, and the school district.

1.03 FRAMING SYSTEMS

A. General

1. Use American Institute of Steel Construction, Type 2 "simple framing" systems with shear walls or braced frames wherever possible.

2. Use columns and beams ***rather than*** masonry bearing walls for interior lines of support in classroom areas to allow for maximum flexibility for future use of these spaces.

3. The use of light-gauge framing shall be avoided for ***walls in physical education spaces, large group restrooms, receiving/loading areas, mechanical room, music room and kitchen*** areas of buildings, but can be ***used*** for interior walls of steel-framed buildings and for administrative areas, or where used as a finish on the space plate.

1.03 a ROOF FRAMING SYSTEMS

B. Steel Roof Deck on Open Web Steel Joists

1. Roof deck
   a. Minimum galvanizing ASTM A525, G60 (60 ounces per square foot)
   b. Minimum 22-gauge deck
   c. Use puddle welds, self-tapping screws, or pneumatic fasteners ***(rivets)*** to attach deck to supporting structural steel members.

2. Open web steel joists
   a. For roof slopes greater than 1:12, joists shall preferably span parallel to the slope. These joists shall be detailed as special joists.
   b. For roof slopes greater than 1:12, where joists span perpendicular to the slope and are canted, cross bridging shall be used between joists.

C. Cementitious Deck on Steel Subpurlins on Open Web Steel Joists
1. Steel purlins shall be galvanized.

2. Cementitious decks shall be resistant to deterioration due to moisture.

3. Cementitious deck systems shall be certified by a Professional Engineer as being capable of supporting the design loads as shown on the construction documents.

4. The Structural Design Professional shall verify that the purlin and deck system provides adequate lateral bracing for open web steel joists.

5. The Structural Design Professional shall verify that cementitious deck systems provide required diaphragm strength.

D. Composite ***Roof Systems***
1. Where shingle roofing is to be used, composite roof systems consisting of metal deck, rigid insulation, and mineral (nonorganic) nail base connected so as to produce composite action between the material shall be considered in lieu of wood sheathing over rigid insulation.

E. Prefabricated wood trusses with plywood or particleboard sheathing shall not be used for roof systems.

F. Glue laminated beams with wood decking shall not be used for roof systems.

G. Precast concrete roof systems may be used where justified based on cost comparisons with other systems, fire-resistance, and impact on the design of supporting structural elements.
1. Prestressed single and double tees
2. Precast plank

H. Light-gauge metal framed or light-gauge metal truss framed roof systems may be used for roof systems.

I. Plywood and oriented strand board shall not be used as structural roof deck.

1.04 FLOOR FRAMING SYSTEMS

A. Metal Deck/Concrete Slab

1. Comply with SDI *Design Manual (Publication No. 27)*

2. Concrete on steel form deck
   a. Concrete Deck Fill; minimum compressive strength of 3,500 psi at 28 days
   b. Use minimum reinforcing of 0.0018 of the area of concrete.
   c. Fibrous reinforcement shall not be substituted for welded wire fabric or deformed bar reinforcement, but may be used in addition.
   d. Use G60 galvanized deck

3. Concrete on steel composite floor deck
   a. Concrete deck fill; minimum compressive strength of 3,500 psi at 28 days
   b. Use minimum reinforcing of 0.0018 of the area of concrete
   c. Use G60 galvanized deck

4. Cast-in-place flat slabs (1 way or 2 way)
   a. Use minimum compressive strength of 4,000 psi at 28 days

5. Precast concrete plank
   a. Use minimum 2-inches of concrete topping with 1.5 pounds per cubic foot of fibrillated polypropylene fibrous reinforcing

B. Framing Members

1. Open web steel joists
   a. Comply with Steel Joist Institute *Standard Specifications*

2. Composite open web steel joists
   a. Comply with joist manufacturer's design recommendations.
   b. The Professional Engineer shall certify that the system has the capacity to support the design loads shown on the contract documents.

3. Rolled steel members
   a. Use ASTM A992, Grade 50; ASTM 572, Grade 50; steel for wide flange shapes.
   b. Use ASTM A36 or ASTM A572, Grade 50 for angles and plates.

4. Composite rolled beams shall be considered when justified on the basis of cost and serviceability.

5. Precast concrete floor systems shall be considered when justified on the basis of cost, fire-resistance, and impact on the design of supporting members.

1.04 FLOOR FRAMING SYSTEMS (cont'd)

C. Columns

1. Steel rolled sections
   a. Use ASTM A992, Grade 50; ASTM A572, Grade 50; steel for wide flange shapes.
   b. Comply with AISC *Manual of Steel Construction*

2. Hollow structural sections (HSS)
   a. Use ASTM A500, Grade B (46,000 psi yield strength) or ASTM A53, Grade B.
   b. Comply with AISC *Manual of Steel Construction*
   c. Comply with AISC *HSS Connections Manual*

3. Reinforced concrete columns
   a. Minimum concrete compressive strength of 3,500 psi at 28 days
   b. Minimum reinforcing of 0.01 percent of the gross area of column
   c. Comply with American Concrete Institute 318 *Building Code Requirements for Structural Concrete*

4. Precast concrete columns
   a. Precast concrete systems shall be certified by a Professional Engineer to be capable of supporting the design loads shown on the construction documents.

5. Masonry columns
   a. Minimum flexural strength of 1,500 psi at 28 days
   b. Minimum reinforcing of 0.005 percent of the gross area of column

1.05 MASONRY WALL SYSTEMS

A. Engineered masonry systems shall be used for load-bearing and shear walls, and are recommended for exterior walls.

B. Minimum reinforcing in exterior walls shall be in accordance with American Concrete Institute 530/American Society of Civil Engineers 5/TMS 402 for either "reinforced masonry walls" or "partially reinforced masonry walls." In no case shall vertical reinforcement in exterior masonry walls be less than the following:

Nominal Wall Thickness	Reinforced Size and Spacing
6"	#3 at 72"
8"	#4 at 96"
10"	#5 at 96"
12" and 14"	#6 at 96"

C. Minimum reinforcing in masonry bearing walls shall be in accordance with American Concrete Institute 530/American Society of Civil Engineers 5/TMS 402 for either "reinforced masonry walls" or "partially reinforced masonry walls." In no case shall vertical reinforcement in masonry bearing walls be less than the limits shown for exterior masonry walls.

1.05 MASONRY WALL SYSTEMS (cont'd)

D. Minimum horizontal joint reinforcing in interior walls shall be 9-gauge W1.7 or 0.148 inch horizontal joint reinforcing at 16-inch spacing vertically.

E. Minimum horizontal joint reinforcing in exterior walls shall be in accordance with American Concrete Institute 530/American Society of Civil Engineers 5/TMS 402 for "reinforced masonry walls." Use reinforced masonry bond beams to supplement the area of reinforcing steel furnished by horizontal joint reinforcing to meet the minimum reinforcing requirements.

F. Floor and roof members supported by load-bearing masonry shall bear on bond beams with embedded bearing plates designed to resist bearing, uplift, and lateral loads. Anchor rods on bearing plates shall be a minimum of two 1/2-inch diameter headed studs or two #3 hooked anchor rods with 6-inch embedment.

1.06 LATERAL BRACING SYSTEMS

A. Reinforced Concrete

1. Minimum concrete compressive strength of 3,500 psi at 28 days

2. Use minimum reinforcing in accordance with American Concrete Institute 318

B. Masonry Shear Walls

1. Masonry shear walls shall be reinforced in accordance with American Concrete Institute 530/American Society of Civil Engineers 5/TMS 402 as "reinforced masonry walls." In no case shall vertical reinforcement for masonry shear walls be less than that shown for exterior masonry walls.

2. Vertical reinforcing shall be lapped with dowels projecting from the footing.

3. Attachment of steel frames ***used to resist lateral loads*** to masonry shear walls shall be through embedded or adhesive anchor bolts in fully grouted or solid masonry units. Expansion ***sleeve and*** wedge anchors ***can*** be used to ***transfer lateral loads*** to masonry shear walls.

C. Steel

1. Wide flange shapes
   a. Use ASTM A992, Grade 50; ASTM A572, Grade 50

2. Hollow Structural Sections (HSS)
   a. Use ASTM A500, Grade B (46,000 psi yield strength) or ASTM A53, Grade B.

3. Rods, clevises, and turnbuckles
   a. Use ultimate safeties factor of not less than 4.5:1 for the manufacturer's breaking load.

4. Angles and plates
   a. Use ASTM A36 or ASTM A572, Grade 50.

1.07 SLABS ON GRADE

A. Comply with American Concrete Institute SCM-25 *Concrete Slabs on Grade*

B. For classroom and corridor areas, use a minimum 4-inch thick concrete slab with 6 by 6-W1.4 by W1.4 welded wire fabric.

C. Concrete minimum compressive strength of 3,500 psi at 28 days

D. Consider design recommendations for preventing elevated radon levels in new buildings as prescribed in the EPA booklet “Radon Prevention in the Design and Construction of Schools and Other Large Buildings”. (EPA/625/R – 92/016, Jan. 1993)

1.08 LINTELS

A. Lintels in exterior walls consisting of angles, tees, and wide flange shapes, 8 inches or less in depth and 12 feet or less in length, shall be hot-dipped galvanized in accordance with ASTM A123, Grade 65 (1.5 ounces per square foot).

B. Steel lintels in exterior walls, consisting of members larger than 8 inches in depth and 12 feet in length, shall be mill galvanized in accordance with ASTM A641.

C. Steel lintels, other than angles supporting masonry, shall have rigid masonry anchors or dowels at 32-inch maximum spacing to secure masonry to steel.

D. Reinforced masonry or concrete lintels shall be used in exterior walls wherever possible.

E. Lintels in the exterior veneer shall be thermally isolated or separated from the interior masonry load bearing wall or structural system.

END OF SECTION

1.01 GENERAL

A. Structural systems shall be selected during the early stages of the Design.

B. Structural systems shall be designed in strict conformance with national, state, and local codes and with current structural material codes and specifications.

C. Structural design calculations shall be performed for major structural members.

1.02 FOUNDATIONS AND RETAINING STRUCTURES

A. Geotechnical Investigation and Report

1. Geotechnical engineering investigations and reports are required for all new construction and for additions to existing buildings.

2. For all new buildings and all additions larger than 10,000 SF to existing buildings the geotechnical engineering and investigation shall include one boring of sufficient depth to accurately evaluate the Site Class in accordance with Article 1615.1.1 of the Ohio Building Code. If a test boring is not made to a depth of 100 feet, the Geotechnical Engineer is permitted to estimate soil properties below the depth of the boring based on the information obtained from the borings and known geological formation.

3. For all new buildings 10,000 SF and smaller, Site Class D shall be used, unless Site Class E or F soil is likely to be present at the site.

4. Shear Wave Velocity tests shall be required only where the size of the project, the potential construction cost savings, and the likelihood of the recommendation of a Site Class C or less is considered probable.

5. Where foundation system design is based upon presumed soil conditions, the following shall be included in the Construction Documents:
   a. Structural Design Professional shall identify all pertinent soil strength criteria used in his design within the Contract Documents.
   b. Soil bearing capacity values shall be verified in writing during construction by a registered Geotechnical Engineer, confirming such conditions.

1.03 ROOF FRAMING SYSTEMS

A. Roof systems shall be designed in strict conformance with national, state, and local codes and with current structural material codes and specifications.

B. Steel Roof Deck on Open Web Steel Joists

1. Roof deck
   a. Design in accordance with SDI *Design Manual (Publication No. 27)*
   b. Design deck as a diaphragm in accordance with SDI *Diaphragm Design Manual*

1.03 *ROOF* FRAMING SYSTEMS (cont'd)

2. Open web steel joists
   a. Design in accordance with SJI *Standard Specifications and Load Tables*
   b. Design low slope or flat joists to resist ponded water in accordance with SJI *Technical Digest #3 - Ponding*
   c. Supplier of joists shall furnish certification by a Professional Engineer that joists comply with SJI *Standard Specifications and Load Tables*

3. Steel framing members
   a. Design in accordance with AISC *Manual of Steel Construction*

C. Cementitious Deck and Composition Deck on Steel Subpurlins on Open Web Steel Joists

1. Systems shall be certified, by a Professional Engineer, to be capable of supporting the design loads as shown on the Construction Documents.

1.04 FLOOR FRAMING SYSTEMS

A. Deck/Slab

1. Concrete on steel form deck
   a. Design in accordance with Steel Deck Institute *Design Manual*
   b. Design deck/slab as diaphragm in accordance with Steel Deck Institute *Diaphragm Design Manual*

2. Concrete on steel composite floor deck
   a. Design in accordance with Steel Deck Institute *Design Manual*
   b. Design deck/slab as diaphragm in accordance with Steel Deck Institute *Diaphragm Design Manual*

3. Cast-in-place flat slabs (1 way or 2 way)
   a. Design in accordance with American Concrete Institute 318

4. Precast concrete plank
   a. Design in accordance with ACI 318 and PCI *Prestressed Concrete Design Handbook*

B. Horizontal Framing Members

1. Open web steel joists
   a. Design in accordance with SJI *Standard Specifications*
   b. Floor Vibrations
      1) Design of floor members shall include consideration of the relative perceptability of floor vibrations based on the use of the space.

1.04 FLOOR FRAMING SYSTEMS (cont'd)

2) Floor vibration analysis and design shall generally conform to the "Criteria for Human Comfort" as indicated in Figure 2.1 in the AISC "Steel Design Guide Series II – Floor Vibrations Due to Human Activity".

c. Verify that standard camber in joists is accurate for anticipated dead load deflection and that any residual camber does not significantly reduce capacity of floor deck. Specify nonstandard camber where required.

d. Joists shall be certified by a Professional Engineer as capable of supporting the design loads as shown on the construction documents.

2. Composite open web steel joists

a. Design in accordance with joist suppliers design criteria.

b. The joist manufacturer shall furnish certification by a Professional Engineer that composite joists are capable of supporting design loads as shown in the contract documents.

3. Rolled steel beams and channels

a. Design in accordance with AISC *Manual of Steel Construction and Specifications*

b. Specify camber for all rolled steel members in floor systems requiring ½ inch camber or larger.

4. Composite rolled beams and channels

a. Design in accordance with AISC Manual of Steel Construction and Specifications

b. Composite rolled shapes shall be used where floor vibration is considered by the Design Engineer as being an important serviceability criteria.

5. Precast concrete beams

a. Design in accordance with American Concrete Institute 318 and PCI *Prestressed Concrete Design Handbook*

C. Columns

1. Steel rolled sections

a. Design in accordance with AISC *Manual of Steel Construction*

2. Hollow structural sections

a. Design in accordance with AISC *Manual of Steel Construction*

b. Detail connections in accordance with AISC *HSS Connections Manual*

3. Reinforced concrete columns

a. Design in accordance with American Concrete Institute 318

b. Reinforced concrete columns shall be used where practical for columns exposed to the weather and the use of deicing salts.

1.04 FLOOR FRAMING SYSTEMS (cont'd)

4. Precast concrete columns
   a. Design in accordance with American Concrete Institute 318 and PCI *Prestressed Concrete Design Handbook*

5. Masonry columns
   a. Design in accordance with American Concrete Institute 530/ASCE 5/TMS 402 and National Concrete Masonry Association *Design Specifications*

D. Floor Vibrations

1. Design steel floor systems to generally conform to the Acceptance Criteria for Human Comfort as indicated in Figure 2.1 in the AISC, "Steel Design Guide Series 11, Floor Vibrations Due to Human Activity."

2. Analyze steel framed floor systems using the procedures in the AISC, "Steel Design Guide Series 11, Floor Vibrations Due to Human Activity."

3. Precast concrete floor systems designed for normal stress or strength criteria are generally within acceptable limits for floor vibrations.

1.05 MASONRY WALL SYSTEMS

A. Engineered masonry design procedures shall be used for all masonry elements in load-bearing, exterior enclosures and shear walls in school buildings.

B. Empirical masonry design procedures shall not be used for load-bearing, exterior enclosure walls and shear walls.

C. Design all exterior, load-bearing and shear walls for moments, shears, and axial stress or capacity criteria in accordance with American Concrete Institute 530/ASCE 5/TMS 402 as reinforced masonry walls.

1.06 LATERAL LOAD SYSTEMS

A. The Structural Design Professional shall ensure that code-required lateral loads are applied to the structure and that systems and connections between systems are adequate to transmit the loads to the ground.

1. Seismic load resisting systems shall be designed and detailed in accordance with the current provisions from the Ohio Building Code and standard provisions from the materials code for that system (i.e. American Concrete Institute, American Institute of Steel Construction, etc.) Seismic Use Group, as defined in OBC Section 1616.2 shall be Group II ***minimum.***

2. Wind loads shall be based upon the current provisions of Ohio Building Code, using a minimum wind speed of 90 mph (3-second gust), unless local weather data supports higher wind loads.

3. Importance factors for Snow load and Wind load shall be obtained from OBC Table 1604.5, using Category II structure (minimum).

1.07 SLABS ON GRADE

A. Design in accordance with American Concrete Institute 318 and American Concrete Institute SCM-25 *Concrete Slabs on Grade*.

1.08 LINTELS

A. Design all lintels supporting masonry to limit deflection to ***1/600*** of the span or ***0.3"***, whichever is smaller.

B. Design steel lintels in accordance with AISC *Manual of Steel Construction and Specifications.*

C. Design masonry lintels in accordance with ACI530/ASCE 5/TMS 402.

THIS PAGE HAS BEEN LEFT INTENTIONALLY BLANK.

1.01 GENERAL

A. This section establishes the minimum design requirements that must be met by the Plumbing Design Professional. Local codes and standards may take precedence over these requirements.

1.02 SITE DESIGN PARAMETERS

A. Determination of the available site services with regard to gas service, sanitary systems, domestic water system, and fire suppression system is necessary as a part of the site selection process. Refer to Chapter 3, Site Design, for additional information.

B. The building plumbing system design is to be complete to 5 feet outside the perimeter of the building foundation system. There may be some exceptions to this requirement for placement of food service grease interceptors, science room acid neutralizing sumps, water services, gas piping and regulators, and storm water structures. In these cases, the piping structures will be included as part of the building plumbing system design.

C. The Plumbing Design Professional is required to evaluate the need and method to provide gas service to the building. If natural gas service is not available, the installation of liquid propane gas should be investigated. The estimated gas loads for operation of the heating water boilers, domestic water heaters, food service equipment, science program usage, and miscellaneous items are obtained from the appropriate disciplines by the Plumbing Design Professional and totaled with the inclusion of a 10 percent safety factor. Discussion with the local gas company is necessary, both to determine potential service costs and to determine the responsibilities of the building owner and the gas company regarding installation. It is also important to determine the gas pressure requirements for the equipment in the building and communicate this need to the gas company. The Plumbing Design Professional shall design the gas service.

1.03 POTABLE WATER SYSTEM

A. All buildings shall include a potable ***"lead free"*** domestic water system serving all sinks, toilets, showers, food service, custodial needs, hose bibbs, heating and chilled water plant fill systems, and drinking water coolers/fountains. All municipal domestic water entering the building must pass through a reduced pressure backflow preventer to protect the outside water source from contamination in the building. A main pressure-reducing valve is required if the incoming water pressure exceeds 80 psi.

B. Water distribution throughout the facility will be through piping systems located above ceiling areas. Piping installed under slab areas will not be permitted, unless accessible for maintenance on the system. Cross-linked polyethylene (PEX) hot and cold water piping will be acceptable under slab if it is installed in a conduit or sleeve stubbed above the floor. Piping under floor is permitted to be connected to the floor drains/trap primer connections.

C. Domestic water systems within the building shall be copper tubing. The use of polyvinyl chloride, chlorinated polyvinyl chloride, polyethylene, or polybutylene material will not be permitted. An option to the copper pipe is polypropylene SDR 11 (cold water) and SDR 7.4 (hot water supply and return). Piping in ceiling plenum spaces shall have an approved foil fire wrap.

1.03 POTABLE WATER SYSTEM (cont'd)

D. Water piping and gas piping to island sinks shall be in an accessible trench in the floor with a removable cover.

E. The required pressure for operation of the furthest fixture from the incoming service will determine if a pressure booster system will be required. The booster system should be a packaged unit that includes all controls. Provide a constant-speed or VFD drive duplex pump package with bladder-type compression tank to meet the flow requirements. It will be necessary to consider the installation of an emergency power system in order to maintain the operation of the booster system in the event of power outages, if the building is to be used during emergency-type occupancies. Coordination with the Electrical Design Professional will be necessary. Minimum pressure required at the furthest fixture connection shall be 30 psi.

F. Insulate the piping to minimum requirements of current ASHRAE 90.1 standard.

1.04 WATER CONDITIONING/SOFTENING SYSTEMS

A. The water shall be tested for quality to determine the makeup of the water including hardness, mineral content, and chemicals. The recommendation for installation of a water conditioning/softening system should be directly related to the results of the water testing. A total hardness of less than 5 grains will not require a softener system.

B. If the water analysis tests recommend softening, the hot water supply shall be softened. The softening of the cold water can be considered if there is a history of mineral build-up in the cold water piping.

C. Review with school personnel before incorporating water softening in the design.

D. Also provide treatment of sulfur, iron, arsenic, or other chemicals if present in the water, per Ohio EPA standards.

1.05 DOMESTIC WATER HEATER SYSTEM

A. ***Provide life cycle costs analysis for evaluation of the domestic water supply in the building. This evaluation shall apply to proposed central heating with recirculation vs. point of use equipment heating vs. main heating with maintenance cable for group and/or individual restrooms/locker shower rooms and usage of hot water in main portions/wings of the building.***

B. A hot water return system with a recirculating pump ***or heat maintenance cable*** shall be required if the building hot water piping is more than 25 feet in length.

C. The on/off operation of the domestic hot water return pumps shall be controlled by a ***7-day*** time clock or the temperature control system.

D. Instantaneous water heaters with a storage tank shall be required for high use applications in buildings with kitchens and/or shower room facilities, or a combination of 2 power vented heaters installed in a common tank could be used. Tank-type water heaters shall be considered for use in elementary school applications having no dishwasher facilities and no locker rooms.

1.05 DOMESTIC WATER HEATER SYSTEM (cont.)

E. The use of thermostatic mixing valves is required to maintain hot water temperature consistent with the plumbing code requirement to hand washing sinks and showers. Use a single valve or a high/low valve system based on minimum and maximum flow rates.

F. An optional application to the building-wide hot water system is the use of a point-of-use instantaneous water heaters for remote locations.

G. An option to the piped hot water return system/pump shall be the hot water temperature maintenance cable system to keep the domestic hot water piping at a consistent temperature. The wiring shall be accessible for repair.

1.06 SANITARY PIPING SYSTEM

A. Piping materials shall include Schedule 40 polyvinyl chloride with solvent joints, cast iron, no hub, or cast iron, hub and spigot. Do not use Schedule 40 polyvinyl chloride piping where water temperatures could exceed 140 degrees F.

B. Fill material around piping below slab shall be compacted granular material to 95 percent-modified proctor. Piping shall not be installed parallel/directly under walls. Minimum parallel distance from a wall to the pipe shall be 3 feet for repair access. See Figure B-1.

Figure B - 1

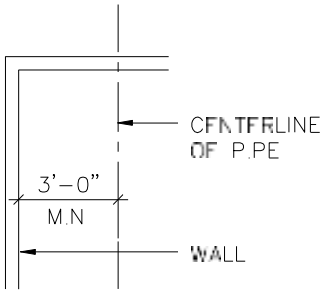

C. Piping above grade shall be Schedule 40 polyvinyl chloride or cast iron, no hub with approved hanger spacing. Piping in a plenum shall be cast iron, no hub. Schedule 40 polyvinyl chloride is not approved for use in a plenum space.

D. Acid waste piping below grade will be Schedule 40 polypropylene with fusion joints or Schedule 40 CPVC chemical waste with solvent weld joints. All acid waste piping above grade shall be Schedule 40 polypropylene with mechanical joints. Acid waste piping in a plenum shall be fire- and smoke-rated polyvinylidene fluoride or glass. Acid neutralizing sumps shall be located on the exterior of the building with access to grade and shall be accessible to staff for ease of inspection and maintenance.

E. Provide information to the Site Design Professional as to the depth of the sewer(s) exiting the building. Provide information to the Structural Design Professional as to the location and depths of the sewer in relationship to footings and columns as they pertain to the project.

1.06 SANITARY PIPING SYSTEM (cont.)

F. Where the temperature of water in the sanitary line can reach 140 degrees, cast iron waste and vent piping shall be installed. Kitchen waste piping is an example.

G. Sanitary sewer cleanouts shall be installed at 50 feet on center up to 4" diameter/ 100 foot on center for ***above 4"*** diameter, and at changes in direction of 90 degrees or more, at the bottom of vertical risers and as the sewer exits the building.

H. All cast iron piping shall comply with ASTM A 888 (or A 74) and be marked with the collective trademark of the Cast Iron Soil Pipe Institute (CISPI) and be listed by NSF International.

1.07 PLUMBING FIXTURES/PLUMBING SPECIALTIES

A. Water closets shall be china, white, standard flush valve, wall hung, and low water consumption type. Automatic/battery or direct wired flush valve is optional.

B. Urinals shall be china, white, standard flush valve, wall hung, and low water consumption type. Automatic/battery or direct wired flush valve is optional. Waterless-type urinals are acceptable.

C. Lavatories shall have lever handles for hot and cold water. An option to the lever handle faucet shall be a battery or hardwired infrared faucet. Faucets accessible to students shall be infrared sensor battery with the battery and electronics/solenoid built into the spout. Temperature control shall be integral with the faucet or remote mixed.

D. Showers shall be low water consumption, pressure-balanced type.

E. Drinking water coolers/fountains shall be handicap accessible.

F. Sinks shall be 18-gauge, 302 or 304 stainless steel.

G. Science lab sinks shall be connected with acid-resistant material. The science casework manufacturer shall provide sinks.

H. In large group restrooms with 3 or more lavatories, the lavatories can be substituted with a comparably sized wash fountain with infrared sensing.

I. All plumbing fixtures and trim designed or designated for use by the handicapped shall meet the Americans with Disabilities Act guidelines.

J. Water supply (hot and/or cold) to the lavatories, sinks, and drinking fountains shall have angle stops with loose key handles.

K. All lavatories, water closets, and urinals shall have wall carriers.

L. Floor drains shall be installed in each large group restroom, locker room, mechanical room, and kitchen area. Provide a sediment bucket in the floor drain if conditions exist where solids may enter the drain.

1.07 PLUMBING FIXTURES/PLUMBING SPECIALTIES (cont.)

M. Sanitary and storm sewer cleanouts shall be installed at 50 feet on center up to 4" diameter and 100 feet on center for 6" diameter and above, and at changes in direction of 90 degrees or more, at the bottom of vertical risers and as the sewer exits the building.

N. Showers shall have a hot and cold, single lever pressure balancing valve with a vandal-resistant head.

O. Service sinks shall be floor-mounted, molded stone, 10 inches high, with a wall-mounted faucet. ***Hot and cold water supply shall have inline check valves located in an accessible location.***

P. Install a cold water hose bibb in each large group restroom, locker room, and mechanical room. The hose bibb shall be recessed mounted behind a lockable door in restrooms and locker rooms, with access by a removable key handle.

Q. Reduced pressure backflow preventers are required on the water supplies to each HVAC makeup water system.

R. A water pressure reducing station requiring 2 pressure reducing valves sized for 1/3 and 2/3 flow shall maintain the water pressure in the building to a maximum of 80 psi, if the incoming water pressure can exceed 80 psi.

S. Clay traps shall be provided in art rooms or where required to prohibit clay and solids from entering the sanitary sewer. The clay trap shall be accessible to clean out the trap.

T. Trap primers are required at all floor drains. Trap primers shall be accessible for replacement.

U. For elementary schools (K-5) and combination schools (K-8 and K-12), provide a stainless steel, wall mounted drinking fountain which is freeze proof, has push button activation, and is ADA accessible. Mount to the exterior wall.

V. Provide floor drain sinks with hinged covers in custodial closets and the main mechanical room for emptying of the power floor cleaning units, where required by the Owner.

W. Provide an emergency thermostatic mixing valve to provide tempered water to the emergency eye wash and/or showers.

1.08 PLUMBING SYSTEMS FOR FOOD SERVICE AREAS

A. Ware washing system will have a booster heater to provide 180-degree water.

B. Provide 3-compartment sink with 140-degree water.

1.08 PLUMBING SYSTEMS FOR FOOD SERVICE AREAS

C. Provide a grease interceptor to serve the kitchen sanitary waste system laden with grease. The grease interceptor shall be located in the interior if serving one fixture or on the exterior if serving two or more fixtures. The exterior interceptor shall be minimum of 500-gallons. The interceptor shall be sized based on the kitchen grease loading and fixture flow. The interceptor shall meet all State and local codes. The exterior tank shall be fiberglass or concrete and meet traffic loading and shall be located a minimum of 10'-0" from the building.

D. Provide 140-degree water to all kitchen equipment except hand washing lavatories**.**

1.09 BUILDING FIRE SUPPRESSION SYSTEMS

A. All buildings shall have a complete fire suppression (sprinkler) system throughout. Available static water pressure, residual pressure, and water flow must be evaluated as a part of this determination.

B. Installation of a water storage system along with the fire pump installation may be required where insufficient water, flow, and pressure are present.

C. A backflow preventer shall be included on all incoming systems.

D. Provide a fire pump (with water storage tank if necessary) if flow/quantity and/or water pressure cannot be met by the on-site water distribution system.

E. Review seismic requirements as required concerning supports, attachments, pipes,and equipment per NFPA, life safety, and state and local requirements.

1.10 ROOF DRAIN/STORM SEWER SYSTEMS

A. Piping materials shall include Schedule 40 polyvinyl chloride with solvent joints, cast iron, no hub or cast iron, hub and spigot.

B. Fill material around piping below slab shall be compacted granular material to 95 percent-modified proctor. Piping shall not be installed parallel/directly under walls. Minimum parallel distance from a wall to the pipe shall be 3 feet for repair access. See Figure B-1.

Figure B - 2

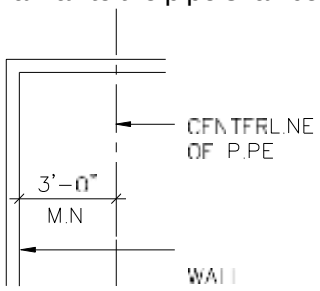

C. Piping above grade shall be Schedule 40 polyvinyl chloride or cast iron, no hub, with approved hanger spacing. Piping above plenum shall be cast iron, no hub. Schedule 40 polyvinyl chloride is not approved for use in a plenum space.

D. Provide connections to all roof drains.

1.10 ROOF DRAIN/STORM SEWER SYSTEMS (cont.)

E. Adherence to state and local plumbing codes will be required.

F. Provide information to the Site Design Professional as to the depth of the sewer(s) exiting the building. Provide information to the Structural Design Professional as to the location and depths of the sewer in relationship to footing and column pass as they pertain to the project.

G. Storm sewer cleanouts shall be installed at 50 feet on center up to 4" diameter/100 foot on center for ***above 4"*** diameter, and at changes in direction of 90 degrees or more, at the bottom of vertical risers and as the sewer exits the building.

H. Insulate roof drain piping/overflows and vents as required to prevent condensation. Insulate piping and drain body that services condensate from an AHU unit on an upper floor.

I. All cast iron piping shall comply with ASTM A 888 (or A 74) and be marked with the collective trademark of the Cast Iron Soil Pipe Institute (CISPI) and be listed by NSF International.

1.11 GAS PIPING SYSTEMS

A. Gas piping shall be Schedule 40 black steel with screw fittings for piping 1 1/2 inches or less and welded fittings for piping 2 inches or larger.

B. Gas piping in plenums shall not contain valves or unions.

C. A gas regulator shall be provided to maintain the correct inlet pressure to each gas appliance. The inlet and outlet piping to each regulator shall be valved with American Gas Association approved valves.

D. The maximum gas pressure into the building shall be as established by the local gas company. Provide the gas company with the gas load for each appliance, and the minimum and maximum operating pressures for each appliance as early in the design process as possible.

E. Provide a valve and a dirt leg at each appliance connection.

F. LP gas piping shall not be concealed.

G. Natural gas piping to island sinks shall be in an accessible trench in the floor with a removable cover.

H. An alternative to the steel piping for natural gas is the use of corrugated stainless steel tubing with a yellow vinyl outer coating for the final low pressure connection to the gas equipment in an accessible / concealed space not accessible to the student.

1.11 GAS PIPING SYSTEMS (cont.)

I. An option to the Schedule 40 steel piping for natural gas in the plenum space can be corrugated stainless steel tubing up to 2 inches in diameter per NFPA S4 state and local gas company requirements. Also follow manufacturer's installation procedures. Tubing shall be approved for plenum use per ASTM E84.

1.12 VALVING

A. Valves will be installed to isolate individual plumbing fixtures and groups of plumbing fixtures to permit shut down of the fixture or equipment item without affecting the remainder of the building.

B. The domestic water system valves shall be bronze construction with a ball-type conventional port.

C. The gas supply to science rooms and art rooms shall have an emergency solenoid-type, automatic shutoff valve with a manual reset. The purpose of the valve is for shut down of the gas in case of an emergency or when the fire alarm system is activated. A solenoid-type, automatic shutoff valve with a manual reset shall be installed to shut the gas off to the gas fed appliances under the kitchen hood in the event there is a fire under the hood. The valves are designed normally closed and are held open by an electric solenoid valve. A mushroom-type wall switch shall be located in the room for solenoid activation.

1.13 HANGERS

A. Provide hangers for all horizontal, suspended, domestic, water, gas, sanitary, and storm piping with distances as noted in the state and local codes.

1.14 IDENTIFICATION

A. Piping shall be identified in mechanical rooms, unfinished spaces without ceilings, above suspended lay-in acoustical ceilings, and crawl spaces for the type of service and direction of flow. Equipment shall be identified with nameplates.

1.15 TESTING

A. Domestic water, storm and sanitary sewers, sprinkler, air, and gas piping shall be tested per state and local codes.

1.16 ENERGY USAGE

A. All systems shall be designed in compliance with the correct ASHRAE STANDARD 90.1 "Energy Standard for Building Except Low-Rise Residential Buildings", and the energy usage requirements prescribed by the Ohio Building Code and the Department of Energy.

1.17 OPTIONAL SYSTEM COMPONENTS FOR EMERGENCY POWER

A. The intent of connecting emergency power to selected components of the Plumbing System is to avoid system damage from freezing weather and allow life safety equipment to operate during power outages.

B. System Components Requiring Emergency Power:

1. Fire pump

C. Components for Emergency Power:

1. Foundation drainage sump pump.

END OF SECTION

1.01 GENERAL

A. This Design Manual includes four heating, ventilating, and air conditioning systems for consideration. Refer to Section 8430. These systems may be used by the HVAC Design Professional without a detailed evaluation. Systems other than the four systems listed will be considered if a completed evaluation detailing the impact the proposed system has on the annual operating cost of the proposed building, including maintenance costs and installation costs, is submitted for approval by the Ohio Facilities Construction Commission.

1.02 APPROVED COMPUTER ENERGY PROGRAMS

A. The following programs are acceptable for use in generating a detailed evaluation of proposed heating, ventilating, and air conditioning systems. Further, the building load calculations necessary for the design of each building will require the use of computer--generated data. Equivalent computer programs that are able to generate the necessary data for evaluation of the proposed heating, ventilating, and air conditioning systems and for generation of the building load data will be considered, but must be submitted for approval prior to use.

1. Trane Trace 700

   a. The Trane Trace 700 program is a PC based program used by the HVAC Design Professional for generation of detailed building system air conditioning loads, energy consumption analysis, and economic analysis. The current version can be obtained from the Trane Company, Customer Direct Service (CDS) Network, La Crosse, WI, 608-787-2000.

2. Carrier HAP

   a. The Carrier Hourly Analysis Program is a PC based program used by the HVAC Design Professional for generation of detailed building system air conditioning loads, energy consumption analysis, and economic analysis. The current version can be obtained by contacting the local Carrier equipment representative or by calling Software Systems Network, Syracuse, NY, 315-432-7072.

3. DOE-2.E

   a. The DOE-2.E is a detailed energy analysis program developed through the United States Department of Energy. A number of vendors across the country have developed software that operates to meet the intent of the DOE-2.E program.

1.03 COMPUTER INPUT DATA

A. The following information will be required in the event that a detailed evaluation of a proposed heating, ventilating, and air conditioning system is being prepared by the Design Professional. Portions of this data will be required for use in developing the building load calculations for sizing of system quantities and equipment.

B. Power utility rates for all types of energy to be investigated as part of developing the systems evaluation must be obtained by the HVAC Design Professional from the utilities that will provide service to the new facility. The types of energy should include electricity, natural gas, and fuel oil. It is probable that each fuel will be provided by a different company requiring multiple contacts. It will be necessary to obtain information regarding standard energy costs, demand costs, monthly charges, and time-of-use charges. The use of an interruptible natural gas service is possible and should be investigated. ***Actual utility rates for the facility are to be obtained from the local utility and used in all energy analyses.***

C. Building envelope data will include the following:

1. Exterior wall areas including separate areas for different wall types and exposures
2. All exterior glass areas by exposure
3. Roof areas - including separate areas for different types and exposures.
4. Floor area for overhangs, slab on grade, slabs above unconditioned spaces, etc.

D. Development of a building usage schedule will be required and must be developed through conversation between the school district personnel and the HVAC Design Professional. It will be necessary to obtain detailed information on the following:

1. Length of the school day
2. Community use of areas such as the gymnasium, student dining, and auditeria
3. Expected occupancy of the building, including specific expectations for areas such as the administrative area
4. Proposed summer usage of the facility

Note: The scheduling information is not critical to the development of the building load calculations, rather only for building system evaluation.

E. Occupancy loads and schedules will mirror the building usage schedules. Input occupancy at 90 percent of capacity during normal school hours for classroom areas and the administration area. After hours occupancy can be considered negligible in these areas. Activity areas such as gymnasiums should be calculated at no more than 25 percent of the full load capacity during unoccupied operation. Weekend occupancy loads are to be considered in the activity areas at 25 percent and the administrative areas at 90 percent for Saturday morning usage. Occupancy levels for generation of the building load calculations should be set at 90 percent of maximum capacity for all spaces. Each area (zone) shall be input for 100% occupancy for at least one hour during normal school occupied hours.

Recommended values for heat gain attributed to each occupant in these and similar spaces are as follows:

ACTIVITY/LOCATION	SENSIBLE (Btu/h)	LATENT (Btu/h)
Academic Core area	250	200
Gymnasium - players	710	1,090
Gymnasium - spectators	275	275
Student Dining	275	275

1.03 COMPUTER INPUT DATA (cont.)

F. Lighting systems shall be consistent throughout the building. The lighting load shall be input for consideration as a cooling load only, and should not be used to credit the winter heating load.

The HVAC Design Professional is required to coordinate and review proposed lighting requirements for each building with the Electrical Design Professional prior to generating a final energy load analysis. Usage of the lighting systems should mirror the occupancy scheduling for each area in the building. It will be necessary to maintain a minimum of 5 percent lighting energy throughout the unoccupied times to account for emergency and night lighting. ***The following lighting power densities shall be used to establish the base 90.1 energy model. The proposed lighting power densities must be obtained from the Electrical Design Professional.*** The following denotes maximum lighting load requirements (per the energy code):

BUILDING LOCATION	LOAD (watts/SF)
Academic Core	1.4
Administrative Area	1.1
Gymnasium	1.4
Student Dining	0.9
Media Center	1.2
Locker/Shower Room	0.6
Corridor	0.5
Restrooms	0.9
Electrical/Mechanical	1.5
Library	1.2
Student Dining/Auditeria	1.2

plus a direct load for proposed stage lighting. (Coordinate with Electrical Design Professional)

G. Computer locations and expected usage will impact every building designed. All classroom areas will be wired for computers. Include a minimum of 135 watts for each computer station in the building. This load includes the total expected heat gain for a desktop computer and color monitor. Additional loads can be expected for printers and TV monitors, but such loads can be considered negligible regarding the impact on the total building load.

Note: Refer to Chapter 4, Chapter 5, and Chapter 6 for references on equipment requirements and for additional information on quantities.

H. Miscellaneous equipment locations and usage includes equipment in the building such as copiers, refrigerators, microwave ovens, unusual lighting considerations, and general loads throughout the building. The consideration for the loads should be during the occupied time of day only. Miscellaneous loads will be considered negligible during the unoccupied time of day. The following denotes the miscellaneous equipment loads for consideration and the quantity of the load:

TYPE OF EQUIPMENT	AMOUNT OF LOAD
Copiers	400 watts
Refrigerators	500 watts
Microwave ovens	750 watts
Ice makers	*
Kitchen ware washer	*
Kitchen	10 watts per square foot
Stage/Platform area	5,000 watts for lighting

* Refer to ASHRAE handbook of fundamentals for equipment specific heat load.

1.03. COMPUTER INPUT DATA (cont.)

I. The infiltration expectation for each building must be included as part of each building load and energy evaluation. Consider only the effects of infiltration during the unoccupied times of the building. Both cooling and heating infiltration loads must be considered. The entry doors are to be calculated at a minimum of 100 CFM of air infiltration for each 3-foot wide exterior door. Window infiltration is to be considered negligible as to its affect on the building load.

J. The ventilation requirements for the building load are required to adhere to the Ohio Building Code requirements and ASHRAE Standard 62. Specific rates of flow per building occupant as scheduled in Section 8420.

1.04 SYSTEMS EVALUATION REQUIREMENTS

A. In the event a detailed systems evaluation is generated for a proposed heating, ventilating, and air conditioning system, it will be necessary that the evaluation generate cost values for the following specific items. This data will be presented in an organized form per ASHRAE 90.1 appendix G to the Ohio Facilities Construction Commission for review and consideration:

1. Installed cost per square foot
2. Annual operating cost per square foot
3. Annual maintenance cost per square foot

1.05 OPTIMIZE ENERGY PERFORMANCE

A. Demonstrate a 30% improvement in the proposed building performance (energy cost) rating compared to the baseline building performance rating per ASHRAE/IESNA Standard 90.1 ***2007*** (without amendments) by a whole building project simulation using the Building Performance Rating Method in Appendix G of the Standard.

1. Appendix G of Standard 90.1 ***2007*** requires that the energy analysis done for the Building Performance Rating Method include ALL of the energy costs within and associated with the building project. The proposed design:

a. Must comply with the mandatory provisions (Sections 5.4, 6.4, 7.4, 8.4, 9.4, and 10.4) in Standard 90.1 ***2007*** (without amendments)

b. Must include all the energy costs within and associated with the building project

c. Must be compared against a baseline building that complies with Appendix G to Standard 90.1 ***2007*** (without amendments). The default process energy cost is 25% of the total energy cost for the baseline building. For buildings where the process energy cost is less than 25% of the baseline building energy cost, the submittal must include supporting documentation substantiating that process energy inputs are appropriate. For the purpose of this analysis, <u>process energy</u> is considered to include, but is not limited to: office and general miscellaneous equipment, computers, elevators and escalators, kitchen

cooking and refrigeration, laundry washing and drying, lighting exempt from the lighting power allowance (e.g. lighting integral to equipment) and other (e.g. waterfall pumps). Regulated (nonprocess) energy includes lighting (such as for the interior, parking garage, surface parking, façade, or building grounds, except as noted above), HVAC (such as for space heating, space cooling, fans, pumps, toilet exhaust, parking garage ventilation, kitchen hood exhaust, etc.), and service water heating for domestic or space heating purposes. Process loads shall be identical for both the baseline building performance rating and for the proposed building performance rating. However, project teams may follow the Exceptional Calculation Method (ASHRAE 90.1 ***2007*** G2.5) to document measures that reduce process loads. Documentation of process load energy savings shall include a list of the assumptions made for both the base and proposed design, and theoretical or empirical information supporting these assumptions.

THIS PAGE HAS BEEN INTENTIONALLY LEFT BLANK.

1.01 GENERAL

A. The heating, ventilating, and air conditioning system design criteria denoted as a part of this Design Manual have been developed or are obtained directly from accepted engineering design references such as the ASHRAE manuals and standards, the state of Ohio code references, and good engineering practice. The HVAC Design Professional should review each requirement and obtain or develop the necessary information for each specific building before proceeding with the systems evaluation as denoted in Section 8410.

1.02 OUTDOOR AIR DESIGN VALUES

A. Summer and winter outside air design values shall be derived from standard ASHRAE compiled weather data located in the latest edition of the ASHRAE Fundamentals Handbook. The city nearest the proposed construction project is to be selected for evaluation. Use the 99 percent design values for heating design dry-bulb and the 2 percent design values for cooling design dry-bulb and mean coincidental wet-bulb.

B. In addition, it is strongly recommended that outdoor conditions be considered in the overall design where there is a high wet bulb temperature coincident with an outdoor dry bulb temperature equal to the proposed building supply air temperature for any air handling units with ventilation. For instance, address what happens to building indoor humidity levels when the outside air is 75 deg F/90% relative humidity and a 100% outdoor air unit is supplying 75 deg. F supply air to the facility.

1.03 INDOOR AIR DESIGN VALUES

A. Indoor air temperature design values must reflect the need for energy conservation and shall be in accordance with the Ohio Building Code, Mechanical Code.

B. The occupied temperatures used for building load calculations shall be within the range denoted for summer and winter values. The HVAC Design Professional must consider occupant comfort, as well as energy conservation, in selecting the actual temperature for design and operation of the systems. Summer design values shall range from 75 degrees Fahrenheit to 78 degrees Fahrenheit. Winter design values shall range from 70 degrees Fahrenheit to 72 degrees Fahrenheit. The relative humidity of the building spaces shall be targeted at 50 percent during the summer. Humidification in the winter is not required. For mechanical and electrical spaces, the indoor winter design temperature shall be minimum 60 degrees Fahrenheit and the indoor summer design temperature (except for boiler rooms) shall be 85 degrees Fahrenheit.

C. Night setback temperatures shall be used for all systems. Winter setback temperature shall be 55 degrees Fahrenheit. The summer setup temperature shall be 85 degrees Fahrenheit with an additional requirement that the system shall operate as required to maintain a relative humidity in the building area that is between ***55*** and ***60*** percent, ***maintaining 65 percent during summer, unoccupied period and 60 percent at all other times.*** Maintaining humidity levels below 60 percent will result in the periodic operation of the HVAC system during the summer months to reduce the potential for mold and mildew in the building.

1.04 OUTDOOR AIR VENTILATION REQUIREMENTS

A. Outdoor ventilation rates shall be calculated for each occupied space and shall conform to the requirements for ASHRAE Standard 62.1(most recent as adopted by OBC or USGBC), and the requirements of the Ohio Building Code, Mechanical Code.

B. Each system (other than systems using dedicated outdoor air units, including water source heat pumps, chilled beams or variable refrigerant flow) shall include controls for a 100 percent economizer cycle to cool the building when outside air conditions are conducive to cooling.

C. Energy recovery shall be used as a part of the design for any system that provides more than 30% outside air at a minimum ventilation rate in order to reduce the energy consumption required to provide the necessary outdoor ventilation rates. The energy recovery systems will require both sensible and latent heat recovery necessitating the use of desiccant heat wheels or the equivalent. The design may omit the energy recovery on systems where demand ventilation control via a carbon dioxide measuring system is provided for large variable occupancy single-zone spaces such as gymnasium and dining/auditeria spaces.

D. Carbon dioxide levels shall be monitored through the direct digital temperature control system for proof of system operation to maintain a carbon dioxide level in the building of as recommended by ASHRAE Standard 62 and the Ohio Building Code. The use of space specific carbon dioxide sensors are recommended for this operation. Return air sensors may be considered provided accurate readings can be obtained. It is not the intention of this guideline to require the use of carbon dioxide sensors for a reduction of outside air quantities below the calculated minimum air flow requirements for all spaces, although is required in large variable occupancy single-zone spaces such as gymnasium and dining/auditeria spaces.

E. Ventilation calculations shall use the Ventilation Rate Method or the Indoor Air Quality Method. If the IAQ Method is used, complete calculation documentation shall be submitted at the Design Development Submittal, and specifications must include a performance test after installation. Use of the IAQ Method does not supercede any other system design requirements.

F. All mechanical ventilation systems shall utilize some means of mechanical dehumidification, unless analysis is done showing dehumidification is not needed at all outside air conditions.

G. Designer shall consider using 100% DOAS unit as supplemental heating by allowing recirculation of return air when designing systems such as heat pump, chilled beam,etc.

1.05 AIR FLOW RATES FOR BUILDING SPACES

The following air flows denote the recommended "design" airflow rates for each space. Supply airflow rates given shall be based on the volume of the breathing zone as defined in ANSI/ASHRAE Standard 62.1 ***(most recent as adopted by OBC or USGBC)***. When using VAV systems, it is not intended that these are the minimum airflow to the space. Exhaust air rates shall be the value shown below or as required by the Ohio Mechanical Code, whichever is higher, ***but not less than primary Supply Air. Exhaust air rates for Art Room, Science Lab and Life Skills Lab served by dedicated outside air systems (DOAS) shall be established at 125 percent of the primary supply air rate for the space and adjustments incorporated in to the sequences of operation to decrease relief air whenever the local space exhaust is energized.***

	SPACE	SUPPLY AIR	EXHAUST AIR
1.	Classroom	6 air changes/hour	N/A
2.	Administrative	6 air changes/hour	N/A
3.	Gymnasium	4 air changes/hour	N/A
4.	Art Room	6 air changes/hour	0.7 cfm/SF
5.	Student Dining	6 air changes/hour	N/A
6.	Locker Room	90% of exhaust	1.0 cfm/SF
7.	Science Lab	6 air changes/hour	1.0 cfm/SF
8.	Life Skills Lab	6 air changes/hour	0.7 cfm/SF
9.	Food Service	6 air changes/hour	canopy hood
10.	Storage Room	N/A	1.0 cfm/SF*
11.	Toilet Room	N/A	75 cfm per fixture
12.	Media Center	6 air changes/hour	N/A
13.	Custodial	N/A	1.5 cfm/SF
14.	***Recycling***	***N/A***	***1.0 cfm/SF***

** Storage Rooms shall be not required to be exhausted if there is no possible objectional transfer (odors or hazardous gas) to adjacent spaces.*

1.06 TEMPERATURE CONTROL SYSTEM

A. All temperature control systems installed shall be electronic, direct digital controls. Pneumatic controls in all or portions of the control system will not be permitted. Each facility will be provided with the means to access the control system software with a desktop or laptop computer. It will be necessary for the HVAC Design Professional to advise the school district of the options for control and management of the building available through the direct digital control system.

B. Thermostatic zoning shall be developed using good engineering practice. Dissimilar spaces shall not be grouped on the same thermostat. Each classroom shall be an independent zone. Other zones may also be required to be separately thermostatically controlled; carefully review space requirements of the manual for these requirements. Occupied/unoccupied scheduling shall be based on the associated air handling system. Each thermostat zone associated with digital control shall have a means to override the schedule for temporary occupancy.

1.06 TEMPERATURE CONTROL SYSTEM (cont'd)

C. The discharge air temperature for each system shall be adjustable and shall be reset as a function of the direct digital control system.

D. The economizer control shall be set through the central direct digital controller based on global outside air temperature and humidity.

E. The direct digital control system shall be designed to place emergency calls to designated school personnel in the event of equipment failure.

F. Options shall be investigated with each direct digital control system for the operation of exterior, corridor, and restroom lighting systems through the energy management computer.

G. The commissioning agent, temperature control contractor, HVAC contractor, and design team shall have a temperature controls presubmittal meeting to discuss the scope of work and to review the proposed graphics package.

H. Designer is to have all temperature controls indicated on the drawings, including components, sensor locations, control point diagrams, and detailed sequences of operation for each item being controlled. Deferring to the temperature control contractor to develop sequences of operation is not acceptable.

1.07 ENERGY USAGE

A. All systems shall be designed in compliance with the ASHRAE STANDARD 90.1 ***(most recent as adopted by OBC or USGBC)*** "Energy Standard for Building Except Low-Rise Residential Buildings", and the energy usage requirements prescribed by the Ohio Building Code and the Department of Energy.

B. Systems shall be evaluated and considered to increase energy efficiency beyond requirements of ASHRAE 90.1 and reduce energy consumption costs. Electric resistance heating is discouraged from use while other fuel sources are readily available.

1.08 OPTION SYSTEM COMPONENTS FOR EMERGENCY POWER

A. The intent of connecting emergency power to selected components of the HVAC system is to provide an opportunity to limit damage from freezing weather during a power outage of a short duration.

B. System Components Not Required for Power, but optional if within budget:
1. Exterior heat tracing circuits.
2. DDC system controllers and components related to remote alarming.
3. Air handling unit preheat coil (heating coil) run-a-round pumps.
4. Cooling tower basin heaters.
5. Chilled water circulating pump, when used for chiller freeze protection.
6. Remote fire pump house heating system.
7. Fire pump.
8. Foundation drainage sump pump.

1.09 EXTERIOR NOISE CONTROL

A. The location of exterior mechanical equipment shall be reviewed by the Design Professional for its sound impact, both inside and outside the building.

B. Exterior equipment operation shall not cause indoor sound levels to exceed generally accepted levels for the space. Refer to ASHRAE for recommended guidelines.

C. Exterior sound levels shall be in compliance with the local governmental ordinances. When these values are not governed, the following shall be used for designs. The sound level created by the equipment shall not exceed the values listed measured at the property line.

Daylight hours:	55 dBA
Nighttime hours:	50 dBA

1.10 INTERIOR BACKGROUND NOISE LEVEL (HVAC equipment only)

A. Option 1 - Using the methodology described in annexes B through D of ANSI Standard S12.60-2002, achieve a maximum background noise level in classrooms and other primary learning spaces of 45 dBA.
- OR -

B. Option 2 - Design classrooms and other core learning spaces using the methodology listed in the 2003 HVAC applications ASHRAE Handbook, Chapter 47, on Sound and Vibration Control, and achieve an RC (N) Mark level of 37.

C. Achieve a maximum background noise level in classrooms and other core learning spaces of 45 dBA by calculating core learning space noise levels for the HVAC system design using mechanical system noise calculation methods as defined in the 2003 HVAC Applications ASHRAE Handbook, Chapter 47, Sound and Vibration Control. Submit calculations for all core-learning spaces, confirming compliance with the 45 dBA limit. Commercially-available software may be used to perform the calculations for core learning space noise levels, provided calculations are based on the 2003 HVAC Applications ASHRAE Handbook, Chapter 47, Sound and Vibration Control.

1.11 CUSTOM PACKAGED PENTHOUSE SYSTEMS

A. Application – The use of Custom Package Penthouse Systems may be applied to multistory schools where more than 40% of the building is above the first floor or on schools where land use restrictions prohibit putting cooling equipment (chillers, cooling towers, etc.) on grade.

B. General Construction – It is in no way the intent of using a Custom Packaged Penthouse System to compromise the system design, maintainability, or energy efficiency of the HVAC system. The use of a Custom Packaged Penthouse should conform to the following guidelines:

1. Penthouse is a part of the building and as such the square footage counts in the prescribed formulas.

1.11 CUSTOM PACKAGED PENTHOUSE SYSTEMS (cont'd)

2. All components in the Penthouse shall be installed with the manufacturer's recommended clearances and code requirements.

3. Walkway heights, widths, means of egress and life safety systems shall comply with the building code for mechanical spaces.

4. Access to the Penthouse shall include a fully code compliant interior stairway. Elevator access should be considered in buildings 3 stories or more.

5. Exterior appearance of the Penthouse shall be an integral part of the building design.

6. Penthouse shall attach in such manner that it becomes an integral part of the building.

C. Fire Suppression shall comply with the applicable sections of this manual.

D. Plumbing shall comply with the applicable sections of this manual.

E. HVAC shall be designed in compliance with the approved systems in this previously listed Chapter and components in compliance with Chapter 9.

1. Exception: A Penthouse System may use direct expansion cooling with evaporative condensing in lieu of a chilled water system, provided the following criteria is met.

a. All equipment is part of the Penthouse construction.

b. Capacity control is provided on air system supply temperature from full load to 10% of full load with an accuracy of +/- 2 deg. F. without the use of hot gas bypass.

c. DX cooling coils shall be intertwined design.

d. Refrigeration compressors are either scroll, screw or centrifugal type.

e. Sound levels inside the Penthouse comply with all OSHA regulations.

1.12 HVAC SYSTEMS COMMISSIONING

A. Refer to Commissioning Section 9101-019100 for additional information.

1.13 ELEMENTARY MERCURY

A. No elemental mercury or mercury-containing instruments, equipment, or other items shall be permitted anywhere on school property.

1.14 LOCAL OR GENERAL EXHAUST VENTILATION

A. All indoor areas subject to the regular or frequent emission of hazardous airborne contaminants shall be equipped with local or general exhaust ventilation systems designed to effectively control emissions and minimize human exposures. Such areas include visual arts rooms, career tech labs, science rooms, and chemical storage areas. 24-hour operation of exhaust fans servicing science prep areas and custodial spaces where hazardous chemicals are used or stored shall be required. Sanitary vent stacks shall extend 2 feet above outdoor air intakes within 10 feet.

1.15 INTAKE AND RELIEF LOUVER LOCATIONS

A. Locations shall comply with current version of Ohio Building Code and ASHRAE 62.1***(most recent as adopted by OBC or USGBC)***

B. Intakes shall be located a minimum of 3’-0” above grade or flat roof to reduce snowdrift blockage.

THIS PAGE HAS BEEN INTENTIONALLY LEFT BLANK.

1.01 GENERAL

A. The descriptions of the four accepted heating, ventilating, and air conditioning systems have been included in this manual as listed below. It will be the responsibility of the HVAC Design Professional to utilize a system as described in this section, unless suitable documentation to justify a different system type has been submitted.

1.02 CENTRAL PLANT VARIABLE AIR VOLUME SYSTEM WITH HOT WATER REHEAT TERMINALS

A. Central Heating Plant

1. A minimum of 2 heating water boilers shall be provided. Boiler selection shall consider the operating efficiency of the heating plant. Boiler shall be capable of providing up to 95% efficiency and shall not be below 83% efficiency at any point in the operating range. Electric resistance heating is discouraged from use when other fuel sources are readily available.
   a. Gas-fired, forced draft boilers
   b. Gas-fired, atmospheric boilers
   c. Fuel oil boilers
   d. Dual-fuel (fuel oil and gas) boilers
   e. Gas-fired, high efficient, forced draft boilers

2. Total heating capacity of the boiler plant shall be approximately 130 percent of the building design load.

3. Design water supply temperatures shall be in the range of 130 to 190 degrees Fahrenheit. Heating plant shall be capable of resetting supply water temperature in order to optimize performance based on equipment efficiency ratings and reduced heating requirement. Reset supply water temperature shall be lower than design supply water temperature. Low supply water temperatures will necessitate the use of at least one condensing boiler. If a combination of condensing and non-condensing boilers is selected, care shall be given to ensure that non-condensing boilers do not operate when return water temperature is below 140 degrees Fahrenheit. ***The Design Professional shall evaluate the impact in first cost and operating cost of a system with low supply water design temperature versus a system with a high supply water design temperature with a more aggressive reset schedule.***

4. Design water temperature drop in the system shall be maintained between 20 degrees Fahrenheit and 40 degrees Fahrenheit.

5. Heating water distribution loop shall make use of a reverse return or direct return piping arrangement. Direct return systems shall use flow controllers for water balancing.

6. The use of a primary/secondary-piping loop is not mandatory.
7. A minimum of 2 pumps shall be used for water circulation to the building system. It is recommended to use 2 pumps, each sized between 50-75 percent of the total system flow at 100 percent of the required pressure. Design Professional shall evaluate pump operation range against the system curve to ensure stable operation with one or both pumps operating. Additional pumps will be required if a primary/secondary-piping loop is included. Direct return systems shall use automatic flow controllers for water balancing.

1.02 CENTRAL PLANT VARIABLE AIR VOLUME SYSTEM WITH HOT WATER REHEAT TERMINALS (cont'd)

a. A parallel pumping configuration is required (not necessarily running at the same time).

b. The heating water system shall be capable of a minimum 50 percent flow reduction through the use of two-way control valves, three-way control valves, and variable speed pumps.

8. Variable speed pumping shall be utilized on systems that require 10 horsepower or greater pump horsepower. Variable speed pumping shall not be utilized where detrimental to the equipment. Each pump shall have its own variable frequency drive and is not permitted to share a variable frequency drive with another pump.

9. Air removal and/or containment methods are required on closed loop applications.
   a. Expansion tanks
   b. Air separators
   c. Air vent

10. Each system shall be provided with water treatment system to prevent corrosion and scaling in the heating water system.

11. A combustion air system for each boiler shall be installed to meet the code. The HVAC Design Professional must provide a means for preheating the incoming air or maintaining a minimum of 55 degrees Fahrenheit within the boiler room area. Control of the dampers shall be through the direct digital control system and will include dampers and control for the water heater system.

12. The heating water plant shall be designed to account for the effect of the heat recovery equipment.

B. Central Cooling Plant

1. Chiller system shall be either air-cooled or water-cooled and shall utilize one of the following compressor types:
   a. Centrifugal
   b. Rotary screw
   c. Scroll

2. It is recommended that the quantity of chillers be determined based on the total building cooling requirement. Each chiller shall have the ability to reduce down to a minimum of 10% capacity without surging.

Total Chiller Plant Capacity	Number of Chillers
≤300 tons	One
<300 tons, <600 tons	Two
≥600 tons	Two minimum, with chillers added so that no chiller is larger than 800 tons

1.02 CENTRAL PLANT VARIABLE AIR VOLUME SYSTEM WITH HOT WATER REHEAT TERMINALS (cont'd)

3. Design Professional shall consider incorporating strategies to further reduce energy consumption of the Central Cooling Plant. Such strategies may include:
- ***a. Hot gas heat recovery.***
- ***b. Variable speed compressors.***

4. Outdoor chillers exposed to freezing weather conditions must include some method of freeze protection. The following options are recommended for investigation.
- ***a. Glycol solutions can be used throughout the entire chilled water system to prevent freezing.***
- ***b. Heat exchangers may be used to isolate exterior chiller systems and allow glycol use in only the exterior piping.***
- ***c. Circulating pumps can be used to keep water flowing through the chillers when ambient temperatures are below freezing.***
- ***d. Electric heat tracing for the evaporator barrel and any piping located above the frost line.***
- ***e. Remote indoor evaporator barrels.***
- ***f. Indoor evaporator and compressor with remote outdoor, air-cooled condenser.***

5. Outdoor chillers exposed to freezing weather conditions must include some method of freeze protection. The following options are recommended for investigation:
- ***a. Glycol solutions can be used throughout the entire hilled water system to prevent freezing.***
- ***b. Heat exchangers may be used to isolate exterior chiller systems and allow glycol use in only the exterior piping.***
- ***c. Circulating pumps can be used to keep water flowing through the chillers when ambient temperatures are below freezing.***

6. Chillers should be selected using the occupant capacity of the building instead of the sum of occupants in the spaces.

7. Chillers should be selected at 100 percent of the building design load.

8. Design water supply temperatures shall range between 40 degrees Fahrenheit and 45 degrees Fahrenheit.

9. Design water temperature rise in the system shall be maintained between 14 degrees and 16 degrees Fahrenheit.

10. Chilled water distribution loop shall make use of a reverse return or direct return piping arrangement.

11. The use of a primary/secondary-piping loop is required when multiple chillers are used. Multiple chillers are to be set up in a parallel arrangement.

1.02 CENTRAL PLANT VARIABLE AIR VOLUME SYSTEM WITH HOT WATER REHEAT TERMINALS (cont'd)

12. ***A minimum of one pump shall be used for water circulation to the building system. It is recommended to use 2 pumps, each sized between 50-75 percent of the total system flow at 100 percent of the required pressure. Design Professionals shall evaluate pump operating range against the system curve to ensure stable operation with one or both pumps operating. Additional pumps will be required if a primary/secondary-piping loop is included and each chiller shall have a dedicated primary pump. Direct return systems shall use flow controllers for water balancing.***
    - ***a. A parallel pumping configuration is required (not necessarily running at the same time.)***
    - b. The chilled water system shall be capable of a minimum 50 percent flow reduction through the use of two-way control valves, and variable speed pumps.

13. Variable speed pumping shall be utilized on systems that require 10 horsepower or greater. Variable speed pumping shall not be utilized where detrimental to the equipment. Each pump shall have its own variable frequency drive and is not permitted to share a variable frequency drive with another pump.

14. Air removal and/or containment methods are required on closed loop applications.
    - a. Expansion tanks
    - b. Air separators
    - c. Air vent

15. Each closed loop system shall be provided with a water treatment system to prevent corrosion and scaling in the chilled water system.

16. Cooling towers are required for water-cooled chiller systems and should include one of the following cooling tower types:
    - a. Induced draft (cross-flow)
    - b. Forced draft (counter-flow)
17. Cooling towers shall be located at the rear of the building or on the roof. If roof mounting is selected, vibration isolation methods must be utilized.
18. Cooling towers shall be sized to maintain condenser water temperature to the chillers during a design day with ambient wet-bulb temperatures equal to the 2 1/2 percent design wet-bulb value. This value is different than the Mean Coincident wet-bulb value.
19. ASHRAE 90.1 baseline system on large schools is to provide water cooled chillers. Condenser water temperatures shall be selected to obtain maximum energy efficiency. Condenser water optimization to minimize the total equipment energy (including pumping) is required for various wet bulb temperatures during the cooling season. The optimal setpoint will vary for different compressor (screw, centrifugal and scroll) types and their unloading method. The use of increased condenser water delta T from 10 degrees F to 15 degrees F shall be reviewed during design to decrease pumping energy. The goal is to optimize the chilled water system total operating power to its lowest practical value.

1.02 CENTRAL PLANT VARIABLE AIR VOLUME SYSTEM WITH HOT WATER REHEAT TERMINALS (cont'd)

20. Capacity reduction methods for cooling towers, such as multiple fans, two-speed fans, variable frequency drives, inlet dampers, condenser water mixing valves, or dump valves, shall be used to maintain condenser water temperature during partial load conditions. If a variable frequency drive is used on the cooling tower fan, an interlock wire between the remote disconnect and the VFD shall be installed to shut down the drive if the disconnect is turned off.

21. A single condenser water-circulating pump shall be used for each water-cooled chiller. Pump components shall be suitable for cooling tower systems.

22. A remote tank capable of holding the water for the cooling tower system shall be provided below the cooling tower level within a tempered space. If a remote tank is not possible, heat tracing must be provided for piping exposed to freezing weather and the sump of the cooling tower.

23. The cooling tower water treatment system shall include a makeup water connection through a backflow preventer and shall be automatic in operation to prevent scaling, corrosion, and bacterial growth.

24. The chilled water plant shall be designed to account for the affect of the heat recovery equipment.

25. Thermal ice storage systems may be considered where local utility rates prove the system to be beneficial. Ice storage systems may be utilized where a simple payback of less than 5 years is realized. For simple paybacks between 5 and 10 years, a joint decision shall be made between the HVAC Design Professional and the school district as to whether ice storage should be utilized. Ice storage systems shall not be utilized if a simple payback of 10 years or less cannot be realized.

26. DX cooling shall only be utilized as described in paragraph G. Supplemental cooling systems.

C. Air Systems

1. All air handling units are to be investigated as to whether a modular or custom unit is needed. Whether the unit is a modular type or custom type is to be clearly called out on the air handling unit schedule.

2. Variable Volume Air Handling Units

a. Air handling units should be located strategically throughout the building to distribute a constant temperature air to terminal units. Locations of air handling units can be dedicated mechanical rooms or mechanical decks. Air handling units may not be located exterior to the building.

b. Each air handling unit shall include the following components as a minimum: Supply air fan, cooling coil, heating coil, filters, and mixing box***. In addition, it is recommended that ultraviolet lighting upstream of the unit cooling coil be considered to reduce coil cleaning frequency and to help control pathogens.***

1.02 CENTRAL PLANT VARIABLE AIR VOLUME SYSTEM WITH HOT WATER REHEAT TERMINALS (cont'd)

c. Supply air temperature distributed to the terminal units shall be designed for a duct temperature of 55 degrees Fahrenheit or as required by the computer-generated building load output data. Heating coils shall be sized for a minimum of 100 degrees Fahrenheit leaving air temperature during morning warm-up. Morning warm-up shall be with 100% AHU airflow and VAV boxes 100% open. ***In addition, it is recommended that ultraviolet lighting upstream of the unit cooling coil be considered to reduce coil cleaning frequency and to help control pathogens.***

d. Each air handling unit shall include a variable frequency drive for the fan motor to reduce the air volume available to the system.

e. Energy recovery methods such as desiccant wheels shall be included to precondition the outside air ***for any system that provides more than 30% outside air minimum ventilation rate***. The energy recovery method selected by the HVAC Design Professional must include latent heat recovery as well as sensible heat recovery.

f. Variable air volume systems should be investigated for classrooms, media centers, gymnasiums, student dining, auditerias, and food service, music, and administration areas.

g. All variable air volume systems shall include air flow monitoring systems to maintain the minimum outside air flow requirements as set forth in the Ohio Building Code, Mechanical Code and ASHRAE Standard 62 during occupied hours at all volumes of supply air.

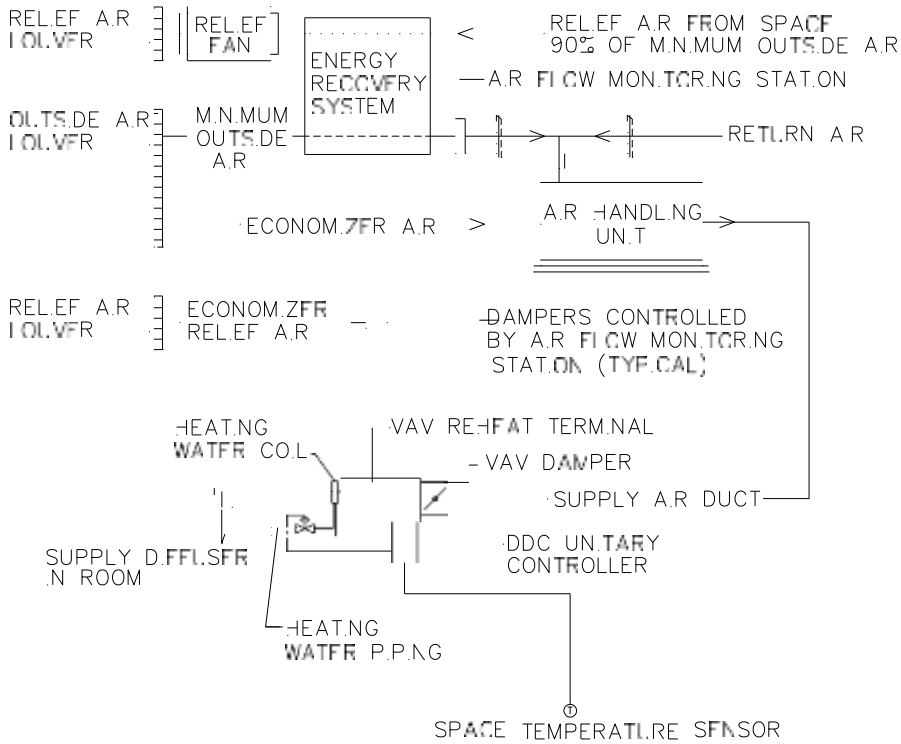

VAV Reheat Schematic
Figure B-1

1.02 CENTRAL PLANT VARIABLE AIR VOLUME SYSTEM WITH HOT WATER REHEAT TERMINALS (cont'd)

3. Single Zone Variable Volume Air Handling Units
   a. Air handling units should be located as close as possible to the space being conditioned. Locations of air handling units can be dedicated mechanical rooms or mechanical decks. Air handling units may not be located exterior to the building.
   b. Each air handling unit shall include the following components as a minimum: supply air fan, cooling coil, heating coil, filters, and mixing box. In addition, it is recommended that ultraviolet lighting upstream of the unit cooling coil be considered to reduce coil cleaning frequency and to help control pathogens.
   c. Supply air temperature distributed to the space during cooling mode shall be designed for a duct temperature of 55 degrees Fahrenheit or as required by the computer-generated building load output data. Air temperature distributed to the space during heating mode shall be as required to maintain space temperature; however, the heating coil should be sized to maintain a minimum of 100 degrees Fahrenheit leaving air temperature for morning warm-up. Morning warm-up shall be with 100% AHU airflow. Electric resistance heating is discouraged from use when other fuel sources or heating medium (heating water) are readily available.
   d. Each air handling unit shall include a variable frequency drive for the fan motor to reduce the air volume available to the system.
   e. Energy recovery methods such as desiccant wheels shall be included to precondition the outside air for any system that provides more than 30% outside air minimum ventilation rate. The energy recovery method selected by the HVAC Design Professional must include latent heat recovery as well as sensible heat recovery. Energy recovery may be omitted on large variable occupancy single zone systems where CO_2 demand ventilation control is provided.
   f. Spaces such as gymnasiums and student dining shall be designed to control humidity in the space.
   g. Locker room supply air systems shall include energy recovery equipment as a means of preconditioning the air. The air handling units will include heating and cooling coils for additional ***space conditioning*** and dehumidification.
4. Kitchen Supply and Exhaust System
   a. Makeup air shall be supplied by an air handling system or dedicated makeup air unit. Air handling unit shall be located as close to the kitchen as possible. Location of the unit shall be in a dedicated mechanical room or mechanical deck, with exception that a dedicated gas-fired makeup air unit is permitted to be installed on the roof of the kitchen, for compensation of the kitchen hood exhaust system.
   b. Air handling systems serving the kitchen area shall serve areas directly related to kitchen and dining functions, and shall not serve other spaces such as classrooms or administrative areas. Serving an office which is part of the kitchen operation is acceptable.
   c. Refer to paragraph 8430.1.02.F.4 e and f for kitchen hood and dishwasher exhaust systems. System design shall comply with the Ohio Mechanical Code.

1.02 CENTRAL PLANT VARIABLE AIR VOLUME SYSTEM WITH HOT WATER REHEAT TERMINALS (cont'd)

d. Commercial kitchen Type I and Type II hood systems larger than 5,000 CFM shall have variable-speed control for exhaust and makeup air fans to reduce hood airflow rates at least 50 percent during those times when cooking is not occurring and the cooking appliances are up to temperature in a standby, ready to cook mode.

D. Ductwork Distribution Systems

1. Medium/High Pressure Supply Air Ductwork

a. Air shall be distributed from the variable volume air handling units to terminal units located above the ceiling through a medium/high pressure ductwork system. Air velocities should be a maximum of 3,000 feet per minute. The system must be analyzed for acoustical attenuation in the form of dual-walled ductwork or manufactured sound attenuators. It is recommended the medium/high pressure ductwork system be routed through corridors to reduce potential sound problems.

b. The HVAC Design Professional is required to evaluate the entire medium/high pressure ductwork system using an approved software program designated for this purpose. Examples of such programs include: United McGill's UNI-DUCT program, Trane's Varitrane program, or Tempmaster's AcuDuct program.

2. Variable Air Volume Reheat Terminal Units

a. Terminal units shall be located above the ceiling and shall control the flow of air to the space based on a space temperature sensor. Terminal units should be located within 2 feet of an accessible ceiling (where ceilings exist) to allow for maintenance.

b. On a rise in space temperature, the damper in the terminal unit will open and allow air from the medium/high pressure duct system into the space. As the space temperature falls, the damper will close to a minimum position as determined by the HVAC Design Professional. The minimum position shall be set to maintain the required ventilation rate in the space. On a continued fall in space temperature, the heating coil control valve at the terminal unit shall be opened to maintain space set point.

3. Low Pressure Supply Air Ductwork

a. Air is distributed from the variable volume terminal units to air devices located throughout the space via a low pressure ductwork system. The maximum air velocity in this part of the ductwork system should be 1,200 feet per minute. Air is also distributed from single zone air handling units to air devices via a low pressure ductwork system.

b. Supply air ductwork connections to ceiling-mounted air devices should be completed with flexible ductwork.

c. Air devices should be ceiling-mounted, wherever possible, to prevent damage by students. If spaces do not include ceilings, the air devices should be wall- or duct-mounted out of the reach of students.

d. Low temperature air systems (below 50 degrees Fahrenheit) require the use of special diffusers and air devices to prevent moisture accumulation.

e. Each low pressure duct leading to an air device should include a manual volume damper to balance the system.

1.02 CENTRAL PLANT VARIABLE AIR VOLUME SYSTEM WITH HOT WATER REHEAT TERMINALS (cont'd)

4. Return/Relief Air System for Variable Volume Air Handling Units

   a. The return air plenum on a variable volume system is the space between the ceiling and structure of the building. All materials inside the plenum area should be rated for this type of application to reduce smoke and fire potential.

   b. Return air is routed into the plenum through return grilles in the ceiling. Return air is pulled from the plenum by the supply air fan located in the air handling unit.

   c. Relief air shall be totally mechanically exhausted or by use of a combination of constant speed exhaust and a gravity relief system. Combination relief air exits the building through two paths. During normal operation, relief air is pulled back to the mechanical room by the relief air fan and exits the building through an energy recovery system. Roof-mounted gravity relief ventilators or exterior, wall-mounted louvers with backdraft dampers should be used as exit points for the relief air. During the economizer cycle, relief air exits the building through supplementary rooftop ventilators and wall louvers located around the building.

   d. The relief air fan of a combination relief system should be constant volume and sized to maintain a slight positive pressure in the space at minimum outside air conditions.

5. Return/Relief Air Systems for Single Zone Air Handling Units

   a. Return air is ducted back to the air handling unit versus using the return air plenum. It is recommended that return air devices be located near the floor for large rooms with high ceilings (gymnasiums, cafeterias, etc.)

   b. Relief air shall be totally mechanically exhausted or by use of a combination of ***variable*** speed exhaust and a gravity relief system. Combination relief air exits the building through two paths. During normal operation, relief air is pulled back to the mechanical room by the relief air fan and exits the building, ***maintaining building pressurization based on system outdoor air rate.*** Roof-mounted gravity relief ventilators or exterior, wall-mounted louvers with backdraft dampers should be used as exit points for the relief air. During the economizer cycle, relief air exits the building through supplementary rooftop ventilators and wall louvers located around the building.

   c. The relief air fan of a combination relief system shall be ***variable*** volume and sized to maintain a slight positive pressure in the space at minimum outside air conditions.

1.02 CENTRAL PLANT VARIABLE AIR VOLUME SYSTEM WITH HOT WATER REHEAT TERMINALS (cont'd)

E. Ventilation Air Systems

1. There are two paths for outside air entering the air handling units.
   a. The minimum outside air required for ventilation enters the building through exterior wall louvers or roof-mounted ventilators near the air handling unit and immediately passes through a heat recovery system. The tempered air then enters the return air ductwork just before the air handling unit mixing box.
   b. During the economizer cycle, 100 percent of the air passing through the air handling unit enters the mixing box through a direct duct connection to exterior louvers or roof-mounted ventilators. Economizer air does not pass through the heat recovery system.

F. Exhaust Air Systems

1. General exhaust systems shall be located throughout the building to exhaust restrooms, electrical rooms, mechanical rooms, custodial closets, and storage rooms.

2. Roof-mounted fans shall be utilized wherever "low profile" roofs are located.

3. In-line or deck-mounted utility fans should be used to avoid penetration of sloped roof structures. In-line fans should not be located over sound sensitive areas such as classrooms, media centers, conference rooms, etc. Fans shall be installed within 2 feet of an accessible ceiling (where ceilings exist) to allow for maintenance.

4. Special Exhaust Systems
   a. Science and art rooms require general exhaust systems in addition to a supply/return air system to remove odors associated with experiments, paint, and chemicals. These exhaust systems shall be manually controlled using spring-wound timer switches within the space and not through the temperature control system. Exhaust requirements in these applications shall be such to create a slight negative pressure in the room and contain the odors to one classroom or lab. Makeup air for exhaust will be drawn from the building return air plenum.
   b. Fume hood exhaust systems shall be installed at all fume hood locations. Each fume hood shall be exhausted with its own exhaust fan. Exhaust fans for fume hoods shall be roof-mounted, wherever possible, or as close to the perimeter of the building as possible, if installed as an in-line or utility fan. ***Ductwork shall be stainless steel or epoxy coated steel rated for the products in the exhaust air. The location of the fume hood exhaust and intake air shall be closely reviewed during design.***
   c. Kiln systems shall include a dedicated exhaust system to remove heat. Control of the exhaust fan shall be based on a rise in space temperature.

1.02 CENTRAL PLANT VARIABLE AIR VOLUME SYSTEM WITH HOT WATER REHEAT TERMINALS (cont'd)

d. Technology education systems require dedicated dust collection systems with exterior cyclone units and interior after-filter units. Dust collection system shall include floor sweeps and individual connection to dust generating equipment such as table saws, planers, jointers, etc. Special welding exhaust systems may be required if welding stations are provided. Welding exhaust should be completely separate from any dust collection exhaust system and should be connected directly to exterior wall louvers or rooftop ventilators.

e. Kitchen canopy systems shall be provided over kitchen cooking equipment where required by applicable codes. Kitchen canopies shall include exhaust and makeup air as required by code. Variable speed and time controls for exhaust hoods are recommended. They are to utilize a system with temperature and optical sensors to determine ventilation requirements based on exhaust temperature and smoke content.

f. Dishwasher exhaust shall be designed by the HVAC Design Professional to meet the requirements set forth by the Food Service Design Professional and will result in either a direct-connected system or an overhead exhaust hood arrangement.

5. Locker Room Exhaust Systems

a. Locker room spaces shall be exhausted independently from the building general exhaust systems. The quantity of exhaust shall be designed by the HVAC Design Professional to meet the minimum code requirements, but shall not be less than 1.5 cubic feet per minute per square foot in quantity.

b. The exhaust shall be grouped from specific spaces, such as male locker rooms or female locker rooms, and shall be routed through an energy recovery system in order to obtain usable energy from the exhausted air for use in preconditioning the supply air in the same locker room spaces.

G. Supplemental Heat Systems

1. Cabinet unit heaters shall be ceiling recessed versus wall mounted. The only acceptable use of a wall-mounted unit would be in an open roof structure design as developed by the HVAC Design Professional.
2. Propeller unit heaters shall be used for supplementary heat in mechanical rooms, shop areas, receiving, etc
3. Fintube/radiant ceiling panel heating shall be used to provide heat for large, exterior exposures. Radiant ceiling panels shall not be used where ceiling heights exceed 12 feet. The HVAC Design Professional should avoid the use of fintube in all applications where damage or vandalism is widespread.
4. Miscellaneous heat sources throughout the building may be required and should be evaluated on a case-by-case basis by the HVAC Design Professional.
5. ***Electric resistance heating is discouraged from use when other fuel sources or heating medium (heating water) are readily available.***

1.02 CENTRAL PLANT VARIABLE AIR VOLUME SYSTEM WITH HOT WATER REHEAT TERMINALS (cont'd)

H. Electronic Temperature Control System

1. The building shall be split into different zones according to air systems, exterior exposure, and general occupied schedules. Example: Administration areas shall be a separate zone; classrooms with southern exposure shall be a separate zone from classrooms with northern exposure, etc.

2. Each occupied space in the building shall include space temperature control.

3. Zones shall be placed into occupied/unoccupied mode through the temperature control computer.

4. Variable volume air handling units shall provide air to match a discharge air temperature set point from the temperature control computer. Small, direct-expansion cooling systems shall be controlled from a return air set point in lieu of discharge air set point.

5. Single zone air handling units shall be controlled from a space-mounted temperature sensor. Space-mounted or return air humidity sensors shall be included in the event reheat is included for humidity control of gymnasiums and student dining. A return duct CO_2 sensor shall be provided for large single zone variable occupancy systems utilizing demand ventilation control.

6. Through the temperature control system, it shall be possible to reset the space temperature sensors to a night setback temperature of 55 degrees Fahrenheit for heating ***and 85 degrees Fahrenheit for cooling*** to reduce energy consumption.

7. During unoccupied hours, air handling units shall cycle only as required to maintain night setback temperatures.

8. Dry-Bulb controlled economizer for the building shall be controlled globally from the main temperature control computer. As the dry-bulb temperature of the return air rises above the dry-bulb temperature of the outside air, the entire building shall be placed into economizer mode. Return air temperature sensors shall be included for each air handling unit. Provide an outside air enthalpy high limit to end the economizer cycle if the outside air enthalpy exceeds the limit set point. Differential enthalpy economizer shall also be acceptable.

9. Graphic screens shall be included for each air handling unit, boiler plant, cooling plant, variable air volume terminal unit, and floor plan.

10. The heating water pumping system shall be enabled when ambient temperatures drop below 50 degrees Fahrenheit during unoccupied hours and 55 to 70 degrees Fahrenheit during occupied hours. Design Professional is to determine the occupied setpoint based on thermal balance. Boilers shall maintain water temperature while the pumping system is enabled. It is recommended with multiple boiler arrangements that a flow measuring device is used in conjunction with supply and return temperature sensors to calculate system Btu/h required and to then stage the boilers accordingly.

1.02 CENTRAL PLANT VARIABLE AIR VOLUME SYSTEM WITH HOT WATER REHEAT TERMINALS (cont'd)

11. The chilled water pumping system shall be enabled when ambient temperatures rise above ***50*** degrees Fahrenheit during occupied hours ***or*** when the building relative humidity rises above 60. Chillers shall maintain water temperature while the pumping system is enabled. Systems will shut down ***during unoccupied hours*** when the relative humidity falls below 60%.

12. The temperature control system shall prevent the return water temperature from dropping below the required temperature allowable at the boilers.

13. All air handling units shall be controlled to cycle during unoccupied hours in order to prevent space relative humidity in excess of ***60*** percent. Systems will shutdown when the relative humidity falls below ***50 percent.***

1.03 CENTRAL PLANT VARIABLE AIR VOLUME SYSTEM WITH FAN-POWERED REHEAT TERMINALS

A. Central Heating Plant
   1. Reference"Central Plant Variable Air Volume System with Hot Water Reheat Terminals"

B. Central Cooling Plant
   1. Reference "Central Plant Variable Air Volume System with Hot Water Reheat Terminals"

C. Air Systems
   1. Variable Volume Air Handling Units
      a. Reference "Central Plant Variable Air Volume System with Hot Water Reheat Terminals"

   2. Single Zone Variable Volume Air Handling Units
      a. Reference "Central Plant Variable Air Volume System with Hot Water Reheat Terminals"

D. Ductwork Distribution Systems
   1. Medium/High Pressure Supply Air Ductwork
      a. Reference "Central Plant Variable Air Volume System with Hot Water Reheat Terminals"

   2. Variable Air Volume Fan-Powered Reheat Terminal Units.
      a. Terminal units shall be located above the ceiling and shall control the flow of air to the space based on a space temperature sensor. Terminal units should be located within 2 feet of an accessible ceiling (where ceilings exist) to allow for maintenance.
      b. Each terminal unit shall include a fan and a supply air valve oriented in series. The fans shall operate continuously while the space is in occupied mode.

1.03 CENTRAL PLANT VARIABLE AIR VOLUME SYSTEM WITH FAN-POWERED REHEAT TERMINALS (cont'd)

c. On a rise in space temperature, the damper in the terminal unit will open and allow air from the medium/high pressure duct system into the terminal fan. As the space temperature falls, the damper will close to a minimum position as determined by the HVAC Design Professional. The minimum position shall be set to maintain the required ventilation rate in the space. By reducing the amount of air available from the air handling unit, the terminal fan induces more air from the plenum space. The heat generated by lights is used to reheat the supply air. On a continued fall in space temperature, the heating coil control valve at the terminal unit shall be opened to maintain space set point.

Series Fan Powered VAV Schematic
Figure C-1

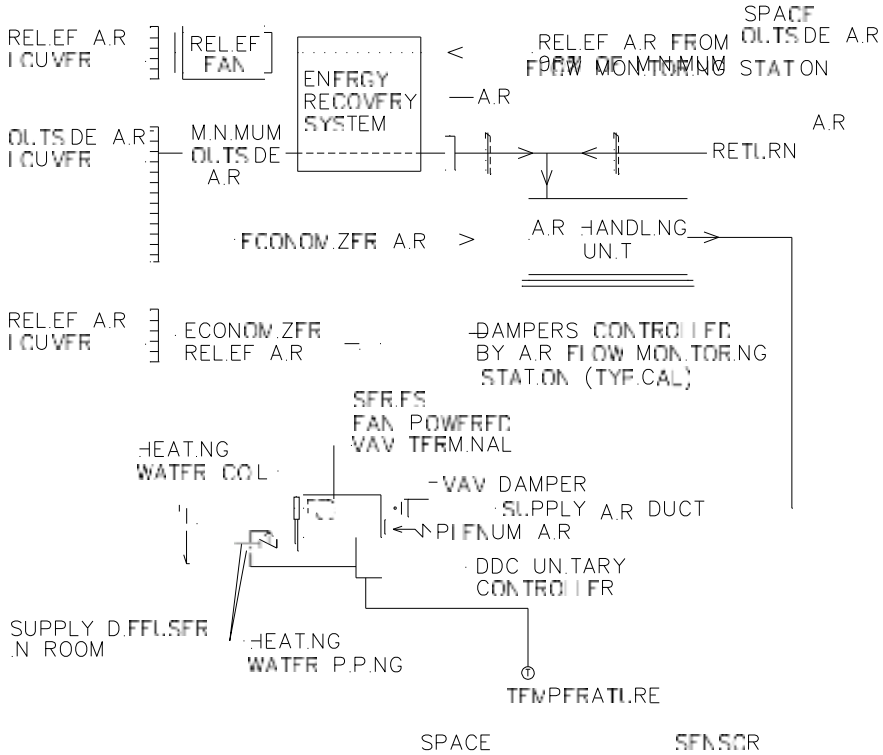

3. Low Pressure Supply Air Ductwork
   a. Reference "Central Plant Variable Air Volume System with Hot Water Reheat Terminals"

4. Return/Relief Air System for Variable Volume Air Handling Units
   a. Reference "Central Plant Variable Air Volume System with Hot Water Reheat Terminals"

5. Return/Relief Air Systems for Single Zone Constant Volume/Variable Temperature Air Handling Units
   a. Reference "Central Plant Variable Air Volume System with Hot Water Reheat Terminals"

1.03 CENTRAL PLANT VARIABLE AIR VOLUME SYSTEM WITH FAN-POWERED REHEAT TERMINALS (cont'd)

E. Ventilation Air Systems

1. Reference "Central Plant Variable Air Volume System with Hot Water Reheat Terminals"

F. Exhaust Air Systems

1. Reference "Central Plant Variable Air Volume System with Hot Water Reheat Terminals"

G. Supplemental Heat Systems

1. Reference "Central Plant Variable Air Volume System with Hot Water Reheat Terminals"

H. Electronic Temperature Control System

1. The building shall be split into different zones according to air systems, exterior exposure, and general occupied schedules. Example: Administration areas shall be a separate zone; classrooms with southern exposure shall be a separate zone from classrooms with northern exposure, etc.

2. Each occupied space in the building shall include space temperature control.

3. Zones shall be placed into occupied/unoccupied mode through the temperature control computer.

4. Variable volume air handling units shall provide air to match a discharge air temperature set point from the temperature control computer. Small, direct-expansion cooling systems shall be controlled from a return air set point in lieu of discharge air set point.

5. Single zone air handling units shall be controlled from a space-mounted temperature sensor. Space-mounted or return air humidity sensors shall be included in the event reheat is included for humidity control of gymnasiums and student dining. A return duct CO_2 sensor shall be provided for large single zone variable occupancy systems utilizing demand ventilation control.

6. Through the temperature control system, it shall be possible to reset the space temperature sensors to a night setback temperature of 55 degrees Fahrenheit for heating to reduce energy consumption.

7. During unoccupied hours, the variable volume terminal fans shall cycle as required to maintain night setback temperatures.

1.03 CENTRAL PLANT VARIABLE AIR VOLUME SYSTEM WITH FAN-POWERED REHEAT TERMINALS (cont'd)

8. Dry-Bulb controlled economizer for the building shall be controlled globally from the main temperature control computer. As the dry-bulb temperature of the building return air rises above the dry-bulb temperature of the outside air, the entire building shall be placed into economizer mode. Return air temperature sensors shall be included for each air handling unit. Provide an outside air enthalpy high limit to end the economizer cycle if the outside air enthalpy exceeds the limit set point.

9. Graphic screens shall be included for each air handling unit, boiler plant, cooling plant, VAV terminal unit, and floor plan.

10. Reference "Central Plant Variable Air Volume System with Hot Water Reheat Terminals" for additional temperature control requirements.

1.04 WATER-SOURCE HEAT PUMP SYSTEM

A. Central Heat Rejection System

1. Cooling Tower or Fluid Cooler***: Induced draft (Cross-flow) or Forced draft (Counter-flow)***

a. Cooling towers shall be located at the rear of the building or on the roof. If roof mounting is selected, vibration isolation methods must be utilized. Coordinate final location of cooling tower with any outside air intake louvers. Tower shall be no closer than 30 feet from the nearest intake louver.

b. Cooling towers shall be sized to maintain heat pump condenser water temperatures during a design day with ambient wet-bulb temperatures equal to the 2 1/2 percent design wet-bulb value. This value is different than the Mean Coincident wet-bulb value.

c. Cooling tower water temperatures shall be selected with the heat pump condenser water temperature to obtain maximum efficiency.

d. Capacity reduction methods for cooling towers, such as multiple fans, 2-speed fans, variable frequency drives, inlet dampers, mixing valves, or dump valves, shall be used to maintain tower water temperature during partial load conditions. If a variable frequency drive is used on the cooling tower fan, an interlock wire between the remote disconnect and the VFD shall be installed to shut down the drive if the disconnect is turned off.

e. A remote tank capable of holding the water for the cooling tower system shall be provided below the cooling tower level within a tempered space. If a remote tank is not possible, heat tracing must be provided for all piping exposed to freezing weather and the sump of the cooling tower.

f. The cooling tower water circulation pumps shall be sized to maintain the design water flow through the cooling tower system. All pump components shall be suitable for cooling tower systems.

g. The cooling tower water treatment system shall include a makeup water connection through a back-flow preventer and shall be automatic to prevent scaling, corrosion, and bacterial growth.

1.04 WATER-SOURCE HEAT PUMP SYSTEM (cont'd)

h. The cooling tower water system shall be separated from the heat pump condenser water system by a plate and frame heat exchanger.

2. Hybrid Closed-Loop Geo-thermal borefield

a. A life cycle cost analysis shall be submitted for approval by the Ohio Facilities Construction Commission. The life cycle cost analysis shall include any extra site acquisition costs and a site variance request (if applicable). Life cycle cost shall be compared with AHSRAE 90.1***(most recent as adopted by OBC or USGBC)*** appendix G for the various systems.

b. Borefield shall be a hybrid design, sized to handle the less-dpminant load between heating and cooling. Supplemental heating (boiler) or cooling (tower or fluid cooler) shall be included to handle peak loads above the capability of the borefield. It is not the intent for the system to include both supplemental heating and cooling.

c. Design Professional shall utilize computer simulation sizing software to determine the quantity of bores.

d. Design Professional shall make adequate provisions for freeze protection based on design water temperatures. Propylene glycol should be considered for heating design values below 40°F.

e. Refer to 1.04 Paragraph K for additional guidelines.

B. Central Heat Absorption

1. Heating Water Boilers

a. A minimum of 2 heating water boilers shall be provided.
   1) Gas-fired, forced draft boiler
   2) Gas-fired, atmospheric boiler
   3) Fuel oil boiler
   4) Dual-fuel (fuel oil and gas) boiler
   5) Electric boiler
   6) Gas-fired, High efficient, forced draft boiler

b. A combustion air system for each boiler shall be installed to meet the intent of the code. The HVAC Design Professional must provide a means for preheating the incoming air or maintaining a minimum of 55 degrees Fahrenheit within the boiler room area. Control of the dampers shall be through the direct digital control system and will include dampers and control for the water heater system.

2. Hybrid Closed-loop Geo-thermal borefield

a. A life cycle cost analysis shall be submitted for approval by the Ohio Facilities Construction Commission. The life cycle cost analysis shall include any extra site acquisition costs and a site variance request (if applicable). Life cycle cost shall be compared with AHSRAE 90.1(most recent as adopted by OBC or USGBC) appendix G for the various systems.

b. Borefield shall be sized to handle the less-dominant load between heating and cooling. Supplemental heating (boiler) or cooling (tower or fluid cooler) shall be included to handle peak loads above the capability of the borefield.

1.04 WATER-SOURCE HEAT PUMP SYSTEM (cont'd)

c. Design Professional shall utilize computer simulation sizing software to determine the quantity of bores.

d. Design Professional shall make adequate provisions for freeze protection based on design water temperatures. Propylene glycol should be considered for heating design values below 40°F.

e. Refer to 1.04, Paragraph K for additional guidelines.

3. Total heating capacity shall be approximately 130 percent of the building design load minus the total heat pump heat of compression plus the heat loss of the exterior closed loop fluid cooler (where applicable.)

C. Heat Pump Condenser Water Circulation System

1. Temperature of the heat pump condenser water loop shall range between 60 degrees Fahrenheit and 90 degrees Fahrenheit. An exception to this noted range would be loop temperatures as low as 35 degrees Fahrenheit for ground-source water systems. Below 40 degrees Fahrenheit design water temperature, a glycol solution shall be specified to protect the equipment. Design professional must verify that equipment is designed to and rated for the condenser water loop temperature.

2. Heat shall be introduced to the heat pump condenser water loop using a three-way temperature control valve connection to the supplementary heating loop.

3. The heat pump condenser water distribution system shall make use of a reverse return or direct return piping arrangement. Direct return systems shall use automatic flow controllers for water balancing.

4. A minimum of 2 pumps shall be used for water circulation to the building heat pump condensers. It is recommended to use 2 pumps, each sized ***between 50-75*** percent of the total system flow ***at 100 percent design*** pressure.
   a. A parallel pumping configuration is required.
   b. The heat pump condenser water circulation system shall be capable of a minimum 50 percent flow reduction through the use of two-way control valves, three-way control valves, and constant speed pumps, or by the use of two-way control valves and variable speed pumps.

5. Variable frequency drives should be investigated for energy-saving potential on any heat pump condenser water distribution system with the use of modulating control valves at each heat pump. The HVAC Design Professional shall evaluate "fouling" of the condenser coils due to low flows in the heat pumps as part of the variable speed investigation.

6. Air removal and/or containment methods are required on closed loop applications.
   a. Expansion tanks
   b. Air separators
   c. Air vent

1.04 WATER-SOURCE HEAT PUMP SYSTEM (cont'd)

7. Each closed loop system shall be provided with a manual chemical water treatment system to prevent corrosion and scaling in the heat pump condenser water system. A side-flow filtration system will be required for the heat pump tower water loop system and should be located in the boiler room for de-coupled, open tower applications.

D. Supplementary Heating Water Circulation System

1. Supplementary heating water loop shall be designed to provide heat to all supplementary heating units as well as provide backup heat to the heat pump condenser water circulation system.

2. Design water supply temperatures shall 180 degrees Fahrenheit with morning warm-up reset up 20 degrees Fahrenheit to a maximum of 190 degrees Fahrenheit. High efficiency boilers that are rated for condensing may operate at a reduced supply water temperature of 130 degrees Fahrenheit to 160 degrees Fahrenheit.

3. The supplementary heat distribution system is separate from the heat pump condenser water system and should make use of a direct return piping arrangement.

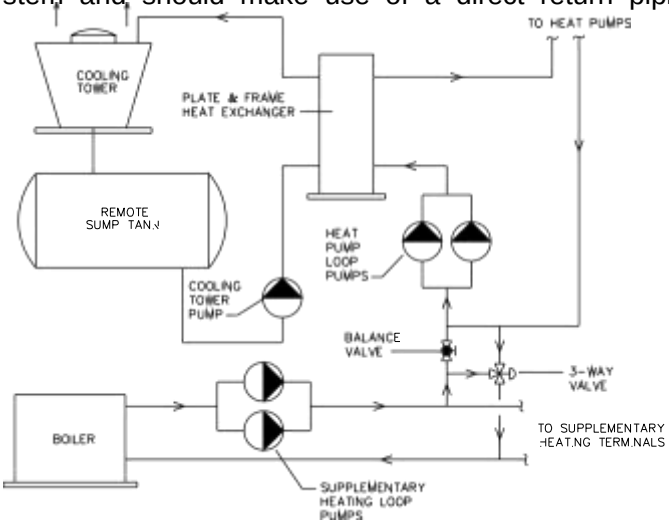

Water Source Heat Pump Schematic

(open tower)

Figure E-1

4. A minimum of 2 pumps shall be used for the supplementary water circulation system. It is recommended to use 2 pumps, each sized at 100 percent of the total system flow and pressure up to 300 gallons per minute. For total system flows above 300 gallons per minute or 10 brake horsepower, each pump should be sized for 50 percent of the total flow and 100 percent of the required pressure.
   a. A parallel pumping configuration is required.

5. A separate air removal and/or containment method is required on the supplementary heating water circulation system. ***The HVAC Professional may utilize the expansion tanks for heat pump condenser water circulation system provided that the tanks are sizes for the combined system volume and temperature range.***

1.04 WATER-SOURCE HEAT PUMP SYSTEM (cont'd)

a. Expansion tanks
b. Air separators
c. Air vent

6. Chemical treatment of the supplementary heating water system is not required due to mixing available through the three-way valve connection to the heat pump condenser water distribution system.

Water Source Heat Pump Schematic

(closed circuit fluid cooler)
Figure E-2

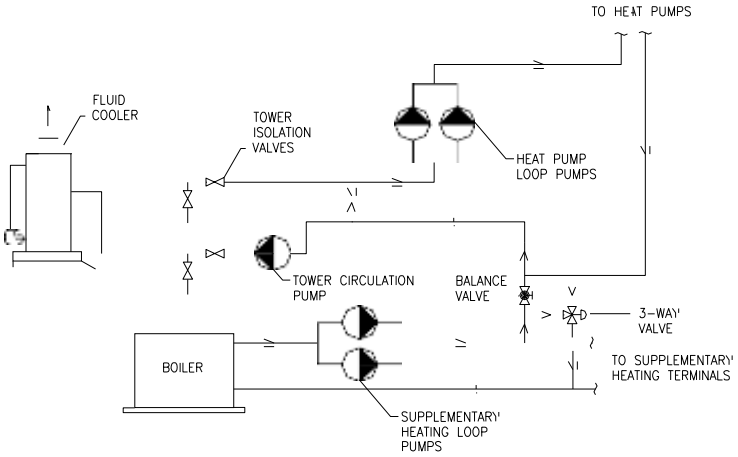

Geothermal Heat Pump Schematic

(closed circuit geothermal)
Figure E-3

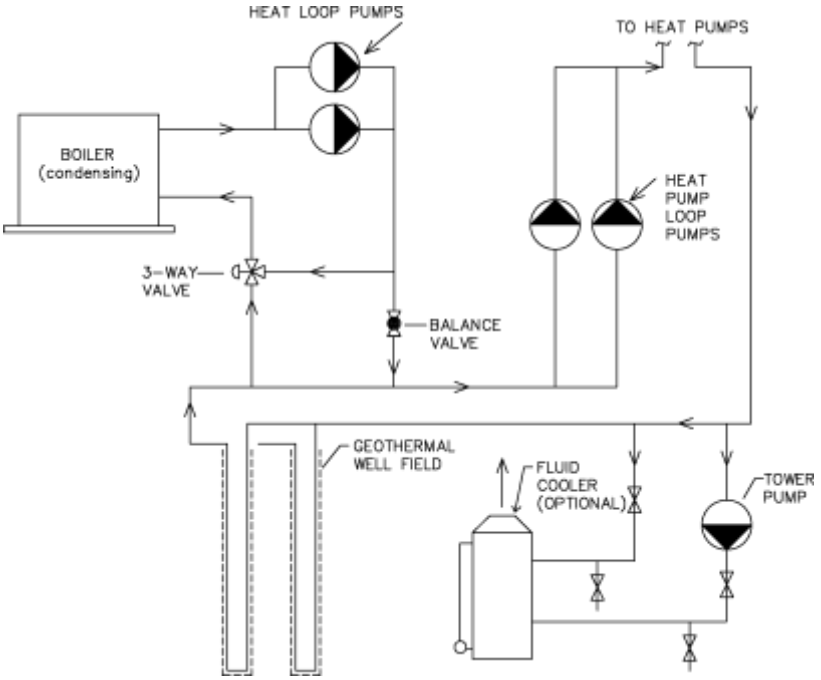

1.04 WATER-SOURCE HEAT PUMP SYSTEM (cont'd)

E. Ventilation Air System

1. 100 Percent Outside Air Handling Units

a. Locations of air handling units can be dedicated mechanical rooms or mechanical decks. Air handling units may not be located exterior to the building.

b. Each air handling unit shall include the following components as a minimum: supply air fan, cooling coil, heat recovery ***module,*** heating coil, and filters.

c. Ventilation air temperature distributed to the space being served shall have discharge air temperature reset schedule determined by the Design Professional for occupant comfort and energy savings. The unit shall be capable of dehumidification and reheat to maintain ***space absolute humidity below*** 65 grains of moisture per lb of dry air. The reheat shall be provided by an energy recovery method such as Hot Gas Reheat, Sensible Energy Recovery Wheel, or Heat Pipe System. Humidification in the winter is not required.

d. Energy recovery methods such as desiccant wheels shall be included to precondition the outside air. The energy recovery method selected by the HVAC Design Professional must include latent heat recovery as well as sensible heat recovery.

e. An outdoor, air-cooled condensing unit piped to a refrigeration coil in each air handling unit will be provided with the equipment or located as near the mechanical unit as possible and shall be controlled through the direct digital control system. Or as part of a packaged, indoor ventilation make-up air unit, the condenser may be water cooled and the unit may have an integral hot gas reheat coil.

f. The ventilation unit is to dehumidify the ventilation air to the level indicated in item c., above. Ventilation air dehumidification is not to be handled at the terminal heat pump level.

g. A return/recirculation damper shall be located in the air handler to allow unit operation during morning warm-up/cool-down. Unit shall revert back to 100 percent outside air operation when building enters occupied mode.

1.04 WATER-SOURCE HEAT PUMP SYSTEM (cont'd)

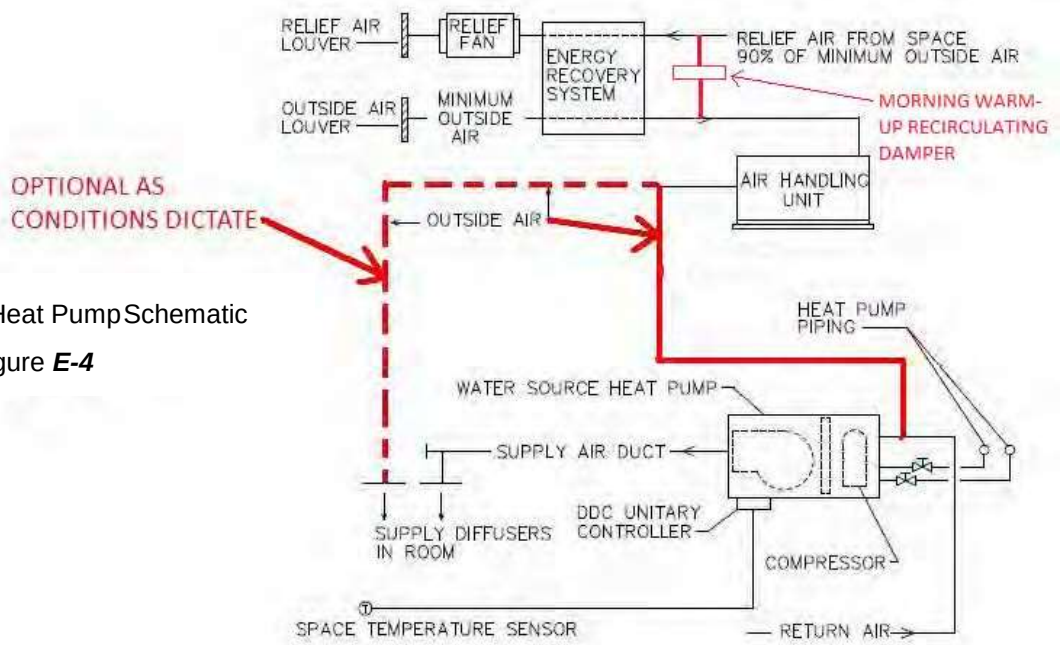

Water Source Heat Pump Schematic

Figure ***E-4***

2. Dual Technology 100 Percent Outside Air Handling Units
   a. Unit shall be configured similar to that described in a. above. However, shall incorporate both a total enthalpy energy wheel and a desiccant dehumidification wheel. The capacity of the Desiccant wheel shall be controlled by either space or return air humidistat modulating face and by-pass dampers at the desiccant wheel.
   b. Desiccant regeneration air shall be pulled from the exhaust air stream and shall be heated by gas or electric source.

F. Ductwork Distribution Systems
   1. Ventilation Air Ductwork
      a. Ventilation air is distributed from the air handling units to the classroom via a low pressure ductwork system. The maximum air velocity in this part of the ductwork system should be 1,200 feet per minute. ***Design Professional may consider Medium Pressure ductwork with cooling-only variable volume terminal units when Demand Control Ventilation strategies are incorporated. Reference "Central Plant Variable Volume System with Hot Water Reheat Terminals."***
      b. Ventilation air ductwork ***shall be introduced either directly to the space or to the return air path of the terminal heat pump.*** Do not introduce ventilation air directly to plenum space above the ceiling. In some cases, ventilation must be connected directly to the space being served (i.e. ventilation airflow required higher than terminal airflow required). The control sequence for building operation shall require the startup of all heat pump fans prior to the startup of the main ventilation fans for prevention of reverse fan operation of the heat pump units.

1.04 WATER-SOURCE HEAT PUMP SYSTEM (cont'd)

2. Classroom Water-Source Heat Pumps
   a. Heat pumps shall be located above accessible corridor ceilings, arranged together on a mechanical deck or other appropriate locations to minimize noise. Units will not be permitted over the classroom ceilings due to difficulty in servicing and associated noise. Refer to LEED for Schools noise requirements.
   b. Heat pumps shall be sized as required to maintain temperature throughout the space. Condenser water temperature will affect the selections of other equipment and should be coordinated by the HVAC Design Professional.
   c. Heat pump supply fans shall run continuously during occupied hours.
   d. Condensate piping shall be routed from each heat pump to an acceptable discharge location such as a custodial sink, floor drain, or exterior to the building. Condensate piping located within the plenum shall be suitable for plenum use. ***Design Professional shall consider condensate reclaim as prescribed in ASHRAE Standard 189.1 for systems greater than 65,000 Btu/h.***

3. Activity Spaces
   a. Spaces such as gymnasiums, student dining, and media centers shall be conditioned using heat pump units. These units will require placement on an adjacent mechanical deck.
   b. Heat pumps shall be sized as required to maintain temperature throughout the space.
   c. Heat pump supply fans shall run continuously during occupied hours.
   d. Condensate piping shall be routed from each heat pump to an open site floor drain located on the mechanical deck.

4. Low Pressure Duct Distribution System
   a. Air is distributed from the heat pump units to air devices located throughout the space via a low pressure ductwork system. The maximum air velocity in this part of the ductwork system should be 1,200 feet per minute.
   b. Supply air ductwork connections to ceiling-mounted air devices should be completed with flexible ductwork.
   c. Air devices should be ceiling mounted, wherever possible, to prevent damage by students. If spaces do not include ceilings, the air devices should be wall- or duct-mounted out of the reach of students.
   d. Each low pressure duct leading to an air device should include a manual volume damper to balance the system.

5. Return/Relief Air System
   a. The return air plenum for a water source heat pump system is the space between the ceiling and structure of the building. All materials inside the plenum area should be rated for this type of application to reduce smoke and fire potential.
   b. Return air is routed into the plenum through return grilles in the ceiling. Return air is induced from the plenum by the supply fan of the individual heat pumps.

1.04 WATER-SOURCE HEAT PUMP SYSTEM (cont'd)

c. Relief air is pulled back to the mechanical room by the relief air fan and exits the building through an energy recovery system. Roof-mounted gravity relief ventilators, or exterior, wall-mounted louvers with backdraft dampers should be used as exit points for the relief air.

d. The relief air fan should be sized to maintain a slight positive pressure in the space.

G. Exhaust Systems

1. Reference "Central Plant Variable Air Volume System with Hot Water Reheat Terminals"

2. Exhaust rates for Art Room, Science Labs and Life Skills Lab shall be established at 125 percent of the primary supply air rate for the space, but not less than required by state and local building codes. Adjustments shall be incorporated into the sequences of operation to decrease relief air whenever the local space exhaust is energized.

H. Supplemental Heat Systems

1. Reference "Central Plant Variable Air Volume System with Hot Water Reheat Terminals"

I. Electronic Temperature Control System

1. The building shall be split into different zones according to exterior exposure and general occupied schedules. For example: Administration areas shall be a separate zone; classrooms with southern exposure shall be a separate zone from classrooms with northern exposure, etc.

2. Each occupied space in the building shall include space temperature control.

3. Zones shall be placed into occupied/unoccupied mode by the temperature control computer.

4. Through the temperature control system, it shall be possible to reset the space temperature sensors to a night setback temperature of 55 degrees Fahrenheit to reduce energy consumption for heating applications.

5. During unoccupied hours, all heat pump units shall cycle as required to maintain night setback temperatures.

6. Graphic screens shall be included for each ventilation air handling unit, boiler plant, cooling tower, circulation pumps, heat exchanger, heat pump terminal unit, and floor plan.

7. The supplementary heating water pumping system shall be enabled when ambient temperatures are below system set points; for example, 40 degrees Fahrenheit during unoccupied hours and 55 to 70 degrees Fahrenheit during occupied hours. Engineer is to determine the occupied setpoint based on thermal balance. Boilers shall maintain water temperature while the pumping system is enabled.

1.04 WATER-SOURCE HEAT PUMP SYSTEM (cont'd)

8. The heat pump water circulation system shall be enabled continuously during occupied hours and when any heat pump is operational during unoccupied hours.

9. All heat pumps shall be controlled to cycle during unoccupied hours in order to prevent space relative humidity in excess of 65 percent.

J. Kitchen Supply and Exhaust System:

1. Make-up air shall be supplied by an air handling system or dedicated makeup air unit. Air handling unit shall be located as close to the kitchen as possible. Location of the unit shall be in a dedicated mechanical room or mechanical deck with exception that a dedicated gas-fired makeup air unit is permitted to be installed on the roof of the kitchen, for compensation of the kitchen hood exhaust system.

2. Air handling systems serving the kitchen area shall serve areas directly related to kitchen and dining functions, and shall not serve other spaces such as classrooms or administrative areas. Serving an office which is part of the kitchen operation is acceptable.

3. Refer to Paragraph 8430.1.02.f.4 e and f for kitchen hood and dishwasher exhaust systems. System design shall comply with the Ohio Mechanical Code.

4. Commercial kitchen Type I and Type II hood systems larger than 5,000 cfm shall have variable-speed control for exhaust and makeup air fans to reduce hood airflow rates at least 50 percent during those times when cooking appliances are up to temperature in a standby, ready to cook mode.

K. Closed-Loop Geothermal Well Piping System:

1. System must be validated by a life cycle cost energy model and project budget before proceeding with this type of system.

2. Design shall be in conformance with current Closed-Loop/Geothermal Heat Pump Standard from IGSHPA (International Ground Source Heat Pump Association).

3. Project shall have a minimum of two (2) test wells completed to evaluate geological conditions, thermal conductivity and thermal diffusivity in the well field during design. Testing shall comply with IGSHPA standard 1B "Design Method and Compliance" current edition with a written report.

4. All HDPE piping materials and heat-fused materials shall be manufactured from a virgin polyethylene extrusion compound material in accordance with ASTM-2513, Sections 4.1 and 4.2. Pipe shall be manufactured to outside diameters, wall thickness, and respective tolerances as specified in ASTM D-3035 or D-2447. Bore hole piping shall be a minimum of SDR11. U-Bend shall be closely evaluated during design and be constructed of heavy wall SDR9 minimum.

1.04 WATER-SOURCE HEAT PUMP SYSTEM (cont'd)

5. All connections shall be made using heat fusion in compliance with IGSHPA standard 1D "Pipe Joining Methods". Piping must be pressure tested before it is installed in the well.

6. Pressure grout the entire well using a pressure pump and tremie pipe, working from the bottom up. Grout material shall be thermally enhanced bentonite grout with a thermal conductivity value of 1.0.

7. Designer should evaluate if glycol is required for the design during the winter months.

8. Design shall comply with all EPA requirements and standards.

9. System shall be flushed and cleaned per OSDM section 23 25 00 HVAC Water Treatment. Piping shall remain capped during installation to prevent debris from entering the piping.

10. Geothermal field shall have electronic pipe markers. Electronic pipe markers shall be 4" diameter high-density polyethylene sphere type marker. A marker locator shall be provided with the electronic pipe markers and shall be capable of sensing the pipe markers up to minimum five feet underground. The mark locator shall include an electronics package and lightweight hand held probe. All horizontal geothermal piping shall have line marker tape with a tracer wire.

1.05 SUPPLEMENTAL COOLING SYSTEMS

A. General – Supplemental cooling systems are for dedicated loads that require cooling outside the general requirements of the building in general, and thus impractical to be included as part of the central main cooling systems. Further, these loads are generally small and cooling is required year-around. These loads are best handled using direct expansion (Dx) systems.

B. System Design:

1. Systems shall be dedicated to the load served and be controlled by its own thermostat.

2. The unit shall be located indoors with exception that the condensing unit or condenser may be outdoors. Packaged indoor units with supply and exhaust air directed outdoors is also acceptable.

3. Units shall not be located over electronic equipment, or computers, or as prohibited by the Code.

C. Applications:

1. Main Control/Equipment Room.
2. Elevator equipment room.
3. Remote offices – if an office is located in an otherwise un-air-conditioned part of the building such as an office in the area of the locker rooms, or a maintenance office adjacent to the boiler room.
4. Administration areas.

1.05 SUPPLEMENTAL COOLING SYSTEMS (cont'd)

D. Design Requirements and Limitations:

1. Systems shall have low ambient operation to ***0*** deg. F or be provided with a full, outside air economizer.

2. Units serving widely varying loads shall have hot gas bypass and a head pressure control system.

3. Suction and hot gas lines shall be insulated on all piping exterior to the unit.

4. Liquid lines shall be insulated if they run through attics or other areas where the ambient temperature may elevate above the outdoor temperature.

5. Administrative Area – The main administrative area of a school which is determined to have significantly different operating hours than the remainder of the school shall be permitted to have a Dx cooling system in lieu of being served by the central chilled water plant. All of the following criteria must be met:
   a. The design day cooling load of the administrative unit (zone) is less than 10% of the total building cooling load.
   b. The administration area can be served by one air handling unit.
   c. The total cooling capacity of the unit does not exceed 15 tons (180 MBH).
   d. The central chiller water plant is not intended to run in the summer (except for unoccupied operation and humidity control).

1.06 CENTRAL PLANT WITH UNDERFLOOR AIR VENTILATION SYSTEMS

A. Central Heating Plant

1. Reference "Central Plant Variable Air Volume System with Hot Water Reheat Terminals"

B. Central Cooling Plant

1. Reference "Central Plant Variable Air Volume System with Hot Water Reheat Terminals"

C. Air Systems

1. Variable Volume Air Handling Units
   a. Reference "Central Plant Variable Air Volume System with Hot Water Reheat Terminals"
   b. Air handling system design for underfloor air distributions shall follow the recommendations as outlined in the Underfloor Air Distribution (UFAD) Design Guide (RP-1064) published by ASHRAE. Air handling system design for displacement ventilation systems shall follow the recommendations as outlined in the System Performance Evaluation and Design Guidelines for Displacement Ventilation (RP-949) published by ASHRAE.

1.06 CENTRAL PLANT WITH UNDERFLOOR AIR VENTILATION SYSTEMS (cont'd)

2. Single Zone Variable Volume Air Handling Units
   a. Reference "Central Plant Variable Air Volume System with Hot Water Reheat Terminals"
   b. Air handling system design for underfloor air distributions shall follow the recommendations as outlined in the Underfloor Air Distribution (UFAD) Design Guide (RP-1064) published by ASHRAE. Air handling system design for displacement ventilation systems shall follow the recommendations as outlined in the System Performance Evaluation and Design Guidelines for Displacement Ventilation (RP-949) published by ASHRAE.

D. Ductwork Distribution Systems

1. Medium/High Pressure Supply Air Ductwork
   a. Reference "Central Plant Variable Air Volume System with Hot Water Reheat Terminals"

2. UFAD Exterior Zone Variable Air Volume Fan-Powered Reheat Terminal Units.
   a. Terminal units shall be located below the raised floor and shall control the flow of air to the space based on a space temperature sensor. Terminal units should be located for easy access to allow for maintenance.

   b. Each terminal unit shall include a fan and a supply air valve oriented in series. The fans shall operate continuously while the space is in heating mode. Refer to Figure I-2.

   c. On a fall in space temperature, the damper in the terminal unit will open and allow air from above the raised floor into the terminal fan. On a continued fall in space temperature, the heating coil control valve at the terminal unit shall be opened to maintain space set point.

3. Low Pressure Supply Air Ductwork
   a. Reference "Central Plant Variable Air Volume System with Hot Water Reheat Terminals"

4. Return/Relief Air System for Variable Volume Air Handling Units
   a. Reference • Central Plant Variable Air Volume System with Hot Water Reheat Terminals •

5. Return/Relief Air Systems for Single Zone Constant Volume/Variable Temperature Air Handling Units
   a. Reference "Central Plant Variable Air Volume System with Hot Water Reheat Terminals"

6. Air Distribution Devices
   a. Underfloor Air Systems – the Design Professional shall determine the final system design relating to either use active damper controlled or passive air distribution devices. If passive devices are selected the plenum pressure controls dampers shall be zoned to provide satisfactory space temperature control by controlling the plenum pressure.

1.06 CENTRAL PLANT WITH UNDERFLOOR AIR VENTILATION SYSTEMS (cont'd)

b. On a fall in space temperature, the zone pressure control damper pressure set point shall be reset downward. On a rise in space temperature the pressure control set point shall be increased.

E. Ventilation Air Systems

1. Reference "Central Plant Variable Air Volume System with Hot Water Reheat Terminals"

F. Exhaust Air Systems

1. Reference "Central Plant Variable Air Volume System with Hot Water Reheat Terminals"

G. Supplemental Heat Systems

1. Reference "Central Plant Variable Air Volume System with Hot Water Reheat Terminals"

H. Electronic Temperature Control System

1. The building shall be split into different zones according to air systems, exterior exposure, and general occupied schedules. Example: Administration area shall be a separate zone; classrooms with southern exposure shall be a separate zone from classrooms with northern exposure, etc.

2. Each occupied space in the building shall include space temperature control.

3. Zones shall be placed into occupied/unoccupied mode through the temperature control computer.

4. Variable volume air handling units shall provide air to match a discharge air temperature set point from the temperature control computer. Small, direct-expansion cooling systems shall be controlled from a return air set point in lieu of discharge air set point.

5. Single zone air handling units shall be controlled from a space-mounted temperature sensor. Space-mounted or return air humidity sensors shall be included in the event reheat is included for humidity control of gymnasiums and student dining. A return duct CO2 sensor shall be provided for large single zone variable occupancy systems utilizing demand ventilation control.

6. Through the temperature control system, it shall be possible to reset the space temperature sensors to a night setback temperature of 55 degrees Fahrenheit for heating to reduce energy consumption.

7. During unoccupied hours, the UFAD terminal fans shall cycle as required to maintain night setback temperatures.

1.06 CENTRAL PLANT WITH UNDERFLOOR AIR VENTILATION SYSTEMS (cont'd)

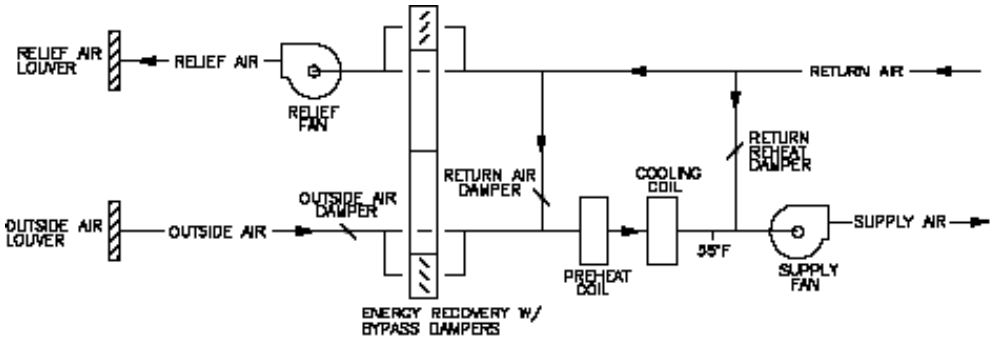

FIGURE I–1

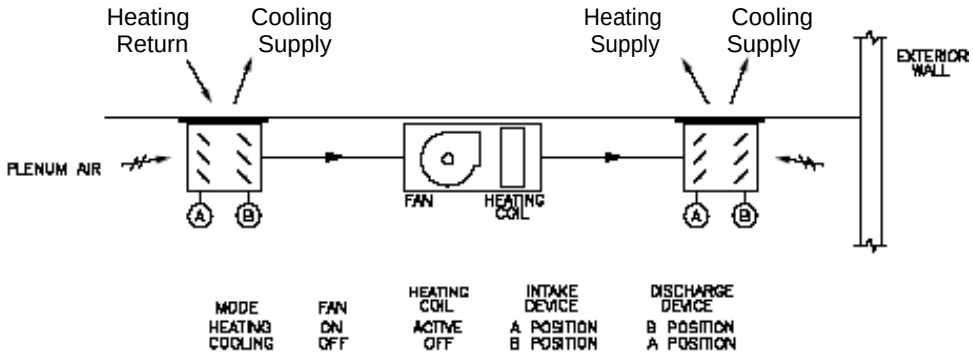

FIGURE I–2
UFAD EXTERIOR ZONE

1.07 CENTRAL PLANT WITH DISPLACEMENT VENTILATION SYSTEMS

A. Central Heating Plant

1. Reference "Central Plant Variable Air Volume System with Hot Water Reheat Terminals"

B. Central Cooling Plant

1. Reference "Central Plant Variable Air Volume System with Hot Water Reheat Terminals"

C. Air Systems

1. Variable Volume Air Handling Units
   a. Reference "Central Plant Variable Air Volume System with Hot Water Reheat Terminals"

1.07 CENTRAL PLANT WITH DISPLACEMENT VENTILATION SYSTEMS (cont'd)

2. Single Zone Variable Volume Air Handling Units
   a. Reference "Central Plant Variable Air Volume System with Hot Water Reheat Terminals"

D. Ductwork Distribution Systems

1. Medium/High Pressure Supply Air Ductwork
   a. Reference "Central Plant Variable Air Volume System with Hot Water Reheat Terminals"

2. Variable Air Volume Reheat Terminal Units
   a. Reference "Central Plant Variable Air Volume System with Hot Water Reheat Terminals"

3. Low Pressure Supply Air Ductwork
   a. Reference "Central Plant Variable Air Volume System with Hot Water Reheat Terminals"

4. Return/Relief Air System for Variable Volume Air Handling Units
   a. Reference • Central Plant Variable Air Volume System with Hot Water Reheat Terminals •

5. Return/Relief Air Systems for Single Zone Constant Volume/Variable Temperature Air Handling Units
   a. Reference "Central Plant Variable Air Volume System with Hot Water Reheat Terminals"

6. Air Distribution Devices
   a. Displacement Ventilation devices shall be specifically designed and tested by the manufacturer for the application. Design professional shall provide a space air distribution analysis as part of the design to assure the devices are located properly.

c. When a displacement ventilation system serves a space with an exterior wall a supplemental heating system shall be provided at the exterior wall.

E. Ventilation Air Systems

1. Reference "Central Plant Variable Air Volume System with Hot Water Reheat Terminals"

F. Exhaust Air Systems

1. Reference "Central Plant Variable Air Volume System with Hot Water Reheat Terminals"

G. Supplemental Heat Systems
1. Reference "Central Plant Variable Air Volume System with Hot Water Reheat Terminals"

1.07 CENTRAL PLANT WITH DISPLACEMENT VENTILATION SYSTEMS (cont'd)

H. Electronic Temperature Control System

1. The building shall be split into different zones according to air systems, exterior exposure, and general occupied schedules. Example: Administration area shall be a separate zone; classrooms with southern exposure shall be a separate zone from classrooms with northern exposure, etc.

2. Each occupied space in the building shall include space temperature control.

3. Zones shall be placed into occupied/unoccupied mode through the temperature control computer.

4. Variable volume air handling units shall provide air to match a discharge air temperature set point from the temperature control computer. Small, direct-expansion cooling systems shall be controlled from a return air set point in lieu of discharge air set point.

5. Single zone air handling units shall be controlled from a space-mounted temperature sensor. Space-mounted or return air humidity sensors shall be included in the event reheat is included for humidity control of gymnasiums and student dining. A return duct CO2 sensor shall be provided for large single zone variable occupancy systems utilizing demand ventilation control.

6. Through the temperature control system, it shall be possible to reset the space temperature sensors to a night setback temperature of 55 degrees Fahrenheit for heating to reduce energy consumption.

7. During unoccupied hours, the air handling unit shall cycle as required to maintain night setback temperatures.

1.08 CENTRAL PLANT VARIABLE AIR VOLUME SYSTEM WITH DUAL-DUCT VAIRABLE VOLUME TERMINALS

A. Central Heating Plant

1. Reference "Central Plant Variable Air Volume System with Hot Water Reheat Terminals."

B. Central Cooling Plant

1. Reference "Central Plant Variable Air Volume System with Hot Water Reheat Terminals."

C. Air Systems

1. Variable Air Volume Air Handling Units

a. This system requires the use of blow-thru heating and cooling air handling units. Air handling units should be located strategically throughout the building to distribute cooling air and heating air to terminal units. Locations of air handling units can be dedicated mechanical rooms or mechanical decks. Air handling units may not be located exterior to the building.

1.08 CENTRAL PLANT VARIABLE AIR VOLUME SYSTEM WITH DUAL-DUCT VAIRABLE VOLUME TERMINALS (cont'd))

b. Each air handling unit shall include the following components as a minimum: supply air fan, cooling coil, heating coil, and filters.

c. Supply air temperature distributed to the terminal units shall be designed for a cold duct temperature of 55 degrees Fahrenheit and a hot duct temperature of 95 degrees Fahrenheit or as required by the computer-generated building load output data.

d. Each air handling unit shall include a variable frequency drive for the fan motor to adjust the air volume available to the system.

e. Energy recovery methods such as desiccant wheels shall be included to precondition the outside air. The energy recovery method selected by the HVAC Design Professional must include latent heat recovery, as well as sensible heat recovery.

f. The air handling unit shall provide ventilation air for the building.

g. Variable air volume systems should be investigated for classrooms, media centers, gymnasiums, student dining, auditerias, and food service, music, and administration areas.

h. Variable air volume systems shall include air flow monitoring systems to maintain the minimum outside air flow requirements as set forth in the Ohio Building Code, Mechanical Code, and ASHRAE Standard 62.1 during occupied hours at all volumes of supply air.

D. Ductwork Distribution Systems

1. Medium/High Pressure Supply Air Ductwork

a. Reference "Central Plant Variable air Volume System with Hot Water Reheat Terminals."

2. Dual-Duct Variable Volume Terminal Units

a. Terminal units shall be located above the ceiling and shall control the flow of air to the space based on a space temperature sensor. Terminal units should be located within 2 feet of an accessible ceiling (where ceilings exist) to allow for maintenance.

b. On a rise in space temperature, the cooling damper in the terminal unit will open and allow air from the cold duct systems into the space. As the space temperature falls, the cooling damper will close to a minimum position as determined by the HVAC Design Professional. The minimum position shall be set to maintain the required ventilation rate to the space. On a continued fall in space temperature, the heating damper shall be modulated open for a blended, final air condition to maintain space set point.

3. Low Pressure Supply Air Ductwork

a. Reference "Central Plant Variable Air Volume System with Hot Water Reheat Terminals."

4. Return/Relief Air System for Variable Volume Air Handling Units

a. Reference "Central Plant Variable Air Volume System with Hot Water Reheat Terminals."

1.08 CENTRAL PLANT VARIABLE AIR VOLUME SYSTEM WITH DUAL-DUCT VAIRABLE VOLUME TERMINALS (cont'd))

E. Ventilation Air Systems

1. Reference "Central Plant Variable Air Volume System with Hot Water Reheat Terminals."

2. Ventilation for the building will be provided through the cooling air handling unit.

F. Exhaust Air Systems

1. Reference "Central Plant Variable Air Volume System with Hot Water Reheat Terminals."

G. Supplemental Heat Systems

1. Reference "Central Plant Variable Air Volume System with Hot Water Reheat Terminals."

H. Electronic Temperature Control System

1. The building shall be split into different zones according to air system, exterior exposure, and general occupied schedules. Example: Administration areas shall be a separate zone; classrooms with southern exposure shall be a separate zone from classroom with northern exposure, etc.

2. Each occupied space in the building shall include space temperature control.

3. Zones shall be placed into occupied/unoccupied mode through the temperature control computer.

4. Cooling and heating variable volume air handling units shall provide air to match a discharge air temperature set point from the temperature control computer. Small, direct-expansion cooling systems shall be controlled from a return air set point in lieu of discharge air set point.

5. Through the temperature control system, it shall be possible to reset the space temperature sensors to a night setback temperature of 55 degrees Fahrenheit for heating to reduce energy consumption.

6. During unoccupied hours, the heating site handling units shall cycle as required to maintain night setback temperatures.

7. Enthalpy economizer control for the building shall be controlled globally from the main temperature control computer. As the enthalpy of the building return air rises above the enthalpy of outside air, the entire building shall be placed into economizer mode as a part of the cooling air handling units. Return air sensors shall be included for each air handling unit.

1.08 CENTRAL PLANT VARIABLE AIR VOLUME SYSTEM WITH DUAL-DUCT VAIRABLE VOLUME TERMINALS (cont'd))

8. Graphic screens shall be included for each air handling unit, boiler plant, cooling plant, and dual-duct, variable air volume terminal unit.

9. Reference "Central Plant Variable Air Volume System with Hot Water Reheat Terminals" for additional temperature control requirements.

***1.09* SYSTEMS FOR SMALL ADDITIONS TO EXISTING BUILDINGS**

A. General – The intent of this section is to set forth criteria for small building additions to existing schools that are being renovated. Building additions of 8,000 square feet and smaller may use the systems described in this section. Additions larger shall follow the criteria of the pre-approved main systems listed in this section or as proposed per section 8410-D.

B. Fan Coil Systems

1. Fan Coil Units shall be four pipe hot, chilled water units with separate heating and cooling coils and DDC electronic controls.

2. Central Heating Plant
Reference "Central Plant Variable Air Volume System with Hot Water Reheat Terminals" of this section.

3. Central Cooling Plant

a. Reference "Central Plant Variable Air Volume System with Hot Water Reheat Terminals" of this section.

4. Ventilation Air System

a. The system shall have a dedicated 100% outside air ventilation system following the guidelines of this section "Water Source Heat Pump System", subparagraph 5, Ventilation Air System.

5. Ductwork Distribution Systems

a. Shall follow section "Water Source Heat Pump System", subparagraph 6. Ductwork Distribution System.

6. Other systems required to complete the project such as kitchens, etc. shall follow the applicable requirements of this section.

7. Fan Coil System Temperature Control

a. Each occupied space in the building shall include space temperature control.

b. Zones shall be placed into occupied/unoccupied mode by the temperature control computer via schedule or over-ride at the graphic screen or zone thermostat push-button.

1.09 SYSTEMS FOR SMALL ADDITIONS TO EXISTING BUILDINGS (cont'd)

c. The temperature control system shall reset the space temperature sensors to a night setback temperature of 55 degrees Fahrenheit. During unoccupied hours, fan coil units shall cycle as required to maintain night setback temperatures.

d. Graphic screens shall be included for each fan coil unit, in addition to the screens for the boiler plant, chiller plant, circulation pumps and other HVAC primary components.

e. Fan coil units shall be controlled to cycle during unoccupied hours in order to maintain space relative humidity in the range of 60% to 65% RH.

C. Unit Ventilator Systems

1. Unit ventilators shall be four pipe hot and chilled water units with individual heating and cooling coils. Units shall have face and bypass dampers for capacity control and outside and return air dampers for economizer control.

2. Units shall be equipped with DDC electronic controls, including hot and chilled water valves, actuators for the F&B dampers and economizer. A variable speed controller shall be provided to vary the speed on the supply fan. The unit sequence of operation shall be VAV single zone. The ventilation air shall be controlled by a return air CO_2 sensor to provide a demand control ventilation sequence.

3. Central Heating Plant

a. Reference "Central Plant Variable Air Volume System with Hot Water Reheat Terminals" of this section.

4. Central Chilled Water Plant

a. Reference "Central Plant Variable Air Volume System with Hot Water Reheat Terminals" of this section.

5. Other systems required to complete the project such as kitchens, etc. shall follow applicable requirements of this section.

6. Unit Ventilator Temperature Controls

a. Units shall be a single zone VAV unit with modulating fan speed, economizer, face and bypass dampers, a heating coil and serpentine cooling coil.

b. Start-Stop – optimal start, morning warm-up and cool down shall be provided thru the digital control system.

c. Minimum outside air shall be under control of a demand control ventilation sequence to maintain the CO_2 level in the room to less than 700 ppm above outside air condition.

d. A zone (one sensor for each room) humidity sensor shall override the system off mode if the humidity in the space is greater than 60% RH for more than 8 hours.

e. The fan speed, economizer, face and bypass dampers, heating, cooling coil valves and dehumidification mode shall be controlled in sequence from a room-temperature and humidity sensor and unit mounted CO_2 sensor.

1.09 SYSTEMS FOR SMALL ADDITIONS TO EXISTING BUILDINGS (cont'd)

f. Economizer shall be enabled when the outside air temperature is below 65 degrees F. and the outside air enthalpy is below 30 BTU/LB.

1.10 RECOGNIZED HVAC SYSTEMS REQUIRING SUBMISSION FOR VARIANCE APPROVAL

A. Alternate HVAC systems not specifically identified in this manual may be considered for inclusion in the building design though a Design Manual Variance Request. Systems identified in this section have been approved on a case-by-case basis with other districts.

B. Active Chilled Beams

1. Central Heating Plant

a. Reference "Central Plant Variable Air Volume System with Hot Water Reheat Terminals."

2. Central Cooling Plant

a. Reference "Central Plant Variable Air Volume System with Hot Water Reheat Terminals."

3. Chilled Beam Cooling Water

a. Design water supply temperatures shall be maintained one to two degrees Fahrenheit above the ambient dew point of the building to prevent condensation from developing on the chilled beam coils. This will typically be between 58 degrees Fahrenheit and 60 degrees Fahrenheit.

b. Design Professional shall determine the strategy to deliver chilled water that is maintained above the ambient dew point. Use of chilled water return as supply piping to chilled beams is not acceptable; return water temperature cannot be maintained above ambient dew point. Potential strategies may be investigated within the allocated funding:

1) Dedicated chiller

2) Heat exchanger

3) Three-way mixing valve with the Chilled Water system

c. Design water temperature rise in the chilled beam distribution shall be determined by the Design Professional.

d. Water distribution hall make use of a revers return or direct return piping arrangement.

e. A single pump shall be used for water circulation to the chilled beams. Direct return systems shall use flow controllers for water balancing.

f. The chilled beam distribution water shall be capable of a minimum 50 percent flow reduction through the use of two-way control valves, three-way control valves and variable speed pumps.

1.10 RECOGNIZED HVAC SYSTEMS REQUIRING SUBMISSION FOR VARIANCE APPROVAL (cont'd)

g. Air removal and/or containment methods are required on closed loop applications.
1) Expansion tanks
2) Air separator
3) Air vent

h. Each closed loop system shall be provided with a water treatment system to prevent corrosion and scaling in the distribution system.

4. Ventilation Air Systems
a. Reference "Water Heat Pump System."

5. Ductwork Distribution Systems
a. Ventilation air is distributed from the air handling units to the active chilled beams via a low pressure ductwork system. The maximum air velocity in this part of the ductwork system should be 1,200 feet per minute.
b. Supply air ductwork connections to chilled beams should be completed with flexible ductwork.
c. Each low pressure duct leading to a chilled beam should include a manual damper to balance the system.

6. Exhaust Air Systems
a. Reference "Central Plant Variable Air Volume System with Hot Water Reheat Terminals."
b. Exhaust rates for Art Room, Science Lab and Life Skills Lab shall be established at 125vpercent of the primary supply air rate for the space, but not less than required by state and local building codes. Adjustments incorporated into the sequences of operation to decrease relief air whenever the local space exhaust is energized.

7. Supplemental Heat Systems
a. Reference "Central Plant Variable Air Volume System with Hot Water Reheat Terminals."

8. Electronic Temperature Control Systems
a. The building shall be split into different zones according to air systems, exterior exposure and general occupied schedules.
b. Each occupied space in the building shall include space temperature control.
c. Zones shall be placed into occupied/unoccupied mode through the temperature control computer.
d. Through the temperature control system, it shall be possible to reset the space temperature sensors to a night setback temperature of 55 degrees Fahrenheit for heating and 85 degrees Fahrenheit for cooling to reduce energy consumption.
e. During unoccupied hours, air handling units shall cycle only as required to maintain night setback temperatures.

1.10 RECOGNIZED HVAC SYSTEMS REQUIRING SUBMISSION FOR VARIANCE APPROVAL (cont'd)

f. Graphic screens shall be included for each air handling unit, boiler plant, cooling plant, chilled beam zones and floor plan.

g. The heating water pumping system shall be enabled when ambient temperatures drop below 50 degrees Fahrenheit during unoccupied hours and 55 to 70 degrees Fahrenheit during occupied hours. Design Professional shall determine the occupied setpoint based on thermal balance. Boilers shall maintain water temperature while the pumping system is enabled. It is recommended with multiple boiler arrangements that a flow-measuring device is used in conjunction with supply and return temperature sensors to calculate system BTU/hr required and to then stage the boilers accordingly.

h. The chilled water pumping system shall be enabled when ambient temperatures rise above 50 degrees Fahrenheit during occupied hours or when the building relative humidity rises above 60 percent. Chillers shall maintain water temperature while the pumping system is enabled. Systems will shut down during unoccupied hours when the relative humidity falls below 60 percent.

i. The chilled beam water pumping system shall be enabled when ambient temperatures rise above 50 degrees Fahrenheit during occupied hours.

j. The temperature control system shall prevent the return water temperature from dropping below the required temperature allowable at the boilers.

k. All air handling units shall be controlled to cycle during unoccupied hors in order to prevent space relative humidity in excess of 60 percent. Systems will shut own when the relative humidity falls below 55 percent. 100% Outside Air Units shall include recirculation dampers for operation during unoccupied hours without the need to open outside air dampers.

C. Variable Refrigerant Flow/Variable Refrigerant Volume

1. Variable Refrigerant Flow (VRF) is an air-conditioning system configuration where one outdoor heat pump condensing unit is connected to multiple indoor evaporator fan coil units.

a. VRF systems should be located strategically throughout the building and zoned to handle areas with similar occupancy schedules.

b. Outdoor units should be selected with a capacity of not less than 125% of the connected indoor unit capacity.

c. Design Professional shall investigate whether VRF systems should include heat recovery to allow independent temperature zones to be in heating or cooling mode while the outdoor unit responds to the dominant load of the overall zone. It is recommended to include heat recovery unless all temperature zones within the system have a similar internal load profile and envelope exposure (i.e. all north facing classrooms.)

1.10 RECOGNIZED HVAC SYSTEMS REQUIRING SUBMISSION FOR VARIANCE APPROVAL (cont'd)

1) For systems without heat recovery, the automatic switchover time from heating to cooling of the outdoor unit shall not exceed 30 minutes.

d. Refrigerant piping should be extended from outdoor unit to all indoor units. Design Professional shall consult manufacturer requirements for maximum length of refrigerant circuit and minimum length before first branch take-off.

2. Ventilation Air Systems

a. Reference "Water Heat Pump System."

3. Classroom Fan Coil Units

a. Fan coils shall be located above accessible corridor ceiling, arranged together on a mechanical deck or other appropriate locations. Units will not be permitted over classroom ceilings due to difficulty servicing while school is operating. Ceiling cassette units are not acceptable.

b. Fan coils shall be sized as required to maintain temperature throughout the space. Fan coils are not intended to handle latent or sensible loads from ventilation air system.

c. Fan coil fans shall run continuously during occupied hours

d. Condensate piping hall be routed from each fan coil to an acceptable discharge location such as a custodial sink, floor drain or exterior to the building. Design Professional shall consider condensate reclaim as prescribed in ASHRAE Standard 189.1 for systems greater than 65,000 Btu/h. Condensate piping located within the plenum shall be suitable for plenum use.

4. Ductwork Distribution Systems

a. Ventilation Air Ductwork

1) Ventilation air shall be distributed from the air handling units to the classroom via a low pressure ductwork system. The maximum air velocity in this part of the ductwork should be 1,200 feet per minute.

2) Ventilation air ductwork shall be introduced with directly to the space or to the return air path of the terminal fan coil. Do not introduce ventilation air directly to the plenum space above the ceiling. In some cases, ventilation must be connected directly to the space being served (i.e. ventilation airflow required higher that terminal airflow required.)

b. Low Pressure Duct Distribution System

1) Air is distributed from the fan coil units to air devices located throughout the space via a low pressure ductwork system The maximum air velocity in this part of the ductwork system should not exceed 1,200 feet per minute.

2) Supply air ductwork connections to ceiling-mounted air devices should be completed with flexible ductwork.

1.10 RECOGNIZED HVAC SYSTEMS REQUIRING SUBMISSION FOR VARIANCE APPROVAL (cont'd)

3) Air devices should be ceiling mounted, wherever possible, to prevent damage by students. If spaces do not include ceiling, the air devices should be wall- or duct-mounted out of reach of students.

4) Each low pressure duct leading to an air device should include a manual volume damper to balance the system.

c. Return/Relief Air System

1) The return air plenum for the indoor fan coils is the space between the ceiling and the structure of the building. All materials inside the plenum areas should be rated for this type of application to reduce smoke and fire potential.

2) Return air is routed into the plenum through return grilles in the ceiling. Return air is induced from the plenum by the supply fan of the individual fan coil.

3) Relief air is pulled back to the mechanical room by the relief air fan and exits the building through an energy recovery system. Roof-mounted gravity relief ventilators or exterior, wall-mounted louvers with backdraft dampers should be used as exit points for the relief air.

4) The relief air fan should be sized to maintain a slight positive pressure in the space.

5. Exhaust Air Systems

a. Reference "Central Plant Variable Air Volume System with Hot Water Reheat Terminals."

b. Exhaust rates for Art Room, Science Lab and Life Skills Lab shall be established at 125 percent of the primary supply air rate for the space, but not less than required by state and local building codes. Adjustments shall be incorporated into the sequences of operation to decrease relief air whenever the local space exhaust is energized.

6. Supplemental Heat Systems

a. Reference "Central Plant Variable Air Volume System with Hot Water Reheat Terminals."

7. Electronic Temperature Control Systems

a. VRF/VRV system shall include BACnet or LON interface gateway to communicate with the Building Automation System (BAS). All control points within the VRF control system shall be mapped back to the BAS. BAS shall provide occupancy schedules and setpoint values to VRF control system.

b. The building shall be spilt into different zones according to air systems, exterior exposure and general occupied schedules.

c. Each occupied space in the building shall include space temperature control.

1.10 RECOGNIZED HVAC SYSTEMS REQUIRING SUBMISSION FOR VARIANCE APPROVAL (cont'd)

d. Zones shall be placed into occupied/unoccupied mode through the BAS. Duplicate occupancy schedules shall not reside in the VRF controls.

e. Through the temperature control system, it shall be possible to reset the space temperature sensors to a night setback temperature of 55 degrees Fahrenheit for heating and 85 degrees Fahrenheit for cooling to reduce energy consumption. ***Night setback temperature for VRF systems shall be adjustable.***

f. During unoccupied hours, air handling units shall cycle only as required to maintain night setback temperatures.

g. Graphic screens shall be included for each air handling unit, VRF outdoor unit, VRF indoor unit zones and floor plan.

h. All air handling units shall be controlled to cycle during unoccupied hours in order to prevent space relative humidity in excess of 60 percent. Systems will shut down when the relative humidity falls below 55 percent. 100% Outside Air Units shall include recirculation dampers for operation during unoccupied hours without the need to open outside air dampers.

END OF SECTION

THIS PAGE HAS BEEN LEFT INTENTIONALLY BLANK

SECTION 8500

TECHNOLOGY SYSTEMS

1.01 INTRODUCTION

A. The Technology Systems Plans and Specifications shall be prepared in accordance with the latest edition of the BICSI Telecommunications Distribution Methods Manual (TDMM), the requirements of the OSDM as outlined herein, and shall be designed and approved by an RCDD with a minimum of 3-years experience. Refer to the OFCC Technology Phase Submission Form for ***DD and CD phase*** submittal requirements.

B. The Telecommunications Plans shall provide a minimum level of content as described herein. The guide below is intended to convey the basic information that is required to be included in Telecommunications Systems Plans. Additional information may be required based upon the scope and nature of the design. The guide below is not intended to set forth an exact organizational or numbering format for Telecommunications Plans.

1. T0 Site Plans - Projects where new telecommunications services are being provided shall be included with a site plan. The plan shall indicate proposed routing of incoming services including any required underground or aerial pathways. Site plan should also indicate approximate location within building outline of any exterior pathways' termination point as well as inter-building backbone cabling in a Campus setting. This information may be included on the Electrical Site Plan.

2. T1 Composite Plans - Complete building composite floor plans for each floor at a scale no less than 1"=20'-0". The composite floor plans shall indicate locations of Telecommunications Rooms, cable assignment for each TR, major cable pathways including cable tray and conduit risers. Other information which may be included on the plans are security zones, wireless access points, and security camera locations.

3. T2 Floor Plans– Building floor plans at a scale of not less than 3/32"=1'-0", broken down with appropriate match lines for large buildings and key plan on each sheet to correspond to plan location within building. Floor plans shall include all technology outlets and equipment. Where loose equipment is presented in a table format, drawing symbols for these items may be omitted. Floor plans must include room numbers and names within the sheets for each space.

4. T3 Telecommunications Spaces – Large scale plans of the Telecommunications Spaces at a scale of not less than ½"=1'-0". The large scale plans shall include a floor plan, rack elevations and wall elevations for each telecommunications space. Floor plans shall indicate all equipment including racks, cabinets, ladder rack, conduit sleeves, etc. In addition, electrical requirements such as outlet types and locations must be referenced to coordinate with electrical drawings. Rack elevations must be to scale and show actual equipment to be installed for each rack. Where equipment size varies based upon manufacturers used, the largest equipment shall be included in the elevations. Wall elevations must show, at a minimum, dedicated spaces with approximate size for the various wall mounted items of equipment for the various systems.

5. T4 Details - Technology details including symbol legends, system schematic wiring diagrams, system riser diagrams, specialty details for equipment mounting, etc. The technology details must provide a clear and accurate picture of each system and the interconnectivity associated with that system and the integration between systems.
6. Miscellaneous Drawings. Additional drawings that can be used in conjunction with the above-listed drawings.

C. The Technology Designer should endeavor to reduce the quantity of Telecommunications Rooms (TRs) by centralizing the TRs and/or using one TR to serve multiple floors. For example, in a 3-story building, place the TR on the second floor and serve the 1st, 2nd, and 3rd floors from the same closet. The Technology Designer should consider locating the Equipment Room (ER) in a central building location if feasible. Coordinate the location, quantity, and size of the ER and TRs required early in the design process with the Design Professional.

D. The Technology Designer shall endeavor to centralize as many Technology and Control Systems as possible for the District into one school building or Network Operations Center (NOC) and interconnect the buildings and systems via fiber-optic cables whenever economically feasible.

E. The Technology Designer should consider using the savings from the centralization of systems to offset the cost of inter-building, fiber-optic cabling. Capital costs for Inter-Building, Fiber-Optic Cables can be included in the project, provided the overall Project Technology Budget is not exceeded.

F. E-Rate grant opportunities for “Internal Connections” shall be considered for all OFCC projects. The Technology Designer shall coordinate all Technology Designs and Schedules with the Construction Manager, the School District, and the eTech Ohio E-Rate Coordinator.

G. Since many of the Technology Systems could be operational for life-safety purposes and building evacuation purposes, the Technology Designer is to connect these systems and their associated UPS units to the Building’s Emergency Generator System when available. Coordinate the electrical loads, outlet types, and circuit locations with the Electrical Design Engineer. These systems include:
1. Security Systems (CCTV, Access Control, and Intrusion)
2. Telecommunication rooms UPS circuits
3. Telephone System
4. Paging and Central Sound System

H. The Technology Designer shall coordinate all ER and TRs equipment BTU loads, cooling and hours of operation requirements with the HVAC Design Engineer.

I. The Technology Designer shall assure all specifications require Contractors to submit shop drawings detailing the specific equipment provided for the project as well as O&M manuals containing project specific data. Generic equipment or system information is not acceptable. Additionally, requirements for “as-built” drawings from the Contractors for wiring diagrams, final system configurations, etc. are to be part of the specifications. The School District is to receive record documentation of the final actual installation of all technology systems.

J. The specification of Technology Equipment (computers, A/V displays, etc.) that have the Energy Star label is preferred, when applicable.

K. The Technology Designer shall coordinate specific requirements of extended learning areas (ELAs) with the School District. As a minimum, provide access to the data network and one (1) video port for each ELA.

L. The Technology Designer shall verify with the School District during the Programming Phase if they will be implementing any special technology applications or interfacing with third party entities (i.e. hosting or cloud computing solutions) that would affect the Technology or Facility Design.

M. The Technology Designer shall submit required technical data validating the WLAN design to achieve ***ubiquitous high-density coverage throughout the building*** with the technology phase submissions. Refer to Section 27 21 33 for requirements.

N. The Technology Designer shall coordinate with other Design Professionals adequate dedicated rooftop space to accommodate current or future system antennas.

O. The Technology Designer shall coordinate with the District regarding their on-line testing assessment procedures and policies. This is to ensure that the technology design and infrastructure will meet the District requirements.

P. The Technology Designer shall coordinate with the District regarding the bandwidth needs of the District. The increase of wireless devices and increased bandwidth requirements , may necessitate an increase of bandwidth coming into the District building(s). Review should also consider ongoing maintenance cost for increased bandwidth.

Q. Note that an OSDM Technology and Security Checklist is located on the OFCC website. It is intended as a reference tool for use by the Technology Designer.

1.02 TECHNOLOGY SYSTEMS

A. Each OFCC Construction Project for new and remodeled facilities shall provide the baseline Technology systems. Additional non-baseline (optional) systems shall be added based on budget limitations.

B. The Technology Designer shall design the following required Technology Systems for all new and remodeled buildings. Refer to the OSDM sections listed below for additional information:

1. COMMUNICATIONS – DIVISION 27

a. Section 27 05 26 -- Grounding and Bonding for Communications Systems.

b. Section 27 11 00 -- Communications Equipment Room Fittings.

c. Section 27 13 13 -- Communications Copper Backbone Cabling.

d. Section 27 13 23 -- Communications Optical Fiber Backbone Cabling.

e. Section 27 15 13 – Communications Copper Horizontal Cabling.

f. Section 27 15 43 -- Audio-Video Communications Horizontal Transport System.

g. Section 27 21 00 -- Data Communications Network Equipment.

h. Section 27 21 33 -- Data Communications Wireless Access Points.

i. Section 27 31 13 -- IP-Enabled PABX System.

j. Section 27 31 23 -- IP Only PABX System.

k. Section 27 41 19 -- Video Display Equipment.

l. Section 27 41 25 -- Digital Media Management System.

m. Section 27 51 21 -- Student Dining / Auditeria Sound Reinforcement System – High School.

n. Section 27 51 22 -- Student Dining / Cafeteria Sound Reinforcement System.

o. Section 27 51 23 – Central Sound and Paging System

p. Section 27 51 24 -- Gymnasium Sound Reinforcement System.

q. Section 27 51 25 -- Music Room Audio Program Playback System - Middle School.

r. Section 27 51 26 -- Music Room Audio Recording/Playback System - High School

s. Section 27 51 27 -- Classroom Sound Reinforcement System.

t. Section 27 53 13 -- Clock Systems.

2. ELECTRONIC SAFETY AND SECURITY – DIVISION 28

a. Section 28 13 00 -- Access Control System.

b. Section 28 16 00 -- Intrusion Detection System.

c. Section 28 23 00 -- Video Surveillance System.

d. Section 28 26 00 – Area of Refuge Intercommunication System

C. The following items summarize the Technology Systems provided. The Base Line (required) systems are listed as well as the Optional Systems.

1. TECHNOLOGY ELECTRICAL WORK

a. These items are generally bid out as the Technology Electrical Package and are usually included in the Project's Electrical Bid Package.

b. Back Boxes.
   1) Includes back boxes and floor boxes that are part of the Technology system

c. Cable Tray
   1) Includes an OSDM Compliant, wire mesh, Cable Tray system.

d. Conduits.
   1) Includes Technology conduit sleeves and conduits back to the cable tray as per OSDM.

e. Entrance Conduits – typical.
   1) Includes an allowance for a typical Service Provider UG Conduit System - if you have an unusually long Entrance (greater than 400 feet) adjust as required.

f. Telecom Grounding.
   1) Includes Telecom Grounding System, Ground Bars, and Cable Tray Grounding.

g. Backboards.
   1) Includes Painted Plywood backboards in Telecom Closets.

h. Power.
   1) Includes Rack and Cabinet Power Conduits, Stubs and pigtails to Junction Box only.
   2) Does NOT include Technology Power wiring -- part of Electrical Package.

2. TECHNOLOGY CABLING

a. This Section includes the Technology Data Cabling and is based on an OSDM Compliant CAT - 6 system.

b. Wireless Access Points (WAP's) are to be served by ***a shielded*** CAT-6a system.

c. User Cabling Drops, Faceplates and Jacks.
   1) Includes all Technology related Data Cables.

d. Patch Panels.
   1) Includes Data and backbone patch panels.
   2) Cable Organizers.

e. M/M & S/M Fiber Cabling.
   1) Includes internal fiber cabling and materials

f. Backbone Copper and Fiber Cabling.
   1) Includes internal copper and fiber cables.
   2) M/M fiber shall be 50 micron OM4 laser optimized for new work or special applications.
   3) SM fiber shall be OS2.
   4) IP-Enabled PBXs include copper backbone cabling and associated 110 blocks and patch panels. All-IP PABX systems may not require copper backbone cabling and associated 110 blocks and patch panels.

g. Fiber Patch Panels
   1) Includes fusion spliced ends for all M/M and S/M cables or preterminated fiber and associated cassette system.

h. 110 Blocks.
   1) Includes miscellaneous backbone cable blocks -- PBX & Paging blocks in other sections.

i. Telecom Racks.
   1) Includes Telecom Closet Racks, Cabinets and associated Cable Ladder Rack.

j. Monitor/Projector Brackets.
   1) Includes projector ceiling brackets, conduits and monitor brackets (NO Electrical).

3. NETWORK ELECTRONICS

a. This Section includes the Network Electronics as based on an OSDM Compliant Network.

b. L-3 Core Switch.
   1) Includes Layer-3 Chassis Core switch and associated Copper and Fiber Interfaces.
   2) Includes ***GB*** TX ports for common devices and local ***GB*** switches.
   3) Includes F/O ports for remote switches and WAN interface.
   4) Switch shall include both 1GB and 10GB interfaces.
   5) 10 GB interface for WLAN minimum 10GB.

c. ***GB*** User Switches
   1) Switches shall provide user ports equal to the number of devices plus 15% spare.
   2) Provide either switch stacks utilizing 48 port switches or modular chassis. ***All switch ports shall be 802.11ac at POE+.***
   3) Provide dual 10GB uplinks to each switch stack/chassis.

d. Wireless Access Points (APs).
   1) ***802.11ac standard shall be followed*** and ubiquitous high-density coverage throughout the building.

2) Includes CIPA Compliant System with building-wide ***ubiquitous*** coverage and rogue signal protection.

e. Wireless Controller/Switches.
   1) Includes Central Wireless Controller, Control Software and Server Appliance ***or a "cloud-based" controller.***
   2) Includes Location Tracking.
   3) Include Mobile Device Management (MDM.)
   4) Include App Management Software.

f. Radius Authentication Server.
   1) Includes Radius Server and Software for Network Authentication.
   2) Assumes District supplied Authentication Data base.

g. POE+
   1) Provide Power over Ethernet (POE+) ***for all ports,*** plus 15% spare.

h. UPS Units
   1) Includes UPS Units for Main and Auxiliary Telecom Rooms.
   2) Standby based on connection to Building Generator for all Technology Closets.
   3) Power Stub up to Junction Boxes in TE Item above.
   4) Electrical Circuits to Generator in Separate Electrical Package.

i. Fiber Patch Cords.

j. Copper Patch Cords.

4. IP-ONLY PABX SYSTEM ***– New System IP-Based Designs***

a. This section includes an IP-Only phone system based on OSDM requirements.
   1) The typical system shall include Voice Mail and carrier circuits interfaces – these are based on whether the District has a central, redundant, IP-Only phone system that links all buildings together. If a central, redundant, IP-Only phone system exists, then Call Processing, carrier circuits, and Voice Mail are provided at the central location and the remote buildings are interconnected over the fiber-optic WAN. The remote buildings shall have Survivable Remote Units for call processing in the event of a fiber WAN failure.
   2) Hosted Solution – Technology Designer to coordinate with the School District if a hosted IP-Only PABX system is the District's preference. An OFCC variance shall be obtained if it is determined that a hosted IP-Only PABX system is to be implemented. Specific items to review include:
      a) Method of incorporation into the designed technology system(s).
      b) Total cost of ownership / annual costs, etc.
      c) Training requirements.

d) Cost for systems and equipment not located in the District and/or owned by the District is not OFCC funded.

b. IP-Only PBX
   1) An IP-Only PBX supports both IP phones and analog devices (FAXes, etc.) and IP Trunking between buildings.
   2) Includes software for connection to Central District IP-Only PBX.

c. Digital Display Speaker Phone IP-Instruments
   1) Includes classroom and administration phones as per OSDM.
   2) Refer to specification sections 273113 and 273123 which describe when full duplex speaker phones for classroom and other spaces could be optional.
   3) Shall include E-911 room identification.

d. 2 Wireless Phone Instruments
   1) Includes OSDM compliant wireless phones and chargers.

e. 2 Attendant Consoles
   1) Includes 2 Attendant, PC-based consoles, per OSDM.

f. Power Failure Transfer (PFT) Unit
   1) Includes Power Failure Transfer Unit for E-911 and emergency backup.
   2) Includes 2 analog PFT Emergency backup phones.

g. Interconnect Cables

h. Analog Trunk Interfaces
   1) Includes Analog Trunk Interfaces for E-911 Backup.

i. Analog Station Interfaces
   1) Includes Analog Station Interfaces for FAXes, etc.

j. Digital Trunk Interfaces – include a minimum of one of the following:
   1) PRI Interface (exception see above, add capacity as required at central location to support facility)
   2) SIP Trunk Interface (exception see above, add capacity as required at central location to support facility)

k. Voice Mail System
   3) Include a minimum of one mail box for each staff member located at facility plus miscellaneous mailboxes as required by District. (exception see above, if voice mail system is centralized provide additional mail licenses at central location to support facility)

l. Copper Patch Cords.

m. IP Trunking
   1) Includes IP trunking software for Inter IP-Only PBX Communication.

n. POE+ Switches
   1) Includes POE+ Ports for connection of all IP instruments.
   2) Includes additional L-3 Core Switch interfaces for the POE+ switches.

5. IP-ENABLED PABX SYSTEM – Optional if extending ***an*** existing system

a. This Section includes an IP Enabled Phone System based on OSDM Requirements.

   1) The system shall include Voice Mail and adequate circuits to local carrier to support outside call requirements. If this system is part of a district-wide phone system, then the Voice Mail and primary outside carrier circuit capacity may be provided from the central PBX location as long as the local system is connected (networked) to central PBX over the school district WAN.
   2) Hosted Solution – Technology Designer to coordinate with the School District if a hosted IP-Enabled PABX system is the District's preference. An OFCC variance shall be obtained if it is determined that a hosted IP-Enabled PABX system is to be implemented. Specific items to review include:
      a) Method of incorporation into the designed technology system(s).
      b) Total cost of ownership / annual costs, etc.
      c) Training requirements.
      d) Cost for systems and equipment not located in the District and/or owned by the District is not OFCC funded.

b. IP-Enabled PBX.
   1) An IP Enabled PBX supports TDM, analog devices (FAXes, etc.), and IP Phones and IP Trunking between buildings.
   2) Includes software for connection to Central District PBX.

c. Digital Display Speaker Phone Instruments.
   1) Includes Classroom and Administration Phones as per OSDM.
   2) Refer to specification sections 273113 and 273123 which describe when full duplex speaker phones for classroom and other spaces could be optional.
   3) Shall include E-911 room identification.

d. 2 Wireless Phone Instruments.
   1) Includes OSDM Compliant Wireless Phones and chargers.

e. 2 Attendant Consoles.
   1) Includes 2 attendant consoles and busy lamp fields as per OSDM.

f. Power Failure Transfer (PFT) Unit.
   1) Includes Power Failure Transfer Unit for E-911 and emergency backup.
   2) Includes 2 Analog PFT Emergency backup phones.

g. Interconnect Cables.

h. Analog Trunk Interfaces.
   1) Includes Analog Trunk Interfaces for E-911 Backup.

i. Analog Station Interfaces.
   1) Includes Analog Station Interfaces for FAXes, etc.

j. Digital Trunk Interfaces – include a minimum of one of the following:
   1) PRI Interface (exception see above, add capacity as required at central location to support facility)
   2) SIP Trunk Interface (exception see above, add capacity as required at central location to support facility)

k. Voice Mail System
   1) Include a minimum of one mail box for each staff member located at facility plus miscellaneous mailboxes as required by District. (exception see above, if voice mail system is centralized provide additional mail licenses at central location to support facility)

l. Copper Patch Cords.

m. IP Trunking
   1) Includes IP trunking software for Inter PBX Communication.

6. CCTV SYSTEM – NEW SYSTEM IP BASED DESIGNS

a. This section includes the IP CCTV Camera System based on OSDM Requirements.
   1) The system includes a typical CCTV Coverage system with internal and external cameras – both fixed and PTZ.
   2) The camera coverage is typical of an urban school setting and includes complete building coverage – adjust as required if more coverage is required.

b. Interior Cameras
   1) Includes interior dome, vari-focus camera, and UTP data cable.

c. Exterior Cameras
   1) Includes exterior dome, vari-focus camera, housing, and UTP data and power cables.

d. Exterior PTZ Cameras
   1) Includes exterior PTZ camera, housing, UTP data, power and control cables.

e. Power Supplies
   1) Connected to technology closet UPS and building emergency generator circuit(s).
   2) Includes POE+ Switches for powering internal cameras.

f. Control Units
   1) Includes networked Central Networked Camera Servers.
   2) Includes Central Network Attached Video Storage and associated Controllers.
   3) Includes Central Network Storage Fiber-Channel Switch.
   4) Includes Central KVM Switch.
   5) Includes integration with Access and Intrusion System.
   6) Includes Central Office Mic.
   7) Includes Remote Client Viewing Software.

g. CCTV Cables
   1) Includes UTP data cables and patch panels.

7. CCTV SYSTEM – LEGACY DVR BASED SYSTEMS – Optional if extending an existing system.

a. This Section includes the CCTV Camera System based on OSDM Requirements.
   1) The system includes a typical CCTV Coverage system with internal and external cameras -- both fixed and PTZ.
   2) The Camera coverage is typical of an urban school setting and includes complete building coverage - adjust as required if more coverage is required.

b. Interior Cameras
   1) Includes interior dome, vari-focus camera, coax and power cable.

c. Exterior Cameras
   1) Includes exterior dome, vari-focus camera, housing, coax and power cable.

d. Exterior PTZ Cameras
   1) Includes exterior PTZ camera, housing, coax and power and control cables.

e. Power Supplies.
   1) Connected to technology closet UPS and building emergency generator circuit(s).

f. DVR Units
   1) Includes networked DVR with local KVM switch.
   2) Includes integration with Access and Intrusion System.
   3) Includes Central Office Mic.
   4) Includes Remote Client Viewing Software.

g. CCTV Cables
   1) Includes Coax patch panels.

8. ACCESS AND INTRUSION SYSTEM

a. This Section includes the Building Access Control AND Intrusion System based on OSDM Requirements.
   1) The system includes a typical Card reader, and Door Control system.
   2) The System is typical of an urban school setting and includes complete building coverage - adjust as required if more coverage is required.
   3) The system is based on complete integration with CCTV and Intrusion Detection System.
   4) Central District NOC Control Software and Consoles are NOT Included - Depends on District Configuration -- see above.

b. Motion Detectors - Optional
   1) The Technology Designer shall verify use and coverage areas with the School District.

c. Card Readers.
   1) Includes Proximity Readers with Keypads for Controlled Doors.
   2) Includes Elevator Reader.
   3) Includes Tech Closet Reader.

d. Intrusion Panels.
   1) Includes Intrusion Control Panels.

e. Door Control.
   1) Access/Control Cables.

f. Power Supplies.
   1) Connect to Technology Room UPS and Building Emergency Generator Circuit(s).

g. Central Control Software is Optional -- see above.

9. PAGING & CENTRAL SOUND SYSTEM.

a. This Section includes the Building Central Sound and Paging System based on OSDM Requirements.
   1) The system is based on a micro-processor based two-way intercom, paging and program distribution system connected to the PBX System via a multi-zone paging adapter as per OSDM.
   2) The Central Office CD/***Digital Player/***FM Tuner is connected to the Paging System as per OSDM.
   3) The Central Office Emergency Evacuation Switch and Tone Generator are connected to the Paging System as per OSDM.
   4) An FM Antenna system is provided for feeding the various FM tuners located in the building.

5) The Central Bell/Clock system is connected to the paging system.

b. Paging Speakers.
- ***1)*** Includes speaker and ceiling tile bridge or paging horn as required.
- ***2)*** Paging Speaker Cable.
- ***3)*** Includes paging speaker(s) and call-button cable installed in cable tray.
- ***4)*** All Educational space speaker(s) and call-button cables are home-run to Central Closet. Common area paging zones (i.e. corridors) may utilize daisy chain cabling for speaker(s) associated with that particular zone.

c. Call Buttons
- ***1)*** Technology Designer to review with District. Base line item, variance request if District elects not to include. Each Educational space to have wall-mounted call-in button. Review need for conduit/box rough-in for future if District elects not to include.
- ***2)*** Call-button cabling is included in baseline system whether the call button is installed or not. Extend to speaker location if call button is not installed.

d. Paging Adapter.
- ***1)*** Includes multi-zone microprocessor controlled paging adapter in central Telecom Closet.

e. Paging Blocks.
- ***1)*** Includes 110 cross-connect blocks for multi-zone connections.

f. Paging Power Supplies.
- ***1)*** Includes Amplified Speaker Power supplies -- connected to ` UPS/Generator.

g. Tone Generator.
- ***1)*** Includes multi Tone Generator for emergency signals.

h. Emergency Switch.
- ***1)*** Located in Central Office.

i. Central FM Tuner.
- ***1)*** Located in Central Office.

j. Call Annunciator
- ***1)*** Base line – Main office to have LCD/LED room call-in annunciator. Variance required if District elects not to include.

k. Central CD / Digital Player.
- ***1)*** Located in Central Office.

l. FM Antenna.
   1) FM Amplifier Coax Cabling.

m. Admin. Console
   1) System Programming Console.

n. Mass Notification System - Optional
   1) Additional features may be added to the paging system to provide mass notification capabilities.

10. WIRELESS CLOCK SYSTEM

a. This Section includes the Building Wireless Clock System based on OSDM Requirements.

b. Wireless Clocks
   1) Single sided in rooms, double sided in hallways
   2) Wireless Clock Guards as required -- Gym areas, etc.

c. Wireless Transmitter and Receiver and Antennas
   1) Larger buildings may require additional transmitters

d. Wireless Tone Generator and Scheduling System
   1) Includes interface to Paging System

11. CLASSROOM A/V SYSTEMS

a. This Section includes the Classroom and Misc. A/V Systems based on OSDM Requirements.

b. Technology Designer shall coordinate with other Design Professionals for an integrated classroom design to accommodate features such as daylighting.

c. The Design is based on Classroom interactive projectors integrated with the ***Classroom Sound Reinforcement*** system and Digital Media Delivery and Scheduling.

d. The Central Media Server and Scheduling system is NOT included and is assumed to be centrally located at the District's NOC.

e. Classroom Interactive Projectors.
   1) Includes Network controlled/monitored Interactive Projector. Refer to 274119 for Lumen requirements.
   2) Ultra-short throw interactive projector is wall-mounted and integrated with Classroom Sound and other audio/visual sources.
   3) Interactive Projector is integrated with Instructor's PC.
   4) Associated in-wall cabling is included.
   5) Web-based Control shall be achieved either through direct network connectivity at projector or through the use of an external IP/RS-232 and control software.

6) Projector control shall be open source and support multiple projector manufacturers.

7) Wall Bracket for ultra-short throw.

8) ***Interactive projectors shall have the capability to display classroom mobile devices (tablets, iPads, etc.) via wireless interface. Interface shall be open source and support concurrent multiple remote display software.***

f. ***Classroom Sound Reinforcement*** System & Speakers.

1) Includes min of 4 speakers, IR or RF Receiver, Amp and 2 Mics.

2) Integrated with Projector, PC, and video sources.

3) Amp is located at classroom technology center.

g. Classroom A/V Cabling.

h. Classroom Blu-Ray Player.

1) Includes Standard Blu-Ray player located at classroom technology center.

2) Optional if teacher PC is utilized as the classroom DVD player.

i. Central Blu-Ray Player.

1) Blu-Ray Player and Digital Encoder for Central Usage.

j. Bulletin Board Unit.

1) Includes BBS PC and associated Digital Encoder.

k. Media Center Cart

1) Includes 1 Media Center Camera, Cart and Digital Encoder.

l. Flat panel TVs for Selected Rooms.

1) Includes wall mounted flat panel TV and associated STB.

2) Bracket included in Technology TE Package.

m. Provide digital video switcher (HDMI) in rooms where multiple A/V devices and outlets are required to simplify the connection to projector. Locate switcher at the classroom technology center.

12. SPECIALIZED AUDIO SYSTEMS

a. This Section includes the Specialized Audio Systems based on OSDM Requirements.

1) Note that not all systems are required in every building type.

13. REQUIRED SYSTEMS -- IF NO NOC EXISTS

a. This Section includes Systems that must be added to the Estimate if there is NO centralized NOC Location for the District.

b. These systems are generally located at one building in the District and used to serve all District Facilities over a fiber-optic WAN.

c. The following systems are Base Line required systems if no NOC exists.

1) Voice Mail if no Central IP-Enabled or IP-Only PBX Exists.

2) PBX PRI Interface if No Central IP-Enabled or IP-Only PBX Exists.

3) Access Control Software & Console if no Central Unit Exists.

4) Digital Media Management System if no Central System exists.

5) Legacy only - CATV Head End and Coax System. Optional if extending an existing system.

6) If the District has NO Digital Headend for Broadcast Media, then provide a Digital Broadcast Media District Head End – 6 or 12 Channels, as required.

7) Redundant Central IP Call Processing Units if no Central IP-Only PBX Exists.

14. CURRICULUM TECHNOLOGY

a. This section includes various types of technology which specifically relates to use within the educational space by the instructor and students alike. The Technology Designer shall review the various technologies that are available with the School District to determine what combination of system(s) should be selected that will meet the needs of the District, within the allotted Baseline Budget. Note that some systems have minimum base line quantities suggested.

b. Baseline Systems:

1) Digital Media Management System

a) System shall consist of server portal that will enable web-based viewing, uploading, and downloading of digital content; management of title database operations; and logging of system parameters. System to allow for multicasting. System shall be sized according to number of users, number of titles, and network bandwidth. Baseline is 1 per District/School. Optional equipment in educational spaces may include: set-top boxes and digital encoders for video sources.

b) Hosted Solution – Technology Designer to coordinate with the School District if a hosted Digital Media Management System is the District's preference. An OFCC variance shall be obtained if it is determined that a hosted Digital Media Management System is to be implemented. Specific items to review include:

.1 Method of incorporation into the designed technology system(s).

.2 Total Cost of Ownership / Annual Costs, etc.

.3 Training requirements.

.4 Cost for systems and equipment not located in the District and/or owned by the District is not OFCC funded.

c) ***Alternative Digital Media Content Solution - Technology Designer to coordinate with the School District if alternative methods to obtain digital media content is preferred versus local system equipment or a hosted solution. An OFCC variance shall be obtained if it is determined the District prefers to redirect digital media management system budget monies towards other technologies. Specific items to review in the variance submittal includes:***

.1 ***District reason to not include a digital media management system via district owned equipment or hosted solution.***

.2 ***Proposed method to obtain digital media content in District Technology Plan.***

.3 ***Proposed use of re-directed technology budget monies associated with the baseline system, including Total Cost of Ownership/Annual Costs/Training Requirements, if applicable.***

.4 ***Cost for systems and equipment not located in the District and/or owned by the District is not OFCC funded.***

2) Interactive Projectors

a) Interactive Projector – Baseline is 1 per educational space. Shall be mounted within room and provide interface with instructor's workstation in the room and provide the ability to record, save and recall presentations. Includes equipment that can transform any writing surface into an interactive surface. Utilize either wired or wireless connections to the instructor's workstation.

15. OPTIONAL SYSTEMS – Not Baseline Systems

a. This Section includes Optional Systems that can be added to the Estimate based on Local Requirements if the budget permits.

b. Interactive Tablets

1) ***System shall be wireless***, utilizing RF, ***802.11ac,*** or Bluetooth technology. System shall provide ***wireless*** interface with instructor's workstation ***and display device(s)*** in the room ***including*** the ability to record, save and recall presentations. System shall be of the integrated display type or non-display type tablet.

c. Classroom Digital STBs.

1) Includes Digital STB for delivery of IP Video into Classroom.

2) Web-based Control via Projector IP Connection.

3) Bracket included in Technology TE Package.

d. Digital Signage

a. Single unit flat panel displays utilized for Visitor Information, General Way-Finding or Display Education Content.

b. The quantity of Digital Signage shall be minimal and is an Optional System based on budget constraints.

c. Digital Signage unit(s) utilized for video walls, sport or food services applications are not OFCC funded.

e. High School Auditorium

1) The auditorium system is for Districts that construct a large formal auditorium and is only used for special situations.

f. Enhanced Security Package

1) Based on local conditions, select this option to add additional camera coverage and security enclosures for classroom projectors – added cost and based on local conditions.

g. AV Control Systems

1) Central control panels for classroom AV systems. Optional based on budget constraints.

h. TV Studio

i. Area of Refuge Assistance

1) The system shall be a multiplexed intercom system, designed specifically to meet the Area of Refuge Assistance communication requirements of the ADAAG and the OBC. During an emergency, building occupants can use the system to call for assistance from an Area of Refuge to either a local master station or to 911 services through the building telephone system.

2) The system shall consist of remote call-in stations in the areas of refuge (typically stairwells) and a master station. The system shall also provide telephone connections to the master station for access to 911.

3) Note that this system is listed under optional systems category, as it typically would not be installed as a baseline system. It is listed here to advise the Technology Designer to verify building requirements with the Project Architect, to determine if it is a code required system and integrate with the telephone system accordingly.

j. Emergency Responder Radio Coverage

1) The OBC requires approved radio coverage for emergency responders within the building.

2) Note that this system is listed under optional systems category, as it may or may not be required based on several factors.

3) The Technology Designer needs to determine compliance methodology with the Design Professional and AHJ during initial project phases.

k. Interactive Flat Panel Displays (IFPDs)

1) IFPDs may be utilized instead of classroom interactive projectors. Refer to 27 41 19 for requirements.

2) Optional method based on budget constraints.

END OF SECTION

SECTION 8600

ELECTRICAL SYSTEMS

1.01 ELECTRICAL DISTRIBUTION

A. Electrical systems distributed throughout the building shall be based upon the 480-volt or 208-volt, three-phase configuration.

B. Transient voltage serge protection and lightning arrester devices shall be located on main service distribution equipment. Transient voltage surge protection shall be provided on branch distribution electrical equipment serving electronic equipment.

C. Current carrying conductors shall be a minimum No.12 American Wire Gauge. Conductors shall only be copper. Conductor size No. 12 and No. 10 may be stranded or solid type. Conductors larger than No. 10 shall be stranded. Aluminum lugs for terminating copper conductors are acceptable. At the Electrical Design Professional's discretion, along with school district's approval, aluminum conductors may be used for service entrance wiring, branch circuit feeders to panelboards, and distribution panels. Aluminum conductors shall not be used as branch circuit wiring to light fixtures, receptacles, or mechanical/electrical motor circuits. Minimum size aluminum conductor shall be No.6.

D. Current carrying conductors shall be installed in conduit systems conforming to the National Electrical Code.

E. Continuous equipment grounding conductors shall be installed in all circuits bonded to all ground lugs, bussing, switches, receptacles, equipment frames, etc., per the National Electrical Code. The main facility grounding field electrode system to ground shall be 5 ohms or less.

F. Electrical systems main service equipment shall be designed with a 15 percent spare amperage capacity and 20 percent spare space capacity. Panel boards shall be designed up to 80 percent of capacity and be provided with a minimum of six (6) spare over current protection devices. Provide spare over current protection devices in branch distribution panelboards and main service equipment boards.

G. Electrical energy distribution equipment shall be located in dedicated electrical rooms or on mechanical decks. Main electrical service (switchboards) distribution equipment shall not be located in the main heating or cooling generating room. Branch circuit distribution panelboards recessed in corridor walls will not be acceptable.

H. Coordinate service entrance requirements with local utility service companies for electrical energy, telephone, and cable television. Separate entrances may be required depending on placement of utility services.

I. Dry type transformers shall be ***type TP-1 in compliance*** with the Department of Energy Policy Act of 2005 ***or NEMA Premium efficient transformers complying with the*** United States Department of Energy Candidate Standard Level 3 (CSL3) per 10 CFR Part 430 dated July 2004.

J. Electrical branch circuits to five (5) horsepower, 3-phase, and larger motors for air-handling units, exhaust fans, pumps, chillers, and condensing units shall be provided with phase loss protection. Protection shall prevent equipment from single phasing. Phase loss protection equipment shall be integral to starters or variable frequency drives serving the equipment.

K. Voltage drop of feeders between the service entrance equipment and the branch-circuit distribution equipment shall conform to the requirements of the ASHRAE standard 90.1 ***(most recent as adopted by OBC or USGBC.)***

L. Emergency power shall be delivered by an on-site, standby power generator. Provide emergency power distribution to serve required systems per the NEC and the Ohio Building Code including:
1. Emergency egress and exit lighting systems indicated in Section 1.02.
2. Fire Alarm System
3. Security Systems (CCVT, Access and Intrusion.)
4. Telecommunication Rooms UPS Circuits
5. Telephone System
6. Paging and Central Sound System

M. Coordinate emergency circuit location, UPS electrical requirements, and electrical loads with the Technology Designer.

N. The intent of connecting standby power to selected components of the HVAC system is to provide an opportunity to limit damage from freezing weather during a power outage of short duration. The following components are not required to be connected to the standby power source and are optional within budgets:
1. Exterior heat tracing circuits.
2. DDC system controllers and components related to Remote alarming.
3. Air handling unit pre-heat coil (heating coil) run-a-round pumps.
4. Cooling tower basin heaters.
5. Chilled-water circulating pump, when used for Chiller freeze protection.
6. Independent, separate raceway, wiring, and transfer switches shall be provided for emergency life safety systems and no-emergency standby systems.

O. The overall electrical distribution system power factor as seen by the local electric utility company shall be greater than the minimum factor established by local electric utility serving the building.

P. Within the base building electrical cost, the Electrical Design Professional has the option of including a digital sub-metering device within the main electrical switchboard to monitor electrical usage voltage and current.

1.02 LIGHTING

A. Interior instructional spaces shall be artificially illuminated with energy-efficient and high-efficiency fluorescent light fixtures with electronic ballasts and lamps. The Design Professional has the option of providing fluorescent lighting with electronic, digital dimming ballasts connected to photo-electric cells sensing sunlight for automatic illumination level control for daylight harvesting.

B. ***At the Electrical Design Professional's discretion, the interior instructional spaces may be artificially illuminated with fluorescent linear direct/indirect fixtures, pendant mounted. With this option the Design Professional shall give consideration to raising ceiling heights and building structure heights to accommodate distance from the floor elevation to the bottom of pendant fixtures.***

C. ***When daylighting strategies per Chapter 7 are implemented, provide photo-cell control of lights/lamps in the room.***

D. High volume spaces such as gymnasiums ***shall be illuminated with high-efficiency or linear fluorescent-type high-bay fixtures where mounting is 40 feet o less with metal enclosure and wire guard.***

E. ***Other high volume spaces within the facility shall be illuminated using a combination of lamps, ballast and fixtures that are the most energy efficient meeting illumination levels and functionality of the space.***

F. The minimum illumination (footcandle) levels shall conform to the established Illuminating Engineers Society guidelines. See illumination chart at the end of this section. Footcandle calculation shall be developed by using the room cavity ratio method with work plane surface being 30 inches above the floor. Ceiling, wall, and floor material reflectances shall be verified with the Electrical Design Professional.

G. ***Lighting designs shall comply with Illuminating Engineers Society recommended practices entitled "Lighting for Educational Facilities and Sports and Recreational Area Lighting".***

H. Emergency means of egress lighting shall be provided per local and Ohio Building Code requirements. The following areas shall have emergency illumination whether having natural illumination or not:

1. Exits and exist access corridors.
2. Small and large assembly areas.
3. Locker rooms.
4. Student restrooms.
5. Main and other dedicated electrical rooms.
6. Main mechanical room and other mechanical decks.
7. Emergency power equipment location.
8. Administration and other building control areas.
9. Kitchen/student dining.
10. Interior instructional space without natural illumination.
11. Rooms with occupant load over 50 people.
12. Exterior side of exterior exit doors.

I. Light fixtures shall be controlled by switches on a per room basis where fixtures are located. Circuit breakers will not be acceptable for turning lighting "on" and "off".

J. Exterior parking areas shall be illuminated with high-intensity discharge lamp and light-emitting diode (LED) type light fixtures.

K. Auditeria/student dining space shall be equipped with theatrical type lighting controlled by dimmer banks and control consoles.

L. Computer labs shall be illuminated with fluorescent light fixtures equipped with recessed direct/indirect fluorescent fixtures with perforated lens or linear pendant fluorescent direct/indirect fixtures suitable for computer screens, to a visual comfort probability level of 80.

M. In instructional spaces when lighting is provided over the primary instructional wall markerboard, this lighting shall be oriented so the long dimension of the fixture is parallel with markerboard. The remaining lighting in the space may be run parallel or perpendicular to main instructional wall.

N. Provide site lighting per Chapter 3, Section 3211.

O. Light fixtures located in gymnasiums and auxiliary gymnasiums shall be equipped with protective wire guards,

P. Exit signs shall be wall mounted, where possible, in lieu of ceiling mounted.

Q. The use of incandescent type lighting shall be restricted to where recommended by the function of the space. The incandescent lamps shall be rated for 130-volt rugged service.

R. Art rooms shall be provided with supplemental track lighting in middle schools and high schools.

S. Options shall be investigated for control of exterior and interior corridor lighting by direct digital control by the energy management system.

T. Interior lighting shall be controlled by occupancy sensors, automatic timed lighting controlled system or a combination of both to comply with ASHRAE 90.1 ***(most recent as adopted by OBC or USGBC.)***. Exterior lighting shall be controlled by photo-sensor, astronomical time clock, or temperature control system to comply with ASHRAE 90.1 ***(most recent as adopted by OBC or USGBC.)*** to automatically turn lighting off when sufficient daylight is available.

U. Darken fixture above projection surface from multi-level switching in classrooms & labs.

V. Interior and Exterior lighting allowable power densities shall be in compliance with ASHRAE 90.1 ***(most recent as adopted by OBC or USGBC).***

W. Interior lighting allowable power densities shall be 90 percent of allowable under ASHRAE 90.1 ***(most recent as adopted by OBC or USGBC)*** in compliance with ANSI/ASHRAE/USGBC/IEC Standard 189.1-2009 - “Standard for Design of High Performance Green Buildings” article 7.4.6.1. The Design Professional shall include as part of the construction document phase submission the Department of Energy COMcheck interior lighting report documenting compliance.

X. Design Professional’s estimate of performance for light loss factors shall include the following:
   1. Decrease in lamp lumens output due to aging (lamp lumen depreciation-LLD)
   2. Accumulation of dirt and dust on lamp and luminaire surfaces (luminaire dirt depreciation-LDD)
   3. Ballast factor and losses of specific type of lamp ballast.

Y. In stairways of a multi-level building, locate light fixtures for general illumination and emergency at or above landings for ease of lamp replacement.

SCHOOL LIGHTING LEVELS	
ROOM TYPE CLASSIFICATION	RECOMMENDED DESIGN FOOTCANDLES **DIRECT LIGHTING(1)**
ADMINISTRATIVE	
Offices/Receptionist	40
Storage Rooms	15
Restrooms	15
Conference/Resource Rooms	40
Health Clinic	40
Teacher Prep/Workroom	40
CLASSROOMS-GENERAL	40
Art Rooms/Kiln	50
Modular Technology Labs	40
CADD Labs	30
Industrial Tech/Production Labs	50
Computer Labs	30
Graphics Labs	40
Life Skills Labs	50
Science Labs	50
Laundry Rooms	30
Music Rooms	30
Large Group Instruction Rooms	40
MEDIA CENTER	30
Active Areas	30
Inactive Areas	20
ATHLETIC AREAS	
Gymnasium - Elementary School	30
Gymnasium - Middle School	50
Gymnasium - High School	50
Multi-use P.E. Rooms	50
Locker Rooms	15

SCHOOL LIGHTING LEVELS	
ROOM TYPE CLASSIFICATION	RECOMMENDED DESIGN FOOTCANDLES **DIRECT LIGHTING(1)**
STUDENT DINING/AUDITERIAS	
Assembly	20
Stage/Work Lights	30
Make-up/Dressing Rooms	30
Theatrical Control Room	30
Equip room with dimmable ***LED*** lighting offering 10-foot candles of illumination.	
STUDENT DINING(Used for testing)	40
Cooking	50
Food Preparation	50
Serving Line	50
Ware Washing	50
ELECTRICAL ROOMS	20-30
MECHANICAL ROOMS	30
PARKING AREA	1 (3)
DRIVEWAYS	.5 (3)
CIRCULATION AREAS	
Building Entries	5-10 (3)
Corridors	15
Corridors with Lockers	15
Stairways	10
(1) See article 1.02 Lighting, page 8600-5, for lighting maintenance.	
(2) Foot candles shall comply with local health department regulations	
(3) Foot candles shall conform to section 3211.	

CONSIDERATIONS

1. Providing minimum or no building night lights allows background security if undesired entry occurs with visible lights.
2. Parking lot lighting shall be circulated to allow building management system to darken unnecessary lighting during unoccupied periods.

1.03 WIRING DEVICES

A. General purpose use,120-volt duplex receptacles shall be of standard grounded type.

B. Separate receptacles located within instructional spaces shall be provided for general purpose uses and for computer/video technologies.

C. Instructional spaces shall be provided with a minimum of four (4) general use receptacles, as well as double duplex receptacles next to computer/video technologies ports. It is not mandatory to have the double duplex receptacles for any computer/video technology ports that receive power via Power Over Ethernet (POE). Coordinate locations of POE ports with Technology Designer.

D. Each space or room shall be provided with a minimum of one, 120-volt receptacle.

E. General purpose receptacles in corridors shall be spaced a maximum of 50 feet apart.

F. Office areas, conference rooms, and teacher workrooms shall be provided with a minimum of four (4) receptacles.

G. Duplex receptacles within 6 feet of plumbing fixture units shall be ground fault protected. These receptacles shall be protected by a ground fault circuit breaker or an integral ground fault device.

H. A maximum of four (4) computers shall be on a single20-amp, 120-volt electrical circuit.

I. Instructional space lighting shall be controlled by two (2) switches. One switch shall control the inboard lamps and the other switch shall control the outboard lamps in each fixture located in the space. ***For audio/visual presentation mode, place fixture(s) over markerboards/smartboards on the outboard lamp switch.***

J. Key-type switches protected with wire guards shall be used to control lighting in gymnasiums, auxiliary gymnasiums, and locker rooms. Non-protected key switches shall be used to control lighting in corridors, large group restrooms, and other public spaces. Instructional type spaces shall be controlled by toggle-type switches.

K. Provide an exterior, weatherproof ground fault protected duplex receptacle outside each main exterior door.

L. Electrical receptacles serving food service equipment not located against walls shall be mounted above the floor line on pedestal-type mountings.

M. Pre-kindergarten/kindergarten classrooms and their auxiliary spaces shall have duplex tamper-resistant receptacles installed.

N. Interior lighting shall be controlled by occupancy sensors, automatic timed lighting controlled system or a combination of both to comply with ASHRAE 90.1. Exterior lighting shall be controlled by photo-sensor or astronomical time clock to comply with ASHRAE 90.1. to automatically turn lighting off when sufficient daylight is available.

1.04 OUTLET LOCATIONS

ELECTRICAL OUTLET DEVICE TYPE *(1)*	Masonry Wall, Base (Starter) Course Height 4 inch | 8 inch Mounting Height Above Floor to Bottom of Outlet (Device) Box	
Receptacle outlets, microphone outlets (jacks), equipment outlets (jacks), television outlets (jacks), portable telephone outlets, computer outlets, etc.		
* General throughout	20"	20"
* Mechanical equipment rooms	52"	48"
* Above counter tops 30"H	36"	40"
36"H	44"	48"
48"H	52"	56"
* Above backsplash top	2" minimum	2" minimum
* Above radiators	6" minimum	6" minimum
* Above or adjacent to lavatories	44"	48"
* Behind domestic refrigerators	52"	56"
* Behind domestic washers and dryers	36"	32"
* Serving domestic dishwashers	2"	2"
* Wall-mounted telephone outlets	44"	48"
* Telephone/video control	44"	48"
Toggle switches	44"	44"
Recessed motor controllers	60"	56"
Electric panels, terminal cabinets, etc., to center of tub or box	50"	48"
Clocks	Near ceiling	Near ceiling
Pull stations (fire alarm)	44"	44"
Volume controls, call-in switches, doorbell buttons	44"	44"
Horn/strobes (fire alarm)	80"	80"
(1) Locate device to align with projects' established coursing.		

1.05 FIRE ALARM SYSTEM

A. Fire alarm systems shall be of addressable type, incorporating activation devices such as pull stations, smoke detectors, flow switches, duct detectors**,** etc., and audio visual devices such as horns and strobes.

B. System shall comply with the local building code, Ohio Building Code, National Fire Protection Association, and the Americans with Disabilities Act.

C. Main control panel shall be located in the administrative area with remote annunciator station as main entries, conforming to local jurisdiction requirements.

D. Strobe devices shall have their candela light intensity discharge conforming to the Americans with Disabilities Act and local codes.

E. Visual devices shall be located in spaces occupied by students, instructors, and the public. Audible devices shall be located so device delivers sounds levels that are 15 dB over ambient noise levels in areas occupied by students, instructors, or public to conform to Ohio Building Code.

F. System shall be connected electronically by a digital communicator to an independent monitoring agency or company that is not located on building site premises.

G. A manual pull station shall be provided in food service areas, at each exterior door used as means of egress, and at other locations conforming to Ohio Building Code, National Fire Protection Association, and other local codes.

H. Provide a two-way communication system in spaces designated by the Design Professional as “area for a rescue”. Communication system shall conform to the Americans with Disabilities Act.

I. Provide audible alarm devices in high ambient noise areas such as technology production labs, vocal rooms, and instrumental rooms.

J. Protect fire alarm devices located in gymnasiums, auxiliary gymnasiums, and locker rooms with wire guards.

K. Provide Voice-alarm type fire alarm systems per authority having jurisdiction.

1.06 LIGHTNING PROTECTION

A. Within the base building electrical system cost, the Electrical Design Professional has the option of including an Underwriter’s Laboratory (UL) listed and certified lightning protection.

1.07 ENERGY USE

A. All systems shall be designed in compliance with the current ASHRAE Standard 90.1 “Energy Standard for Building Except Low-Rise Residential Buildings”, and the energy usage requirements prescribed by the Ohio Building Code and the Department of Energy.

1.08 SECURITY SYSTEMS

A. Within the base building electrical system cost, provide the following basic security system conduits.

B. Provide conduit rough-in system only for keypad locations, motion sensors, door contacts, and control panel. Route all door contact conduits to an accessible ceiling area. Coordinate conduit routing and quantities with the Security Technology Designer.

1. Access control provisions for at least three (3) doors (main entrance, staff entrance, maintenance entrance) to include conduit at latch or hinge side, exterior wall box for card reader, interior wall box for keypad.

C. A minimum conduit rough-in system design shall include door contact switches**, *door hardware, access control locations at exterior doors, and interior keypad l*ocations.**

1. Conduits at head of selected interior doors for door position switch.

2. Conduits at the head of all exterior doors for door positions switch.

3. Conduits t latch/hinge side or door for electronic door hardware.

4. 120V power at door for electronic door hardware.

5. Wall boxes with conduit for key pad entry stations.

6. Interior and exterior wall boxes with conduit for proximity device readers.

7. Wall boxes with conduit for intercoms and ADA control stations.

D. Provide external junction box for Security camera mounting on Building. Coordinate Locations with Security Technology Designer. Stub ¾ in. conduit from junction box to the associated Telecommunications Cable Tray.

1. Interior and exterior wall boxes with conduit for wall mounted cameras.

E. Motion Detection system is Optional.

1. Coordinate the need for a motion detector conduit system with the Security Technology Designer.

1.09 TECHNOLOGY

A. Within the base building electrical system cost, provide the following basic Technology rough-ins. Coordinate the placement of all Technology Conduits, boxes and outlets with the Technology Design Professional.

B. Provide telecommunications cable tray above corridor ceiling of academic wings.

1. Provide wire basket style cable tray as the primary cable management system above accessible ceilings throughout main and secondary corridors. Cable tray shall be minimum 12”x4” deep, sized at no less than 50% fill. Coordinate all sizes and placement with the Technology Design Professional.

2. Cable trays shall be installed such that there are the following minimum clearances: 12” above, 6” below, 12” on each side.

3. Cable tray shall connect between all intermediate closets Telecommunication Rooms (TRs) and the Main Equipment Room (ER).

4. Provide a continuous path from all Telecommunications Rooms (TRs) back to Main Equipment Room (ER) using 4-inch Conduits, cable trays or a combination of both, as required by conditions.

5. Provide continuous bonding conductor (minimum #6 AWG), in accordance with NEC-250 and TIA/EIA-607, in all cable trays and bond to associated Telecommunications Grounding Busbar (TGB).

6. J-Hooks and similar support mechanisms are not to be used for main and secondary corridors.

C. Junction boxes used for data/voice/video outlets shall be 2-gang, 3 1/2" deep boxes and equipped with a minimum of a 1" conduit, home run to the associated Telecommunications Cable Tray, except where noted by the ***Technology*** Design Professional.

D. Telecommunications Rooms (TRs) shall be provided with a minimum of two (2) 120-volt, 30 Amp circuits for powering rack mounted UPS Units. Quantity and location of circuits will depend upon requirements of Technology Design Professional. If the building has a standby Generator, these circuits shall be attached to the standby power. General use receptacles, as well as double duplex receptacles shall be provided next to computer/video technologies ports.

E. Provide a minimum of two four (4) in. Riser conduits between floors for Telecommunications cables. Coordinate location and quantities with Technology ***Design Professional.***

F. Provide a continuous cable-tray route into the main Equipment Rooms (ER) and associated Telecommunications Rooms (TRs). Transition the Cable Tray to the Overhead rack cable support system in each of these rooms. As an option, provide 4-inch conduits, in lieu of cable tray thru ER and TR walls. In either case, ensure a continuous cable support system to Equipment racks and cabinets.

G. Fire-stop all penetrations.

H. Classroom ***Instructor/Projector Stations***.

1. Coordinate all classroom ultra-short throw interactive projector and AV Systems conduit and power requirements with the Technology Design Professional.

2. The following indicates general classroom requirements, however, verification is required due to variations in specific classroom AV system layouts.

a. Provide one (1), 2-gang, 3-1/2" deep box for the Classroom Instructor station and one (1) quad power outlet at 18" AFF. In addition, provide one (1), 1-gang, 3- ½" deep box at 18" AFF for the Instructor's technology outlet. Place the Instructor's station and technology outlet boxes side by side.

b. Provide one (1), home run, 1-1/4" conduit from ***Instructor*** station 2-gang box to associated Projector Station box. Provide one (1), home run, 1" conduit from ***Instructor*** station 1-gang box to associated Projector Station box. ***Coordinate box requirements of short-throw projector for stowage of A/V cables.***

c. Provide ***a 1 in. pathway from projector box*** for routing of classroom speakers and IR sensor cable to Instructor Station.

d. Provide two (2) 3/4" in. flexible conduits from Projector box to A/V outlet boxes.

3. Provide one duplex electrical outlet located in electrical box ***for the projector***. Provide circuit from the local computer panel that is equipped with TVSS.

4. Provide one (1), home run, 1 in. conduit from Projector box to the associated Telecommunications Cable Tray.

5. For Overhead Mounted Projector, ***in areas other than typical classroom***, provide one (1) Ceiling Tile Projector Mounting Plate with associated electrical outlet knockout and two (2), 1-gang, 3-1/2" deep boxes for Technology use (projector station) and a 1-gang, dual power outlet mounted in the Ceiling Tile Projector Mounting Plate for Projector and associated Set Top Box power. Connect Technology Outlet boxes to Project pull-box with flexible ¾ in. conduits as noted above.

I. Presentation/HDTV Monitor Stations

1. For small viewing rooms, conference rooms, small non-classroom areas, commons areas, etc., requiring ***an HDTV monitor***, provide one (1), 2-gang, 3-1/2" deep box one (1) quad power outlet at 96" in AFF***(verify height with Technology Design Professional.)*** Provide circuit from the local computer panel that is equipped with TVSS.

2. Provide one (1), 2-gang, 3-1/2" deep box for the ***presentation*** station and one (1) quad power outlet at 18" AFF. Place the ***presentation*** station and technology outlet boxes side by side.

3. Provide one (1), 2-gang, 3-1/2" deep box for the ***HDTV Monitor*** station at 96" in AFF.

4. Provide one (1), home run, 1-1/4" conduit from ***presentation*** station to associated ***HDTV Monitor*** station. Provide one (1), home run, 1" conduit from ***HDTV Monitor*** station to the associated Telecommunications Cable Tray.

J. Computer Labs

1. Provide a minimum 4-3/4 inch high center divided surface applied metal raceway in computer labs where equipment is located on perimeter of room.

2. Provide fire-rated poke-thrus for feeding computer furniture/desks in computer labs. Provide separate poke-thrus for electrical outlets and technology outlets.

3. Extend Technology poke-thru to the associated Telecommunications Cable Tray.

4. Coordinate the need, if any, of separate technology cable pathways with the Technology Design Professional.

K. Computer Stations

1. Provide one (1) 1" conduit for each computer workstation/work area outlet location and extend the conduit to the associated Telecommunications cable tray.

L. Classroom Phones

1. ***Where required,*** provide one (1) 1-gang, 3-½" deep box at 48" AFF on wall by Instructor Location or by Classroom Door (Designer to standardize on location District Wide) for Classroom Phone Instrument.

2. Provide one (1), home run, ¾". conduit from the Classroom Phone box to the associated Telecommunications Cable Tray.

M. Wall-Mounted Phones

1. Provide one (1) 1-gang, 3-½" deep box at 48" AFF on wall for wall-mounted Phone Instrument.

2. Provide one (1), home run, ¾". conduit from the Phone box to the associated Telecommunications Cable Tray.

N. Mechanical Room – Building Automation

1. Provide one (1) 1-gang, 3-½" deep box at 48" AFF on wall for HVAC and Building Automation Equipment in Mechanical rooms. Coordinate Box location with Building Automation System Designer.

2. Provide one (1), home run, ¾". conduit from the Building Automation System box to the associated Telecommunications Cable Tray.

O. Elevator Room – Elevator Phone

1. Provide one (1) 1-gang, 3-½" deep box at 48" AFF on wall in Elevator Equipment Room for Servicing Elevator Phone Equipment. Coordinate Box location with Elevator System Designer.
2. Provide one (1), home run, ¾". conduit from the Elevator Equipment Room box to the associated Telecommunications Cable Tray.

P. Electrical and Mechanical Room Phones

1. Provide one (1) 1-gang, 3-½" deep box at 48" AFF on wall in all Electrical and Mechanical Rooms for a Wall-Mounted Telephone. Coordinate final location with Designer.
2. Provide one (1), home run, ¾ in. conduit from the Electrical and Mechanical Room Telephone boxes to the associated Telecommunications Cable Tray.

Q. External Paging Horns

1. Provide external junction box for Paging Horn mounting on Building. Coordinate Locations with Paging Technology Designer. Stub ¾ in. conduit from junction box to the associated Telecommunications Cable Tray.

R. External Wireless Antennas

1. Provide external junction box on Building for External Wireless Antenna Cable Routing. Coordinate Locations with Wireless Technology Designer. Stub 1 in. conduit from junction box to an accessible ceiling area. The associated Wireless Access point must be mounted inside of the building, in an accessible space and within 20-25 feet of the external antenna.

S. A/V Cabinets

1. Provide all wall-mounted, A/V cabinets AND Specialized Audio Cabinets with a quad electrical outlet located inside of associated cabinet. ***Provide circuit from the local computer panel that is equipped with TVSS.***

2. Provide one (1), home run, ¾" conduit from the AV cabinet to the associated Telecommunications Cable Tray.

3. Provide a minimum of one (1), 2" Conduit stubbed from the wall-mounted A/V cabinet to above the ceiling for routing of A/V and Speaker cables. Install bushings on both ends of stub conduit. Coordinate requirements with Technology Designer.

T. Service Providers

1. Provide a minimum of one (1), 4" conduit for Wide Area Network (WAN) from the Main Telecommunications Equipment Room (ER) to the property line.

2. Provide one (1), 4" conduit for cable television (CATV) from the Main Telecommunications Equipment Room (ER) to the property line.

3. Provide one (1), 4" conduit for the telephone from the Main Telecommunications Equipment Room (ER) to the property line.

4. Concrete encase and reinforced all underground entrance conduits.

5. Stub all Entrance conduits up at associated Utility Poles.
6. Note that all Entrance conduits may NOT terminate at same Service Provider Pole. Coordinate location with Service Providers.

7. Provide nylon pull-ropes in all Entrance Conduits.

8. When the Entrance Facility is not located in the Main Technology Equipment Room (ER), (Remodels, for example), provide a minimum of two (2), 4" conduits from the Service Provider Entrance (DEMARC) to the Main Telecommunications Equipment Room (ER).

9. Provide outside system plant (OSP) infrastructure to comply with current BICSI COOSP Standards and Practices. Coordinate specific requirements with each Service Provider.

U. Low Voltage Sleeves

1. Provide one (1), 2 in. sleeve, with bushings, in all block walls, for telecommunications cables, as required.

2. Note, not all of the Telecommunications cables are run in conduits, for example, paging speaker cables are installed using J –Hooks, etc. and require sleeves to enter all rooms.

1.10 TELECOMUNICATIONS GROUNDING

A. Within the base building electrical system cost, provide Telecommunications Grounding/Bonding System in accordance with NEC-250 and TIA/EIA-607 using approved Grounding Hardware. CAD Weld Bonding Conductors to Building Steel.

B. Provide Telecommunications Main Grounding Busbar (TMGB) in Main Equipment Room (ER).

1. All TMGB Connections to be made with double-bolted, Compression style, Grounding Lugs.

2. As a minimum, Bond TMGB to following:

a. Building Steel (minimum #2 AWG insulated copper bonding conductor).

b. Main Electrical Service Ground (minimum #2 AWG insulated copper bonding conductor.)

c. Local Service Panel Ground (minimum #6 AWG insulated copper bonding conductor.)

d. Telecommunications Bonding Backbone (TBB) that connects to TMGB to other TGB's ***(size per BICSI TDMM) – Optional.***

e. Associated Telecommunications Cable Tray(s) ***(continuous #6 AWG bar copper bonding conductor connecting all Cable Tray sections.)***

f. Telecommunications Conduit(s) Entering ER (minimum #6 AWG insulated copper bonding conductor).

C. Provide Telecommunications Grounding Busbar (TGB) in all Telecommunications Rooms (TRs) and AV Equipment Cabinets.

1. All TGB Connections to be made with double-bolted, compression style grounding lugs.
2. As a minimum, Bond TBG to following:

   a. Building Steel (minimum #2 AWG insulated copper bonding conductor).

   b. Local Service Panel Ground (minimum #6 AWG insulated copper bonding conductor.)

   c. Telecommunications Boding Backbone (TBB) that connects TGB to other TGB's and TMGB ***(size per BICSI TDMM) – Optional***.

   d. Associated Telecommunications Cable Tray(s) ***(continuous #6 AWG bare copper bonding conductor connecting all Cable Tray sections.)***

   e. Telecommunications Conduit(s) Entering TR (minimum #6 AWG insulated copper bonding conductor).

D. As a minimum, the Technology Contractor shall bond the following devices to the associated TMGB and TGBs using a minimum #6 AWG insulated copper bonding conductor using compression style lugs:

1. PABX Equipment
2. Equipment Racks and Cabinet
3. TR Cable Ladder and Tray
4. CATV Equipment
5. Lighting and Surge Protectors
6. Telecommunications Devices
7. Coupled Bonding Conductors (CBC's)
8. Backbone Cable Shields
9. Telecommunication and Fiber Cable Shields
10. Antenna Cable Shields
11. Raised Floors
12. Antenna Masts

END OF SECTION

PURPOSE

The purpose of this chapter is to provide a design standard and a level of quality for the systems and materials to be incorporated into new buildings for the Career-Technical Facilities Assistance Program which are not addressed within the Design Manual.

SYSTEMS

Only those major building systems which differ from or are in addition to those stated within the original Design Manual will be listed in this chapter.

In this Career-Technical Section to the Design Manual, no attempt has been made to recommend or describe the means and methods of assembling the various systems.

MATERIALS

With purpose, the materials mentioned in this chapter are generic. No brand or manufacturer's names are stated. Materials other than those mentioned in this chapter, which meet or exceed the characteristics or performance of the stated materials, will be considered, provided adequate information is submitted for approval by the Design Professional and the Ohio Facilities Construction Commission. Alternate materials which exceed the cost of materials indicated in the Career- Technical Section of Opinion of Probable Cost in Chapter 1 will be at the school district's cost.

DESIGN CODES AND STANDARDS

It is recommended that all school spaces used primarily by children shall be designed in accordance with the proposed new ADA regulations for children ages 3 through 12. Areas used primarily by students 13 and over and by adults are to be designed in accordance with current ADA regulations. All buildings should adhere to all current codes and standards. Efforts in design should be made to reduce energy consumption to at least 30% below international energy conservation code 2000.

DESIGN FOR SAFETY / SECURITY

Design Professionals and educators are encouraged to embrace the concept known as Crime Prevention Through Environmental Design (CPTED). CPTED encourages planners to include safety elements into a building design at the earliest stages. Examples are administration control at main entrances, avoiding corridors with too many hidden spots, and fewer entrances.

ENERGY USAGE

All systems shall be designed in compliance with ASHRAE STANDARD 90.1 “Energy Standard for Building Except Low-Rise Residential Buildings”, and the energy usage requirements prescribed by the Ohio Building Code and the Department of Energy.

THIS PAGE HAS BEEN INTENTIONALLY LEFT BLANK.

A. APPLICATION

1. Used at high bay labs only (Programs 5-7).

2. Locate 8'-0" above finished floor and higher.
   Provide masonry below metal panels.

B. COMPONENTS

1. Exterior Finish
   a. 24 gauge stucco embossed G-90 galvanized steel with high performance finish

2. Core
   a. Foamed in-place urethane insulation.

3. Interior Finish
   a. 24 gauge white stucco embossed G-90 galvanized steel.

C. PERFORMANCE

1. Features
   a. Impact resistant
   b. Moisture resistant
   c. Thermal resistant

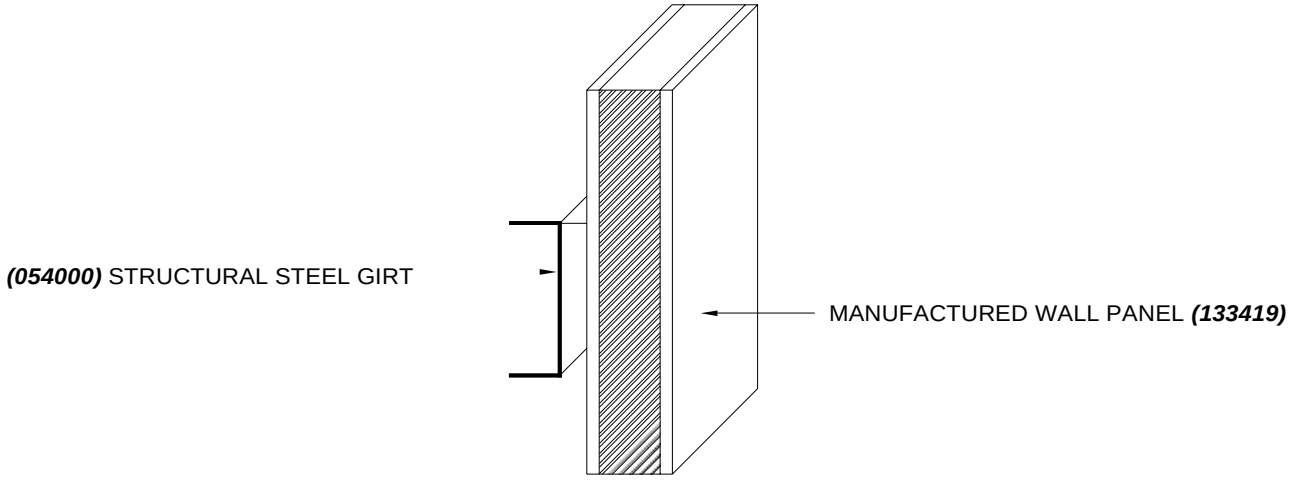

Manufactured Wall Panel
Figure A-1

THIS PAGE HAS BEEN INTENTIONALLY LEFT BLANK.

METAL ROOF WITH BATT INSULATION

A. APPLICATION

1. Steep Roofing

B. COMPONENTS

1. Roof Membrane
   a. Metal roof
2. Roof Insulation
   a. Batt/blanket insulation
3. Vapor Retarder
   a. Where required. Refer to Chapter 9.
4. Structural Support
   a. Roof purlins
5. Slope
   a. Minimum .25:12

C. PERFORMANCE

1. Features
   a. Impact resistant
   b. Moisture resistant
   c. Thermal resistant

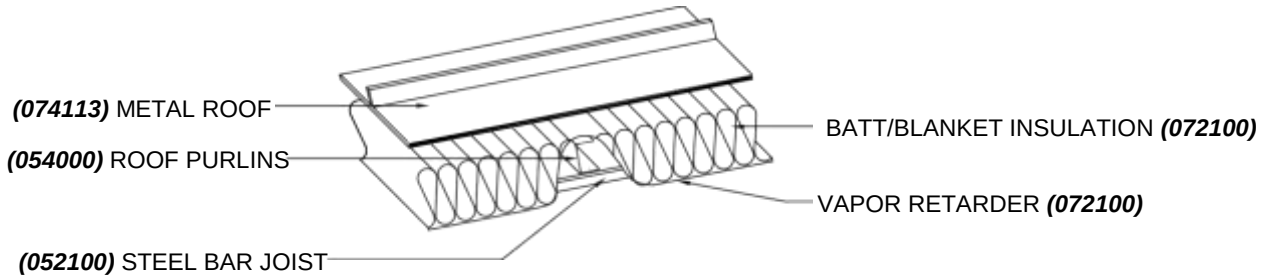

Metal Roof with Batt Insulation
Figure A-1

THIS PAGE HAS BEEN INTENTIONALLY LEFT BLANK.

1.07 PLUMBING FIXTURES/PLUMBING SPECIALTIES (Add the following)

L. Floor drains shall be installed in each large group restroom, locker room, mechanical room, kitchen area, and high - bay labs. Provide a sediment bucket in the floor drain if conditions exist where solids may enter the drain. Provide ***an exterior*** oil interceptor at drains if conditions exist where oil, gasoline, etc. may enter the drain.

P. Install a cold water hose bibb in each large group restroom, locker room and mechanical room. The hose bibb shall be ***recessed*** behind a lockable door in restrooms and locker rooms, with access by a removable key handle. All high - bay labs shall receive keyed hose bibbs.

W. Provide trench drains on interior side of all overhead doors located within high - bay labs. Provide a sediment bucket in the drain if conditions exist where solids may enter the drain. Provide ***an exterior*** oil interceptor at drains if conditions exist where oil, gasoline, etc. may enter the drain.

THIS PAGE HAS BEEN INTENTIONALLY LEFT BLANK

SECTION 1.05: AIR FLOW RATES FOR BUILDING SPACES (Add the following)

	SPACE	SUPPLY AIR	EXHAUST AIR
14.	Professional Labs (Program Types 1-4)	6 air changes/hour	N/A
15.	High Bay Labs (Program Types 5-7)	6 air changes/hour	0.5 cfm/SF

* See program summaries in Chapter 6 for additional HVAC requirements.

THIS PAGE HAS BEEN INTENTIONALLY LEFT BLANK

1.02 LIGHTING (Add the following)

B. High volume space such as student dining, high - bay labs, etc. shall be illuminated with high-efficiency, high-intensity discharge lamp type light fixtures. Quartz restrike options shall be incorporated into some fixtures to provide an average of 2 footcandles of illumination during the cool-down/warm-up (restrike) period caused by momentary electrical outages.

SCHOOL LIGHTING LEVELS (add the following)

Room Type Classification	1993 IES	Recommended Minimum Footcandles
Professional Labs (program types 1-4)	-	***50***
High Bay Labs (program types 5-7)	-	60