OHIO SCHOOL DESIGN MANUAL
Ohio School Facilities Commission

TABLE OF CONTENTS

Chapter 9: Specifications
9100 Introduction

9101 General Requirements
- 013100 Project Management and Coordination
- 014000 Quality Requirements
- 015000 Temporary Facilities and Controls
- 015800 Project Identification
- 017419 Construction Waste Management and Disposal
- 017700 Closeout Procedures
- 018113 Sustainable Design Requirements
- 019100 Commissioning

9102 Existing Conditions
- 024116 Structural Demolition
- 024119 Selective Structural Demolition
- 025000 Site Remediation

9103 Concrete
- 031119 Insulating Concrete Forming
- 033000 Cast-In-Place Concrete
- 033510 Polished Concrete Finishing
- 033519 Colored Concrete Finishing
- 034100 Precast Structural Concrete
- 034500 Precast Architectural Concrete
- 035113 Cementitious Wood Fiber Decks
- 035216 Lightweight Insulating Concrete

9104 Masonry
- 042000 Unit Masonry
- 042250 Autoclaved Aerated Concrete (AAC) Masonry
- 042700 Glass Masonry Units
- 047200 Cast Stone

9105 Metals
- 051200 Structural Steel Framing
- 052100 Steel Joists Framing
- 053100 Steel Decking
- 054000 Cold-Formed Metal Framing
- 055000 Metal Fabrications
- 055100 Metal Stairs
- 055213 Pipe and Tube Railings

9106 Wood, Plastics, and Composites
- 061000 Rough Carpentry
- ***061600 Sheathing***
- 062000 Finish Carpentry
- 064023 Interior Architectural Woodwork

9107 Thermal and Moisture Protection

071000 Dampproofing and Waterproofing
072100 Thermal Insulation
072700 Air Barriers
073113 Asphalt Shingles
074113 Metal Roof Panels
074213 Metal Wall Panels
074216 Insulated-Core Metal Wall Panels
074219 Metal Plate Wall Panels
074243 Composite Wall Panels
075000 Membrane Roofing
075113 Built-Up Asphalt Roofing
075200 Modified Bituminous Membrane Roofing
075323 EPDM Roofing
075400 Thermoplastic Membrane Roofing
075700 Coated Foamed Roofing
076200 Sheet Metal Flashing and Trim
077100 Roof Specialties
077200 Roof Accessories
078100 Applied Fireproofing
078400 Firestopping
079200 Joint Sealants

9108 Openings

081113 Hollow Metal Doors and Frames
081116 Aluminum Doors and Frames
081416 Flush Wood Doors
081613 Fiberglass Doors and Frames
083113 Access Doors and Frames
083320 Overhead Coiling Doors and Grilles
083613 Sectional Doors
084413 Glazed Aluminum Curtain Walls
085113 Aluminum Windows
085200 Wood Windows
085410 Fiberglass Windows
085656 Security Window Screens / Glazing
086300 Metal-Framed Skylights
087100 Door Hardware
087113 Automatic Door Operators
088000 Glazing
088300 Mirrors
089000 Louvers and Vents

9109 Finishes

092116 Gypsum Board Assemblies
092400 Portland Cement Plastering
092513 Acrylic Plaster Ceilings
093000 Tiling
095113 Acoustical Panel Ceilings
096400 Wood Flooring
096466 Wood Athletic Flooring
096500 Resilient Flooring
096516 Linoleum Flooring
096566 Resilient Athletic Flooring
096723 Resinous Flooring
096766 Fluid-Applied Athletic Flooring
096813 Tile Carpeting

096816 Sheet Carpeting
096900 Access Flooring
098000 Acoustic Treatment
099100 Painting
099300 Staining and Transparent Finishing
099419 Multicolored Coating System
099600 High-Performance Coatings

9110 Specialties
101100 Visual Display Surfaces
101200 Display Cases
101400 Signage
101426 Post and Panel/Pylon Signage
101453 Traffic Signage
102113 Toilet Compartments
102123 Cubicles
102213 Wire Mesh Partitions
102226 Operable Partitions
102813 Toilet Accessories
104400 Fire Protection Specialties
105113 Lockers
105613 Metal Storage Shelving
105626 Mobile Storage Shelving
107500 Flagpoles

9111 Equipment
111300 Loading Dock Equipment
113100 Residential Equipment
114000 Food Service Equipment
115123 Library Stack Systems
115213 Projection Screens
115313 Laboratory Fume Hoods
116143 Stage Curtains
116623 Gymnasium Equipment
116643 Interior Scoreboards
118226 Waste Compactors and Destructors
119200 Art Room Equipment - Kilns

9112 Furnishings
122113 Horizontal Louver Blinds
122413 Roller Window Shades
123550 Educational Casework
123553 Laboratory Casework
124813 Entrance Floor Mats and Frames
124816 Entrance Floor Grilles
126600 Telescoping Stands
129100 Site Furnishings

9113 Special Construction
134814 Sound Barriers

9114 Conveying Equipment
142100 Electric Traction Elevators
142400 Hydraulic Elevators

9121 Fire Suppression

210501 Common Work Results for Fire Suppression
211000 Water-Based Fire-Suppression Systems

9122 Plumbing

220501 Common Work Results for Plumbing
220519 Meters and Gages for Plumbing Piping
220533 Electric Self-Regulating Hot Water Temperature Maintenance Cable
221116 Domestic Water Piping System
221119 Plumbing Piping Specialties
221123 Plumbing Pumps and Accessories
221316 Sanitary Piping System
221323 Grease/Oil/Acid Interceptors
221413 Storm Piping System
221500 Compressed Air System
223100 Domestic Water Softener Equipment
223200 Domestic Water Filtration Equipment
223400 Domestic Water Heating System
224000 Plumbing Fixtures
226313 Gas Piping Systems

9123 Heating, Ventilating, and Air Conditioning

230501 Common Work Results for HVAC
230507 HVAC Piping
230514 Variable Frequency Drives
230519 Meters and Gages for HVAC Piping
230523 General Duty Valves for HVAC Piping
230525 Roof Curbs
230529 Hangers and Supports for HVAC
230548 Vibration and Seismic Control for HVAC
230553 Identification for HVAC
230593 Testing, Adjusting, and Balancing for HVAC
230719 HVAC Insulation
230923 HVAC Direct Digital Controls
230993 Sequence of Operation for HVAC
231101 Liquid Petroleum Gas Piping
232113 HVAC Piping Specialties
232117 Glycol Heat Transfer Fluid
232119 HVAC Flow Control
232123 HVAC Hydronic Pumps
232300 Refrigerant Piping
232500 HVAC Water Treatment
233113 Low-Pressure Ductwork
233115 Medium-Pressure Ductwork
233117 Flexible Ductwork
233300 Ductwork Accessories
233313 Exterior Wall Louvers
233400 HVAC Fans
233423 Rooftop Intake, Exhaust,& Relief Ventilators
233513 Dust Collection System
233515 Welding Exhaust System
233600 Variable Air Volume Terminals
233713 Air Outlets and Inlets
233716 Fabric Air Distribution Devices
233718 Underfloor Air Distribution System
233800 Kitchen Hood Ventilation System
234323 Air Cleaning System

235100 Breeching, Chimneys, and Stacks
235213 Electric Boilers
235216 Flue Gas Condensing Boilers
235223 Cast Iron Boilers
235225 Steel Firebox Boilers
235233 Flexible Water Tube Boilers
235239 Packaged Firetube Boilers
235700 Heat Exchangers
236213 Refrigerant Condensing Units
236215 Multiple-Compressor Refrigerant Condensing Units
236416 Packaged, Centrifugal Water Chiller
236423 Packaged, Scroll Water Chiller
236426 Packaged, Rotary Screw Water Chiller
236440 Refrigerant Monitoring Systems
236500 Packaged Cooling Towers
236533 Closed Circuit Fluid Coolers
237119 Ice Storage System
237200 Air to Air Energy Recovery Equipment
237313 Modular Indoor Air Handling Units
237323 Custom Indoor Air Handling Units
238113 Unitary Air Conditioning Equipment
238123 Computer Room Air Conditioners
238146 Water Source Heat Pumps
238156 Ground Source Heat Pumps (Geothermal)
238219 Fan Coil Units – Four Pipe
238223 Unit Ventilators – Four Pipe
238233 Convectors
238239 Cabinet Unit Heaters
238240 Propeller Unit Heaters
238316 Radiant Heating Hydronic System

9126 <u>Electrical</u>
260513 Medium Voltage Cables 2001 to 35,000 v
260519 Low Voltage Electrical Power Conductors and Cables
260526 Grounding and Bonding of Electrical Systems
260529 Hangers and Supporting Devices
260533 Raceway and Boxes for Electrical Systems
260536 Cable Tray for Electrical Systems
260543 Underground Ducts and Raceways for Electric Systems
260923 Lighting Control Devices
261200 Medium Voltage Transformers
261300 Medium Voltage Switchgear
262200 Low Voltage Transformers
262413 Switchboards
262416 Panelboards
262419 Motor Control Centers
262726 Wiring Devices
262813 Fuses and Fuse Holders
262816 Enclosed Switches and Circuit Breakers
262913 Enclosed Controllers
263213 Package Engine Generators
263600 Transfer Switches
264313 Transient Voltage Suppression for Low-Voltage Electrical Power Circuits
265100 Interior Lighting
265561 Theatrical Dimming System
265600 Exterior Lighting

9127 Communications

270526 Grounding and Bonding for Communications Systems
271100 Communications Equipment Room Fittings
271313 Communications Copper Backbone Cabling
271323 Communications Optical Fiber Backbone Cabling
271513 Communications Copper Horizontal Cabling
271543 Audio-Video Communications Horizontal Transport System
272100 Data Communications Network Equipment
272133 Data Communications Wireless Access Points
273113 IP-Enabled PABX System
273123 IP Only PABX System
274119 Video Display Equipment
274125 Digital Media Management System
275121 Student Dining / Auditeria Sound Reinforcement System – High School
275122 Student Dining / Cafeteria Sound Reinforcement System
275123 Central Sound and Paging System
275124 Gymnasium Sound Reinforcement System
275125 Music Room Audio Program Playback System - Middle School
275126 Music Room Audio Recording/Playback System - High School
275127 Classroom Sound Reinforcement System
275313 Clock Systems

9128 Electronic Safety and Security

281300 Access Control System
281600 Intrusion Detection System
282300 Video Surveillance System
282600 Area of Refuge Intercommunication System
283111 Digital, Addressable Fire-Alarm System

9131 Earthwork

311000 Site Clearing
312000 Earth Moving

9132 Exterior Improvements

321216 Asphalt Paving
321313 Concrete Paving
321314 Pervious Concrete Pavement
321443 Porous Unit Paving
321816 Playground Surfacing
323113 Fences and Gates
329200 Turf and Grasses

9133 Utilities

330513 Manholes and Structures
331000 Water Utilities
333000 Sanitary Sewerage Utilities
334000 Storm Drainage Utilities
334600 Subdrainage

See additional resources for updates to 9127 and 9128

Chapter 9: Specifications (Career-Technical)

9200 Introduction

9203 Concrete
033516 Concrete Floor Hardener/Sealer

9206 Wood, Plastics, and Composites
060565 Slatwall Paneling
068200 Glass Fiber-Reinforced Plastic

9208 Openings
083416 Bottom Roll Slide Hanger Doors
083436 Revolving Darkroom Doors

9209 Finishes
096000 Wood Dance Floor
099600 High Performance Coatings

9211 Equipment
112713 Dark Room Equipment
113100 Residential Appliances
116135 Pipe Grid
116615 Ballet Bars
116800 Play Field Equipment and Structures

9213 Special Construction
131900 Kennels and Animal Shelter Equipment
133413 Glazed Structures (Greenhouses)
133419 Metal Building Systems

9223 Heating, Ventilating, and Air Conditioning
233500 Vehicle Fume Exhaust Equipment

9241 Material Processing and Handling Equipment
412223 Hoists and Cranes

INTRODUCTION

Specifications define the qualitive requirements for products, materials, and workmanship upon which the content is based. They are organized into ***50*** Divisions and ***6*** digit numbering system. Section titles have been closely coordinated with the numbering system established in CSI's ***new*** Masterformat ***2004*** Edition. In certain instances, section titles vary slightly from those recommended, but only where necessary to make them correspond more closely to text subject matter.

The specifications are no more than outlines complied to establish minimum quality requirements. They do not cover all materials required for a complete Project and do not attempt to include every possible variable, particularly where doing so would require an almost unlimited number of choices. These specifications are not to be used as bid documents.

Specifying methods include both performance (a statement of required results with criteria for verifying compliance, but without unnecessary limitations on the methods for achieving the required results) and reference standard (requirements set by authority, custom, or general consensus and are established as accepted criteria). There was no attempt to establish these specifications based on proprietary specifications which identify the desired products by manufacturer's name, brand name, model numbers, type designation, or other unique characteristics.

Section format conforms to 3 part arrangement developed by CSI and accepted by the Design Professionals to achieve uniformity in locating and organizing specification content.

Streamlined language is used where possible to describe requirements for products, systems, and processes. In these instances a generic term is punctuated by a colon and then followed by a list of requirements without a linking verb such as "shall be" or "provide" which is implied by colon.

Spelling and punctuation conform as closely as possible to current standards of usage. If conflicts occur between spelling of words in the dictionary versus industry practices, the latter takes precedence.

Minimums and maximums are defined in text only where possibility of confusion exists. Otherwise, because of the nature of this document, it shall be assumed items indicated in documents are guidelines and shall be adhered to, unless discussed with state authority.

Abbreviations included in text are defined in Chapter 1.

Demolition: Although Chapter 9 does not include an outline specification on demolition, special emphasis should be placed on recycling. With a demolition project, a recommendation should stress the need to recycle ceiling tile, carpet, and other materials where recycling programs are available.

THIS PAGE HAS BEEN INTENTIONALLY LEFT BLANK.

01 DIVISION

GENERAL REQUIREMENTS

TABLE OF CONTENTS

DIVISION 01: GENERAL REQUIREMENTS

013100	Project Management and Coordination
014000	Quality Requirements
015000	Temporary Facilities and Controls
015800	Project Identification
017419	Construction Waste Management and Disposal
017700	Closeout Procedures
018113	Sustainable Design Requirements
019100	Commissioning

SECTION 013100

PROJECT MANAGEMENT AND COORDINATION

GENERAL GUIDELINES

1.1 SECTION INCLUDES

A. Administrative guidelines for project management and coordination.

1.2 BUREAU OF BUILDING CODE COMPLIANCE MEETING

A. Bureau of Building Code Compliance Meeting: CM will schedule a Building Code Compliance with Authorities with Jurisdiction, [Division of Industrial Compliance, 6606 Tussing Road, Reynoldsburg, Ohio 43068, (614)644-3334, www.com.ohio.gov.,] at a time convenient to Owner, CM, and A/E, after execution of the Agreement and before beginning any on-site construction activities. Hold conference at Project Site or another convenient location. Conduct the meeting to review inspection responsibilities and personnel assignments.

1. Attendees: Authorized representatives of Owner, CM, A/E, and their consultants; Contractor and its superintendent; major subcontractors; testing agency; and other concerned parties shall attend the conference. All participants at conference shall be familiar with project testing and inspection requirements.

1.3 PRE-INSTALLATION CONFERENCES

A. Pre-installation Conferences: A/E will schedule and conduct a pre-installation conference at Project Site before each construction activity that requires coordination with other construction and as indicated in the Contract Documents.

1. Attendees: Installer and representatives of manufacturers and fabricators involved in or affected by the installation and its coordination or integration with other materials and installations that have preceded or will follow, shall attend the meeting. Advise A/E and CM of possible meeting date a minimum of 72 hours in advance. A/E will schedule meeting.

LESSONS LEARNED

3.1 Modern technology has contributed to the development of many new building products. These new products and the creative use of existing materials by some architects have lead to many innovative construction procedures. As architects take advantage of the increasing availability of new materials, complicated installation details have become standard. Consequently, many building projects now include complex assemblies of materials that require more-than-normal care to execute.

3.2 Difficult material installations and complex assemblies usually demand considerable skill on the part of the Installer. When two or more trades are involved in an installation, close coordination is necessary to achieve satisfactory results. However, when assembly or installation is difficult or intricate, close coordination between the trades is *essential* to avoid problems or material failures. This is true of the mason and roofer for coordination of the thru-wall flashing at roof-wall intersections. It is recommended that special coordination meetings be required to address issues necessary to assure quality construction.

A. When a building project requires an unusual assembly of materials, a pre-installation conference is usually advisable to review installation procedures and establish responsibilities. Pre-installation conferences are also desirable for many routine construction operations such as built-up roofing and waterproofing. To avoid problems and material failures, many architects require pre-installation conferences to coordinate the installation of specific products or systems.

3.3 Pre-installation Conferences as Quality Assurance: Many architects have found that the pre-installation conference is their first opportunity to assess the Installer's understanding of the quality requirements in the specifications, and bring to their attention any special requirements or experience from past projects that may help avoid quality issues and rejected work. Through participation in pre-installation conferences and in reviewing of mockups, the Architect is able to assist the Owner in obtaining a better quality installation; consideration should be given those work results that would most benefit from a requirement for a pre-installation conference, as the conferences require a time and cost commitment from the Contractor and from the Architect.

3.4 Advantages: During a pre-installation conference, participants review conditions under which they will perform their work, resolve minor problems that may otherwise hinder or delay progress, and discuss procedures that require cooperation.

A. A pre-installation conference should not be held just to make the parties aware of each other's problems; these issues should be discussed at a regular progress meeting before installation begins.

3.5 Timing: A pre-installation conference should not be scheduled before preliminary work is complete. However, it should be held early enough to resolve potential problems; one week before installation begins is sufficient for many installations. For complex installation involving many trades and critical substrates, several sessions may be needed to clarify all issues.

3.6 Attendees: The Contractor's superintendent, the Architect's field representative or project manager, the Construction Manager, the subcontractors, and materials suppliers should attend pre-installation conferences. Often, representatives of various manufacturers, officials of testing agencies, and local building inspection officials also attend.

3.7 Location: A pre-installation conference is typically held at the jobsite to enable participants to review field conditions and evaluate critical substrates and other preparatory work, if necessary.

3.8 Agenda: The following issues are usually discussed at pre-installation conferences:

A. Procedures Review: Participants in a pre-installation conference review essential procedures the parties must follow, from initial preparation to protecting the completed installation. The conference gives participants an opportunity to review the sequence of operations. Some projects require special procedures for an installation, and this meeting gives the parties an opportunity to ensure that everyone understands these special procedures as well as their responsibilities regarding following them.

B. Conditions Review: Participants in a pre-installation conference should review pertinent conditions about installation, including timely access to the Work and environmental concerns. This conferences gives participants an opportunity to review the status of previously completed work before installation begins. If unsatisfactory conditions are

discovered, the party responsible for the problem must take corrective action to remedy the situation without delaying progress.

C. Schedules Check: A final review of all schedules for installation is a major agenda issue for pre-installation conferences. For large installations, staggered material delivery may help maintain progress without creating storage problems on-site. However, staggered material delivery must be carefully coordinated with work progress at all stages to avoid material storage at critical points in the installation process.

D. Mockup Evaluation: On many projects, architects require the construction of mockups to establish the standard of performance of some critical construction operations. Pre-installation conferences give the participants an opportunity for a final review and evaluation of the mockups.

END OF SECTION

SECTION 014000

QUALITY REQUIREMENTS

GENERAL GUIDELINES

1.1 SECTION INCLUDES

A. Administrative guidelines for quality assurance and quality control.

1.2 PRIME CONTRACTORS QUALITY CONTROL PLAN

A. Quality Control Plan, General: Each Prime Contractor shall submit quality-control plan not less than five days prior to preconstruction conference. Submit in format acceptable to Architect. Identify personnel, procedures, controls, instructions, tests, records, and forms to be used to carry out Contractor's quality-assurance and quality-control responsibilities. Coordinate with Contractor's construction schedule.

B. Quality Control Personnel Qualifications: Engage qualified full-time personnel trained and experienced in managing and executing quality-assurance and quality-control procedures similar in nature and extent to those required for Project.
   1. Project quality control manager may also serve as Contractor superintendent or foreman.

C. Submittal Procedure: Describe procedures for ensuring compliance with requirements through review and management of submittal process. Indicate qualifications of personnel responsible for submittal review.

D. Testing and Inspection: Include in quality control plan a comprehensive schedule of Work requiring testing or inspection, including the following:
   1. Contractor-performed tests and inspections including subcontractor-performed tests and inspections. Include required tests and inspections and Contractor-elected tests and inspections.
   2. Special inspections required by authorities having jurisdiction and indicated on the "Statement of Special Inspections."
   3. Owner-performed tests and inspections indicated in the Contract Documents including test and inspections indicated to be performed by the Commissioning Authority.

E. Continuous Inspection of Workmanship: Describe process for continuous inspection during construction to identify and correct deficiencies in workmanship in addition to testing and inspection specified. Indicate types of corrective actions to be required to bring work into compliance with standards of workmanship established by Contract requirements and approved mockups.

F. Monitoring and Documentation: Maintain testing and inspection reports including log of approved and rejected results. Include work Architect has indicated as nonconforming or defective. Indicate corrective actions taken to bring nonconforming work into compliance with requirements. Comply with requirements of authorities having jurisdiction.

1.3 QUALITY ASSURANCE

A. Mockups: Before installing portions of the Work requiring mockups, build mockups for each form of construction and finish required to comply with the following requirements, using material indicated for the completed Work:
   1. Build mockups in locations and of size indicated or, if not indicated, as directed by Architect.
   2. Notify Architect and Construction Manager seven days in advance of dates and times when mockups will be constructed.
   3. Employ supervisory personnel who will oversee mockup construction. Employ workers that will be employed during the construction at the Project.
   4. Demonstrate the proposed range of aesthetic effects and workmanship.
   5. Obtain Architect's approval of mockups before starting work, fabrication, or construction.
      a. Allow seven days for initial review and each re-review of each mockup.
   6. Maintain mockups during construction in an undisturbed condition as a standard for judging the completed Work.

LESSONS LEARNED

3.1 Mockups are full-size representations of the construction, materials, and finishes required by the Contract Documents. They can be used to verify selections made under Sample submittals, to demonstrate aesthetic effects, to provide coordination between elements, and to demonstrate the qualities of products and workmanship. Mockups are especially useful when quality of workmanship is a particular concern and is difficult to specify and enforce through reference to industry standards. For all but the simplest of mockups described in the specifications, Drawings delineating the extent and location of mockups are typically provided. The Architect may wish to observe the construction of mockups. The Contractor's construction schedule should indicate adequate time for construction and approval of mockups. Extensive mockups should also be included as a line item in the schedule of values.

A. Mockups may simply be a portion of the Work completed for review prior to proceeding, or they may be extensive freestanding construction intended for demolition upon completion and acceptance of the Work. The individual specification sections indicate which type of mockup applies to which element of the Work.

B. Freestanding masonry mockups can be excellent opportunities for "Quality Assurance" measures to verify flashing.

C. Integrated exterior mockups incorporate mockup elements specified in several Specification Sections into a single, usually free-standing, assembly that also demonstrates successful interface between different materials and systems. Integrated mockups may be a valuable tool in enhanced building commissioning.

D. Room mockups are full-size representative construction of one or several typical room types that may incorporate all specified materials, including fixtures and equipment. Room mockups are often used in projects to provide final verification of specified materials as well as to demonstrate an acceptable level of workmanship.

END OF SECTION

SECTION 015000

TEMPORARY FACILITIES AND CONTROLS

GENERAL GUIDELINES

1.1 SECTION INCLUDES

A. Administrative guidelines for temporary utilities, support facilities, and security and protection facilities.

1.2 TEMPORARY UTILITY INSTALLATION

A. Heating and Cooling: Provide temporary heating and cooling required by construction activities for curing or drying of completed installations or for protecting installed construction from adverse effects of low temperatures or high humidity. Select equipment that will not have a harmful effect on completed installations or elements being installed.

B. Isolation of Work Areas in Occupied Facilities: Prevent dust, fumes, and odors from entering occupied areas.

1. Prior to commencing work, isolate the HVAC system in area where work is to be performed in accordance with approved coordination drawings.
   a. Disconnect supply and return ductwork in work area from HVAC systems servicing occupied areas.
   b. Maintain negative air pressure within work area using HEPA-equipped air filtration units, starting with commencement of temporary partition construction, and continuing until removal of temporary partitions is complete.
2. Maintain dust partitions during the Work. Use vacuum collection attachments on dust-producing equipment. Isolate limited work within occupied areas using portable dust containment devices.
3. Perform daily construction cleanup and final cleanup using approved, HEPA-filter-equipped vacuum equipment.

C. Ventilation and Humidity Control: Provide temporary ventilation required by construction activities for curing or drying of completed installations or for protecting installed construction from adverse effects of high humidity. Select equipment that will not have a harmful effect on completed installations or elements being installed. Coordinate ventilations requirements to produce ambient condition required and minimize energy consumption.

1. Provide dehumidification system when required to reduce substrate moisture levels to levels required to allow installation, application of finishes, and minimize the potential for mold growth.

1.3 MOISTURE AND MOLD CONTROL

A. Contractor's Moisture-Protection Plan: Avoid trapping water in finished work. Document visible signs of mold that may appear during construction.

B. Exposed Construction Phase: Before installation of weather barriers, when materials are subject to wetting and exposure and to airborne mold spores, protect as follows:
   1. Protect porous materials from water damage.
   2. Protect stored and installed material from flowing or standing water.
   3. Keep porous and organic materials from coming into prolonged contact with concrete.
   4. Remove standing water from decks.
   5. Keep deck openings covered or dammed.

C. Partially Enclosed Construction Phase: After installation of weather barriers, but before full enclosure and conditioning of building, when installed materials are still subject to infiltration of moisture and ambient mold spores, protect as follows:
   1. Do not load or install drywall or other porous materials or components, or items with high organic content, into partially enclosed building.
   2. Keep interior spaces reasonably clean and protected from water damage.
   3. Periodically collect and remove waste containing cellulose or other organic matter.
   4. Discard or replace water-damaged material.
   5. Do not install material that is wet.
   6. Discard, replace, or clean stored or installed material that begins to grow mold.
   7. Perform work in a sequence that allows any wet materials adequate time to dry before enclosing the material in drywall or other interior finishes.

D. Controlled Construction Phase of Construction: After completing and sealing of the building enclosure but prior to the full operation of permanent HVAC systems, maintain as follows:
   1. Control moisture and humidity inside building by maintaining effective dry-in conditions.
   2. Use permanent HVAC system to control humidity.
   3. Comply with manufacturer's written instructions for temperature, relative humidity, and exposure to water limits.
      a. Hygroscopic materials that may support mold growth, including wood and gypsum-based products, that become wet during the course of construction and remain wet for 48 hours are considered defective.
      b. Measure moisture content of materials that have been exposed to moisture during construction operations or after installation. Record daily readings over a forty-eight hour period. Identify materials containing moisture levels higher than allowed. Report findings in writing to Architect.
      c. Remove materials that can not be completely restored to their manufactured moisture level within 48 hours.

LESSONS LEARNED

3.1 Temporary Utilities

A. Temporary Heating and Cooling: Construction procedures require minimum temperatures for proper curing or drying. Architects should specify minimum temperatures for construction operations in the Sections for specific activities. Includes requirements for minimum temperatures in enclosed portions of the building to forestall the possibility of damage to the completed construction.

3.2 Security and Protection

A. Work in facilities may require special considerations for dust control and isolation of the building HVAC system. In addition to dust-tight temporary partitions, dust controls at openings to the work area, walk-off mats, negative pressurization, and independent temporary ventilation may be required.

B. Temporary fire-protection provisions in the Section Text are essential but basic. Contractors must keep temporary fire protection operational until permanent fire protection is available. If permitted by the Owner, once permanent facilities are completed and placed in service, the Contractor may remove temporary facilities. Review provisions with the Owner's insurance carrier to see if additional provisions will result in lower premiums; also review NFPA 241, *Safeguarding Construction, Alteration, and Demolition Operations*, before editing these provisions.

3.3 Environmental Considerations

A. Mold and Moisture Protection: In order to deliver a finished facility that is free of moisture damage and mold growth, the Contractor is responsible for taking appropriate steps during the construction to control the ingress of moisture, protect hygroscopic materials, and maintain a clean jobsite. Recommended procedures for controlling moisture during construction are well presented in the Associated General Contractors of America publication, *Managing Risk of Mold in the Construction of Buildings*.

B. Dust, Fume, and Odor Control: Construction sites inherently product dust- and fume-producing environments. Work in occupied facilities poses special challenges with respect to protection of the occupants and maintenance of acceptable indoor air quality. Include general provisions for dust control, maintaining negative air pressure, and separating HVAC systems that are intended to protect occupants from pollutants generated by construction operations.

END OF SECTION

SECTION 015800

PROJECT IDENTIFICATION

GENERAL GUIDELINES

1.1 SECTION INCLUDES

A. Signage identifying the construction and project team.

1.2 MATERIALS

A. Lumber and Plywood
1. For signs and directory boards, provide exterior marine plywood of sizes and thicknesses indicated.
2. Treated lumber posts.
a. Preservative chemicals: Shall contain no arsenic or chromium.

B. Paint
1. For sign panels and applying graphics, provide exterior grade alkyd gloss enamel over exterior primer.

1.3 PROJECT IDENTIFICATION

A. Project Identification and Temporary Signs: Prepare project identification and other signs of size indicated. Support on posts of framing of preservative treated wood or steel. Do not permit installation of unauthorized signs.
1. Project Identification Signs: Engage an experienced sign painter to apply graphics. Comply with details indicated.
2. Temporary Signs: Prepare signs to provide directional information to construction personnel and visitors.

LEED SUGGESTIONS

2.1 A. Credit EQ 4.4: For composite-wood products, consider using products containing no urea formaldehyde.

B. Credit MR7: For wood products consider using materials obtained from forests certified by an ***FSC***-accredited certification body to comply with FSC STD-01-001, “FSC Principles and Criteria for Forest Stewardship.”

END OF SECTION

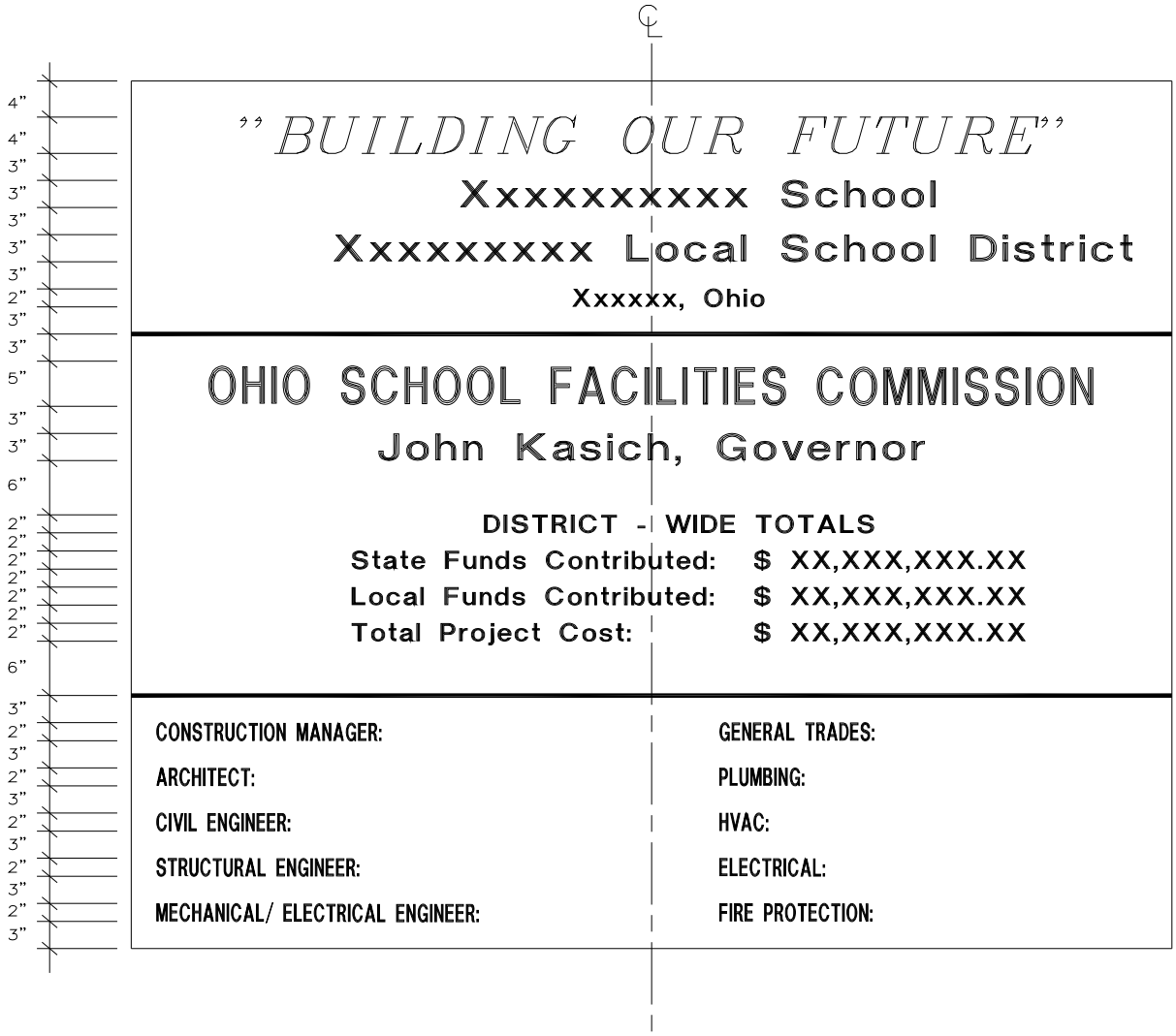

PROJECT SIGN NOTES:

1. (1) SIGNBOARD – 8'–0" X 8'–0" X 3/4" MARINE PLYWOOD
2. LETTERS – GREEN ON WHITE BACKGROUND/STRIP AND BORDER RED/ SIZES AS NOTED
3. (2) POSTS 10'–0" (4" X 4")/FIR TREATED AND PAINTED BROWN
4. CROSS BRACE 2" X 4" X 5'–0"/LET INTO POSTS
5. (4) CARRIAGE BOLTS 5/8" X 5" WITH WASHERS
6. LOCATION DETERMINED BY ARCHITECT IN FIELD
7. LETTER STYLE TO BE "HELVETICA MEDIUM"

SECTION 017419

CONSTRUCTION WASTE MANAGEMENT AND DISPOSAL

GENERAL GUIDELINES

1.1 SECTION INCLUDES

A. Salvaging nonhazardous demolition and construction waste.

B. Recycling nonhazardous demolition and construction waste.

C. Disposing of nonhazardous demolition and construction waste.

1.2 PERFORMANCE GOALS

A. Salvage/Recycle Goals: As much demolition and construction waste as possible.

1.3 WASTE MANAGEMENT PLAN

A. Types and quantities of demolition, site-clearing, and construction waste.
1. Plan shall be approved by Construction Manager.
2. Train workers, subcontractors, and suppliers on waste management plan.
3. Distribute waste management plan to entities when they first begin work on-site.

B. Type of waste and whether it will be salvaged, recycled, or disposed of in landfill or incinerator.

1.4 RECYCLING WASTE

A. Recycling Incentives: Revenues and other incentives for recycling will accrue to Contractor.

LEED SUGGESTIONS

2.1 LEED for Schools includes credits for diverting materials from landfills. The project team is encouraged to work together to establish project goals for these credits.

LESSONS LEARNED

3.1 Everyone on the project team, including vendors, should be made aware of the project goals so materials are not disposed of that could have been salvaged. Signs should be posted at the waste collection areas indicating what should be done to accomplish project goals.

END OF SECTION

SECTION 017700

CLOSEOUT PROCEDURES

GENERAL GUIDELINES

1.1 TORNADO SHELTER AREAS

A. The 1999 "National Performance Criteria for Tornado Shelters" provided by FEMA recommends providing 5 SF per person standing (10 SF for wheelchair) for shelter area. The 1998 National Fire Code also has recommendations. The Design Professional for new school facilities should assist the school district in selecting the most obvious shelter areas. Shelter areas should be ADA accessible and could include toilet rooms, locker rooms, spaces below structural decks, smaller interior rooms, in spaces with short ceiling spans, and in the center of the building.

B. It is not the intent of this section to require construction or improvement of a facility or area for use as a tornado shelter. Identified spaces should avoid walls of glass, windows, skylights, exterior walls, long open corridors, and modular classroom buildings.

C. Prior to completion of required closeout items, the Design Professional shall submit, through the Construction Manager, to the school district, a floor plan indicating recommended tornado shelter areas for the building(s) involved. The floor plan shall be small scale and indicate spaces to provide 5 SF per occupant plus reasonable space for wheelchair occupants.

D. OSFC and others involved in the development of this project closeout section do not make any representation, warranty, or covenant, expressed or implied, with respect to performance or results from recommendations herein.

1.2 PROJECT RECORD DOCUMENTS

A. The Design Professional shall provide record documents to the School District prior to final completion. The record documents shall be in conformance with the requirements of A/E Contract Article 2.7.16, CM Contract Article 2.7.16 and 2.7.14, General Conditions Article GC 11.2.1, and other provisions of the closeout process as determined by the OSFC in accordance with the Policy and Procedure Memorandums.

END OF SECTION

SECTION 018113

SUSTAINABLE DESIGN REQUIREMENTS

GENERAL GUIDELINES

1.1 SECTION INCLUDES

A. USGBC Leed for Schools: Silver certification based on LEED for Schools.

B. A copy of the LEED project checklist is to be submitted by the Design Team to the OSFC at each phase submission and shall be attached to the this section for contractor's information only.

1.2 SUBMITTALS

A. LEED Action Plans: The Design Team is encouraged to work with the Construction Team to develop an "Action Plan" within 30 days of date established for the Notice to Proceed:
   1. The "Action Plan" shall indicate contractor strategies for obtaining construction phase credits.

B. LEED Progress Reports: Contractor shall, with each Application for Payment, compare construction and purchasing with LEED action plans.

C. LEED Documentation Submittals: Contractor shall provide product data, receipts, certification letters, chain-of-custody certificates, and other documentation needed to show compliance with requirements.

LESSONS LEARNED

3.1 A LEED Action Plan can provide reassurance that the contractors understand the LEED requirements and can help to clear up misunderstandings before they become a larger problem.

3.2 It Owner authorizes use of permanent heating, cooling, and ventilating systems during construction period, verify installation of filter media having a MERV 8 according to ASHRAE 52.2 at each return-air inlet for air-handling system used during construction. Verify all filters are replaced prior to occupancy with MERV ***rating indicated in the project specifications.***

END OF SECTION

THIS PAGE HAS BEEN INTENTIONALLY LEFT BLANK.

SECTION 019100

COMMISSIONING

Spec Writer Note: Development of this specification section requires coordination with the project CxA. The CxA will assist with developing this section to properly reflect the scope of work for the project.

GENERAL GUIDELINES

1.1 Referenced Standards
- A. LEED for Schools Credit EAp.1 and EAc3
- B. ASHRAE Guideline 0 - 2005
- C. ASHRAE Guideline 1.1 - 2007

1.2 Related Documents

A. Owner Project Requirements (OPR), Basis of Design (BOD), Construction Drawings and Specifications, LEED documentation, Provisions of the Commissioning Services Contract, including General Conditions and Requirements, Supplementary Conditions, Revisions and other Specification sections, apply to work in this section.

1.3 Definitions

School District (SD or Owner)
Ohio School Facilities Commission (OSFC or Co-Owner)
Ohio School Design Manual (OSDM)
Architect/Engineering Firm (A/E)
Construction Manager (CM)
Commissioning (Cx)
Commissioning Authority (CxA)
Test and Balance (TAB)
Owner's Project Requirements (OPR)
Basis of Design (BoD)
United States Green Building Council (USGBC)
Design Team (A/E, CM)
Project Team (A/E, CM, Contractor, Owners)
LEED Accredited Professional (LEED-AP)
Commissioning Team (SD, OSFC, CxA, CM, HVAC contractor, ATC contractor, TAB contractor, electrical contractor, plumbing contractor, general contractor.)

1.4 General Work Included

A. This section describes the process for commissioning of the various building systems, defines the responsibilities for the Project Team, and outlines the duties of parties involved.

B. The commissioning process may be applied to all equipment, components, and systems to be commissioned as listed in Part 3 of this section, including specified interfaces to and from equipment and systems provided under the other Divisions of this Specification.

C. LEED for Schools EAp1 - Fundamental Cx- INTENT: Verify that the building's energy-related systems are installed, calibrated, and perform according to the Owner's Project Requirements, Basis of Design, and Construction Documents.

D. LEED for Schools EAcr3 - Enhanced Cx - INTENT: Begin the Cx process early during the design process and execute additional activities after systems performance verification is completed.

1.5 Commissioning Authority

A. The CxA shall confirm that major building systems in newly completed school facilities are good operational systems that are low on maintenance and operating costs and perform interactively according to the contract documents.

B. Basic Services provided by the CxA are defined as services starting in the design phase through the warranty phase and include seasonal Cx. The CxA shall review design documents per LEED for Schools, develop a project specific Cx specification, develop and coordinate the execution of a testing plan, which includes observing and documenting system's performance to ensure that systems are functioning in accordance with the design intent of the contract documents and School District objectives.

C. The CxA will conduct and document commissioning meetings.

D. The CxA is not responsible for design or general construction scheduling, cost estimating, construction management, or performing corrective work, but shall assist with problem solving or addressing non conformance issues or deficiencies as identified by the CxA.

E. (Spec Writer Note: Identify the CxA hired by the School District to act as the CxA for the project and insert into this paragraph.) The CxA is responsible to the owner and shall have the authority to recommend final acceptance of each system commissioned.

1.6 Design Team (A/E and CM)

A. A/E will prepare the BoD and the construction documents per the OPR and the OSDM. This information must be submitted to the CxA for review.

B. A/E is responsible for the LEED process for the project.

C. A/E shall respond to the commissioning issues log.

D. The CM shall attend the commissioning meeting.

E. The CM shall prepare the Indoor Air Quality (IAQ) plan to be reviewed by the CxA per LEED for Schools EQc3.

1.7 Contractors

A. The appropriate contractors shall be responsible for cooperating and coordinating their work during the commissioning process. They shall be responsible for performing all work required for the installation of the components and systems, and for operation during the commissioning process. They shall furnish all necessary resources to accomplish the installation and the commissioning.

B. Within 30 days of the award of Contract, the Contractor shall submit the names of all the trades people who will be part of the commissioning process. The Contractor, and all his sub-trades and suppliers, shall cooperate with the CxA in the commissioning process.

C. At the initial commissioning scope meeting, to be held within 90 days of contract award, the contractor shall review the project schedule and identify the milestone commissioning activities. Milestone commissioning activities shall include, but are not limited to; equipment start-ups, system start-ups, testing activities performed by the contractor, readiness of each major system, and system functional testing as part of the commissioning process.

D. Contractor shall attend commissioning meetings, and complete action items arising from them, as required to allow the commissioning process to proceed on schedule.

E. Contractor shall complete and provide all system readiness documentation required by the commissioning process.

F. Contractor shall provide a Start-up Plan for each piece of equipment and system that is identified to be commissioned. Notify the CxA a minimum of seven (7) calendar days before start-up of major equipment and systems.

G. Contractors shall perform functional performance testing as specified in the CxA functional performance testing procedures.

H. Contractor shall provide personnel and testing instrumentation required to operate and test equipment and systems as part of functional performance testing. Testing may include calibration verification of system devices. Testing shall take place under the direct supervision of the CxA. Contractor shall be responsible for reimbursing the Owner and CxA for costs associated with retesting of systems that fail initial testing.

1.8 Commissioning Documentation

A. Commissioning Plan - Created by the CxA during the design phase of the project to identify scope of commissioning for the project and a preliminary schedule of activities for use during the project by members of the Commissioning Team.

B. Commissioning Specification – Created by the CxA during the design phase of the project to be inserted into the construction documents. Specification shall include a sample test form for all major equipment.

C. Meeting Minutes – Issued to members of the Commissioning Team after each commissioning progress meeting. Generated by the CxA.

D. Commissioning Schedule – Produced by the CxA with the input from the CM and the Commissioning Team contractors.

E. Design Phase documents – A/E will define the design intent for the Owner and for establishment of a basis for the Cx process. CxA will perform a design peer review report of the Owner's project requirements (OPR), Basis of Design (BoD), MEP Design Documents and the energy model. All documentation must be in compliance with LEED for Schools Credit EAc3 at each phased submission.

F. Start-up Plan – Submitted by the Contractor to identify methods to be used for equipment pre-checks, start-up procedures, start-up schedule, and sample reports to document completion. The Contractor shall document all equipment deficiencies and corrections made in the field as part of start-up report. Gather all appropriate utility information.

G. Envelope Testing Plan – CxA shall develop a envelope testing plan, schedule and reports. Schedule shall be coordinated with the CM and contractors.

H. Construction Phase documents – CxA shall provide a peer review and any comments on shop drawings to the designer of record. The CxA shall perform a peer review of the As-built documents at the end of the project.

I. Test Reports – Reports generated by the Contactor to document system/equipment testing included in the contact that is not dictated by the CxA. (i.e. hydrostatic pipe test report, pipe flushing & disinfection report, air & water balance report, etc.) CxA shall provide a review of these test reports.

J. Commissioning Issues Log – Identifies system deficiencies found through the commissioning process, updated and issued by the CxA.

K. Functional Tests – Created by the CxA, reviewed by the Project Team and the Commissioning Team contractors, for use during functional testing of each system. Test shall incorporate the Engineers sequence of control.

L. Training Plan – Submitted by the Contractor identifying personnel providing training and their qualifications, training supplemental materials and training session agendas for review by the CxA. Operation and maintenance manuals and as-builts shall be submitted to the CxA and the A/E to ensure completeness.

M. Systems Manual – CxA shall compile the System Manual for the owner. System manual shall consist of the OPR, design narrative and BOD (by A/E), CxA narrative, performance metrics for pre design (by A/E), control drawings (ATC), table of setpoints (by A/E and ATC), energy saving strategies (by A/E), As-Built drawings (CM, A/E and contractor), re-commissioning plan and energy tracking recommendations.

N. Final Commissioning Report – Provided by the CxA summarizing results, status of remaining operating deficiencies, and future actions and nonactions.

O. Re-commissioning manual – Provide by the CxA to identify a re-commissioning plan in compliance with LEED Eac3.

P. Commissioning Complete document– Formal Cx Project Complete document with sign-off to add finality to project.

Q. Post-Acceptance Phase documents – CxA will provide a near-warranty-end review of commissioned equipment. CxA will participate in a project close-out meeting / walk-thru with the construction team near the end of the warranty period to review and provide updates of any remaining construction issues. CxA will provide a letter report, summarizing the status of any remaining construction issues after conducting this “End of Warranty Period” walk-thru.

1.9 Testing Equipment & Instrumentation

A. The Contractor shall provide all industry standard test equipment required for performing the specified tests. Any proprietary vendor specific test equipment shall be provided by that vendor or manufacturer.

B. Any portable or hand-held setup / calibration devices required to initialize the control system shall be made available by the control subcontractor at no cost to the CxA or Owner for use during functional testing or pre-check inspections.

C. The Contractor's instrumentation shall be of sufficient quality and accuracy to test and/or measure system performance within the tolerances required. Instrumentation shall be calibrated at the manufacturer's recommendation intervals with calibration tags permanently affixed to the instrument. Instrumentation shall be maintained in good repair and operating condition throughout the duration of use on this project and shall be immediately re-calibrated or repaired if dropped and/or damaged in any way during use on the project.

1.10 Direct Digital Control System Software & Hardware

A. The Automatic Temperature Control Contractor shall provide the CxA full access to the Direct Digital Control system at the start of the acceptance phase.

B. System Software – The ATC Contractor shall provide the CxA with a copy of the system software and programming manual, including all diagnostic and trouble shooting features with license good for use during the project warrantee period. The ATC Sub-contractor shall provide the CxA training to allow navigation of the program. The security access should limit the CxAs ability to modify programming and only provide setpoint adjustment access, although does allow viewing of all system parameters and programming.

1.11 Commissioning Process

A. General: The commissioning process depends upon proper coordination between all Commissioning Team members, strict adherence to schedule and completion of all required documentation. Responsibilities of each team member are described in this and other sections of the contract.

B. Pre-Construction Phase

1. Initial Input: CxA shall attend POR meeting with Design Team to review project scope. A/E shall have an eco-charrette meeting where the CxA, CM, and Owner provide input. No later than the Design Development Phase, the Design Engineer shall submit the BOD Design Intent, Energy Model, Sequence of Operation, and Design Drawings to the CxA for review and comment. The CxA design review will follow LEED for Schools.

2. Preplanning: CxA will assist the A/E and CM in having the necessary commissioning language added to the bid documents and contractor requirements. CxA will work with the CM in adding the commissioning process into the project planning timeline and establish commissioning milestones.

C. Construction Phase

1. Commissioning Meetings: An initial Commissioning Scope Review/kick-off meeting will be held with all members of the Commissioning Team at the beginning of the project (generally within 90 days of award of contract). Periodic Commissioning Team progress meetings will be scheduled by the CxA to review progress of commissioning work and coordinate activities. (Commissioning progress meetings will be scheduled to coincide immediately before or after the regular weekly construction progress meeting.) Contractor shall anticipate at least one (1) commissioning meeting for every month of the construction phase (additional meetings as required will not be considered additional work to this contract).
2. Commissioning Schedule: Contractor shall assist the CxA in the development of a written schedule that integrates the commissioning activities into the construction schedule specified in Division 1. Update of the commissioning schedule to reflect changes in the work will be done as necessary. The commissioning schedule shall include at least the following dates:
   a. Submission of Operation & Maintenance information for systems to be commissioned.
   b. Schedule for systems, subsystems, and equipment start-up, including services of manufacturers' authorized service representatives, and performance of pretest checks.
   c. Schedule for functional performance testing, including seasonal testing.
   d. Schedule for Building Envelope testing.
   e. Schedule for Owner's operating personnel training.
3. Equipment & System Start-Up: Before any equipment or system is started, the Start-up Plan, including all pre-start check documentation provided by the equipment manufacturer, must be submitted. A minimum of seven (7) days prior to the start-up, the contractor shall notify the CxA of the scheduled start-up and give the CA the opportunity to witness part or all of the start-up work, and conduct their own pre-check inspection. After start-up is completed, then contractor shall submit completed start up report for each piece of equipment.
4. Prerequisite to Commissioning: Test and Balance report must be signed off by the Designer of record prior to final Cx of the respective systems. The CxA will observe, witness, and verify the TAB work in progress as necessary and correct. It is expected that all relevant and known punch-list items are addressed prior to that agenda Cx activity.
5. Initial Operation: Once the Contractor completes the start-up, testing, balancing, and calibration of all components and systems, the Contractor shall operate all systems through the specified modes of operation, and test the system responses to specified abnormal or emergency conditions. It is the responsibility of the contractor to complete the system and perform this functional and performance pre-check before the commissioning team performs functional acceptance testing.
   a. Functional acceptance testing included in the commissioning process is verification that the contractor has provided a complete and functioning system per the contract requirements. It is <u>not</u>, an opportunity for the contractor to determine deficiencies and work remaining.

b. The contractor shall ensure that a qualified technician(s) is available and present during the agreed upon schedules and of sufficient duration to complete the necessary tasks, tests, adjustments, and/or problem resolution.

c. Functional testing of the system shall be terminated and re-scheduled if it is deemed by the CxA that the system is not ready for functional testing and that the contractor has not fully completed the required initial operation pre-check. Costs borne by the Owner, CxA, Construction Manager and Associates associated with the additional time and resources required to re-schedule and repeat testing due to a lack of system readiness by the contractor, shall be borne by the contractor.

D. Acceptance Phase

1. Functional Acceptance Testing: Systems identified for commissioning shall be operated through the entire specified sequence of operations, as directed by the CxA for verifying acceptable operation. The contractor shall provide all testing instrumentation required and operate the system during the tests, and by this, the contractor shall ensure that the systems are not operated beyond their limits as installed.

2. System Deficiencies: All system operational deficiencies identified during the functional acceptance testing will be recorded by the CxA for correction by the contractor. Work to correct the deficiencies will be under the direction of the Owner, the Owner's representative, or the Project CM. Final acceptance of the system shall not be granted until all deficiencies identified are corrected or accepted.

E. Post-Acceptance Phase

1. CxA will provide a near-warranty-end review of commissioned equipment. CxA will participate in a project close-out meeting / walk-thru with the construction team near the end of the warranty period to review and provide updates of any remaining construction issues. CxA will provide a letter report, summarizing the status of any remaining construction issues after conducting this "End of Warranty Period" walk-thru.

1.12 System(s)/Equipment to be Commissioned

Spec Writer Note: Coordinate with the CxA and Owner which systems are to be commissioned for the project. HVAC systems and components listed are to be included in the basic project scope of work, although commissioning of additional building systems may also be added as an Owner's option.

A. The following systems shall be commissioned:

1. HVAC Systems including:

a. Direct digital automatic temperature control system (building automation systems)

b. Air distribution systems (air handling units, VAV boxes, make-up air units, etc.)

c. Hot water heating system (including boiler(s), pumps)

d. Chilled water system (including chiller(s), pumps)

e. Exhaust systems

f. Unitary systems (heat pump units & unit heaters)

g. Variable frequency drives

h. Cooling towers

i. Hydronic systems

j. Electrical heating systems
k. Utility service to HVAC systems
l. Energy consumption
M. HVAC Equipment Noise

2. Electrical Contractor Systems including:
   a. Normal Power Distribution (Main to Sub-Panel)
   b. Emergency Power System
   c. Alternative Energy Systems
   d. Lighting and lighting control
3. Plumbing Contractor Systems including:
   a. Domestic Hot Water
4. General Contractor Systems including:
   a. Classroom Acoustics per OSDM
   b. Building Envelope
   c. Kitchen Refrigerant Systems

B. The following equipment shall be provided a formal start-up (refer to other sections of the project specification for additional start-up requirements):
   1. HVAC Equipment including:
      a. Air Handling Units
      b. Boilers
      c. Pumps
      d. Chillers
      e. Fans
      f. Unitary Equipment
      g. Generator and Transfer Switches

END OF SECTION

02 DIVISION

EXISTING CONDITIONS

TABLE OF CONTENTS

DIVISION 02: EXISTING CONDITIONS

024116	Structural Demolition
024119	Selective Structural Demolition
025000	Site Remediation

SECTION 024116

STRUCTURAL DEMOLITION

GENERAL GUIDELINES

1.1 SECTION INCLUDES

A. Qualitative requirements for demolition and removal of buildings and site improvements.

1.2 QUALITY ASSURANCE

A. Quality Standard: ANSI A10.6 and NFPA 241.

1.3 EXAMINATION

A. Perform an engineering survey of condition of building.

1.4 DEMOLITION

A. Use of explosives is not permitted.

B. Below-Grade Construction: Demolish and completely remove materials within 5 feet of new building footprint.
   1. Remove to at least 12 inches below grade all material outside of building footprint.

C. Existing Utilities: Demolish within 5 feet of new/existing building footprint and abandon outside footprint.

1.5 SITE RESTORATION

A. Below-Grade Areas: Fill and rough grade.
   1. Fill with satisfactory soil materials, recycled pulverized concrete, or recycled pulverized masonry per Geotechnical Engineer's recommendation.

1.6 DISPOSAL OF DEMOLISHED MATERIAL

A. Remove demolished material from site that cannot be salvaged or recycled and dispose of in an EPA-approved landfill.

B. Burning: Not Permitted.

LEED SUGGESTIONS

2.1 Coordinate with goals for "Construction Waste Management" to divert demolition debris from landfills. Identify and document materials that can be recycled. Identify and document materials to be salvaged for reuse either on site or off site.

LESSONS LEARNED

3.1 If over one acre of site is disturbed outside of building footprint, the School District must apply for a Notice of Intent (NOI) for Coverage under Ohio Environmental Protection Agency General Permit. Comply with local authorities who have jurisdiction requirements.

END OF SECTION

SECTION 024119

SELECTIVE STRUCTURE DEMOLITION

GENERAL GUIDELINES

1.1 SECTION INCLUDES

A. Qualitative requirements for demolition and removal of portions of a building or structure and selected site elements.

1. Salvage existing items that can be reused or recycled.

1.2 EXECUTION

A. Professional engineer engaged to survey condition of building.

1.3 DISPOSAL OF DEMOLISHED MATERIAL

A. Remove demolished material from site that cannot be salvaged or recycled and dispose of in an EPA-approved landfill.

LEED SUGGESTIONS

2.1 Large portions of existing structures that can be reused on a major renovation project may qualify for a LEED for Schools Materials and Resources, Building Reuse Credit. Design Professionals are encouraged to pursue these credits where possible.

2.2 Coordinate with Construction Waste Management Plan. Identify materials to be recycled. Identify materials to be salvaged for reuse either on site or off site.

LESSONS LEARNED

3.1 What is to be demolished and what is to remain should be clearly indicated on the Drawings. Distinguish between what is to be demolished and discarded, and what is to be reinstalled, salvaged, or protected.

3.2 If selective demolition involves the exterior walls or roof of a building, temporary enclosures need to be weather-tight and strong enough to withstand winds. Airborne particles and dust generated by selective demolition activities may also be of concern to occupants of other spaces in the building. The following requirements can also be added to the Section Text for selective demolition locations near occupied areas where dust and other possible pollutants may be an issue:

A. Provide a vestibule enclosure at the entrance to the selective demolition area to create an airlock and suiting-up area.

B. Specify access routes for equipment and personnel and removal routes for selection demolition debris to areas outside the building; use sealed transport containers in corridors.

C. Provide exhaust systems to filter out and expel dust and airborne contaminants from the selective demolition enclosure directly to the outside. Design the system to provide negative air pressure in the selective demolition area relative to the adjacent spaces. The system can be designed and shown on the Drawings or the Contractor can be required to design the system to meet specific criteria.

D. Provide replacement-air (makeup air) systems to condition and filter air to replace exhausted air.

E. Clean and treat duct interiors with antifungal and antiviral agents after selective demolition is complete.

END OF SECTION

SECTION 025000

SITE REMEDIATION

GENERAL GUIDELINES

1.1 SECTION INCLUDES

A. ***Qualitative requirements concerning remediation of typical environmental contaminants at school renovation/demolition sites.***

1.2 ***ASBESTOS***

A. Under Environmental Protection Agency (EPA), National Emission Standards for Hazardous Air Pollutants (NESHAP), and inspection for asbestos-containing materials (ACM) must be completed prior to renovation or demolition of a facility. While some of the information in this report can be used, the Enhanced Environmental Assessment prepared for the Ohio School Facilities Commission does not satisfy this inspection requirement.

1. The inspection for asbestos-containing materials must be conducted by an Asbestos Hazard Evaluation Specialist (AHES) licensed by the Ohio Department of Health.

2. To conduct this inspection, the AHES should be provided with the results of any previous sampling conducted for the District and will need to know whether or not the buildings or portions thereof will be demolished or renovated.

3. If the building will be demolished, the AHES will need to know if the design for demolition will include requirements to recycle building materials or portion thereof.

B. ACM is defined as those materials containing greater than 1% asbestos. Since OSHA still regulates the removal of materials containing less than or equal to 1% asbestos, OSFC policy is to treat all materials (even those containing less than 1% asbestos) as ACM.

C. Prior to collecting bids for the removal of ACM found during the inspection, an asbestos hazard abatement design must be prepared by an individual licensed by the Ohio Department of Health as an Asbestos Hazard Abatement Project Designer.

D. Generally, OSFC's policy is that all asbestos-containing materials be removed prior to renovation work. Materials allowed to remain in a facility during demolition under NESHAP regulations not be removed. Regulatory requirements regarding removal of asbestos-containing materials include, but are not limited to, the following:

1. Under NESHAP, EPA mandates the following:

a. Demolition Work: regulated Asbestos-Containing Materials (RACM) must be removed. RACM includes the following: friable ACM (e.g., fireproofing and mechanical insulation); Category I nonfriable ACMs that become friable or will be subjected to

sanding, grinding, cutting or abrading (e.g., non-intact/nonpliable resilient floor coverings and glazing compound); and Category II nonfriable ACMs (e.g., hard plaster, gypsum board and cement board) which have a high probability of becoming crumbled, pulverized, or reduced to powder during the course of demolition work. Typically, Category I nonfriable ACM and pliable Category II nonfriable ACMs need not be removed prior to demolition work where standard demolition procedures and equipment are utilized (i.e., wrecking ball and cranes, bulldozer wrecking, explosions/ implosions, heavy equipment loading and materials handling, etc.).

1) Any Category I or Category II asbestos-containing material that becomes damaged from either deterioration or attempts at removal or abatement resulting in small fragments the size of four square inches or less shall also be considered friable or RACM.

b. Renovation Work: if a variance to OSFC's policy regarding removal of all ACM is granted, NESHAP requires that ACM be removed prior to renovation if such work will disturb them.

2. In schools being renovated, abatement work shall also be conducted per EPA's Asbestos Hazard Emergency Response Act which includes, but is not limited to, procurement of air samples following asbestos hazard abatement work prior to dismantlement of work areas.

3. Occupational Safety and Health Administration (OSHA) Standards require implementation of appropriate engineering controls and work practices for renovation and demolition work where ACM is present. These controls and practices include specific methods for removal of each type of ACM, air monitoring, appropriate personal protective equipment, hygiene facilities, and proper containerization and disposal of asbestos waste.

   OSHA also regulates disturbance of materials which contain trace amounts (one percent or less) of asbestos. For removal of materials containing trace amounts of asbestos, OSHA requires air monitoring of employee exposures, use of wet methods, and proper containerization of waste. Therefore, for purposes of this report, material containing trace amounts of asbestos have been treated as if they are ACM.

4. Ohio Department of Health (ODH) regulations require that credentialed and licensed personnel be used for asbestos-related work (survey, design, abatement work, etc.).

1.3 LEAD- AND CADMIUM-CONTAINING COATINGS

A. OSHA regulations apply to work that will disturb paint or any other coating that contains a detectable amount of lead utilizing a valid detection method. EPA regulations apply to work that will disturb coatings that contain lead in an amount equal to or greater than 1.0 mg/cm^2 or 0.5% by weight). Generally, since OSHA regulations will virtually always apply to renovation work, OSFC's policy is to assume that all coated surfaces contain lead and cadmium. However, in child-occupied facilities (any school built prior to 1978 where children under 6 years of age are present on a regular basis), one should consider having a full building or partial paint inspection completed in these types of facilities built between 1960 and 1978 to determine whether or not EPA's RRP regulations would apply (refer to paragraph 1.3.C below). Note that if a facility is inspected prior to renovation work, this inspection must be completed per Ohio Department of Health regulations using licensed lead inspectors or lead risk assessors.

B. In schools not defined as a child-occupied facility, the following language should be added to Bidding Documents: Contractors shall assume that painted and coated surfaces that may be disturbed during work contain lead and cadmium. Contractors shall follow applicable OSHA and EPA regulations.

1. OSHA requirements include, but are not limited to: air monitoring; engineering controls and respirator usage (based on results of air monitoring); designation of a competent person; certain housekeeping activities; handwashing facilities; hazard communication and safety training; and clean lunchroom facilities.

2. EPA requirements include, but are not limited to sampling and/or disposal of lead waste.

C. In schools which are child-occupied facility (e.g., kindergarten classrooms, daycare facilities, etc.), the following language should be added to Bidding Documents: Contractors shall assume that painted and coated surfaces that may be disturbed during work contain lead and cadmium. Contractors shall follow applicable OSHA and EPA regulations, including EPA's Renovation, Repair and Painting Program Final Rule (RRP).

1. RRP requirements include, but are not limited to: use of certified firms, certified renovators, and trained workers; installation of job postings and demarcation signage; isolation of work areas; installation of polyethylene film over all flooring and objects; use of personal protective equipment; and prohibition of certain work activities.

2. RRP also requires that, at a minimum, prior to opening a renovated area within a building to the public, that the work area pass a visual inspection and project cleaning verification process; this process includes the wiping of floors, countertops and sills with a cleaning cloth at least 3 times or until the cloth passes a visual cleaning standard.

1.1 MERCURY

A. Elemental mercury may be found in schools as follows:

1. Fluorescent and HID lamps contain mercury; EPA regulations require proper recycling and disposal of these lamps.

2. HVAC and other mechanical components may utilize mercury switches and thermostats; EPA regulations require proper recycling and disposal of such devices.

3. Elemental mercury is often found in school laboratories, occasionally in large quantities. Chemistry and physics labs may study its unusual properties, and labs may utilize mercury-containing devices such as thermometers and pressure gauges. EPA regulations require proper recycling and disposal of mercury from laboratories.

4. Improper handling of elemental mercury from the above sources could result in mercury spills.

5. Elemental mercury may contaminate building drainage systems, especially those drains serving laboratories. Often, plumbing traps and acid/neutralization tanks collect mercury that has been flushed down drains.

B. Polyurethane sport or recreational floor finishes may be present in schools, sometimes under newer floor finishes. Some polyurethane flooring was manufactured using mercury (and other heavy metals) salts as catalysts; as these floors age, they emit mercury vapor. Suspect polyurethane floors should be sampled to determine whether or not levels of mercury or other heavy metals used in their manufacture were in sufficient concentrations to trigger EPA Hazard Waste requirements. If mercury-containing floors will be left in place, mercury vapor sampling should be performed to determine that levels are safe for occupancy.

C. Suspected mercury spills and mercury removal projects need to be evaluated by experienced consultants or health professionals. Remediation of mercury hazards should be performed by experienced and trained environmental contractors in accordance with EPA and OSHA regulations.

1.5 UNDERGROUND STORAGE TANKS (USTs)

A. USTs may be found on school sites. Active USTs should be evaluated to determine whether or not they meet current building and fire codes. Inactive USTs should be removed from the site during demolition or renovation work and proper site closure procedures and reports should be prepared.

B. In Ohio, BUSTR (Bureau of Underground Storage Tank Regulations, part of the State Fire Marshall's Office) regulates most gasoline and diesel USTs. BUSTR's mission is to effectively regulate the safe operation of underground storage tanks and to ensure appropriate investigation and cleanup of releases from USTs.

C. Heating oil USTs are not regulated by BUSTR, but BUSTR regulations are often followed for their design, maintenance and removal.

D. UST renovation/demolition work must be performed by BUSTR accredited firms and individuals.

1.6 POLYCHLORINATED BIPHEHYLS (PCBs)

A. Many schools in the U.S. have light ballasts containing PCBs. PCBs are contained within the ballast capacitors and potting materials.

B. In recent years, EPA has learned that caulk containing PCBs was used in some buildings, including schools, in the 1950s through the 1970s.

C. PCBs were widely used as an insulator and fire retardant in electrical transformers.

D. PCBs are regulated by the EPA under their Toxic Substances Control Act (TSCA). Materials containing PCBs must be disposed of properly.

END OF SECTION

03 DIVISION

CONCRETE

TABLE OF CONTENTS

DIVISION 3: CONCRETE

031119	Insulating Concrete Forming
033000	***Cast-in-Place Concrete***
033510	Polished Concrete Finishing
033519	Colored Concrete Finishing
034100	Precast Structural Concrete
034500	Precast Architectural Concrete
035113	Cementitious Wood Fiber Decks
035216	Lightweight Insulating Concrete

SECTION 031119

INSULATING CONCRETE FORMING

GENERAL GUIDELINES

1.1 SECTION INCLUDES

A. Qualitative requirements for an insulated concrete wall forming system. It is an expanded polystyrene concrete forming unit which is used to construct a monolithic reinforced concrete wall. The forms remain in place providing an energy efficient concrete wall and it is finished with conventional interior and exterior wall coverings.

1.2 MATERIALS

A. Expanded Polystyrene: ASTM C 578.

B. Cross Ties: Polypropylene.

C. Concrete and Steel Reinforcement: Refer to Section 033000 – Cast-in-Place Concrete.

1. Compressive Strength: 3000 psi minimum.
2. Slump: 4 to 6 inches.

1.3 ACCESSORIES

A. Bracing, wall alignment, and scaffolding.

B. Window and door bucks.

C. Bearing plates and rim joist brackets or anchors.

D. Anchor bolts and plate anchors.

E. Waterproofing for below grade applications. ***Refer to 071000 – Dampproofing and Waterproofing.***

F. Exterior Finishes: Refer to Section 042000 – Unit Masonry.

G. Interior Finishes: Must meet 15 minute thermal barrier requirements. Refer to Section 092116 – Gypsum Board Assemblies.

LESSONS LEARNED

2.1 Wall can achieve an R-value of greater than 20. Thermal comfort combined with thermal mass advantages yields potential energy savings.

2.2 Sound Attenuation can achieve an STC of 50 when a 6 inch core is used.

2.3 Fire Resistive Construction: Up to 4 hours can be obtained.

2.4 Storm Safe Occupancy: System can be reinforced to sustain wind loads in excess of 150 miles per hour.

END OF SECTION

THIS PAGE HAS BEEN INTENTIONALLY LEFT BLANK.

SECTION 033000

CAST-IN-PLACE CONCRETE

GENERAL GUIDELINES

1.1 SECTION INCLUDES

A. Qualitative requirements for curing, standard finishing, cements, aggregates, plasticizers and other chemical admixtures, additives, hardeners, and concrete reinforcement.

1.2 QUALITY ASSURANCE

A. Quality Standard: ACI 301.

1.3 REINFORCEMENT MATERIALS

A. Reinforcing Bars: Deformed.

B. Welded Wire Fabric (WWF): Plain.

C. Fibrous Reinforcement: (Optional) Fibrous reinforcement may be used in addition to welded wire fabric for concrete toppings and interior and exterior slabs on grade, whether exposed or covered with a floor covering. Use only fibrous reinforcement in precast concrete plank topping.
   1. Not to be used as a substitute for primary reinforcement for composite and non-composite elevated slabs or for interior or exterior slabs on grade.

D. Carbon Steel Fibers:
   1. Carbon steel fibers may be used in concrete for slabs on grade in lieu of welded wire fabric and fibrous reinforcement, at a rate of 30 lbs/cu.yd. of concrete.
   2. Carbon steel fibers may not be used in concrete for elevated slabs on non-composite deck or steel centering in lieu of welded wire fabric and fibrous reinforcement.
   3. Carbon steel fibers may be used in concrete for elevated slabs on composite metal deck at a rate of 35 lbs. per cubic yard of concrete.

E. Structural Macro Fibers:
   1. Structural macro fibers may be used in concrete for slabs on grade in lieu of welded wire fabric and fibrous reinforcement at a rate of 4 lbs. per cubic yard of concrete.
   2. Structural macro fibers may be used in concrete for elevated slabs on composite metal deck at a rate of 4.5 lbs. per cubic yard of concrete.
   3. Structural macro fibers may not be used in concrete for elevated slabs on non-composite metal deck.

1.4 CONCRETE MATERIALS

A. Portland Cement: ASTM C150, Type I, II, or III.

B. Supplementary Cementitous Materials:
1. Fly Ash: May be used up to a maximum of 25% of the total cementitous materials content in all concrete mixes.
2. Ground Granulated Blast-Furnace Slag: May be used up to a maximum of 35% of the total cementitous material content in all concrete mixes.

C. Aggregates
1. ASTM C33, Class 3S, normal weight aggregates.
2. ASTM C330, light weight aggregates.

D. Water: Potable, ASTM C94.

E. Concrete Admixtures: Containing less than 0.1 percent chloride ions.
1. Water-Reducing Admixture: Type A.
2. Retarding Admixture, Type B.
3. High-Range Water-Reducing Admixture, Type F.
4. Water-Reducing, Accelerating Admixture: Type E.
5. Water-Reducing, Retarding Admixture, Type D.
6. Accelerating Admixtures: Type C.

F. Vapor Retarder:
1. ASTM E-1745; meets or exceeds Class B, Water Vapor Permeance (ASTM E-96): 0.025 gr./ft^2/hr. or lower.

G. Concrete Curing Methods
1. Keep concrete continuously wet.
2. Covering concrete with mats***.***
3. Covering concrete with impervious sheet***.***
4. ***Clear, waterborne dissipating liquid curing compound: to be used at all concrete floors scheduled to receive applied finish materials.***
5. ***Clear, waterborne membrane forming curing and sealing compound: to be used only at concrete floors not scheduled to receive applied finish materials.***

H. Clear, Waterborne, Membrane-Forming Curing and Sealing Compound:
1. Can be applied to floor not scheduled to receive a finish.

1.5 PROPORTIONING AND DESIGN OF MIXES

A. Proportion mixes by either laboratory trial batch or field experience methods as specified in ACI 301, using materials to be employed on the project for each class of concrete required.

B. Water/Cementitious Ratios: Concrete mixes shall be limited to the water/cementitious ratios specified in the Concrete Schedule.

1.6 FLOOR AND SLAB FINISHES

A. Float Finish (Flt-Fn) - Noncritical Floors:
   1. Specified Overall Value: FF 20/FL 15.
   2. Minimum Local Value: FF 14/FL 10.
   3. Apply float finish to monolithic slab surfaces that are to receive trowel finish and subfloors under concrete toppings, thickset tile, sand bed terrazzo, and raised computer floors.

B. Trowel Finish 1 (Tr-Fn1) – Carpeted Floors, unless otherwise noted.
   1. Specified Overall Value: FF 25/FL 20.
   2. Minimum Local Value: FF 17/FL 14.
   3. Apply trowel finish to monolithic slab surfaces that are to receive carpet and noncritical floors where slabs remain exposed, such as mechanical rooms, unless otherwise noted.

C. Trowel Finish 2 (Tr-Fn2) – Floors with improved flatness/levelness requirements.
   1. Specified Overall Value: FF 35/FL 25.
   2. Minimum Local Value: FF 24/FL 17.
   3. Apply trowel finish to monolithic slab surfaces that are to receive thin-set flooring, resilient flooring, linoleum flooring, fluid-applied flooring, resinous flooring and other flooring types, unless otherwise indicated.
      a. At thin-set tile floors, maximum permissible variation shall be ¼ inch to 10 feet from required plane. After surface is steel troweled, apply a fine broom finish.

D. Trowel Finish 3 (Tr-Fn3) – Floors requiring better than average flatness/levelness.
   1. Specified Overall Value: FF 45/FL 35.
   2. Minimum Local Value: FF 30/FL 24.
   3. Apply trowel finish to monolithic slab surfaces that are scheduled to receive a polished concrete finish, unless otherwise noted.

E. Trowel Finish 4 (Tr-Fn4) – Wood covered floors, and with other floor finishes as indicated in their technical sections and required by their manufacturers:
   1. The slab shall be steel troweled to a true level and finished smooth and straight to a tolerance of 1/8inch in any 10 foot radius.

F. Nonslip Broom Finish (NsBrm-Fn): Apply nonslip broom finish to exterior concrete platforms, steps and ramps, and elsewhere as indicated.
   1. Immediately after float finishing, slightly roughen concrete surface by brooming with fiber bristle broom, perpendicular to main traffic route. Coordinate required final finish with the A/E before application.

LEED SUGGESTIONS

2.1 LEED for Schools includes credits for materials extracted/harvested and manufactured within a 500 mile radius from the project site. Concrete ready mix plants are so numerous that they are generally within 50 miles of most job sites. Supplementary cementitious materials, Portland cement, and the raw materials for cement are also generally extracted and manufactured within 500 miles of a job site as well.

2.2 Most reinforcing steel in the U.S. is manufactured from recycled steel. Steel from the Electric Arc Furnace (EAF) process contains a total of 100 percent recovered steel, of which 67 percent is post-consumer.

2.3 Supplementary cementitious material such as fly ash and slag cement are typically considered pre-consumer recycled material.

LESSONS LEARNED

3.1 Fly ash may improve workability, cohesiveness, and pumpability of fresh concrete and reduce concrete permeability with corresponding improvement in durability.

3.2 Fiber reinforcement may be used when plastic shrinkage reduction is sought.

3.3 Vapor Retarder is to be used directly below slab-on-grade.

(please see chart on next page)

CONCRETE SCHEDULE (The following are minimum design values)		
ITEM OR STRUCTURE	FINISH	COMPRESSIVE STRENGTH AND OTHER REQUIREMENTS
Suspended slabs and concrete not otherwise indicated	RfFm-Fn SmFm-Fn, if exposed	3500 P.S.I. at 28 days Normal Weight Concrete: Minimum Cementitious Material Content: ACI minimum requirements Lightweight Concrete: Calculated Equilibrium Unit Weight: 110 lb/cu.ft, plus or minus 5 lb/cu.ft. per ASTM C567
Trench footings, footings, and interior foundations and retaining walls	RfFm-Fn SmFm-Fn, if exposed	3000 P.S.I. at 28 days
Foundation and retaining walls exposed to exterior	RfFm-Fn SmFm-Fn, if exposed, ***UON A6-Fn, where noted.***	4000 P.S.I. at 28 days 4.5% - 7.5% air entrainment Max W/C Ratio = 0.45 Mid-Range Water Reducer Required
Interior formed concrete exposed to view	SmFm-Fn	4000 P.S.I. at 28 days ***Max W/C Ratio = .055***
Interior floor slabs scheduled to receive mud-set mosaic and quarry tile	Flt-Fn	3500 P.S.I. at 28 days Max W/C Ratio = 0.45 Mid-Range Water Reducer Required
Exposed interior floor slabs and interior slabs scheduled to receive carpet	Tr-Fn1	3500 P.S.I. at 28 days Max W/C Ratio = 0.45 Mid-Range Water Reducer Required
Interior floor slabs scheduled to receive thin-set flooring, resilient flooring and other flooring types, unless otherwise noted	Tr-Fn2	3500 P.S.I. at 28 days Max W/C Ratio = 0.45 Mid-range water reducer
Interior floor slabs scheduled to receive a polished surface, and where indicated	Tr-Fn3	3500 P.S.I. at 28 days Max W/C Ratio = 0.45 Mid-range water reducer
Interior floor slabs scheduled to receive wood flooring, and where indicated	Tr-Fn4	3500 P.S.I. at 28 days Max W/C Ratio = 0.45 Mid-range water reducer
Exterior walks, stoops, steps, aprons, and curbs; exterior formed concrete exposed to view; exterior concrete not otherwise indicated	NsBrm-Fn Grt-Cl-Fn	***4500 P.S.I.*** at 28 days 4.5% - 7.5% entrainment Max W/C Ratio = ***0.45***
Metal stair pan fill, toppings over precast deck	--	2500 P.S.I. at 28 days #8 Aggregate (maximum)
Flowable fill – Type I Utility Trench Backfill	--	50-100 PSI at 28 days Unconfined compression strength per ASTM D4832
Flowable fill – Type II (option) Under Foundations	--	85 PSI at 28 days Unconfined compression strength per ASTM D4832
Lean concrete fill at soft soils or over excavations (option)	--	1500 P.S.I. at 28 days

END OF SECTION

SECTION ***033510***
POLISHED CONCRETE FINISHING

GENERAL GUIDELINES

1.1 SECTION INCLUDES

A. This Section covers the performance characteristics and application procedures for polishing of concrete. The process involves grinding and buffing concrete surface to provide a sheen. Application of a liquid densifier provides a non-dusting surface resistant to surface absorption of liquids.

1.2 POLISHING MATERIALS

A. Liquid Densifier: Chemically reactive, waterborne solution of inorganic silicate or siliconate materials; odorless; colorless which hardens and densifies concrete surfaces to protect against abrasion, dusting, and absorption of liquids.

B. Joint Fillers: Two (2) component, 100 percent solids compound, with a minimum Shore D hardness of 50.

C. Color (Optional): Ready to use, penetrating, dye or reactive stain that chemically combines with cured concrete to produce permanent, variegated or translucent color effects or a hydrolyzed, lithium quartz or silicate compound, that works by penetrating and reacting with mineral compounds and/or siliceous materials to create a translucent or marbled color effects.

D. Polishing Equipment

1.3 POLISHED CONCRETE APPLICATION

A. Grind the concrete floor to within 2 to 3 inches of walls or obstructions with 16, 25, 40, 60, 80, and/or 150 grit, removing construction debris.

B. Apply material for color effects (optional).

C. Apply liquid densifier.

D. Polish the floor to desired sheen level.

E. Edges may be painted, honed, or polished.

LESSONS LEARNED

3.1 Polished concrete is gaining popularity as a moderate-duty concrete floor that is low maintenance and environmentally-friendly. Diamond polishing technology adapted from the dimension stone industry is used to produce a concrete floor with moderate to high-gloss shine.

A. Polished concrete is considered an environmentally-friendly choice for hard-surfaced flooring, eliminating resilient floor coverings, adhesives, sealers, and waxes that contain VOCs. The low-maintenance finish requires only regular damp mopping and occasional light polishing to restore gloss, without the need for periodic waxing, stripping, or chemical cleaning. Furthermore, the high reflectivity of the surface can reduce the amount of artificial lighting required to achieve a given level of illumination.

B. Existing concrete flat work also can be polished following patching and crack repair as required to produce a sound surface.

END OF SECTION

SECTION 033519

COLORED CONCRETE FINISHING

GENERAL GUIDELINES

1.1 SECTION INCLUDES

A. Qualitative requirements for chemically staining and sealing ***(or just sealing)*** concrete flatwork.

1.2 POLISHING MATERIALS

A. Liquid Densifier (optional): Chemically reactive, waterborne solution of inorganic silicate or siliconate materials; odorless; colorless which hardens and densifies concrete surfaces to protect against abrasion, dusting, and absorption of liquids.

B. Joint Fillers: Two (2) component, 100 percent solids compound, with a minimum Shore D hardness of 50.

C. Color ***(optional)***: Ready to use, penetrating, dye or reactive stain that chemically combines with cured concrete to produce permanent, variegated or translucent color effects or a hydrolyzed, lithium quartz or silicate compound, that works by penetrating and reacting with mineral compounds and/or siliceous materials to create a translucent or marbled color effects.

D. Sealer: Water based acrylic for sealing concrete where regular maintenance is planned. ***Designed to repel water, reduce scuffing and marring, allows substrate to breath, and produces a shine.***

1. Sealer shall be compatible with stain where stain is used.

END OF SECTION

SECTION 034100

PRECAST STRUCTURAL CONCRETE

GENERAL ***GUIDELINES***

1.1 SECTION INCLUDES

A. Qualitative requirements for precast reinforced concrete units.
1. Plant-cast, load bearing, double-wythe, insulated, structural precast concrete units with an architectural finish for use as exterior building envelope and structural elements.
2. Hollow-core slab and long-span plant-cast structural concrete units.

1.2 QUALITY ASSURANCE

A. Design Standard: PCI MNL 120

B. Quality-Control Standard: PCI MNL 116

1.3 MATERIALS

A. Form Liners (option)

B. Reinforcing Materials
1. Reinforcing Bars: Deformed, deformed low-alloy, or galvanized steel.
2. Steel Bar Mats***: Steel or low-alloy steel.***
3. Welded Wire ***Reinforcement***: Plain or deformed steel.

C. Prestressing ***Tendons***

D. Concrete Materials
1. Portland Cement: ASTM C ***150***, Type I or III.
2. Normal-Weight Aggregates: Except as modified by PCI MNL 116, ASTM C 33, with coarse aggregates complying with Class 4S.
3. Admixtures: As recommended by ***Design Professional***, unless otherwise noted.
4. ***Supplementary Cementitious Materials:***
   a. Fly Ash may be substituted for up to 20 percent of the total cementitious materials.
   b. Ground granulated blast-furnace slag may be substituted for up to 50% of the total cementitious materials.

E. Steel Connections
1. Finish: Painted, interior and galvanized for item in exterior wall or exposed to humidity above 50 percent.

F. Bearing Pads: As selected by Design Professional.

G. Rigid Insulation for Concrete Sandwich Panels: Extruded polystyrene rigid board.

H. Wythe Connectors for concrete sandwich panels: non-conductive, corrosion and alkali resistant, fiber composite wythe connectors, notched for retention.

I. Thin and half brick units and accessories.

J. ***Latex-portland cement pointing grout for thin-brick-unit joints.***

1.4 CONCRETE MIX

A. Compressive Strength (28 days): Normal-Weight Concrete: 5,000 psi

END OF SECTION

SECTION 034500

PRECAST ARCHITECTURAL CONCRETE

GENERAL GUIDELINES

1.1 SECTION INCLUDES

A. Qualitative requirements for architectural precast units.

1.2 QUALITY ASSURANCE

A. Design Standard: PCI MNL 120.

B. Quality-Control Standard: PCI MNL 117.

1.3 MATERIALS

A. Reinforcing Materials
1. Reinforcing Bars: Steel.
2. Steel Bar Mats: Steel.
3. Welded Wire Reinforcement: Plain steel.

B. Prestressing Strands

C. Concrete Materials
1. Portland Cement: ASTM C 150, Type I or III.
2. Supplementary Cementitious Materials: Fly ash and/or ground granulated blast-furnace slag.
3. Aggregates: Normal weight or lightweight.
a) Face-Mixture Coarse Aggregates: Uniformly graded.
4. Coloring Admixture, if required by Design Professional.
5. Admixtures: As recommended by Design Professional.

D. Steel Connections: Carbon-steel shapes and plates.
1. Finish: Galvanized.

E. Bearing Pads: As selected by Design Professional.

F. Grout: Sand cement.

1.4 CONCRETE MIXTURES

A. Compressive Strength (28 days):
1. Normal-Weight Concrete Face and Backup Mixtures: 5000 psi

END OF SECTION

SECTION 035113

CEMENTITIOUS WOOD FIBER DECKS

GENERAL ***GUIDELINES***

1.1 SECTION INCLUDES

A. Qualitative requirements for monolitic cementitious wood-fiber units for roof deck installation and subpurlin tees for tile decks.

1.2 MATERIALS

A. Cementitious Wood-Fiber Units

1. Composition: Chemically processed long wood fibers mixed with Inorganic Hydraulic Cement, pressure bonded to produce units of thicknesses and sizes indicated.

1.3 PRODUCTS

A. ***Monlithic*** Cementitious Wood-Fiber Units

1. Tile: 2 inch minimum thickness.
2. Plank: 2 inch minimum thickness.
3. Channel-Reinforced Panels: 2 inch minimum thickness.
4. Concealed Tee Plank: 3 inch minimum thickness

B. Composite Cementitious Wood-Fiber Units

1. Composite Tile: 2 inch minimum thickness.

2. Composite Plank: 2 inch minimum thickness.

3. Composite Channel-Reinforcement Plank: 2 inch minimum thickness.

C. Insulated Composite Cementitious Wood-Fiber Units

1. Insulated Composite Tile:

a) Tile Base Thickness: 2 inch minimum.

b) Insulation Thickness: Total thickness shall be as required to meet value established by Energy Modeling.

c) Insulation: Extruded polystyrene.

2. Insulated Composite Plank:

a) Base Thickness: 2 inch minimum thickness.

b) Insulation: Extruded polystyrene.

c) Insulation Thickness: Total thickness shall be as required to meet value established by Energy Modeling.

3. Insulated Composite Channel-Reinforced Plank:

a) Base Thickness: 2 inch minimum thickness.

b) Insulation: Extruded polystyrene.

c) Insulation Thickness: Total thickness shall be as required to meet value established by Energy Modeling.

D. Subpurlins: Hot-rolled steel bulb tees

1. Gypsum based grout should fill entire space between tile and bulb tee.

LEED SUGGESTIONS

2.1 Construction Waste Management: Products are typically cut to 1'-0" length increments at factory reducing or eliminating field cuts and waste at site. Products can be shipped without packaging for minimum site waste.

2.2 Certified Wood: Products can be FSC and SFI certified.

2.3 Regional Materials: Products are manufactured in Ohio.

END OF SECTION

SECTION 035216

LIGHTWEIGHT INSULATING CONCRETE

GENERAL ***GUIDELINES***

1.1 SECTION INCLUDES

A. Qualitative requirements for cast-in-place lightweight concrete roof insulation for roof decks.

1.2 MATERIALS

A. General: Low density concrete, with an oven-dry unit weight not exceeding 50 lb./cu.ft., placed with or without embedded rigid insulation (EPS). Material shall be composed of a slurry of cement, water, and expansion material to produce an insulating concrete of a specific density range.

B. Cement: Portland Cement.
1. Fly ash may be used up to 25 percent of Portland cement by weight.

C. Galvanized Plain-Steel Welded Wire Reinforcement.

D. Molded-Polystyrene Insulation Board.

1.3 PHYSICAL PROPERTIES

	Range II	Range III
Cast Density	34-42 pcf	42-50 pcf
Compressive Strength	200 psi	250 psi
Roof Membrane Type	nailed base sheet	fully adhered system

END OF SECTION

04 DIVISION

MASONRY

TABLE OF CONTENTS

DIVISION 04: MASONRY

042000	***Unit Masonry***
042250	Autoclaved Aerated Concrete (AAC) Masonry
042700	Glass Masonry Units
047200	Cast Stone

SECTION 042000

UNIT MASONRY

GENERAL GUIDELINES

1.1 SECTION INCLUDES

A. Qualitative requirements for unit masonry assemblies.
   1. Masonry mortar and mixing masonry assemblies.
   2. Masonry grout and mixing masonry grout.
   3. Masonry anchorage and reinforcement devices.
   4. Masonry accessories.
   5. Manufactured concrete masonry units; both loadbearing and nonloadbearing and intended for use in unit masonry assemblies with mortar.
      a. Concrete masonry units
      b. Sound absorbing concrete masonry units
      c. Sound diffusing concrete masonry units
      d. Decorative concrete masonry units
   6. Manufactured clay masonry units; both loadbearing and non-loadbearing.
      a. Brick
      b. Structural-Clay Facing Tile

1.2 QUALITY ASSURANCE

A. Masonry Standard: Comply with ACI 530.1 / ASCE 6 / TMS 602**,** unless otherwise noted.
   a. Provide a 2-inch minimum clear air-space.

B. Protection of Masonry: During erection, cover tops of walls, projections, and sills with waterproof sheeting at end of each day's work. Cover partially completed masonry when construction is not in progress.
   1. Extend cover a minimum of 24 inches down both sides and hold cover securely in place.
   2. Where one wythe of multiwythe masonry walls is completed in advance of other wythes, secure cover a minimum of 24 inches down face next to unconstructed wythe and hold cover in place.

C. Mockups: Build mock-ups to verify selections made under sample submittals and to demonstrate aesthetic effects and set quality standards for materials, execution, and aesthetic effect. Observation and evaluation of the mock-up shall be by the masonry installer, general trades contractor, A/E, CM, OSFC-PA, Commissioning Agent, window installer, ***testing agency, and air barrier certifier***.
   1. Build mock-up of typical wall area(s) as shown on Drawings including Movement Control Joints (Sealant Filled) 1'4" (minimum length), Air Barrier, Blocking for Window, Horizontal and Vertical Reinforcing Shelf Angles and Supports, Bond Beams and Lintels, Brick Ties and Anchors Flashing, End Dams, Weeps and Vents, Cavity Drainage Material (if required), Window Head, Sill and Jamb Details.
      a. Include a sealant-filled joint at least 16 inches long in each exterior wall mock-up.
      b. Include lower corner of window opening at upper corner of exterior wall mock-up. Make opening approximately 12 inches wide by 16 inches high.
      c. Include through-wall flashing installed for a 24-inch length in corner of exterior wall mock-up approximately 16 inches down from top of mockup, with a 12-inch length of flashing left exposed to view (omit masonry above half of flashing).

d. Mock-up shall include a complete through-wall penetration by each trade contractor including fire protection, plumbing, mechanical and electrical.

2. The window contractor shall provide and install in the mock-up wall a sample window of the type and profile used in the classrooms. (leaving portions of the perimeter exposed for inspection of the fasteners and air barrier transition to the masonry; some portions to receive final caulking inside and out)
3. Prior to starting general masonry cleaning, prepare mock-up for cleaning using the same cleaning materials and methods proposed for the Work.
4. Protect accepted mock-ups from the elements with weather-resistant membrane.
5. The construction of the mock-up shall be photographed or videotaped by the masonry contractor to be part of a presentation for groups of trades people as they join the project work force.
6. ***Refer to OSDM page 9101-5 for additional information.***

1.3 CONCRETE MASONRY UNITS

A. Concrete Masonry Units (CMU): Light weight, medium weight, or normal weight.

B. Concrete Building Brick

C. Sound Absorbing Concrete Masonry Unit (SACMU)
1. Face sizes, unit weights, and finish textures shall match those of required regular concrete masonry units.
2. Provide flared slots, metal septa, and incombustible fibrous cavity fillers of the following:
a. 8 inch (53 STC) and 12 inch (56 STC) thick walls.

D. Sound Diffusing Concrete Masonry Units (SDCMU)
1. Aggregate shall meet ASTM C90 and ASTM C129.
2. Fiberglass inserts shall be installed at the block plant to ensure proper positioning.

E. Decorative Concrete Masonry Units: Light weight, medium weight, or normal weight.
1. Finish: Exposed faces of the following general description matching color, pattern, and texture of Architect's samples:
a. Normal-weight aggregate, ground finish (not acceptable if used as a comparison for LFI calculations)
b. Normal-weight aggregate, split-face finish
c. Normal-weight aggregate, split-ribbed finish
d. Normal-weight aggregate, standard finish, scored vertically so units laid in running bond appear as square units laid in stack bond
e. Normal-weight aggregate, standard finish, triple scored vertically so units laid in running bond appear as vertical units laid in stacked bond

F. Prefaced Concrete Masonry Units: Light weight hollow or solid units with smooth resinous facing.

G. Integral Water Repellent: Provide units made with liquid polymeric, integral water-repellent admixture that does not reduce flexural bond strength.

1.4 BRICK

A. Face Brick: ASTM C 216
1. Grade and Unit Compressive Strength: Provide units with grade indicated below:
a. Grade: SW., Type FBX or FBS

B. Building (Common) Brick: ASTM C 62 and as follows:
   1. Grade and Unit Compressive Strength: Provide units with grade indicated below:
      a. Grade: MW or SW.
   2. Application: Use where brick is indicated for concealed locations.

1.5 STRUCTURAL-CLAY FACING TILE
A. Glazed Structural – Clay Facing Tile: ASTM C126, Grade S or SS.
B. Unglazed Structural – Clay Facing Tile: ASTM C212, Type FTX or FTS, Standard class.

1.6 STONE
A. Stone Trim Units: Limestone.

1.7 MORTAR MATERIALS
A. Portland Cement: ASTM C150, Type I or III, nonstaining, without air entrainment and of natural color or white, to produce the required color of mortar or grout.

B. Hydrated Lime: ASTM C207, Type S.

C. Portland Cement-Lime Mix: Packaged blend of portland cement complying with ASTM C150, Type I or III, and hydrated lime complying with ASTM C207.

D. Masonry Cement: ASTM C91. (optional)

E. Mortar Cement: ASTM C1329. (optional)

F. Aggregates: ASTM C144, except for joints less than 1/4 inch, use aggregate graded with 100 percent passing the No. 16 sieve.

G. Water: Potable.

H. Mortar Pigments: Natural and synthetic iron oxides and chromium oxides, compounded for use in mortar mixes.

I. Epoxy Pointing Mortar:

J. Integral Water Repellent Admixture (Exterior): An integral liquid polymeric admixture intended for use with concrete masonry units, containing integral water repellent.

1.8 MORTAR MIXES
A. Do not use calcium chloride in mortar or grout.

TABLE A1 - Guide for the Selection of Masonry Mortars* (Modified)

Location	Building Segment	Mortar Type
Exterior, above grade	loadbearing wall nonloadbearing wall, parapet wall, chimney and veneer wall	S N
Exterior, at or below grade	foundation wall, retaining wall, manholes, sewers, pavements, walks and patios	S
Interior	loadbearing wall nonloadbearing partitions	N N

* This table does not provide for many specialized mortar uses, such as reinforced masonry, acid-resistant mortars and fire box mortar.

1.9 GROUT MATERIALS

A. Portland Cement: ASTM C150, Type I.

B. Fine Aggregates: ASTM C404, clean, sharp, natural sand.

C. Coarse Aggregates: ASTM C404. Maximum aggregate size 3/4 inch.

D. Water: Potable.

E. Flyash: May be substituted for up to 20 percent of the total cementitious materials in the grout mix.

1.10 GROUT MIXES

A. Grout mixes shall be plant mix or factory blended (dry mix with water added at the site).

B. Do not lower the freezing point of grout by use of admixtures or anti-freeze agents.
1. Do not use calcium chloride in grout.

C. Grout for Unit Masonry: Comply with ASTM C476.
1. Fine Grout: 2500 psi average compressive strength at 28 days for 6 inches and smaller hollow concrete masonry units and between 2 wythes of masonry where space is less than 2 inches in width.

2. Coarse Grout: 2500 psi average compressive strength at 28 days for 8 inches and larger hollow concrete masonry units and between 2 wythes of masonry where space is 2 inches in width or wider.

1.11 CONTINUOUS WIRE REINFORCING AND TIES FOR MASONRY
A. Masonry Joint Reinforcement.

B. For single wythe and composite masonry, provide ladder type joint reinforcing.

C. For multi-wythe masonry, provide as follows:
1. When both wythes are to be constructed simultaneously:
a. Provide ladder type joint reinforcing.

2. When each wythe is to be constructed separately:
a. Provide adjustable ladder type joint reinforcing fabricated with two steel side rods, cross rods, eyes and double legged pintles. Longitudinal rods shall be spaced for each face shell of CMU; eye sections shall extend into walls cavity, and pintles shall rest upon bed joints of face brick.

1.12 ANCHORING DEVICES FOR MASONRY
A. Rigid Anchors: Where masonry is to be rigidly anchored to structural steel beams, provide galvanized steel straps, bars or rods welded to the steel beam and extending into the mortar joint.
B. Flexible Anchors: Where masonry is to be laterally supported from structural steel, while permitting only vertical movement or both vertical and horizontal movement, provide adjustable anchors.

1.13 REINFORCING BARS

A. Uncoated Steel Reinforcing Bars

1.14 FLASHING

A. Embedded Flashing Materials
1. Provide one of the following types of flashing materials:
a. Copper-Fabric Laminate.
b. Rubber Asphalt Sheet Flashing.
c. Elastomeric Thermoplastic Flashing.
d. EPDM Flashing.

2. Sheet Metal Drip Edge: Fabricated from stainless steel or copper with hemmed edge.
a. Application: Where drip edge is required per recommendations of NCMA-TEK 19-4, ***and at all through wall flashings.***
b. Embedded flashing materials should not be used for drip edges.

1.15 INSULATION
A. Insulation: Provide insulation as required to meet or exceed thermal performance required or modeled by ASHRAE Standard 90.1.
1. Primary insulation shall be one of the following:
a. Extruded-Polystyrene Board Insulation: ASTM C578, Type IV.
b. Closed-cell polyurethane foam insulation.
c. Closed-cell polyisocyanurate foam core insulation: ASTM C1289, Type I or II, Class 1 or 2, Grade 2 (20 psi).
d. ***Foil faced closed cell rigid foam insulation***.
2. Secondary, if required for thermal resistance:
a. Loose-Granular Fill Insulation.
b. Molded-Polystyrene Insulation Units.
c. Polyurethane Spray Foam (Foamed-in-Place Insulation).

1.16 RELATED MATERIALS
A. Additional accessories, including compressible fillers, preformed control-joint gaskets, bond breaker strips, weep/vent products, cavity drainage material, reinforcing bar positioners and cleaners may be used at the discretion of the Project Designer to provide a complete weathertight masonry assembly.

1.17 CONTROL JOINTS – EMPIRICAL METHOD
A. Concrete Masonry Units

TABLE 1
CONTROL JOINT SPACING FOR RECOMMENDED ABOVE GRADE EXPOSED CONCRETE MASONRY WALLS (NCMA TEK-10-2B)

Distance between joints should not exceed the lesser of:	
Length to height ratio	or ft (m)
1-1/2	25 (7.62)

Notes:
1. Table values are based on the use of horizontal reinforcement having an equivalent area of not less than 0.025 in.^{2}/ft. (52.9 mm^2/m) of height to keep unplanned cracks closed.

2. Criteria apply to all concrete masonry units.
3. This criteria is based on experience over a wide geographical area. Control joint spacing should be adjusted up or down where local experience justifies but no farther than 25 ft. (7.62 m).
   a. Where concrete masonry is used as backup of other materials:
      1) Extend control joints through facing if it is rigidly bonded (masonry bond).
      2) Control joint need not extend through facing when bond is flexible (metal ties).
   b. Provide a horizontal slip plane where reinforced lintel beam terminates at a control joint. Provide horizontal slip plane at junction of roof and load-bearing masonry terminating at a control joint.

B. Expansion Joints in Brick: Provide in accordance with BIA Technical Note No. 18B.

1.18 FLASHING AND WEEP HOLES

A. General: Installed embedded flashing and weep holes in masonry at shelf angles, lintels, ledges, other obstructions to downward flow of water in wall, and where indicated.
   1. Install concealed through-wall flashing in accordance with SMACNA "Architectural Sheet Metal Manual" Chapter 4 Flashing and with NCMA TEK Bulletins 19-4 and 19-5 details to ensure water resistant masonry construction.
   2. Installed preformed corners and end dams, under flexible flashing membrane, bedded in sealant (as approved by manufacturer of preformed corner, end dams, and flexible flashing for compatibility) in appropriate locations along wall.

1.19 SOURCE QUALITY CONTROL

A. Masonry Contractor shall water test cavity to verify all water is draining to the exterior through the weeps before continuing with exterior wythe before capping wall.
   1. Contractor shall perform tests in the presence of CM, A/E, testing lab representative, and General Contractor.
      a. Do not proceed more than 3 veneer courses above flashing without testing, observation, and picture documentation by testing lab representative.
   2. Contractor shall hold water hose and with standard water pressure force water into the cavity at a cell vent so water can be observed coming out adjacent weeps for a period of at least 5 minutes. Contractor shall continue down the wall to the next cell vent where a weep did not indicate water wicking out and continue this process until the entire length of flashing is tested.
   3. Where water is observed inside the building or outside the building away from the weeps, masonry units shall be removed and flashing re-inspected and repaired.
   4. Water test shall be re-performed where flashing was repaired.

<u>LEED SUGGESTIONS</u>

2.1 Masonry normally generates large volumes of construction waste. However, masonry is clean waste and is, therefore, easily recycled as fill material.

LESSONS LEARNED

3.1 Flashing: Through-wall flashing and weep holes are detailed and installed in exterior masonry wall construction to collect and divert moisture to the outside of the wall that penetrates the exterior veneer. Through-wall flashing must be provided at the base of the wall, at roof and wall intersections, and at the top of parapets. Flashing is also needed over and under door and window openings, at shelf angles, and at other horizontal discontinuities in the cavity.

A. One non-ideal design issue that has surfaced is when the top of the roofing counter-flashing is not in the same joint as the bottom of the through-wall flashing. This causes some masonry to be unprotected. Since all masonry is permeable to water, water permeating this unprotected masonry can possibly enter the building. Ideally, the design would provide the through-wall flashing drip edge and the top of the roof counter-flashing in the same joint, thereby leaving no masonry wall area unprotected.

B. Flashing details that should be included to avoid construction deficiencies include:

1. Roof-wall flashing integration along sloped roofs.
2. Stepped counter-flashing along sloped roof-wall intersections.
3. Stepped roof-wall flashing and counter-flashing where the elevation of a flat roof changes.
4. Flashing integration where parapets intersect with walls.
5. End dams.

3.2 Weeps or Vents:

1. Weeps or vents installed at the top of walls, under window sills, etc. can aid in the venting of the cavity if properly installed and detailed and should be considered.

3.3 Penetrations of joists, beams, etc:

1. Joists, beams and other items that penetrate the masonry wall should be sealed completely with grout on both sides of the wall to prevent rotation and to ensure that the cavity remains completely separated from the interior of the wall and building.

Table 1 – Calculated STC Ratings for Concrete Masonry Walls (ref. 1)

Nominal Unit thickness, In.(mm)[b]	Density, pcf (kg/m^3)	STC[a] Hollow unit	Grout-filled unit	Sand-filled unit	Solid unit
4 (100)	85 (1,362)	43	46[c]	45	45
	95 (1,522)	44	46[c]	45	45
	105 (1,682)	44	46[c]	46	46
	115 (1,842)	44	47[c]	46	46
	125 (2,002)	45	47[c]	46	47
	135 (2,162)	45	47[c]	47	47
6 (150)	85 (1,362)	44	49	47	47
	95 (1,522)	44	50	48	48
	105 (1,682)	45	50	48	49
	115 (1,842)	45	51	49	50
	125 (2,002)	46	51	49	51
	135 (2,162)	46	52	50	51
8 (200)	85 (1,362)	45	53	50	50
	95 (1,522)	46	53	51	51
	105 (1,682)	46	54	51	52
	115 (1,842)	47	55	52	53
	125 (2,002)	47	55	52	54
	135 (2,162)	48	56	53	55
10 (250)	85 (1,362)	46	56	53	53
	95 (1,522)	47	57	53	54
	105 (1,682)	48	58	54	55
	115 (1,842)	48	58	55	57
	125 (2,002)	49	59	56	58
	135 (2,162)	50	60	56	59
12 (300)	85 (1,362)	47	60	55	55
	95 (1,522)	48	61	56	57
	105 (1,682)	49	62	57	59
	115 (1,842)	49	62	58	60
	125 (2,002)	50	63	59	62
	135 (2,162)	51	64	59	63

[a] Based on: grout density of 140 lb/ft^3 (2,243 kg/m^3); sand density of 90 lb/ft^3(1,442 kg/m^3): unit percentage solid from mold manufacturer's literature for typical units (4-in.(100-mm) 73.8% solid, 6-in.(150-mm) 55.0% solid, 8-in.(200-mm) 53.0% solid, 10-in.(250-mm) 51.7% solid, 12-in. (300-mm) 48.7% solid). STC values for grout-filled and sand-filled units assume the fill materials completely occupy all voids in and around the units. STC values for solid units are based on all mortar joints solidly filled with mortar.

[b] Metric dimensions reflect equivalent metric unit sizes as opposed to direct SI conversions. Therefore, STC ratings of these hard metric units may be slightly different from the ratings listed here.

[c] Because of small core size and the resulting difficulty consolidating grout, these units are rarely grouted.

END OF SECTION

SECTION 042250

AUTOCLAVED AERATED CONCRETE (AAC) MASONRY

GENERAL ***GUIDELINES***

1.1 SECTION INCLUDES

A. Qualitative requirements for Autoclaved Aerated Concrete (ACC) Masonry Block

1.2 AUTOCLAVED AERATED CONCRETE (ACC) BLOCKS

A. AAC Masonry Block: ASTM C1386 for tolerances, density, and compressive strength.

1.3 ACCESSORIES

A. Mortar Materials: ASTM C 270.

B. Reinforcement: Continuous wire reinforcing, horizontal wall reinforcing.

C. Veneer Ties
1. Anchors
2. Fasteners

D. Concealed Flashing Materials
1. Copper-Fabric Laminate
2. Rubber Asphalt Sheet Flashing
3. EPDM Flashing

LESSONS LEARNED

2.1 Autoclaved aerated concrete (AAC) is a type of lightweight precast concrete, prevalent in Europe, Asia, and in the Middle East and recently available through manufacturing facilities in the United States. It is made with portland cement, silica sand or fly ash, lime, water, and aluminum powder or paste. The aluminum reacts with the products of hydration to release millions of tiny hydrogen gas bubbles that expand the mix to approximately five times the normal volume. When set, the AAC is cut into blocks or slabs and steam-cured in an autoclave.

2.2 AAC is significantly lighter (about 1/5th the weight of traditional concrete) than normal concrete and can be formed into blocks or panels. Lighter weight concretes generally have greater fire and thermal resistance, but less strength than traditional normal weight concrete.

END OF SECTION

SECTION 042700

GLASS MASONRY UNITS

GENERAL ***GUIDELINES***

1.1 SECTION INCLUDES

A. Qualitative requirements for glass block set in mortar.

1.2 GLASS BLOCK

A. Hollow Glass Block: Hollow units made from transparent glass, with manufacturer's standard edge coating.

B. Solid Glass Block: Colorless, transparent, solid glass block with smooth or stippled faces and manufacturer's standard edge coating.

1.3 MORTAR MATERIALS

A. Portland Cement.

B. Hydrated Lime.

C. Portland Cement-Lime Mix.

D. Aggregrate.

E. Water-Repellent Admixture: Provide at all exterior joints.

1.4 ACCESSORIES

A. Panel Reinforcement: Ladder-type units, butt welded, not lapped and welded.
   1. Interior Walls: Hot-dip galvanized, carbon-steel wire.
   2. Exterior Walls: Hot-dip galvanized, carbon or stainless-steel wire.

B. Panel Anchors: Hot-dip galvanized after fabrication.

END OF SECTION

SECTION 047200

CAST STONE

GENERAL ***GUIDELINES***

1.1 SECTION INCLUDES

A. Qualitative requirements for cast Stone Trim

1.2 QUALITY ASSURANCE

A. Manufacturer Qualifications: Manufacturer is a producing member of the Cast Stone Institute, or has on file and follows a written quality-control plan that includes all elements of the Cast Stone Institute's "Quality Control Procedures Required for Plant Inspection."

1.3 CAST STONE MATERIALS

A. General: Comply with ASTM C1364
1. Portland Cement.
2. Aggregates.

B. Reinforcement: Use galvanized or epoxy-coated reinforcement when covered with less than 1½ inches of cast stone material.

C. Embedded Anchors: Hot-dip galvanized steel.

D. Mortar: Portland cement and lime, masonry cement, or mortar cement.

1.4 FABRICATION

A. Provide units that are resistant to freezing and thawing.

LESSONS LEARNED

2.1 The term 'cast stone' is defined by the Cast Stone Institute and in ASTM C 1364, Specification for Architectural Cast Stone, as architectural precast concrete building units intended to simulate natural cut stone. Cast stone is typically distinguished from other architectural precast concrete by its size (masonry- or stone-sized units rather than panels) and its finish, which is intended to simulate stone rather than look like concrete. Cast stone is usually made with more carefully graded aggregate and less water than most architectural precast concrete, giving it a higher compressive strength, lower water absorption, and a more void-free surface than most architectural precast concrete.

2.2 Cast stone is used, like limestone or sandstone, as a masonry material for architectural features and trim or as a facing for buildings or other structures. By carefully selecting aggregates, cement, and pigments and through controlled manufacturing techniques, cast stone can be made to resemble various varieties of limestone, sandstone, quartzite, granite, and other unpolished, cut building stones. This ability to simulate natural cut stone can be used to replace damaged natural stone in historic renovation work where the original stone is no longer available.

2.3 Cast stone units must be designed within the manufacturing and handling limitations of the production process. Keep units generally rectangular in cross section; avoid L or U shaped units. Avoid long thin units; length should not exceed 15 times the least dimension and should generally be no more than 96 inches. Thickness should never be less than 2 inches, and 3 inches, as a minimum, is even better. Curved sections should be limited to no more than 48 inches in length. Generally, size units so that their volume is about 1 ½ to 2 cu.ft. Bear in mind the casting process when designing with cast stone; the profiles of units must include adequate "draft", which is the slope on surfaces that allows the cast stone unit to be removed from the mold. Also remember that repetition is the key to economy in any molded product; unless standard cast stone units are used, try to use as few types as feasible with as much repetition as possible.

END OF SECTION

THIS PAGE HAS BEEN INTENTIONALLY LEFT BLANK.

05 METALS

DIVISION

TABLE OF CONTENTS

DIVISION 05: METALS

051200	Structural Steel Framing
052100	Steel Joists Framing
053100	Steel Decking
054000	Cold-Formed Metal Framing
055000	Metal Fabrications
055100	Metal Stairs
055213	Pipe and Tube Railings

SECTION 051200

STRUCTURAL STEEL FRAMING

GENERAL GUIDELINES

1.1 SECTION INCLUDES

A. Qualitative requirements for structural steel, shop painting, grout, and related items necessary to complete the Work indicated.

1.2 QUALITY ASSURANCE

A. Quality Standards: AISC 303 and 360.

B. All load-bearing structural steel shall be fabricated and produced using only steel made in the United States in accordance with Sections 153.011 and 153.99 of the Ohio Revised Code (ORC).

1.3 MATERIALS

A. Structural Steel Shapes: W-shapes, channels, angles, M-shapes, S-shapes, plate and bar, cold-formed hollow structural sections, and steel pipe.
   1. W-Shapes: ASTM A992.
   2. Channels, Angles, M- and S-Shapes: ASTM A36 or ASTM A572, Grade 50.
   3. Plate and Bar: ASTM A36 or ASTM A572, Grade 50.

B. Steel Casings

C. Steel Forgings

D. Bolts, Nuts, and Washers: High strength and tension control, high strength

E. Anchor Rods: Unheaded and headed rods, nuts, plate washers, and washers.

F. Connectors: Shear connectors, threaded rods, clevises, turnbuckles, eye bolts and nuts and sleeve nuts.

G. Structural Slide Bearings

H. Primer: Zinc oxide, oil.
   1. Coordinate primers with topcoats, requirements for slip critical joints, and limitations of sprayed fire resistive materials.

I. Grout: Metallic, shrinkage resistant and nonmetallic, shrinkage resistant.

J. Bituminous Coating: Cold applied asphalt mastic.

1.4 SHOP PRIMING

A. Shop prime steel surfaces except the following:
   1. Surface embedded in concrete or mortar.
      a. Apply a bituminous coating to steel embedded in concrete or mortar.

2. Surfaces to be field welded.
3. Surfaces to be high strength bolted with slip critical connections.
4. Surfaces to receive sprayed fire resistive materials (applied fireproofing).
5. Galvanized surfaces.

1.5 GALVANIZING

A. Galvanize lintels, shelf angles, and welded door frames attached to structural steel frame and located in exterior walls.

1.6 INSTALLATION

A. Erect structural steel in compliance with the AISC "Specifications and Code of Standard Practice."
   1. OSHA safety practices for steel erection per Federal Register 29 CFR 1926, Subpart R.

LEED SUGGESTIONS

2.1 LEED credits may be obtained under Materials and Resources for using materials with recycled content. The requirements are based on a cost-based formula for the total recycled content of all materials used on the project, excluding mechanical, electrical, and plumbing components and specialty items such as elevators, so that recycled content in high-cost items is significant. For steel-framed buildings, the recycled content of the steel goes a long way toward meeting the requirements for these credits.

2.2 The Steel Recycling Institute indicated that hollow structural shapes and steel plates are made by basic oxygen furnace method which typically has 23% post consumer recycled content and 1.5% preconsumer recycled content; rolled structural shapes are made by the electric arc furnace method, which typically has 57.5% postconsumer recycled content and 6.5% pre-consumer recycled content. The LEED Credit Interpretations allow the use of 25% for steel without any documentation, but for structural steel it is very worthwhile to obtain the required documentation because structural steel usually consists primarily of rolled structural shapes that have a much higher recycled content.

2.3 U.S.-EPA Comprehensive Procurement Guidelines (CPG) discusses steel manufactured in either a Basic Oxygen Furnace (BOF) or an Electric Arc Furnace (EAF). Steel from the BOF process contains 25-30% total recovered materials, of which 16% is post-consumer steel.

LESSONS LEARNED

3.1 A common coordination problem is the finishing of steel lintels and shelf (relieving) angles. Division 05, Section "Metal Fabrications" requires galvanizing of exterior loose-steel lintels or shelf angles; Division 05, Section "Structural Steel Framing" may require shop priming of structural steel members. If lintels or shelf angles are attached to the structural-steel frame, the steel fabricator may shop primer them unless the Contract states otherwise. If the Designer intends these lintels or shelf angles to be galvanized, retain this requirement in Division 5, Section "Structural Steel Framing".

END OF SECTION

SECTION 052100

STEEL JOISTS FRAMING

GENERAL GUIDELINES

1.1 SECTION INCLUDES

A. Qualitative requirements for steel joists, accessories, and related items necessary to complete to the Work indicated.

1.2 QUALITY ASSURANCE

A. Manufacturer Qualifications: A firm experienced in manufacturing joists similar to those indicated for this Project and with a record of successful in–service performance.

1. Manufacturer must be certified by SJI to manufacturer joists to those indicated for this Project and with a record of successful in –service performance.
2. Assumes responsibility for engineering special joists to comply with performance requirements. This responsibility includes preparation of shop drawings and comprehensive engineering analysis by a qualified professional engineer.
3. Professional Engineer Qualifications: A professional engineer who is legally authorized to practice in jurisdiction where Project is located and who is experienced in providing engineering services of the kind indicated. Engineering services are defined as those performed for installation of joists that are similar to those indicated for this Project in material, storage, and extent.

1.3 MATERIALS

A. Steel: Comply with SJI and AISC “Standard Specifications.”

B. Bolts: Carbon or high-strength carbon steel.

1. Finish: Plain, uncoated.

C. Primer: SSPC – Paint 15.

1. Coordinate primer with topcoats and sprayed fire-resistive materials and primers.

LEED SUGGESTIONS

2.1 Refer to Division 5, Section “Structural Steel Framing”.

LESSONS LEARNED

3.1 Low-sloped roofing requires a roofing slope of at least ¼ inch per 12 inches. Besides using tapered insulation ($$$), measures to eliminate or reduce unwanted ponding of water on the roof include sloping joists to a low point or specifying joists with pitched top chords. Pitch may be one way where slope is in one direction or two ways where slope is in both directions.

A. Except for K-series joists that have top chords fabricated parallel or without pitch as standard, steel joists and joist girders may be fabricated with a top-chord pitch of 1/8 inch per 12 inches. This standard top-chord pitch will not be sufficient alone to meet the minimum ¼ inch per 12 inches (1:48) slop requirement.

3.2 Where shop priming is not permitted (were sprayed fire-resistive material is to be applied), distinguish locations of primed and unprimed joists on the drawings.

END OF SECTION

SECTION 053100

STEEL DECKING

GENERAL ***GUIDELINES***

1.1 SECTION INCLUDES

A. Qualitative requirements for metal floor and roof deck of fluted, ribbed, and cellular configurations; composite decks of metal and acoustical insulation; anchors, closures, and related accessories.

1.2 MATERIALS

A. Type: Steel for galvanized metal deck, ASTM A 653, structural quality Grade 33 or higher, G60 zinc coating, unless otherwise noted.
   1. Noncomposite steel form deck, when design of concrete slab meets all loading requirements without assistance from steel deck, engineer may reduce galvanized coating to G30.
   2. Note: Prime-painted decking is not acceptable.

B. Accessories: Flexible closure strips, pour stops, girder fillers, column closures, end closures, Z-closers, cover plates, and sump plate.

1.3 FABRICATION

A. Decking, General: Fabricate panels to comply with SDI Specifications and Commentary in SDI Publication No. 30.

B. Acoustical Roof Deck Units: ***NRC as determined by Designer.***

LEED SUGGESTIONS

2.1 Refer to Division 05, Section "Structural Steel Framing".

END OF SECTION

SECTION 054000

COLD-FORMED METAL FRAMING

GENERAL ***GUIDELINES***

1.1 SECTION INCLUDES

A. Qualitative requirements for bracing, fasteners, and related accessories for light gauge, loadbearing metal elements.

1.2 SYSTEM DESCRIPTION

A. Design Requirements: Calculate structural characteristics of cold-formed metal framing according to AISI's "Specification for The Design of Cold-Formed Steel Structural Members" ***and its "Standard for Cold-Formed Steel Framing – General Provisions".***
   1. Design exterior nonaxial load bearing framing to accommodate lateral deflection without regard to contribution of sheathing materials.
   2. Headers: Design according to AISI's "Standard for Cold-Formed Steel Framing – Header Design."
   3. Roof Trusses: Design according to AISI's "Standard for Cold-Formed Steel Framing – Truss Design."
      a. Note: Prefabricated trusses that meet the qualitative requirements are acceptable.

B. Performance Requirements: Engineer, fabricate, and erect cold-formed metal framing to withstand design loads within limits and under conditions required.
   1. Design framing systems to withstand design loads without deflections greater than the following:
      a. Cold-Formed Metal Framing: Lateral deflection of 1/240 of the wall height, unless otherwise noted.
         1) Limit deflection to 1/600 when supporting masonry.
      b. Floor Joists: Vertical deflection of 1/480 for live loads and 1/360 for total loads of span.
      c. Ceiling Joists: Vertical deflection of 1/240 of the span.
      d. Roof Trusses: Vertical deflection of 1/240 of the span.

1.3 COLD-FORMED METAL FRAMING MATERIALS

A. Galvanized Steel Sheet: ASTM A 1003, Structural Grade, Type H, metallic coated of grade and coating, and as follows:
   1. Coating Designation: G 60 (Z 275), unless otherwise noted.
      a. Provide G90 where studs backup masonry, and where indicated.
   2. Grade: As required for structural performance.

B. System Components: With each type of metal framing required, provide manufacturer's standard steel runners (tracks), blocking, lintels, clip angles, shoes, reinforcements, fasteners, and accessories as recommended by manufacturer for applications indicated, as needed to provide complete metal framing system.
   1. Steel Sheet for Vertical Deflection and Drift Clips: ASTM A 653, structural steel, zinc coated, of grade and coating as follows:

a. Grade: As required by structural performance.
b. Coating: G60.

C. Framing Accessories: Supplementary framing, bracing, bridging, and solid blocking, web stiffeners, gusset plates, stud kickers, girts, joist hangers, and end closures.

D. Insulation for Inaccessible Voids.

END OF SECTION

SECTION 055000

METAL FABRICATIONS

GENERAL GUIDELINES

1.1 SECTION INCLUDES

A. Qualitative requirements for metal items fabricated from standard metal shapes and plates that are not classified in other locations.

1.2 PRODUCTS

A. Materials: Steel plates, shapes, and bars. Steel tubing, steel pipe, slotted channel framing, iron castings, and aluminum.

B. Miscellaneous Framing and Supports: Galvanized where indicated.
1. Steel framing and supports for ceiling-hung toilet compartments, operable partitions, overhead doors, overhead grilles, countertops, and mechanical and electrical equipment.
2. Elevator machine beams, hoist beams.
3. Steel shapes for supporting elevator door sills.

C. Shelf Angles: Galvanized at exterior walls.

D. Metal Ladders - Including Elevator Pit Ladders: Steel, unless otherwise noted.
1. Exterior ladders: Galvanized or aluminum.
2. Provide fixed, permanent ladders on wall9s) for access to all low-sloped roof areas.

E. Ladder Safety Cages: Match ladder.

F. Alternating Tread Devices: Steel.

G. Metals Ships' Ladders: Steel.

H. Metal Floor Plate: Steel.

I. Structural-Steel Door Frames:
1. Exterior frames galvanized.

J. Miscellaneous Steel Trim: Steel angle corner guards, steel edgings, and loading-dock edge angles.
1. Exterior trim galvanized.

K. Metal Bollards: Schedule 40 steel pipe.

L. Pipe and Downspout Guards.
1. Galvanized.

M. Abrasive Metal, Nosings, Treads, and Thresholds: Cast iron, cast aluminum, or extruded aluminum.

N. Metal Downspout Boots: Cast iron or aluminum.

O. Loose Bearing and Leveling Plates, Galvanized.

P. Loose Steel Lintels, Galvanized at Exterior Walls.

Q. Steel Weld Plates and Angles not specified in other sections, for casting into concrete.

LEED SUGGESTIONS

2.1 Refer to Division 05, Section “Structural Steel Framing”.

END OF SECTION

SECTION 055100

METAL STAIRS

GENERAL ***GUIDELINES***

1.1 SECTION INCLUDES

A. Qualitative requirements for metal stairs.
   1. Railings attached to metal stairs or attached to walls adjacent to metal stairs may be added to this section.

1.2 MATERIALS

A. Abrasive Nosings: Extruded aluminum.

B. Stringers: Steel channels or tubes.
   1. Plate strings are not acceptable.

C. Metal-Pan Stairs: Uncoated cold-rolled or uncoated hot-rolled.

D. Metal Bar-Grating Stairs: ½ inch maximum opening.
   1. For service and exterior applications.

E. Metal Floor Plate Stairs: Rolled steel.
   1. For service applications.

1.3 FINISHES

A. Hot-dip galvanize items exposed to exterior or greater than 75% relative humidity.

END OF SECTION

SECTION 055213

PIPE AND TUBE RAILINGS

GENERAL GUIDELINES

1.1 SECTION INCLUDES

A. Qualitative requirements for pipe railings and guards.

1.2 METALS

A. Steel and Iron
1. Steel Pipe
a. Black finish, unless otherwise indicated.
b. Galvanized finish for exterior installations and where indicated.
2. Steel Tubing: Cold-formed steel tubing.
3. Steel Plates, Shapes, and Bars.
4. Iron Castings.
5. Expanded Metal.
6. Perforated Metal.
7. Woven-Wire Mesh.

B. Aluminum
1. Extruded Bars and Tubing.
2. Extruded Structural Pipe and Round Tubing.
3. Plate and Sheet.
4. Castings.
5. Perforated Metal.
6. Woven-Wire Mesh.

1.3 FABRICATION

A. Changes in Direction of Members: By bending or by inserting prefabricated fittings.

B. Connections: Either welded or non-welded.

C. Infill: Provide either vertical picket, expanded metal, perforated metal, or woven-wire mesh.

D. Toe Boards.

LEED SUGGESTIONS

2.1 Refer to Division 5, Section "Structural Steel Framing".

LESSONS LEARNED

3.1 Guard rail infill must be designed so a 4-inch sphere cannot pass through it, as to comply with code requirements. Horizontal rails as infill can be readily climbed by children and should be avoided. Economical options for infill include vertical pickets, expanded metal, perforated metal, or woven-wire mesh.

END OF SECTION

06 DIVISION

WOODS, PLASTICS, AND COMPOSITES

TABLE OF CONTENTS

DIVISION 06: WOODS, PLASTICS, AND COMPOSITES

061000	***Rough Carpentry***
061600	***Sheathing***
062000	Finish Carpentry
064023	Interior Architectural Woodwork

SECTION 061000

ROUGH CARPENTRY

GENERAL GUIDELINES

1.1 SECTION INCLUDES

A. Qualitative requirements for miscellaneous wood framing, incidental rough carpentry required for support or attachment of other construction, pressure preservative treated and fire retardant treated wood.

1.2 PRODUCTS

A. Lumber
1. Maximum moisture content: 19 percent.
2. Factory mark each piece of lumber with grade stamp.

B. Boards
1. Maximum moisture content: 19 percent.

C. Fasteners: Hot-dip galvanized or stainless steel where exposed to weather, in ground contact, in contact with treated wood, or in area of high relative humidity.

1.3 WOOD PRESERVATIVE TREATED MATERIALS

A. Preservative Treatment by Pressure Process: AWPA U1; Use Category UC2 for interior construction not in contact with the ground, Use Category UC3b for exterior construction not in contact with the ground, and Use Category UC4a for items in contact with the ground.
1. Preservative Chemicals: Acceptable to authorities having jurisdiction and containing no arsenic or chromium. Do not use inorganic boron (SBX) for sill plates.

1.4 FIRE RETARDANT TREATED MATERIALS

A. Fire-Retardant-Treated Lumber and Plywood by Pressure Process: Products with a flame spread index of 25 or less when tested according to ASTM E 84, and with no evidence of significant progressive combustion when the test is extended an additional 20 minutes, and with the flame front not extending more than 10.5 feet beyond the centerline of the burners at any time during the test.
1. Use treatment that does not promote corrosion of metal fasteners.
2. Exterior Type: Treated materials shall comply with requirements specified above for fire-retardant-treated lumber and plywood by pressure process after being subjected to accelerated weathering according to ASTM D 2898. Use for exterior locations and where indicated.
3. Interior Type A: Treated materials shall have a moisture content of 28 percent or less when testing according to ASTM D 3201 at 92 percent relative humidity. Use where exterior type is not indicated.

LESSONS LEARNED

3.1 Increased corrosion of steel fasteners is a concern with preservative treatments, especially those containing ammonia and higher concentrations of copper (which will generally replace those containing arsenic). For this reason, hot-dip galvanized steel or stainless steel fasteners should be used with pressure-preservative-treated lumber.

3.2 WOOD PRESERVATIVE TREATMENT

A. Where carpentry may be subject to deterioration by moisture or insect attack, consider using pressure-preservative-treated material. Provide provisions for preservative-treated wood in locations required by building codes and in certain locations where wood should always be treated, such as wood used with roofing and flashing, on the damp side of vapor ***retarders*** and waterproofing, and items such as sills, sleepers, furring, blocking, and stripping if in contact with masonry or concrete located below grade. Provisions for treating wood in other locations should be added as required on a project-by-project basis. If the additional locations for the use of treated wood are too complex to describe in the specifications, identify them by notes on the Drawings.

B. Arsenic has been used in most of the treatment chemicals used for treating wood used in building construction since the 1970's, when the use of pentachlorophenol was largely eliminated. Some of the treatment chemicals that contain arsenic also contain chromium. The wood treatment industry has voluntarily phased out the use of the most common arsenic-based treatment (chromated copper arsenate, also called CCA) for treated wood intended for residential and similar uses, although the EPA has not declared pressure-treated wood that contains arsenic to be hazardous. The phase out required that wood treated after 2003 not contain CCA. Because the phase-out applied to residential use, CCA has generally been eliminated from use with all dimension lumber, its used being largely restricted to utility poles and piling. The phase-out does not apply to ACZA (ammoniacal copper zinc arsenate), which also contains arsenic, and which is often used to treat Douglas fir and other species that are difficult to treat, due to their high density and resultant poor absorption of treatment chemicals.

C. Boron is effective for controlling fungi, molds, and insects such as termites that use these wood-destroying organisms to break down and digest wood fibers. Boron is also relatively safe for human beings and animals and is inexpensive. The one problem with boron is that its compounds are very water soluble. It is easy and inexpensive to treat wood with boron, but the wood must be protected from getting wet. For most of the building framing, which will be enclosed in the finished building, boron treatment is ideal, for protection against termites, but care must be exercised to ensure that the treatment is not washed out by rain before the framing can be covered. If boron treatment is used, provisions should be included for spray treatment by an exterminator of wood that has become wet.

END OF SECTION

SECTION 061600

SHEATHING

GENERAL GUIDELINES

1.1 SECTION INCLUDES

A. Qualitative requirements for wall sheathing, roof sheathing, ***vented nailboard,*** building wrap, sheathing joint and penetration treatment and flexible flashing at openings in sheathing.

1.2 WOOD PANEL PRODUCTS, GENERAL

A. Plywood: Either DOC PS 1 or DOC PS 2, unless otherwise indicated.

1.3 PRESERVATIVE-TREATED PLYWOOD

A. Preservative Treatment by Pressure Process: AWPA U1; Use Category UC2 for interior construction not in contact with the ground, Use Category UC3b for exterior construction not in contact with the ground, and Use Category UC4a for items in contact with the ground.
   1. Preservative Chemicals: Acceptable to authorities having jurisdiction and containing no arsenic or chromium.

1.4 FIRE-RETARDANT-TREATED PLYWOOD

A. Fire-Retardant-Treated Plywood by Pressure Process: Products with a flame spread index of 25 or less when tested according to ASTM E 84, and with no evidence of significant progressive combustion when the test is extended an additional 20 minutes, and with the flame front not extending more than 10.5 feet beyond the centerline of the burners at any time during the test.
   1. Exterior Type: Treated materials shall comply with requirements specified above for fire-retardant-treated plywood by pressure process after being subjected to accelerated weathering according to ASTM D 2898. Use for exterior locations and where indicated.
   2. Interior Type A: Treated materials shall have a moisture content of 28 percent or less when testing according to ASTM D 3201 at 92 percent relative humidity. Use where exterior type is not indicated.

1.5 WALL SHEATHING

A. Plywood Wall Sheathing
B. Glass-Mat Gypsum Wall Sheathing
C. Cellulose Fiber-Reinforced Gypsum Sheathing
D. Extruded-Polystyrene-Foam Wall Sheathing
E. Foil Faced Closed Cell Rigid Foam Wall Sheathing

1.6 ROOF SHEATHING
A. Plywood Roof Sheathing: Exterior, Structural I sheathing.
   1. Provide 5/8 inch nominal thickness for 24 inch rafter spacing.

B. Oriented-Strand-Board Roof Sheathing: Exposure 1, Structural 1 sheathing.
   1. Provide 5/8 inch nominal thickness for 24 inch rafter spacing.

C. Composite Nail Base Insulated Roof Sheathing
   1. Type: Vented
   2. Board Insulation: Either polyisocyanurate or extruded polystyrene
   3. Oriented Strand Board: Board shall not exceed its APA span rating based on the spacing of the spacer blocks.
      a. The spacer blocks within the ventilation space shall not exceed 10 percent of the panel area and will allow air to flow both up the slope and horizontally. The air space shall be 2 inches minimum.

1.7 FASTENERS
A. Fasteners: Hot-dip galvanized or stainless steel where exposed to weather, in ground contact, in contact with treated wood, or in area of high relative humidity.

1.8 WEATHER-RESISTANT SHEATHING PAPER
A. Building Wrap: ASTM E 1677, Type I air retarder; with flame-spread and smoke-developed indexes of less than 25 and 450, respectively, when tested according to ASTM E 84; UV stabilized.
B. Building-Wrap Tape: Pressure-sensitive plastic tape recommended for sealing joints and penetrations in building wrap.

1.9 SHEATHING JOINT-AND-PENETRATION TREATMENT MATERIALS
A. Sealant for Glass-Mat Gypsum Sheathing Board: Silicone emulsion sealant, compatible with sheathing tape and sheathing, and recommended for use with glass-fiber sheathing tape and for covering exposed fasteners.
B. Sheathing Tape for Glass-Mat Gypsum Sheathing Board: Self-adhering glass-fiber tape, for use with silicone emulsion sealant in sealing joints in glass-mat gypsum sheathing board.
C. Sheathing Tape for Foam-Plastic Sheathing: Pressure-sensitive plastic tape for sealing joints and penetrations in sheathing.

1.10 MISCELLANEOUS MATERIALS
A. Flexible Flashing: Composite, self-adhesive, flashing product consisting of a pliable, rubberized-asphalt compound, bonded to a high-density, cross-laminated polyethylene film to produce an overall thickness of not less than 0.025 inch.

<u>LEED SUGGESTIONS</u>
2.1 Emissions: Products shall meet the testing and product requirements of the California Department of Health Services' "Standard Practice for the Testing of Volatile Organic Emissions from Various Sources Using Small-Scale Environmental Chambers."

2.2 Vented Roof Assemblies: Proper ventilation is critical to the longevity and effectiveness of the roof assembly. While 2 inches is the recommended air space, for runs over 60 feet and complex roof designs, including hips, the Design Team should consult vented nailboard manufacturer and verify design using a "Vented Roof System Calculator" available from most manufacturers.

END OF SECTION

SECTION 062000

FINISH CARPENTRY

GENERAL GUIDELINES

1.1 SECTION INCLUDES

A. Qualitative requirements for wood construction that can be purchased ready made and installed by a finish carpenter, not requiring the specialized skills of architectural woodwork fabrication.

1.2 QUALITY ASSURANCE

A. Quality Standards: Architectural Woodwork Institute (AWI) "Quality Standards."
1. Custom grade.

1.3 INTERIOR MATERIALS

A. General: Provide materials that comply with requirements of the AWI Woodworking Standard for each type of woodwork and quality grade indicated and, where the following products are part of woodwork, with requirements of the referenced product standards, that apply to product characteristics indicated:
1. Hardboard: AHA A135.4
2. High Pressure Laminate: NEMA LD3.
3. Medium Density Fiberboard: ANSI A208.2, made with binder containing no urea-formaldehyde resin.
4. Particleboard: ANSI A208.1, Grade M-2, made with binder containing no urea-formaldehyde resin.
5. Straw-based particleboard: ANSI A208.1, Grade M-2, except for density.
6. Softwood Plywood: PS 1.
7. Hardwood Plywood and Face Veneers: HPVA HP-1, made with binder containing no urea-formaldehyde resin.

1.4 EXTERIOR MATERIALS

A. Exterior Standing and Running Trim and Rails
1. Dimensional lumber of rot resistance species.
a. Redwood, South American ipe, bald cypress, cedar, black locust, and black walnut.

1.5 STANDING AND RUNNING, TRIM AND RAILS FOR TRANSPARENT FINISH

A. Standing and running trim shall be custom grade hardwood, conforming to AWI Section 300.

1.6 FACTORY FINISHING OF INTERIOR WOODWORK

A. Quality standard complies with AWI Section 1500.

B. General: The prefinishing of interior architectural woodwork is required to be preformed at factory as specified in this section.

C. Transparent Finish: Comply with requirements indicated below for grade, finish system, staining, effect, and sheen.
   5. Grade: Custom
   6. AWI Finish System TR-6 - Catalyzed Polyurethane
   7. Staining: As determined by Designer.
   8. Effect: Open grain
   9. Sheen: As determined by Designer.

END OF SECTION

SECTION 064023
INTERIOR ARCHITECTURAL WOODWORK

GENERAL GUIDELINES

1.1 SECTION INCLUDES
- A. Qualitative requirements for shop-fabricated wood and laminate-clad fabrications.
  - 1. Section includes custom-fabricated cabinets and countertops.

1.2 QUALITY ASSURANCE
- A. Quality Standards: Architectural Woodwork Institute (AWI) "Quality Standards."
  - 1. Custom grade.

1.3 MATERIALS
- A. Wood Products
  - 1. Hardboard: AHA A135.4
  - 2. Medium Density Fiberboard: ANSI A208.2, made with binder containing no urea-formaldehyde resin.
  - 3. Particleboard: ANSI A208.1, Grade M-2-Exterior Glue.
  - 4. Straw-based Particleboard: ANSI A208.1, Grade M-2, except for density.
- B. Thermoset Decorative Panels
- C. High-Pressure Decorative Laminate: NEMA LD3, grades as required by woodwork quality standard.

1.4 HARDWARE
- A. Butt Hinges.
- B. Wire Pulls: Back-mounted, metal.
- C. Catches, Adjustable Shelf Standards and Supports, and Shelf Rests.
- D. Drawer Slides: Builders Hardware Manufacturers Association (BHMA): Minimum standards of BHMA A156.9.
  - 1. Heavy Duty (Grade 1 HD-100).
  - 2. Box Drawer Slides: Grade 1 HD-100.
  - 3. File Drawer Slides: Grade 1 HD-200.
  - 4. Pencil Drawer Slides: Grade 1.
  - 5. Keyboard Slides: Grade 1 HD-100.
- E. Locks: Door and drawer.
- F. Grommets, Casters, Leveling Guides, and Articulating Keyboard Assemblies.

1.5 FABRICATION
- A. Comply with requirements of AWI for Custom Grade, unless otherwise noted.

LEED SUGGESTIONS

2.1 Emissions: Products shall meet the testing and product requirements of the California Department of Health Services' "Standard Practice for the Testing of Volatile Organic Emissions from Various Sources Using Small-Scale Enviornmental Chambers."

END OF SECTION

THIS PAGE HAS BEEN INTENTIONALLY LEFT BLANK.

07 DIVISION

THERMAL AND MOISTURE PROTECTION

TABLE OF CONTENTS

DIVISION 07: THERMAL AND MOISTURE PROTECTION

071000	***Dampproofing and Waterproofing***
072100	***Thermal Insulation***
072700	***Air Barriers***
073113	***Asphalt Shingles***
074113	Metal Roof Panels
074213	Metal Plate Wall Panels
074216	Insulated-Core Metal Wall Panels
074219	Metal Wall Plate
074243	Composite Wall Panels
075000	***Membrane Roofing***
075113	Built-Up Asphalt Roofing
075200	Modified Bituminous Membrane Roofing
075323	***EPDM Roofing***
075400	Thermoplastic Membrane Roofing
075700	Coated Foamed Roofing
076200	Sheet Metal Flashing and Trim
077100	Roof Specialties
077200	Roof Accessories
078100	Applied Fireproofing
078400	Firestopping
079200	Joint Sealants

SECTION 071000

DAMPPROOFING AND WATERPROOFING

LESSONS LEARNED

3.1 While damp proofing and waterproofing qualitative requirements are not included in the Design Manual, ***their correct implementation is critical*** to a successful project.

3.2 ***Damp proofing is used on the exterior face of below grade walls to reduce migration of moisture into interior spaces. Waterproofing is resistive to migration of water into interior spaces through below grade walls where it is under hydrostatic pressure. Waterproofing is required on walls that retain earth and enclose interior spaces where groundwater is within 6 inches of the floor.***

3.3 The Design Team should review the Geotechnical report for recommendations on damp proofing and waterproofing. ***Good rainwater and storm run-off management and foundation drainage, and proper grading of soil or paving away from building walls and foundations is also critical.***

END OF SECTION

SECTION 072100

THERMAL INSULATION

GENERAL GUIDELINES

1.1 SECTION INCLUDES

A. Qualitative requirements for organic and inorganic insulation applied for thermal protection in walls, ceilings, attics, and crawl spaces; under concrete slabs on grade; and at perimeter of foundations.

1.2 PERFORMANCE REQUIREMENTS

A. Plenum Rating: Glass and slag-wool-fiber / rock-wool-fiber insulation rated for resistance against erosion and mold growth per UL 181.

B. NFPA: Foam plastics left exposed to the interior occupied space must be covered by a thermal barrier, show compliance to NFPA 286 for flame spread classifications for specific materials or assemblies, ***or qualify for an exemption under the Ohio Building Code.***

1.3 MATERIALS

A. Extruded Polystyrene Board Insulation
   1. Type IV, 25 p.s.i. minimum density.

B. Unfaced Mineral Fiber Blanket Insulation
   1. Mineral Fiber Type: Fibers manufactured from glass, slag wool, or rock wool.

C. Faced Mineral Fiber Blanket Insulation
   1. Mineral Fiber Type: Fibers manufactured from glass, slag wool, or rock wool.

D. Foil-Faced, Glass-Fiber Board Insulation: Nominal density of 6 lb/cu.ft.

E. Glass-Mat-Faced, Glass-Fiber Board Insulation: Nominal density of 6 lb/cu.ft.

F. Unfaced, Slag-Wool-Fiber / Rock-Wool- Fiber Board Insulation: Nominal density of 6 lb/cu.ft.

G. Foil Faced Closed Cell Rigid Foam Board Insulation.

H. Glass-Fiber Loose Fill.

I. Foamed-in-Place Insulation
   1. Silicate foam.
   2. Open-cell polyurethane: Water-based polyurethane, low-density, no VOC emissions after 30 days; foaming agent: carbon dioxide and water.

J. Closed-cell polyurethane Foam Insulation: ASTM C 1029, Type II, 1.5 lb.cu.ft.
   1. Foam insulation required between all windows and doors at head, jamb, and sill.
   .2 Foam interior junction of the roof to wall intersection, the underside of the roof deck at the ridge and valley(s) and at all roof penetrations (roof drains, conduit, roof hatch, etc.) per detail on Chapter 8: Systems and Materials – Exterior Walls, Exterior Wall/Roof Closure. ***Provide thermal barrier per building code.***
      a. Class A Foam that meets the requirements of NFPA 286 Room Corner Fire Test does not require a thermal barrier.

K. Auxiliary Insulating Materials
   1. Vapor-retarder tape
   2. Adhesive for bonding insulation
   3. Insulation fasteners
   4. Tape or foam for sealing joints in insulation board.

L. Self-Supported, Spray-Applied Cellulosic Insulation.

M. Vapor Retarders.

N. Spray-Polyurethane Foam Sealant: 1 or 2 component, 1.5 to 2.0 lb/cu.ft. density; flame

spread index of 25 or less according to ASTM E 162 or E 84.

1. Single-component sealant low expansion design for sealing perimeter of openings.
2. Two-component foam sealant for gaps over 2 inches.

LEED SUGGESTIONS

2.1 Qualifying for a credit under the LEED Rating System requires a reduction in design energy cost compared to the energy cost budget for regulated energy components described in the requirements in ASHRAE 90.1. Insulation plays a major role in determining the extent of design energy-cost reductions. To obtain the maximum number of points under the "Energy and Atmosphere – Optimize Energy Performance", an 'integrated design' approach with the Mechanical Engineer is important.

2.2 Product Data for Credit EQ 4: Indicate products meet the testing and product requirements of the California Department of Health Services Standard Practice for the Testing of Volatile Organic Emissions from Various Sources Using Small-Scale Environmental Chambers, including 2004 Addenda.

2.3 Sustainability Requirements: Provide glass-fiber insulation as follows:

A. Low Emitting: Insulation tested according to ASTM D 5116 and shown to emit less than 27-ppb formaldehyde.

2.4 Sustainability Requirements: Provide spray-applied cellulosic insulation as follows:

A. Low Emitting: Insulation tested according to ASTM D 5116 and shown to emit less than 27-ppb formaldehyde.

LESSONS LEARNED

3.1 Thermal Resistance and Thermal Resistivity

A. Thermal resistance (R-value) is a measure of resistance to heat flow of the "total thickness" of an insulating material or construction. Thermal resistivity (r-value) is a measure of resistance to heat flow of a "unit thickness" of a homogeneous insulating material. The performance of non-homogenous materials such as fibrous blanket insulation is always reported using total thermal resistance, not unit thermal resistivity. For insulation in board form, which is homogeneous, the performance is reported in unit thermal resistivity. Where thermal resistivity is used, the total thermal resistance can be calculated by multiplying the unit thermal resistivity by the actual thickness in inches, or in SI (metric) units, by fractions of a meter.

B. For thermal blanket insulation, the location and thermal resistance are properly shown on the Drawings rather than indicated in the Specifications. For thermal insulation in board form, the location and thickness are shown on the Drawings and the thermal resistivity is indicated in the Specifications.

C. Because the performance of acoustical blanket insulation is not related to heat flow, neither thermal resistance nor thermal resistivity is used, even though thermal and acoustical blanket insulation may be identical. The location and thickness of acoustical blanket is shown on the Drawings.

3.2 Placement and Anchorage

A. Difficult spaces to insulate include floor-to-window wall junctures and partition-to-exterior wall junctures. Gaps in insulation at such locations can be successfully insulated by using spray polyurethane foam insulation.

END OF SECTION

SECTION 072700

AIR BARRIERS

GENERAL GUIDELINES

1.1 SECTION INCLUDES

A. Qualitative requirements for air barrier system. The entire building envelope shall be designed and constructed with a continuous air barrier.

1. Provide transition taping and foam products for masonry mockup in early construction phase.

B. Building Airtightness Requirement: The basic airtightness requirements and processes for OSFC projects is the following:

1. Design and construct the building envelopes of ***all instructional facilities*** with a continuous air barrier to control air leakage into (or out of) the conditioned space. Clearly identify the boundary limits of the building air barriers and of the portion or portions of the building to be tested for building airtightness on the construction documents. Clearly identify all air barrier components of each envelope assembly on construction documents and detail the joints, interconnections and penetrations of the air barrier components.
2. Join and seal the air barrier materials of each assembly to the air barrier materials of adjacent assemblies, allowing for the relative movement of these assemblies and components. Clearly identify air barrier system continuity on the plan and section construction drawings.
3. There shall be a continuous thermal, moisture and air barrier system surrounding the interior of the building to the top of the footings. ***There shall be no direct contact or thermal bridge between the exterior and the interior of the building*** such that the thermal, moisture and air barrier becomes discontinuous. Provide details to seal all penetrations, including but not limited to electrical, plumbing and HVAC components; windows and doors; compatibility of materials with one another.
4. Support the air barrier so that it shall withstand the maximum positive and negative air pressures that will be placed on the building without displacement, or damage, and transfer the load to the structure. The air barrier assembly must be durable to last the anticipated service life of the envelope.
5. Provide a motorized damper in the closed position and connect it to the fire alarm system to open on call and fail in the open position for any fixed open louvers such as at elevator shafts. Dampers and controls shall close all ventilation or make-up air intakes and exhausts, atrium smoke exhausts and intakes, etc. where leakage can occur during inactive periods. Provide air-tight vestibules at building entrances with high traffic.
6. Compartmentalize spaces under negative pressures such as boiler rooms and provide make-up air for combustion.

C. Air Barrier Design: The air barrier shall be designed and noted in the following manner:
   1. All air barrier components of each building envelope assembly shall be clearly identified or otherwise noted on construction documents.
   2. The joints, interconnections, and penetrations of the air barrier components including lighting fixtures shall be detailed or otherwise noted.
   3. The continuous air barrier shall extend over all surfaces of the building envelope (at the lowest floor, exterior wall, and ceiling or roof).
   4. The continuous air barrier shall be designed to resist positive and negative pressures from wind, stack effect, and mechanical ventilation.

D. Air Barrier Installation: The following areas of the continuous air barrier in the building envelope shall be wrapped, sealed, caulked, gasketed, or taped in an approved manner to minimize air leakage:
   1. Installer shall be certified by the Air Barrier Association of American (ABAA) Quality Assurance Program.
   2. Joints around fenestration and door frames (both manufactured and site-built).
   3. Junctions between walls and floors, between walls at building corners, between walls and roofs or ceilings.
   4. Penetrations through the air barrier in building envelope roofs, walls, and floors.
   5. Building assemblies used as ducts or plenums.
   6. Joints, seams, connections between planes, and other changes in air barrier materials.
   7. All steel support members at openings in exterior walls shall be isolated from direct thermal transfer.
   8. Install an air barrier transition from window to air barrier.

E. Quality Control: Provide for site inspections by ABAA to verify conformance with manufacturer's instructions and ABAA's Quality Assurance Program. Inspections at 5, 50, and 95 percent completion with written report.

1.2 MATERIALS AND ASSEMBLIES

A. Continuous air barrier materials and assemblies for the opaque building envelope shall comply with one of the following requirements.
   1. Materials that have an air permeance not exceeding 0.004 cfm/ft^2 under a pressure differential of 0.3 in w.g. (1.57 psf) when tested in accordance with ASTM E 2178. The following materials meet the requirements of 5.4.3.1.3.a:
      a. Plywood – minimum 3/8 in.
      b. Oriented strand board – minimum 3/8 in.
      c. Extruded polystyrene insulation board – minimum 1/2 in.
      d. Foil-faced rigid foam insulation board – minimum 1/2 in.
      e. Exterior gypsum sheathing or interior gypsum board – min. 1/2 in.
      f. Cement board – minimum 1/2 in.
      g. Built up roofing membrane
      h. Modified bituminous roof membrane
      i. Fully adhered single-ply roof membrane
      j. A Portland cement/sand parge, stucco, or gypsum plaster – minimum 1/2 in. thick.
      k. Cast-in-place and precast concrete.
      l. Sheet metal.
      m. Closed cell 2lb/ft^3 nominal density spray polyurethane foam – minimum 1 in.

2. Assemblies of materials and components (sealants, tapes, etc.) that have an average air leakage not to exceed 0.04 cfm/ft^2 under a pressure differential of 0.3 in w.g. (1.57 psf) when tested in accordance with ASTM E 2357 ASTM E 1677, ASTM E 1680 or ASTM E283; the following assemblies meet the requirements of 5.4.3.1.3 b.
   a. Concrete masonry walls that are:
      1) Fully grouted, or
      2) Painted to fill the pores.

1.3 Pre-Installation conferences shall be used to establish standards of workmanship for installation and for coordination among contractors.

LESSONS LEARNED

2.1 Air barrier and vapor ***retarder*** are two distinct functions. Two functions may be provided by one material which has both characteristics or the functions may be satisfied by two separate materials occurring in different planes of the building envelope.

A. Air barriers serve a different role in a building envelope than vapor retarders. Air barriers restrict the movement of airborne moisture into building cavities. Vapor retarders control the diffusion of moisture vapor into and out of building envelopes. Many air barrier materials also function as vapor retarders; others are vapor permeable. The location within the wall of combined air barriers/vapor retarders and of separate vapor retarders and air barriers is governed by the difference between interior and exterior environmental conditions.

2.2 A vapor ***retarder, if used,*** should occur on the interior side of the thermal insulation.

2.3 An air barrier/ retarder can be provided and satisfactorily serve its purpose in a variety of locations in the plane of the wall and roof.

A. ***Improper location or coordination of air barriers and vapor retarders can prevent the escape of moisture from the wall; moisture-laden air condensing in walls and the roof can lead to mold growth, metal framing corrosion, building materials deterioration, and wet insulation losing its insulating characteristics.***

2.4 Air movement can carry exponentially more moisture into and through the building envelope than vapor diffusion alone, which can lead to mold and fungal growth, the corrosion and premature deterioration of building components, and the staining of interior and exterior facades.

2.5 The Department of Energy has concluded that up to 40% of the energy consumed to heat and cool a building can be attributed to air leakage into and out of buildings. The effort to conserve energy and minimize losses from the interior environments of buildings has resulted in the need for tighter building envelopes. To control air leakage through building envelopes, air barriers as an air-impermeable component within the wall or roof have been incorporated into some building codes.

2.6 Air barriers are a component of the building envelope that control the movement of air into (infiltration) and out of (exfiltration) building walls and roofs due to differences in wind pressure, stack pressure, and HVAC fan pressure.

A. Wind: Produces positive air pressure on the windward façade of a building and negative air pressures on the leeward and side facades and on the roof. The magnitude of negative wind forces has been widely documented for roofing applications where substantial uplift loads must be resisted by roof assembly.

B. Stack Effect: The effect of air rising or falling within a building due to temperature differences between air in the building and air outside the building. Stack effect in heating seasons in cold climates can cause air infiltration at the lower levels of a building and air exfiltration in the upper levels. The reverse occurs in warm climates with air conditioning cooling the inside air causing it to fall. Air infiltrates the upper levels of a building and exfiltrates in the lower levels. Stack effect forces can be significant and sustained for several months. The air barrier must be capable of resisting these forces.

C. Fan Pressure: HVAC system pressurization that maintains a building interior with a positive pressure. Air under pressure attempts to infiltrate through the building envelope. Positive HVAC pressurization is usually intended to reduce infiltration and pollutants and to counter stack effect air pressure.

2.7 The resultant air pressures about the entire building envelope will influence the HVAC design pressures as well as indicate the magnitude of forces that the air barrier will be required to sustain.

2.8 Air exfiltration from a heated or air-conditioned interior space through the building envelope increases energy consumption as the building's HVAC system produces more conditioned air than would be required in a building with a properly functioning air barrier.

2.9 Air infiltration into a heated or air-conditioned building also increases energy consumption as the building's HVAC system corrects the interior temperature and humidity to the desired levels.

A. Air barriers restrict the movement of moisture into building cavities. Moisture-laden air condensing in walls and the roof can lead to mold growth, metal framing corrosion, building materials deterioration, and wet insulation losing its insulating characteristics.

B. Air barriers serve a different role in a building envelope than vapor retarders, which control the diffusion of moisture vapor into and out of building envelopes. Many air barrier materials also function as vapor retarders; others are vapor permeable. The location within the wall of combined air barriers/vapor retarders and of separate vapor retarders and air barriers is governed by the difference between interior and exterior environmental conditions.

END OF SECTION

SECTION 073113

ASPHALT SHINGLES

GENERAL GUIDELINES

1.1 SECTION INCLUDES
- A. Qualitative requirements for roof shingles, underlayment, and fastening products and methods.

1.2 QUALITY ASSURANCE
- A. All products used must be approved by shingle manufacturer prior to use.
- B. Exterior Fire-Text Exposure: Class A; ASTM E108 or UL 790, for application and roof slopes indicated.

1.3 WARRANTY
- A. Special Warranty
  1. Material Warranty Period: 40 years from date of contract completion, prorated, with first 5 years nonprorated.
  2. Wind-Speed Warranty Period: Resist blow-off or damage caused by wind speeds up to 80 m.p.h. for a minimum 5 years from date of contract completion.

1.4 SHINGLES
- A. Laminated-Strip Asphalt Shingles: ASTM D3462, laminated, multi-ply overlay construction, glass-fiber reinforced, mineral-granule surfaced, and self-sealing.
- B. Hip roofs require special consideration.

1.5 ROOFING ACCESSORIES
- A. Felt Underlayment.
- B. Self-Adhering Sheet Underlayment.

1.6 METAL TRIM AND FLASHING
- A. Perimeter Edge Metal: Provide one of the following metal types and thickness:
  1. 26 gauge (0.019 inch thick), prefinished galvanized steel
  2. 0.032 inch thick, prefinished aluminum
- B. Penetration Flashings: Provide one of the following metal types and thickness:
  1. 26 gauge (0.019 inch thick), prefinished galvanized steel or stainless steel.
  2. 0.032 inch thick, prefinished aluminum.
  3. 16 ounce (0.022 inch thick), copper.
- C. Valley Construction (Open Valleys): Provide one of the following metal types and thickness:
  1. 26 gauge (0.019 inch thick), prefinished galvanized steel or stainless steel.
  2. 0.032 inch thick, prefinished aluminum.
  3. 16 ounce (0.022 inch thick), copper.
- D. Apron, Step, Cricket, or Backer Flashings: Provide one of the following:
  1. 26 gauge (0.019 inch thick), prefinished galvanized steel or stainless steel.
  2. 0.032 inch thick, prefinished aluminum.
  3. 16 ounce (0.022 inch thick), copper

1.7 INSTALLATION
- A. General: Comply with manufacturer's instructions and recommendations but not less than those recommended by ARMA's "Residential Asphalt Roofing Manual" or "The NRCA Steep Roofing Manual."
  1. Fasten asphalt shingles to roof sheathing with ***galvanized roofing*** nails.

LESSONS LEARNED

3.1 The emergence of structural insulated roofing panels and the use of rigid insulation laminated to wood-based sheathing panels as structural roof deck have highlighted ventilation needs. For maintaining warranties, asphalt shingle manufacturers require an unobstructed air space immediately below the roof-deck sheathing. To permit air movement under the roof-deck sheathing, a number of proprietary products have been developed that use battens as spacers and an added sheathing layer as the asphalt shingle substrate. This air space can be vented with continuous soffit or eave intake vents combined with continuous ridge exhaust vents.

A. Proper ventilation extends the life of shingled roofs by minimizing the temperature differential between the attic air and outside air. It keeps the roof system cool during the hot summer months, preventing premature deterioration and less shingle replacement.

B. Proper ventilation prevents ice damming caused when the heat from inside the building and the sun melts the snow at the ridge. This causes water to run to the eaves and refreeze and the repetition of this process causes ice dams.

C. Proper ventilation provides energy savings in the summertime by cooling the roof sheathing, preventing premature roof deterioration, premature roof replacement, and increased servicing of cooling units due to their excessive use. It prevents heat build-up in unvented systems which radiates downward and increased the demand on cooling systems.

D. Proper ventilation provides energy savings in the wintertime by preventing hot and cold air to interact and cause moisture from condensation that causes soaked insulation, corrosion, and water infiltration.

END OF SECTION

SECTION 074113

METAL ROOF PANELS

GENERAL GUIDELINES

1.1 SECTION INCLUDES

A. Qualitative requirements for vertical-rib, seamed-joint, standing-seam metal roof panels.

1.2 WARRANTY

A. Special Warranty on Panel Finishes: 20 years.

B. Special Weathertightness Warranty for Standing-Seam Metal Roof Panels: 20 years.

1.3 PRODUCTS

A. Standing-Seam Metal Roof Panels:
1. Profile: Vertical rib, seamed joint.
2. Material: Aluminum-zinc alloy-coated steel.
3. Exterior Finish: 2-coat fluoropolymer, 70 percent PDVF resin.

B. Accessories:
1. Vapor retarder, if required by Design Team.
2. Thermal insulation: Faced polyisocyanurate board or extruded-polystyrene board.
3. Self-adhering, high-temperature sheet underlayment (optional over entire roof).
4. Slip sheet.
5. Substrate boards.
6. Miscellaneous metal framing.
7. Flashing and trim.
8. Gutters.
9. Downspouts.
10. Roof curbs.
11. Snow guards: Seam-mounted, stop or bar types. Surface mounted is not acceptable.
12. Pipe flashing.
13. Soffit panels.

LEED SUGGESTIONS

2.1 Buildings seeking LEED accreditation can receive a point for Sustainable Sites – Heat Island Effect for steep-sloped roofs having a Solar Reflectance Index (SRI) of 29 or more.

END OF SECTION

SECTION 074213

METAL WALL PANELS

GENERAL GUIDELINES

1.1 SECTION INCLUDES

A. Qualitative requirements for factory-formed and field-assembled, exposed or concealed fastener, lap-seam metal wall panels.

1.2 MATERIALS

A. Thermal Insulation for Field-Assembled Metal Wall Panels: Extruded polystyrene board.

B. Substrate Board.

C. Miscellaneous Metal Framing.

D. Panel Material
1. Metallic-Coated Steel Sheet Prepainted with Coil Coating.
a. Zinc-Coated (galvanized) Steel Sheet.
b. Aluminum-Zinc Alloy-Coated Steel Sheet.

1.3 PRODUCTS

A. Exposed/Concealed-Fastener, Lap-Seam Metal Wall Panels
1. Profile: As selected by A/E.
2. Material: Zinc-coated (galvanized) steel or aluminum-zinc alloy-coated steel sheet. No aluminum.
3. Exterior Finish: 2-coat Fluoropolymer.

B. Accessories
1. Flashing and trim.
2. Metal soffit panels.

END OF SECTION

SECTION 074216

INSULATED-CORE METAL WALL PANELS

GENERAL GUIDELINES

1.1 SECTION INCLUDES

A. Qualitative requirements for foamed-insulation-core metal wall panels and laminated-insulation-core metal wall panels.

1.2 PANEL MATERIALS

A. Metallic-Coated Steel Sheet
1. Zinc-Coated (Galvanized) Steel Sheet.
2. Aluminum-Zinc Alloy-Coated Steel Sheet.

B. Aluminum Sheet.

1.3 PANEL CORES

A. Polyisocyanurate Insulation: Closed cell, modified polyisocyanurate foam using a non-CFC blowing agent, foamed-in-place or board type, with flame-spread index of 75 or less and smoke-developed index of 450.

1.4 FOAMED-INSULATION-CORE METAL WALL PANELS

A. Concealed-Fastener, Foamed-Insulation-Core Metal Wall Panels: Formed with tongue-and-groove panel edges; designed for sequential installation by interlocking panel edges and mechanically attaching panels to supports using concealed clips or fasteners.

1.5 LAMINATED-INSULATION-CORE METAL WALL PANELS

A. Shiplap-Edge, Laminated-Insulation-Core Metal Wall Panels: Formed with flush exterior panel facing and with shiplap edges; designed for sequential installation by mechanically attached panels to supports using concealed clips and fasteners; with factory-applied sealant or gaskets in side laps.

1.6 ACCESSORIES

A. Miscellaneous Metal Framing.

B. Flashing and Trim.

END OF SECTION

SECTION 074219

METAL PLATE WALL PANELS

GENERAL GUIDELINES

1.1 SECTION INCLUDES

A. Qualitative requirements for factory-formed and field-assembled metal plate wall panels.

1.2 PERFORMANCE REQUIREMENTS

A. Air Infiltration: ASTM E 283.

B. Water Penetration under Static Pressure: ASTM E 331.

C. Structural Performance: ASTM E 330.
1. Deflection Limits: 1/180.

1.3 WARRANTY

A. Materials and Workmanship: Two years.

B. Finishes: 20 years.

1.4 MATERIALS

A. Miscellaneous Metal Framing: Subgirts, base or sill angles or channels, hat-shaped rigid furring channels, and cold-rolled furring channels.

1.5 PRODUCTS

A. Metal Plate Wall Panels
1. Material: Aluminum or steel sheet.
2. Thickness: 0.120 inch minimum
3. Exterior Finish: 2-coat fluoropolymer (70% PVDF resin), clear anodized or color anodized.

1.6 INSTALLATION

A. Installation Method: Flange attachment, clip, subgirt and spline, track support, rail support, or rainscreen principle.

END OF SECTION

SECTION 074243

COMPOSITE WALL PANELS

GENERAL GUIDELINES

1.1 SECTION INCLUDES

A. Qualitative requirements for factory-formed, metal-faced composite wall panels with thin thermoplastic cores.

1.2 PERFORMANCE REQUIREMENTS

A. Air Infiltration: ASTM E 283.

B. Water Penetration under Static Pressure: ASTM E 331.

C. Structural Performance: ASTM E 330.

1.3 WARRANTY

A. Materials and Workmanship: Two years.

B. Finishes: 20 years.

1.3 MATERIALS

A. Miscellaneous Metal Framing: Subgirts, base or sill angles or channels, hat-shaped rigid furring channels, and cold-rolled furring channels.

1.4 PRODUCTS

A. Metal-Faced Composite Wall Panels:
1. Material: Aluminum faced.
2. Thickness: 0.157 inch (4mm) minimum.
3. Exterior Finish: 2-coat fluoropolymer (70% PVDF resin), 3-coat fluoropolymer, 4-coat fluoropolymer, mica fluoropolymer, metallic fluoropolymer, FEVE fluoropolymer, clear anodized, color anodized, mill, acrylic finish for maintaining an “aged” finish, acrylic finish for maintaining a “penny-bright” finish, or pre-patinated.

1.5 INSTALLATION

A. Installation Method: Clip, track support, subgirt and spline, or rainscreen principle.

END OF SECTION

SECTION 075000

MEMBRANE ROOFING

GENERAL GUIDELINES

1.1 SECTION INCLUDES

A. General qualitative requirements for roofing system applied to the structural substrate, over insulation, or protected with insulation (protected membrane) as appropriate to the particular assembly.

1. Built-up bituminous roofing
2. Elastomeric membrane roofing
3. Thermoplastic membrane roofing
4. Modified bituminous membrane roofing

1.2 SYSTEM DESCRIPTION

A. General: Provide installed roofing membrane and base flashings that remain watertight, do not permit the passage of water, and resist uplift pressure calculated according to ASCE 7, thermally induced movement, and exposure to weather without failure.

B. Design Requirements

1. All roofs shall be designed and built to ensure positive drainage.
   a. Positive Drainage: The drainage condition in which consideration has been made during design for all loading deflections of the deck, and additional roof slope has been provided to ensure drainage of the roof area within 48 hours of rainfall, during ambient drying conditions.
2. Roofs shall be "solar ready" in accordance with O.R.C. 3318.112.

1.3 QUALITY ASSURANCE

A. Exterior Fire Test Exposure: Class A, comply with ASTM E108.

1.4 SEQUENCING

A. Work shall begin only after opening and penetrations are in place and adjacent work required for complete tie-in are in place. This includes flashing in masonry walls with special attention given to roof to wall transitions.

1. Work shall not begin before the "Preinstallation Conference" and conditions exist necessary for a successful completion of roofing have occurred.
2. Work shall not begin without the presence of manufacturer's representative, A/E and Testing Laboratory, if required.

B. Arrange work sequence to avoid use of newly constructed roofing as a walking surface or for equipment movement and storage. Where such access is absolutely required, the Applicator shall provide all necessary protection and barriers to segregate the work area and to prevent damage to adjacent areas.

C. After work on roof is started, no traffic will be permitted on the roof other than necessary for the roofing application and inspection. Materials shall not be piled on the roof to the extent that design live loads are exceeded. Roofing materials shall not be transported over unfinished or finished roofing or existing roofs unless adequate protection is provided.

1.5 WARRANTY

A. Roofing Warranty: Minimum manufacturer's 20 year total system warranty.

1.6 BUILT-UP ASPHALT ROOFING
  A. Refer to Section 075113.
1.7 MODIFIED BITUMINOUS MEMBRANE ROOFING
  A. Refer to Section 075200.
1.8 EPDM ROOFING
  A. Refer to Section 075323.
1.9 THERMOPLASTIC MEMBRANE ROOFING
  A. Refer to Section 075400.
2.0 INSTALLATION
  A. Install roofing membrane systems according to roofing system manufacturer's written instructions and applicable recommendations of NRCA's "Quality Control Guidelines".

LEED SUGGESTIONS

2.1 Buildings seeking LEED accreditation can receive a point for Sustainable Sites – Heat Island Effect for low-sloped roofs having a Solar Reflectance Index (SRI) of 78 or greater.

2.2 Qualifying for a credit under the LEED Rating System requires a reduction in design energy cost compared to the energy cost budget for regulated energy components described in the requirements in ASHRAE 90.1. Insulation plays a major role in determining the extent of design energy-cost reductions. To obtain the maximum number of points under the Energy and Atmosphere – Optimize Energy Performance, an "integrated design" approach with the Mechanical Engineer is important.

LESSONS LEARNED

3.1 Roof System: The term "roof system" is defined by these documents as "a system of interacting roof components, generally consisting of a membrane or primary roof covering, roof insulation and flashings designed to waterproof and improve the building's thermal resistance."

3.2 Warranties: Two types of comprehensive materials-and-workmanship warranties are commonly offered. Known as no-dollar-limit warranties and total-system warranties, these warranties usually bind the roofing installer to the manufacturer to make repairs during the first two years of the warranty period; thereafter, the system manufacturer agrees to provide labor and materials to repair leaks.
  A. Total-system warranties are required by the Ohio School Design Manual to offer the Owner a single entity to resolve roofing leaks that are traceable to the roofing membrane and other roofing components. Therefore the specification prepared by the Design Team should provide provisions for a total-system approach.

3.3 Insulation: Joints between insulation boards need to avoid gaps. Insulation must be installed in a minimum of two layers with joints offset in each direction, which reduces thermal bridging and makes the roofing system more energy efficient.

3.4 Additional items to be considered for a successful roof (one without leaks) includes:
  A. Possible inspections by a Registered Roof Observer or Registered Roof Consultant from the Roofing Consultants Institute.
  B. Thermographic scans by Owner for finished systems at job completion. This maybe included as part of the Enhanced Building Commissioning work.
  C. Hold trades other than the roofing contractor accountable for work on finished roof.

END OF SECTION

SECTION 075113

BUILT-UP ASPHALT ROOFING

GENERAL GUIDELINES

1.1 SECTION INCLUDES
- A. Qualitative requirements for roofing systems composed of alternating layers of bituminous sheets and viscous bituminous coatings over an insulated deck.

1.2 SYSTEM DESCRIPTION
- A. Provide one of the following built-up roofing membrane systems for insulated substrates:
  - 1. BU-I-A-G (4)-A (Built-Up Roof Membrane Over Insulated Deck Using Asphalt with Glass Fiber Ply Sheets and Aggregate Surfacing)
  - 2. BU-I-L-G2(coated base) (4)-A (Built-Up Roof Membrane Over Insulated Deck Using, Cold Liquid-Applied Asphalt with Ply Sheets and Aggregate Surfacing)

1.3 MATERIALS
- A. Base Sheet: As recommended by manufacturer.
- B. Ply Felt: Asphalt impregnated, glass fiber felt, complying with ASTM D 2178, Type VI or 28 lb. coated based sheets as required by manufacturer to meet warranty requirements.

1.4 FLASHING MATERIALS
- A. Flashing Sheet
  - 1. Provide one of the following:
    - a. SBS modified asphalt sheet, mineral granule surfaced, ASTM 6162 (composite sheet) or ASTM 6164 (polyester).
    - b. APP modified asphalt sheet, mineral granule surfaced, ASTM 6223 (composite).

1.5 ASPHALT MATERIALS
- A. Roofing Asphalt: As recommended by built-up roofing membrane manufacturer.
- B. Cold Applied Adhesive.

1.6 AUXILIARY MEMBRANE MATERIALS
- A. Aggregate Surfacing.
- B. Substrate Board: If required by the Design Team or roof system manufacturer by project conditions.
- C. Vapor Retarder: If required by the Design Team by project conditions.
- D. Roof Coating: If required by the Design Team by project conditions.
- E. Walkways: Provide at roof access points and recommended by system manufacturer.

1.7 POLYISOCYANURATE BOARD INSULATION
- A. Insulation shall have a minimum compressive strength of 20 psi and be faced on both top and bottom.

B. Provide tapered insulation, preformed saddles, crickets, tapered edge strips, and other insulation shapes as required for "positive drainage".

1.8 INSULATION ACCESSORIES

A. General: Roof insulation accessories recommended by insulation manufacturer for intended use and compatible with membrane roofing.

B. Fasteners.

C. Cold Fluid-Applied Adhesive.

D. Wood Nailer Strips.

E. Cover Board
1. Perlite insulation board.
2. Cellulosic-fiber insulation board.

1.9 GENERAL INSTALLATION REQUIREMENTS

A. Install built-up roofing membrane system according to roofing system manufacturer's written instructions and applicable recommendations of ARMA/NRCA's "Quality Control Guidelines for the Application of Built-Up Roofing".
1. Install roofing system according to applicable specification plates of NRCA's "The NRCA Roofing and Waterproofing Manual".

LEED SUGGESTIONS

2.1 Credit EQ 4.1 relates to indoor air quality within the building and sets limits for the VOC content of adhesives and sealants that may emit this VOCs into the interior space of the building. Because many adhesives and sealants used in roofing are used beneath the roof membrane, the volatile materials in them cannot be vented to the exterior and end up in the occupied space. For this reason, the requirements of this credit apply to roofing sealants and adhesives unless they are used exclusively on the exterior side of the roof membrane.

LESSONS LEARNED

3.1 If permanent roofing membrane is installed before roof-top work by other contractors is completed, a common scenario, the roofing membrane can be damaged. Although obvious damage can be remedied, long-term problems may still develop that may not be covered by a warranty. Confining rooftop construction operations to specific areas and enforcing protection requirements will also offer a measure of protection to the permanent roofing membrane.

3.2 The cost of temporary roofing, installed for the Contractor's convenience or to minimize the risk of incurring a penalty for delaying the overall Project completion, is the Contractor's responsibility.

3.3 Temporary roofing SHALL NOT be permitted to be retained as part of a final roofing membrane. It is easily damaged during the construction period. Moisture may enter the temporary roofing membrane and the dangers associated with phased construction of a BUR system may also be introduced. Ply slippage may occur between the temporary roof surface and the succeeding plies of the BUR roofing system. Interrupted or phased construction of the BUR roofing system is not recommended by roofing system manufacturers or NRCA.

END OF SECTION

SECTION 075200

MODIFIED BITUMINOUS MEMBRANE ROOFING

GENERAL GUIDELINES

1.1 SECTION INCLUDES

A. Qualitative requirements for roofing systems formed with modified bituminous membranes over an insulated deck.
   1. Provide one of the following systems:
      a. MBA (1)-I-(T, M or L)-G(2)-M or A (Modified Bitumen APP Roofing Membrane Over Insulated Deck, Mopped or Set In Cold, Liquid-Applied Adhesive, with Glass Fiber Ply Sheet and Mineral or Aggregate Surfacing)
      b. MBS (1)-I-(T, M or L)-G(2)-M or A (Modified Bitumen SBS Roof Membrane Over Insulated Deck, Mopped or Set In Cold, Liquid-Applied Adhesive, with Glass Fiber Ply Sheet and Mineral or Aggregate Surfacing)

1.2 MATERIALS

A. Cap Sheet: Provide one of the following:
   1. SBS-Modified Bituminous Cap Sheet: SBS-modified asphalt sheet, smooth surfaced, dusted with fine parting agent on both sides or granular surfaced; suitable for application method specified; manufacturer's standard thickness and weight; for use and of reinforcing type as follows:
      a. Use: Roof membrane and base flashing.
      b. Reinforcing: Composite woven (ASTM 6162) and glass fiber mat.
   2. APP-Modified Bituminous Cap Sheet, Smooth Surfaced: Atactic polypropylene modified asphalt sheet, smooth surfaced; suitable for application method specified; manufacturer's standard thickness and weight; for use and of reinforcing type as follows:
      a. Use: Roof membrane and base flashing.
      b. Reinforcing: Composite woven (ASTM 6162) and glass fiber mat.

1.3 AUXILIARY MEMBRANE MATERIALS

A. Protective Surfacing
   1. Aggregate Surfacing.

   2. Roof Granules.

B. Roofing Asphalt: As recommended by modified bituminous membrane manufacturer.

C. Cold-Applied Adhesive.

D. Substrate Board: If required by Design Team or roof system manufacturer by project conditions.

E. Vapor Retarder: If required by Design Team or roof system manufacturer by project conditions.

F. Walkways: Provide at roof access points and recommended by system manufacturer.

1.4 BASE SHEET MATERIALS

A. Base Sheet: Unperforated, asphalt impregnated and coated, glass fiber sheet, dusted with fine mineral surfacing on both sides.

1.5 BASE-PLY FELTS

A. Base-Ply Felt: Asphalt coated, glass fiber felt, complying with ASTM D 2178, Type VI or 28 lb. coated base sheets as required by manufacturer to meet warranty requirements.

1.6 POLYISOCYANURATE BOARD INSULATION

A. Insulation shall have a minimum compressive strength of 20 psi and be faced on both top and bottom.

B. Provide tapered insulation, preformed saddles, crickets, tapered edge strips, and other insulation shapes as required for “positive drainage”.

1.7 INSULATION ACCESSORIES

A. General: Roof insulation accessories recommended by insulation manufacturer for intended use and compatible with membrane roofing.

B. Fasteners.

C. Cold Fluid-Applied Adhesive.

D. Wood Nailer Strips.

E. Cover Board
1. Perlite insulation board.
2. Cellulosic-fiber insulation board.

1.8 INSTALLATION

A. Install modified bituminous membrane roofing system according to roofing system manufacturer’s written instructions and applicable recommendations of NRCA/ARMA’s “Quality Control Recommendations for Polymer Modified Bitumen Roofing”.
1. Install roofing system according to applicable specification plates of NRCA’s “The NRCA Roofing and Waterproofing Manual”.

END OF SECTION

SECTION 075323

EPDM ROOFING

GENERAL GUIDELINES

1.1 SECTION INCLUDES

A. Qualitative requirements for roofing systems formed with nonvulcanized and vulcanized elastomeric membranes over an insulated deck.
   1. Fully-Adhered Thermoset Membrane Roofing.

1.2 EPDM SHEET

A. Uniform, flexible sheet formed from a terpolymer of ethylene-propylene-diene (EPDM), complying with ASTM D 4637, of the following grade, class, thickness, backing, and exposed face color:
   1. Thickness: 60 mils, nominal.
      a. Type II, scrim or fabric internal reinforced.
      b. Backing: Unbacked.
      c. Black
   2. Thickness: 60 mils, nominal.
      a. Type I, non-reinforced
      b. Backing: Unbacked.
      c. White on black.

B. Sheet Flashing: 60 mil thick EPDM.

1.3 AUXILIARY MATERIALS

A. General: Furnish auxiliary materials recommended by roofing system manufacturer for intended use and compatible with EPDM membrane roofing.

B. Protection Sheet: Epichlorohydrin or neoprene non-reinforced flexible sheet.

C. Seaming Material: Manufacturer's standard splice tape.

D. Slip Sheet: Manufacturer's recommended slip sheet, of type required for application.

E. Fasteners, lap sealant, bonding adhesive, and water cutoff mastic.

F. Miscellaneous Accessories: Provide pourable sealers, preformed cone and vent sheet flashings, preformed inside and outside corner sheet flashings, T-joint covers, termination reglets, cover strips, and other accessories.

1.4 SUBSTRATE BOARDS

A. Substrate Board
   1. Glass-mat, water-resistant gypsum substrate.
   2. Gypsum wood fiber composite/fiber-reinforced gypsum.
   3. Perlite board.

1.5 ROOF INSULATION

A. General: Provide one of the following preformed roof insulation boards that comply with roofing system requirements and referenced standards:

1. Extruded-Polystyrene Board Insulation: ASTM C 578, Type IV, 1.6 lb./cu.ft. minimum density, square edged.
2. Polyisocyanurate Board Insulation: 20 psi compressive strength, minimum, and faced on both top and bottom.

B. Provide tapered insulation, preformed saddles, crickets, tapered edge strips, and other insulation shapes as required for “positive drainage”.

1.6 INSULATION ACCESSORIES

A. General: Roof insulation accessories recommended by insulation manufacturer for intended use and compatible with membrane roofing.
B. Fasteners.
C. Cold Fluid-Applied Adhesive.
D. Cover Board – must be included in the assembly.

1.7 MEMBRANE INSTALLATION

A. Membrane must be fully adhered.

LESSONS LEARNED

3.1 Substrate Boards may be used as thermal barriers, as support for vapor ***retarders***, and as part of a fire-resistance-rated roofing system. Substrate boards used as part of a fire-resistance rated roofing system can reduce the amount spray-on fireproofing needed. Value engineering a substrate board out of a rated roof assembly may in turn add cost to the project. ***Careful choice of roofing insulation can eliminate the need for a thermal barrier.***

3.2 Cover Boards

A. Elastomeric roofing systems using molded- or extruded-polystyrene insulation or polyisocyanurate insulation may also benefit from cover boards. NRCA has identified conditions where a cover board might be considered for ballasted, fully-adhered, and mechanically-fastened roofing systems.

B. Cover boards are beneficial if the compressive strength of the foam insulation is less than 23 lb/sq.ft. (158 kPa). Foam insulation in roofing systems that will be ballasted or subject to foot traffic may crush, reducing the thermal-insulation value. Extruded-polystyrene insulation in a fully-adhered membrane roofing may be attacked by solvent-based adhesives. Polyisocyanurate felt facers may separate from the foam if subject to long-term roof traffic. Creep under pressure from fastener plates or bars, causing a reduction in clamping pressure, has been reported with molded polystyrene in mechanically-fastened roofing systems. The damage from these situations can be minimized with the use of cover boards.

END OF SECTION

SECTION 075400

THERMOPLASTIC MEMBRANE ROOFING

GENERAL GUIDELINES

1.1 SECTION INCLUDES

A. Qualitative requirements for roofing systems formed with reinforced and unreinforced thermoplastic membranes over an insulated deck.
   1. Provide any of the following products:
      a. Thermoplastic Polyolefin Sheet (TPO)
      b. Polyvinyl-Chloride Sheet (PVC)
      c. Ketone Ethylene Ester Sheet (KEE)

1.2 THERMOPLASTIC POLYOLEFIN SHEET (TPO)

A. Reinforced Thermoplastic Polyolefin Sheet: ASTM D 6878***-11a***, reinforced, ***fabric backing is optional.***
   1. Thickness: 60 mils, minimum.

1.3 Polyvinyl-Chloride SHEET (PVC)

A. PVC Sheet: ASTM D4434, Type III, fabric reinforced, ***fabric backing is optional.***
   1. Thickness: 60 mils, minimum.

1.4 KETONE ETHYLENE ESTER SHEET (KEE)
   A. Ketone Ethylene Based Sheet Roofing (KEE): ASTM D6754, reinforced internally with a fabric, ***fabric backing is optional.***
      1. Thickness: 45 mils, minimum.

1.5 AUXILIARY MATERIALS

A. General: Finish auxiliary materials recommended by roofing system manufacturer for intended use and compatible with membrane roofing material.

B. Sheet Flashing: As recommended by membrane manufacturer.

C. Slip Sheet.

D. Vapor Retarder: If required for assembly as determined by Design Team.

E. Fasteners.

F. Walkways.

G. Miscellaneous Accessories: Provide pourable sealers, preformed cone and vent sheet flashings, preformed inside and outside corner sheet flashings, T-joint covers, termination reglets, cover strips, and other accessories.

1.6 SUBSTRATE BOARDS

A. Substrate Board, provide one of the following:
   1. Glass-mat, water-resistant gypsum substrate.
   2. Gypsum wood fiber composite/fiber-reinforced gypsum.
   3. Perlite board.

1.7 ROOF INSULATION

A. General: Provide one of the following preformed roof insulation boards that comply with roofing system requirements and referenced standards.
   1. Extruded-Polystyrene Board Insulation: ASTM C 578, Type IV, 1.6 lb./cu.ft. minimum density, square edged.
   2. Polyisocyanurate Board Insulation: ASTM C 1289, Type II, Grade 2, felt or glass-fiber met facer on both major surfaces.

B. Provide tapered insulation, preformed saddles, crickets, tapered edge strips, and other insulation shapes as required for “positive drainage”.

1.8 INSULATION ACCESSORIES

A. General: Roof insulation accessories recommended by insulation manufacturer for intended use and compatible with membrane roofing.

B. Fasteners.

C. Cold Fluid-Applied Adhesive.

D. Cover Board – must be included in the assembly.

1.9 INSTALLATION

A. Membrane shall be adhered.

END OF SECTION

SECTION 075700

COATED FOAMED ROOFING

GENERAL GUIDELINES

1.1 SECTION INCLUDES

A. Qualitative requirements for low-slope roofing assemblies consisting of spray-applied materials which expand through chemical reaction and an elastomeric coating.

1.2 PERFORMANCE REQUIREMENTS

A. Uplift pressure calculated according to SEI / ASCE 7.

1.3 QUALITY ASSURANCE

A. Installer Qualifications: SPFA accreditation for company.

B. Fire-Test-Response Characteristics
   1. Surface-Burning Characteristics: Maximum flame-spread and smoke-developed indexes of 75 and 450, respectively.
   2. Exterior Fire-Test Exposure: Class A.

1.4 WARRANTY

A. Coated Formed Roofing Manufacturer's Warranty: 20 years.

1.5 MATERIALS

A. Polyurethane Foam: ASTM C 1029, Type III; with in-place density of 2.8 to 3.0 lb/cu.ft. and flame-spread index of 75 or less.

B. Silicone Coatings: One- or two-component silicone.

C. Thermal Barrier: If required for roof assembly as determined by Design Team.

D. Vapor Retarder: As recommended by coated foamed roofing manufacturer and Design Team.

E. Mineral Granules: Ceramic-coated roofing granules.

F. Walkway Pads: Formed of nonwoven PVC strands.

1.6 INSTALLATION

A. Install thermal barrier to resist uplift pressures according to roofing system manufacturer's written instructions.

B. Apply base coat and topcoat at thickness recommended by coated foamed roofing manufacturer.

C. Apply mineral granules over coated polyurethane foam.

END OF SECTION

SECTION 076200

SHEET METAL FLASHING AND TRIM

GENERAL GUIDELINES

1.1 SECTION INCLUDES

A. Qualitative requirements for shop- and field-formed accessories trim.

1.2 QUALITY ASSURANCE

A. Quality Standard: SMACNA's "Architectural Sheet Metal Manual".

1.3 WARRANTY

A. Fluoropolymer Finishes: 10 years.

1.4 MATERIALS

A. Sheet Metals, Exposed
1. Copper sheet
2. Aluminum sheet with smooth, flat or embossed surface.
a. Class I clear anodic finish.
b. Class I color anodic finish.
c. Coil-Coated Finish: two-coat fluoropolymer.
3. Stainless-Steel Sheet: Polished directional satin finish with smooth, flat surface.
4. Metallic-Coated Steel Sheet: Zinc-coated (galvanized) steel or Aluminum-zinc alloy-coated steel sheet with smooth, flat or embossed surface.
a. Coil-Coated Finish: Two-coat fluoropolymer.

B. Underlayment

1.5 PRODUCTS

A. Formed Flashing and Trim
1. Reglets and Counterflashing: Stainless steel or galvanized steel.
a. Type: Stucco, concrete, or masonry.
1) Surface-mounted type should be avoided.
b. Materials
1) Copper: 16 ounce.
2) Stainless Steel: 0.0187 inch thick.
3) Prepainted, Metallic-Coated Steel: 0.028 inch thick.

B. Formed Roof Drainage Fabrications: Including hanging gutters, downspouts, parapet scuppers, conductor heads, and splash pans.
1. Gutters
a. Girth up to 15 inches
1) Aluminum: 0.032 inch thick.
2) Prepainted, metallic-coated steel: 0.0217 inch thick.
b. Girth 16 to 20 inches
1) Aluminum: 0.040 inch thick.
2) Prepainted, metallic-coated steel: 0.0276 inch thick.

c. Girth 21 to 25 inches
1) Aluminum: 0.050 inch thick.
2) Prepainted, metallic-coated steel: 0.0336 inch thick.
d. Girth 26 to 30 inches
1) Aluminum: 0.063 inch thick.
2) Prepainted, metallic-coated steel: 0.040 inch thick.
e. Girth 31 to 35 inches
1) Prepainted, metallic-coated steel: 0.0516 inch thick.
2. Downspouts
a. Aluminum: 0.024 inch thick.
b. Prepainted, metallic-coated steel: 0.0217 inch thick.
3. Parapet Scupper
a. Copper: 15 oz./sq.ft.
b. Aluminum: 0.032 inch thick.
c. Prepainted, metallic-coated steel: 0.0276 inch thick.
4. Conductor Heads
a. Aluminum: 0.032 inch thick.
b. Prepainted, metallic-coated steel: 0.0276 inch thick.
5. Splash Pans
a. Aluminum: 0.040 inch thick.
b. Stainless steel: 0.0187 inch thick.

C. Formed Low-Slope Roof Fabrications: Including roof-penetration flashing and roof-drain flashing.
1. Roof-Penetration Flashing
a. Stainless steel: 0.0187 inch thick.
b. Prepainted, metallic-coated steel: 0.0276 inch thick.
2. Roof Drain Flashing
a. Stainless steel: 0.0187 inch thick.
3. Refer to Section “Roof Specialties” for roof edge flashing and copings.

D. Miscellaneous Formed Fabrications: Including equipment support flashing and overhead-piping safety pans.
1. Equipment Support Flashing
a. Stainless steel: 0.0187 inch thick.
b. Prepainted, metallic-coated steel: 0.0276 inch thick.
2. Overhead-Piping Safety Pans
a. Stainless steel: 0.0250 inch thick.
b. Prepainted, metallic-coated steel: 0.0276 inch thick.

LESSONS LEARNED

3.1 Metal Considerations

A. Compatibility of sheet metal flashing and trim with other materials on the building must be considered. Sustained wash from certain materials onto sheet metal flashing and trim may cause deterioration of metals or finishes. Contact manufacturers to verify whether metals and coatings under consideration are compatible with runoff from adjoining stonework, concrete, or masonry.

B. Metal-to-metal compatibility should also be considered. Avoid contact between metals that are farthest apart in the galvanic scale. See Appendix C in SMACNA's Architectural Sheet Metal Manual for more recommendations for reducing galvanic corrosion.

C. Galvanic corrosion results when two metals are in contact with each other in the presence of an electrolyte such as rainwater or sea water. The less noble, or more anodic, metal will corrode. A galvanic scale, or galvanic series, arranges metals according to their relative electrolytic behavior in a specific electrolyte, which is why the exact order of metals may differ in different galvanic scales. The greater the separation on the scale, the greater the corrosion potential.

3.2 Sheet Metal Thickness and Gages – The sheet metal flashing and trim industry continues to use the term gage to indicate sheet metal thickness for steel and stainless steel, although, according to ASTM standards, sheets metals are only produced in decimal or fractional thicknesses. ASTM A 480/A 480M, Specification for General Requirements for Flat-Rolled Stainless and Heat-Resisting Steel Plate, Sheet, and Strip, includes the following statement in Section 4, "Ordering Information": "Thickness shall be ordered to decimal or fractional thickness. The use of the gage number is discouraged as being an archaic term of limited usefulness not having a general agreement on meaning." It would be difficult to compare metal thicknesses among manufacturers if the use of gages were retained.

3.3 Wind-Uplift Resistance – Wind-uplift resistance and how sheet metal roof edge flashing and copings are attached at the roof perimeter are issues that have grown in prominence. Perimeter flashing failures are frequently cited as initiating roofing membrane failures during windstorms. FM Global (FMG) reports: "The majority of (low-slope) roof covering failures involve improperly designed or constructed perimeter flashings."

END OF SECTION

SECTION 077100

ROOF SPECIALTIES

GENERAL GUIDELINES

1.1 SECTION INCLUDES

A. Qualitative requirements for standard manufactured components, both formed and extruded, serving as roofing perimeter facing, drainage, and expansion control.

1.2 PERFORMANCE REQUIREMENTS

A. Low-slope membrane roof systems metal edge securement, except gutters, shall be designed in accordance with ANSI/SPRI ES-1, except wind speed shall be determined by ASCE 7.

1.3 WARRANTY

A. Painted Finishes: 10 years.

1.4 COPINGS

A. Copings: Manufactured coping system consisting of formed-metal coping cap, concealed anchorage, concealed splice plates with same finish as coping caps, mitered corner units, and end caps.
   1. Coping Caps: Fabricated from one of the following exposed metals.
      a. Aluminum: 0.063 inch thick, minimum
      b. Prepainted, Metallic-Coated Steel Sheet: 0.034 inch thick, minimum.
   2. Corners: Continuously welded or mechanically clinched and sealed watertight.

1.5 ROOF EDGE FLASHINGS

A. Provide one of the following types compatible with roofing system selected, performance and wind-load requirements.
   1. Canted Roof Edge Fascia: Manufactured, two-piece, roof edge fascia consisting of snap-on or compression-clamped metal fascia cover and a continuous formed galvanized steel sheet cant dam, 0.028 inch thick, minimum, with integral drip edge cleat.
      a. Fascia Cover: Fabricated from one of the following metals:
         1) Formed or extruded aluminum or painted, metallic-coated steel sheet in thickness as recommended by NRCA in “Guide for Sheet Metal Fascia Edges”.
   2. Roof Edge Fascia: Manufactured, two-piece, roof edge fascia consisting of snap-on metal fascia cover and a continuous formed- or extruded-aluminum anchor bar with integral drip edge cleat to engage fascia cover.
      a. Fascia Cover: Fabricated from one of the following metals:
         1) Formed or extruded aluminum or painted, metallic-coated steel sheet in thickness as recommended by NRCA in “Guide for Sheet Metal Fascia Edges”.

3. Gravel Stops: Manufactured, one-piece, formed-metal gravel stop with a horizontal flange and vertical leg fascia terminating in a drip edge, continuous hold-down cleat, and concealed splice plates of same material, finish, and shape as gravel stop.
   a. Fabricate from one of the following metals:
      1) Aluminum sheet or painted, metallic-coated steel sheet in thickness as recommended by NRCA in “Guide for Sheet Metal Fascia Edges”.

1.6 GUTTERS AND DOWNSPOUTS

A. Gutters and Downspouts: Manufacture or fabricate gutter complete with end pieces, outlet tubes, and other accessories as required. Furnish flat-stock gutter spacers and gutter brackets from same material as gutters, of size recommended by SMACNA, but not less than twice the gutter thickness. Fabricate expansion joints, expansion-joint covers, and gutter accessories from same metal as gutters.
   1. Fabricate from one of the following metals:
      a. Aluminum sheet or painted, metallic-coated steel sheet in thickness as recommended in the Architectural Sheet Metal Manual, Table 1-5 “Recommended Minimum Gages for Gutter.”

1.7 REGLETS AND COUNTER FLASHINGS

A. General: Provide reglets of type, material, and profile indicated, compatible with flashing. Form to securely interlock with counterflashing.

B. Counterflashing Wind Resistant Clips: Provide clips to be installed before counterflashing to prevent wind uplift of the counterflashing’s lower edge.

C. Material: Fabricate reglets from the following metal in thickness indicated:
   1. Aluminum Sheet: 0.050 inch thick, minimum.
   2. Painted, metallic-coated steel sheet: 0.028 inch, minimum

D. Provide counterflashing fabricated from the same metal as reglets and compatible with reglet system installed.

E. Provide counterflashing fabricated from the following metal in thickness indicated:
   1. Aluminum Sheet: 0.024 inch thick.
   2. Painted, metallic-coated steel sheet:: 0.028 inch.

(continued on next page)

Guide for Sheet Metal Fascia Edges

(Reprinted from the NRCA Roofing and Waterproofing Manual – Fourth Edition)

Recommended Minimum Gauges for Fascia and Cleat[2]					
Exposed Face Without Brakes "A" Dimension	**Aluminum Alloy (30003-H14)**	**Cold Rolled Copper**	**Galvanized or Coated Steel (G60 & G90)**	**Stainless Steel (302 & 304)**	**Cleat[2]**
Up to 3" Face	.032"	16 oz.	24 ga.	24 ga.	Same gauge as fascia metal
3" to 6" Face	.040"	16 oz.	24 ga.	24 ga.	One gauge heavier than fascia metal
6" to 8" Face	.050"	20 oz.	24 ga.	24 ga.	One gauge heavier than fascia metal
8" to 15" Face	Add brakes to stiffen or use two-piece face	Add brakes to stiffen or use two-piece face	Add brakes to stiffen or use two-piece face	Add brakes to stiffen or use two-piece face	One gauge heavier than fascia metal

Reprinted from SMACNA "Architectural Sheet Metal Manual"

Girth		**Galvanized Steel**		**Copper**		**Aluminum**		**Stainless Steel**	
in.	**mm**	**gage**	**mm**	**oz.**	**mm**	**in.**	**mm**	**gage**	**mm**
Up to 15	Up to 380	26	0.5512	16	0.55	0.032	0.812	28	0.396
16-20	410-510	24	0.7010	16	0.55	0.040	1.016	26	0.477
21-25	530-640	22	0.8534	20	0.69	0.051	1.295	24	0.635
26-30	660-760	20	1.006	24	0.82	0.063	1.295	22	0.795
31-35	790-890	18	1.311	24	0.82			20	0.952
Over 35	Over 890	16	1.613					18	1.270

Table 1-5 Recommended Minimum Gages for Gutter

END OF SECTION

SECTION 077200

ROOF ACCESSORIES

GENERAL GUIDELINES

1.1 SECTION INCLUDES

A. Qualitative requirements for accessories installed on or in roofing other than mechanical or structural items.

1.2 QUALITY ASSURANCE

A. Sheet Metal Standard: SMACNA's "Architectural Sheet Metal Manual".

1.3 PRODUCTS

A. Roof Curbs: Galvanized steel, aluminum-zinc alloy-coated steel, prepainted metallic-coated steel, aluminum, or stainless steel.

B. Equipment Supports: Galvanized steel, aluminum-zinc alloy-coated steel, prepainted metallic-coated steel, aluminum, or stainless steel.

C. Roof Hatches: Galvanized steel, aluminum-zinc alloy-coated steel, prepainted metallic-coated steel, aluminum, or stainless steel.

D. Gravity Ventilators: Galvanized steel or aluminum.

E. Ridge Vents: Galvanized steel or aluminum.

LESSONS LEARNED

3.1 Special attention to insulating curbs and ensuring that seams and joints of roof accessories are sealed to prevent air or water infiltration can have a significant effect on the energy efficiency of roof accessories.

END OF SECTION

SECTION 078100

APPLIED FIREPROOFING

GENERAL GUIDELINES

1.1 SECTION INCLUDES

A. Qualitative requirements for specialized coatings, mineral fiber, and cementitious coverings to provide the resistance to building components.

1.2 QUALITY ASSURANCE

A. Fire-Test-Response Characteristics: Provide SFRM with the fire-test-response characteristics as determined by testing identical products per test method indicated by UL or another testing and inspecting agency acceptable to authorities having jurisdiction.

B. Product shall contain no detectable asbestos.

1.3 MATERIALS

A. Concealed SFRM: Cementitious or sprayed-fiber.

B. Exposed SFRM
1. Cementitious Type: Dry density not less than 22 lb/cu.ft.
2. Sprayed-Fiber Type: Dry density not less than 22 lb/cu.ft.
3. Water-based intumescent mastic.
4. Non-water-based intumescent mastic.

C. Auxiliary Fire-Resistive Materials:
1. Substrate primers.
2. Bonding adhesive.
3. Expanded metal lath.
4. Reinforcing fabric.
5. Reinforcing mesh.
6. Sealer.
7. Topcoat.

LESSONS LEARNED:

2.1 If primers and lockdown encapsulants are neither listed nor prohibited in the specified fire-resistance design, UL allows the application of SFRM over unknown, primed, and similarly painted wide-flange steel shapes under certain conditions but only after bond tests are performed to compare the bond strength of the SFRM that has been applied over coated steel to that applied over uncoated steel. UL's Fire Resistance Directory, "Coating Materials" Article, which is applicable to wide-flange steel shapes, specifies the bond tests and the conditions where mechanically attaching the SFRM is required. These conditions include wide-flange-beam flange widths exceeding 12 inches, column-flange widths exceeding 16 inches, beam and column web depths exceeding 16 inches, and bond strengths over primed steel falling below the minimum acceptable values. Typically, SFRMs for direct application are tested on galvanized steel deck with a phosphate coating. If other coatings are present, mechanical attachment may be required unless the deck and coating have been UL tested and listed as a painted deck for a specific UL design. Verify, with manufacturers, the chemical compatibility of primers or encapsulants with the SFRM.

2.2 Careful consideration of fire-protection requirements by the entire design team early in the design process can result in integrated designs that may avoid common complaints about and problems with costs, value engineering, substitutions, workmanship, durability, indoor air quality, and failures related to applications of SFRM.

2.3 Several methods, both active (sprinklers) and passive, are possible for protecting steel structures from fire. Designing for fire protection might include dividing a building into isolated modules with a limited number of penetrations for fire-rated doorways, electrical conduits, and ducts. Modules could be protected with SFRM, sprinklers, or both, depending on use, occupancy, potential exposure to abusive environments and individuals, and requirements of authorities having jurisdiction. Costs of sprinkling may be offset by savings from less-restrictive requirements for construction and finishes. Avoiding fire-rated doorways reduces costs for doors, hardware, and signs. Avoiding penetrations for electrical and mechanical work reduces the need for and expense of through-penetration firestop systems, fire-safing insulation, and fire dampers.

2.4 The design of other construction may be dictated by the selection of specific fire-resistance designs in ways that are sometimes unanticipated. For example, selecting assemblies for floor-ceiling designs that are allowed, with restrictions, for roof-ceiling designs, may limit the choice of roofing materials and thickness of the roof insulation.

2.5 Certain surfaces, such as the underside of metal floors and roof decks, may undergo continuous changes in loading or vibration from heavy traffic that could damage SFRM. Excessive deflection and impact forces on steel deck from construction activities and traffic have been identified by manufacturers of SFRM as the leading causes of lack of cohesion/adhesion and bond failure when SFRMs are applied to steel deck. Problems with roof decks surpass problems with floor decks because floor decks are often concrete filled, usually stiffer than roof decks, and less susceptible to impact loads. Manufacturers of SFRM recommend that roofing be completed, penthouse construction be completed, HVAC roof equipment be placed, and construction roof traffic be stopped before applying SFRM. ASTM E 1513 “Practice for Application of Sprayed Fire-Resistive Materials” (SFRMs) states that “SFRM shall be applied after all roof construction, installation of roof-top HVAC equipment, and other related work is completed” and “No SFRM shall be applied to steel deck prior to completion of concrete work on steel deck.” AWCI’s Recommended Sprayed Fireproofing Industry Standards suggests prohibiting traffic on completed roofing until SFRMs are completely dry and cured. ASTM E 1513 requires that “No roof traffic shall be allowed during application or during the curing period of the SFRM applied to the roof.” Excessive construction loads on roof decks can dent and distort the decks and cause damage to applied SFRM. Refer to manufacturers’ written recommendations for other guidelines that might influence the choice of above-deck roofing components.

END OF SECTION

SECTION 078400

FIRESTOPPING

GENERAL GUIDELINES

1.1 SECTION INCLUDES

A. Qualitative requirements for materials installed in cavities, around penetrations, and openings in floors, walls, partitions, and other building components to prevent spread of fire and smoke.

1.2 QUALITY ASSURANCE

A. Installer Qualifications: An FM Global-approved firestop contractor or a UL-qualified firestop contractor.

B. Fire-Test-Response Characteristics: UL, Intertek ETL SEMKO, or FM Global.

1.3 PENETRATION FIRESTOPPING

A. Penetrations in Fire-Resistance-Rated Walls: F-ratings per ASTM E 814 or UL 1479.

B. Penetrations in Horizontal Assemblies: F- and T-ratings per ASTM E 814 or UL 1479.

C. Penetrations in Smoke Barriers: L-ratings per UL 1479.

D. W-Ratings: Per UL 1479.

1.4 FIRE-RESISTIVE JOINT SYSTEMS

A. Joints in or between Fire-Resistance-Rated Construction: ASTM E 1966 or UL 2079.

B. Joints at Exterior Curtain-Wall / Floor Intersections: ASTM E 119 or ASTM E 2307.

END OF SECTION

SECTION 079200

JOINT SEALANTS

GENERAL GUIDELINES

1.1 Sealants are required for masonry mockup in early construction phase.

LEED SUGGESTIONS

2.1 LEED Rating: The U.S. Green Building Council's Green Building Rating System for Leed for Schools requires low-emitting materials within the weatherproofing system for Credit EQ 4.1. VOC limits are those listed for Bay Area Air Quality Management District Regulation 8, Rule 51. Although most elastomeric sealants fall easily within VOC limits, special attention should be paid to solvent-release sealants such as acrylic-based and butyl-rubber based products. Primers must also be considered because they typically have a higher VOC rating than the sealants themselves. Exterior sealants are not covered in LEED Credit EQ 4.1.

LESSONS LEARNED

3.1 While joint sealant qualitative requirements are beyond the scope of the Design Manual, they are none the less very important. Joint sealants provide continuity and weathertightness across small gaps in construction and at junctures between dissimilar materials.

A. Exterior Exposure: For exterior applications sealants must resist the effects of exposure to ultraviolet (UV) light, ozone, heat, water, temperature extremes, air pollution, and cleaning chemicals.
   1. Silicone joint sealants are generally regarded as having the highest performance and best durability of the elastomeric joint sealants for exterior use.

B. Interior Applications: For interior applications, sealants must resist the effects of exposure to mildew, paint, cleaning agents, and for special applications - certain chemicals.
   1. Silicone, urethane, or latex sealants may be used for interior applications based on application.
      a. Silicones are recommended for mildew resistance and where contact with food is possible.
      b. Urethanes are good general purpose sealants.
      c. Latex sealants are paintable and good for filling gaps where little movement is expected.

C. Traffic Applications: If exposed to foot and vehicular traffic, sealants must resist the abrasion, tearing, puncturing, and other forms of damage caused by sharp objects such as spike heels, pebbles, and debris.
   1. Urethanes are generally chosen for traffic joints because of their greater hardness and better tear resistance.

3.2 Evaluating joint-sealant performance requires understanding not only sealant properties but also their various modes of failure. These include the following:

A. Adhesive Failure: The sealant loses bond with joint substrates. Sealants must tenaciously grip both sides of a joint, but may require a bond breaker or backer rod to prevent the sealant from adhering to the backing substrate. Adhesion testing prior to construction is recommended. Nonporous, and even some porous substrates, may require priming to improve adhesion. Adhesive failure is caused by the following:

1. Selecting a sealant that is not designed to adhere to the types of joint substrates existing in a project.
2. Improperly formulating or mixing a sealant so that its bonding capacity is not developed.
3. Improper preparation of joint substrates so that the sealant is not allowed to contact and wet sound surfaces. Substrates must be free of moisture, frost, dirt, sealers, paints, form release agents, contamination, corrosion, and degradation. Primer saturation could also prevent the sealant from bonding to substrates.
4. Tensile strength of the sealant exceeds its adhesive strength in the extension cycle. This condition can result from joint widths that are too narrow relative to sealant movement capabilities.
5. Hardening of sealant and loss of elasticity due to age or other causes. This condition can be caused by improper mixing of sealant components. It may occur in joints where initial adhesion is good but deteriorates after one or two years to the point where adhesive failure occurs.
6. Compression set occurs, which refers to a sealant's resistance to return to its former shape during extension after deformation under compression. Because adhesive failures typically do not occur when sealants are compressed but generally occur during extension, the cause is often attributed to poor joint preparation or poor adhesion characteristics of the sealant rather than to the actual cause, compression set. Failure of preformed foamed sealants generally is caused by loss of compression pressure against joint substrates.

B. Cohesive Failure: The sealant fails by tearing within itself while the edges remain adhered to both sides of the joint. The primary reason for cohesive failure is joint movement greater than the joint can accommodate.

C. Spalling Failure: A portion of the joint substrate pulls away with the sealant attached. This may not be the result of a failure of the sealant, but may result if the substrate material is weak or friable. Such failures may occur if the sealant lacks adequate movement capability; the higher the modulus of a sealant, the greater the stress on the bond line.

D. Intrusion Failure: Solid foreign matter intrudes into the sealant after it has necked down during extension and then, during a subsequent compression cycle, abrades the sealant in a manner that causes cohesive failure in a later tension cycle.

E. Reversion: A sealant softens and loses its elasticity, thereby simulating a return to its uncured state. This form of failure is primarily associated with urethane sealants and is defined in ASTM C 717 as "a loss of elastomeric properties and a decrease in durometer hardness of a seal or cured sealant following environmental exposure." The sealant industry is not currently in agreement as to the cause of reversion or how prevalent the problem is.

F. Crazing: Also called "alligatoring". This form of failure may be induced by normal deterioration due to weather and can eventually lead to cohesive failure.

G. Bubbling: This condition is caused by gas escaping from the sealant, backer rods, or substrates, and can destroy the sealant's integrity when bubbles rupture. Moisture in the substrate is a primary cause of bubbling, but it is also often caused by air entrainment during mixing of liquid sealants.

H. Appearance-Related Failures: These failures include bloom, organic growth, color change, and chalking. Bloom is where fluids within the sealant migrate to the sealant's surface. Organic growth is where algae, mildew, or other microorganisms grow on the sealant's surface and produce roots, which not only penetrate the sealant but also consume it. Color change results from unstable pigments or an adverse chemical reaction with another chemical in contact with the sealant. Chalking is where powder forms on the sealant's surface and can indicate disintegration of the base polymer as a result of weathering.

END OF SECTION

08 DIVISION

OPENINGS

TABLE OF CONTENTS

DIVISION 08: OPENINGS

081113	Hollow Metal Doors and Frames
081116	Aluminum Doors and Frames
081416	Flush Wood Doors
081613	Fiberglass Doors and Frames
083113	Access Doors and Frames
083320	Overhead Coiling Doors and Grilles
083613	Sectional Doors
084413	Glazed Aluminum Curtain Walls
085113	Aluminum Windows
085200	***Wood Windows***
085410	Fiberglass Windows
085656	Security Window Screens / Glazing
086300	Metal-Framed Skylights
087100	Door Hardware
087113	Automatic Door Operators
088000	Glazing
088300	Mirrors
089000	Louvers and Vents

SECTION 081113

HOLLOW METAL DOORS AND FRAMES

GENERAL ***GUIDELINES***

1.1 SECTION INCLUDES

A. Qualitative requirements for hinged doors, fixed panels, and frames manufactured from carbon steel.

1.2 QUALITY ASSURANCE

A. Steel Door and Frame Standard: Comply with ANSI A250.8.

1.3 MATERIALS

A. Cold-Rolled Steel Sheet: ASTM A1008, Commercial Steel, Type B; suitable for exposed applications.
   1. Application: Interior, unless otherwise noted.

B. Metallic-Coated Steel Sheets: ASTM A653, Commercial Steel, Type B, with an A60 zinc-iron-alloy (galvannealed) coating; stretcher-leveled standard of flatness.
   1. Application: Exterior openings.

1.4 DOORS

A. Interior Doors: Provide doors complying with requirements indicated below by referencing ANSI 250.8 for level and model and ANSI A250.4 for physical endurance level:
   1. Level 3 and Physical Performance Level A (Extra Heavy Duty), Model 2 (Seamless) or Model 3 (Stile and Rail).

B. Exterior Doors: Provide doors complying with requirements indicated below by referencing ANSI 250.8 for level and model and ANSI A250.4 for physical endurance level:
   1. Level 3 and Physical Performance Level A (Extra Heavy Duty), Model 2 (Seamless) or Model 3 (Stile and Rail).

1.5 FRAMES

A. Frames for Interior Openings: 0.053 inch thick steel (16 gauge).

B. Frames for Exterior Openings: 0.053 inch thick steel (16 gauge).

END OF SECTION

SECTION 081116

ALUMINUM DOORS AND FRAMES

GENERAL ***GUIDELINES***

1.1 SECTION INCLUDES

A. Qualitative requirements for hinged or pivoting doors and fixed panels manufactured from aluminum.

1.2 STANDARD FULL GLASS ALUMINUM DOORS

A. Major portions of the door stiles shall be .125 inch in thickness, and glazing molding shall be .050 inch thick.

B. Doors ***Design: Wide stile.***

1. Interior glazing stops shall be square snap-in type with neoprene bulb type glazing. Square stops on exterior side shall be lock-in tamperproof type. No exposed screws shall be required to secure stops.

C. Door shall be weatherstripped on 3 sides with metal backed pile cloth installed in the door and/or frame. An adjustable weatherstrip astragal with stainless steel backing shall be provided at the meeting stiles of a pair of doors.

1.3 FLUSH ALUMINUM DOORS

A. Standard Flush Aluminum Doors, for Manual Swing Operation

1. Provide minimum 1-3/4 inch thick doors constructed from the following:

a. Framing and Hardware Backup: Extruded aluminum tubing, 0.125 inch minimum thickness.

b. Facing; provide one of the following:

1) Seamless aluminum sheet 0.062 inch thick; smooth, ribbed, or pebbled texture; laminated to 0.125 inch tempered hardboard.

2) Seamless aluminum sheet 0.090 inch thick; smooth, ribbed, or pebbled texture.

3) Combined 0.100 inch thick tube shapes with smooth or ribbed texture.

2. Core: Rigid insulating material of not less than 2.0 lb/cu.ft. density.

3. Exterior stops shall be an integral part of the door construction with a minimum wall thickness of .132 inch and minimum height of 3/4 inch. Glazing tape shall be applied to stop prior to installation of glass or panel. Doors shall be interior glazed with 3/4 inch high extruded aluminum snap-in glass stops with a minimum wall thickness of .060 inch with a roll-in gasket.

1.4 HARDWARE

A. Door shall be modified in width for continuous gear hinge installation.

END OF SECTION

SECTION 081416

FLUSH WOOD DOORS

GENERAL ***GUIDELINES***

1.1 SECTION INCLUDES

A. Qualitative requirements for hinged doors and fixed panels with flush panel construction; solid cores; wood veneers.
   1. Flush wood doors.

1.2 QUALITY ASSURANCE

A. Quality Standards: WDMA I.S. 1-A.

1.3 INTERIOR SOLID CORE DOORS

A. Grade: Custom grade with “A” faces.

B. Cut: Plain sliced or rotary cut.

C. Match between Veneer Leaves: Book or slip match.

D. Assembly of Veneer Leaves on Door Faces: Running match.

E. Construction: 5-ply construction with particleboard, stave core, or “SCL” structural composite lumber core with stiles and rails glued to core.

F. WDMA I.S. 1-A Performance Grade: Extra Heavy Duty

1.4 FITTING AND FINISH

A. Fitting: Factory prefit and premachine doors.

B. Factory Finish: Transparent factory finish, WDMA TR-4 conversion varnish or TR-6 catalyzed polyurethane.
   1. Grade: Custom

LEED SUGGESTIONS

2.1 Many domestic hardwood species are readily available, and as certified wood, including some that produce strikingly attractive veneers. Cherry, American black walnut, pecan, and butternut provide fine veneers. Brown ash, figured hard maple, red gum, or hickory can also provide fine veneers that are out of the ordinary. Red and white oak, white ash, and American elm also produce fine-quality veneers. Using less well-known tropical species that are not endangered may also be environmentally desirable because it may encourage sustainable forestry. The database “Woods of the World”, Version 2.5, listed in the “References” article in these evaluations, provides information for many lesser-known tropical hardwoods that are not endangered.

2.2 All door core materials use fast-growing, low-density wood species that are typically farmed or removed as weeds from hardwood stands. None require cutting old-growth stands, so environmental implications associated with decisions about core type are generally not critical. For particleboard cores, however, there is a possibility for positive environmental effects, because particleboard is available made from recycled wood as well as from straw, which is an agricultural waste. Recycled content of particleboard can consist of sawdust and scraps from lumber mills or urban wood waste from demolition activities or from tree trimming.

2.3 LEED Rating: The U.S. Green Building Council's (USGBC) LEED for Schools, requires that a minimum of 50% of wood-based materials be certified as having been obtained from forests that comply with FSC STD-01-001, FSC Principles and Criteria for Forest Stewardship, in order for a building to qualify for LEED Credit MR 7. The Section Text includes optional paragraphs to require flush wood doors produced from certified wood and to require documentation of chain of custody for the wood. Note that USGBC will allow credit for the full value of the door as certified wood if the door manufacturer is listed for chain-of-custody certification and at least 70% of the wood materials in the door are from certified forests; otherwise, it only allows credit for the value of the certified wood materials used in making the door.

END OF SECTION

SECTION 081613

FIBERGLASS DOORS ***AND FRAMES***

GENERAL ***GUIDELINES***

1.1 SECTION INCLUDES

A. Qualitative requirements for fiberglass reinforced plastic (FRP) doors and frames.

1.2 WARRANTY

A. Materials: 10 years

1.3 MATERIALS

A. Door
1. Door Face Sheets
a. ***Fiberglass reinforced plastic.***
b. Total door thickness to be a nominal 1-3/4 inch.

2. Internal Construction
a. Core
1) ***Rigid Insulation or*** Polyurethane Foam Core (non-rated interior)
2) Mineral Core – fire-rated.
b. Stiles and Rails: Pultruded fiberglass ***or aluminum tubes. Wood is not acceptable.***

B. Door Frames ***(optional)***: High modulus pultruded structural RFP shape.
1. The frame section shall be standard double rabbeted. 5-3/4 inches deep by 2 inch face, 3/16 inch thick, with integral 5/8 inch doorstop, to match typical hollow metal configurations.
2. Design may use either aluminum or fiberglass frames.

END OF SECTION

SECTION 083113

ACCESS DOORS AND FRAMES

GENERAL GUIDELINES

1.1 SECTION INCLUDES

A. Qualitative requirements for access doors and panels in walls and ceilings.

1.2 QUALITY ASSURANCE

A. Fire-Rated Vertical Access Doors and Frames: NFPA 252 or ***UL 10 B.***

B. Fire-Rated Horizontal Access Doors and Frames: ASTM E119 or UL 263.

1.3 ACCESS DOORS

A. Frames: minimum 0.060 inch thick sheet steel (16 gauge) with flange suitable for adjacent material.

B. Doors: minimum 0.075 inch thick sheet steel (14 gauge).

C. Door Type
1. Flush panel, unless noted otherwise.
2. Recessed panel, at gypsum wallboard and acoustical ceiling.
3. Fire-rated where indicated.

D. Locking Devices: Cylinder locks where exposed to public.
1. Screw driver latching may be used where access to door is controlled, i.e. janitor's closet.

END OF SECTION

SECTION 083320

OVERHEAD COILING DOORS AND GRILLES

GENERAL GUIDELINES

1.1 SECTION INCLUDES

A. Qualitative requirements for doors and grilles that open by folding as an accordion or as a set of panels.
   1. Coiling counter doors.
   2. Overhead coiling doors.
   3. Overhead coiling grilles.
   4. Wood counter shutters.

1.2 QUALITY ASSURANCE

A. Fire Rated Assemblies: NFPA 80, and acceptable testing agency listing.

B. ***Energy Performance at Insulated Standard Service Door***
   1. ***Thermal Requirements (Assembly): U-0.500 maximum (R-2, minimum).***
   2. ***Air Leakage: Shall not exceed 0.2 cfm/ft^2 when tested at a pressure of at least 1.57 pounds per square foot (psf) in accordance with AAMA/WDMA/CSA 101/I.S.2/A440 or NFRC 400.***

1.3 COILING COUNTER DOORS

A. Type
   1. Standard counter door.
   2. Fire rated counter door.

B. Door curtain, provide one of the following:
   1. Zinc-coated (galvanized) cold-rolled structural steel (ss) sheet, complying with ASTM A653, G90 coating designation.
   2. Stainless steel, Type 304 Series, ASTM A666.

C. Slat Profile: Flat face slats.

1.4 OVERHEAD COILING DOORS

A. Type
   1. Standard service door.
   2. Insulated standard service door.
   3. Fire rated service door.
      a. Motor operated for testing.

B. Door Curtain, provide one of the following:
   1. Zinc-coated (galvanized) cold-rolled structural steel (ss) sheet, complying with ASTM A653, G90 coating designation.
   2. Stainless steel, Type 304 Series, ASTM A666.

C. Slat Profile: Flat face slats.

1.5 OVERHEAD COILING GRILLES

A. Grille curtain and finish, provide one of the following:
   1. Stainless steel, AISI Type 302/304 with No. 4 satin finish.
   2. Aluminum, ASTM B 221, with clear anodized finish.
   3. Hot dip zinc (galvanized), complying with ASTM A123 or electrogalvanized complying with ASTM 653.

LESSONS LEARNED

2.1 Overhead coiling doors, sometimes called rolling doors, include non-insulated, insulated, and fire-rated service doors that have traditionally been used where security, smoke, containment, and fire containment are primary considerations. An advantage of coiling doors is their compact door storage assembly, which is at the head of the opening, frequently above the suspended ceiling height.

2.2 The installation and maintenance of doors and assemblies used to protect openings against the spread of fire and smoke are regulated by NFPA 80. This standard requires door testing and labeling with fire-resistance ratings that requires that fire-rated doors be installed in fire-rated construction. Overhead doors cannot be used to close off a means of egress unless special provisions are made for an emergency pass door within or adjacent to the rated door.

END OF SECTION

SECTION 083613

SECTIONAL DOORS

GENERAL GUIDELINES

1.1 SECTION INCLUDES

A. Qualitative requirements for doors that open by moving upward into a nonvertical position, guided on a track.

1.2 PERFORMANCE REQUIREMENTS

A. Operation-Cycle Requirements: Provide sectional overhead door components and operators capable of operating for not less than 5,000 cycles.

B. ***Energy Performance:***
1. ***Thermal Requirements (Assembly): U- .22, maximum (R-4.5 minimum).***
2. ***Air Leakage: Shall not exceed 0.2 cfm/ft^2 when tested at a pressure of at least 1.57 pounds per square foot (psf) in accordance with AAMA/WDMA/CSA 101/I.S.2/A440 or NFRC 400.***

1.3 SECTIONAL OVERHEAD DOORS

A. Steel Door Sections: Insulated panels.
1. Frame and Panels: Galvanized (G60) steel frame and steel panels.
   a. Steel Thickness for Sectional Faces: 0.040 inch thick (20 gauge).
2. Thermal Insulation

B. Track: Galvanized Steel.

C. Weather Seals.

D. Windows: Optional.

E. Operation: Manual or Electric Door Operator.

1.4 AUXILIARY MATERIALS

A. Automatic reversing control for bottom bar for electric sectional overhead doors.

END OF SECTION

SECTION 084413

GLAZED ALUMINUM CURTAIN WALLS

GENERAL GUIDELINES

1.1 SECTION INCLUDES

A. Qualitative requirements for glazed curtain walls with metal framing members.

1.2 QUALITY ASSURANCE

A. Energy Performance: Glazed aluminum curtain walls shall have energy performance ratings per NFRC.

1. Thermal ***Requirements (Assembly)***): ***U-0.45, maximum (R-2.2 minimum) but s***hall not be less than value determined by Mechanical Engineer by "Building Modeling" in order to meet project's LEED objectives.

2. Air Leakage: Shall not exceed 0.06 cfm/ft^2 when tested at pressure of at least 1.57 pounds per square foot (psf) or higher in accordance with NFRC 400 or ASTM E283.

1.3 GLAZED ALUMINUM CURTAIN WALLS

A. Primary Components: Extruded aluminum framing, internal reinforcement, trim, and filler units, sealants, and gaskets.

B. Glazing: Refer to Division 08, Section "Glazing".

C. Construction: Thermally improved.

END OF SECTION

SECTION 085113

ALUMINUM WINDOWS

GENERAL GUIDELINES

1.1 SECTION INCLUDES
- A. Qualitative requirements for fixed and operable aluminum framed windows used singly and in multiples.

1.2 QUALITY ASSURANCE
- A. Manufacturer shall certify that windows have been tested and conform to AAMA/WDMA 101/I.S.2.
  1. Performance Class: AW Architectural.
  2. Performance Grade: Not less than 60.
- B. Energy Performance: Aluminum windows shall have energy performance ratings per NFRC.
  1. Thermal Requirements (Assembly): U-0.55, maximum, (R-1.8 minimum) but shall not be less than value determined by Mechanical Engineer by "Building Modeling" in order to meet project's LEED objectives.
  2. Air Leakage: Shall not exceed 0.2 cfm/ft^2 when tested at a pressure of at least 1.57 pounds per square foot (psf) in accordance with AAMA/WDMA/CSA 101/I.S.2/A440 or NFRC 400.
  3. ***Provide early delivery sample window of the type and profile used in the classrooms for the mock-up required in the Unit Masonry section 042000.***

1.3 ALUMINUM WINDOWS
- A. Window Operation
  1. Projected.
  2. Casement.
  3. Fixed.
  4. Awning.
  5. Top hinged in-swinging windows.
- B. Glazing: Sealed Insulated Units
  1. Refer to Division 08, Section "Glazing".
- C. Construction: Thermally improved as required to meet energy requirements.

1.4 AUXILIARY MATERIALS
- A. Insect Screening: Provide at operable vents.
  1. Aluminum frame.
  2. Screen: Glass-fiber-mesh, aluminum wire, or solar-screening mesh.
  3. Wickets: Sliding or hinged.
- B. Blinds Between Glazing: Where required at vision glass, provide remotely operated horizontal louver blinds in the space between glazing panes. Construct blinds of aluminum shades, equipped for tilting, raising, and lowering by standard operating hardware located on inside face of sash.
  1. Access Panel: Shall be hinged, lift-off type not acceptable.

END OF SECTION

SECTION 085200

WOOD WINDOWS

GENERAL GUIDELINES

1.1 SECTION INCLUDES

A. Qualitative requirements for fixed and operable wood framed windows used singly and in multiples.

1. Aluminum or vinyl clad

1.2 QUALITY ASSURANCE

A. Provide wood windows of performance class and grade indicated that comply with ***AAMA / WDMA 101 / I.S.2 / NAFS***

1. Performance Class: C minimum.
2. Performance Grade: 30 minimum.

B. Energy Performance: Windows shall have energy performance ratings per ***NFRC-100.***

1. Thermal Transmittance (u-factor): Shall not be less than value determined by Mechanical Engineer by "Building Modeling" in order to meet project's LEED objectives.
2. ***Provide early delivery sample window of the type and profile used in the classrooms for the mock-up required in the Unit Masonry section 042000.***

1.3 WOOD WINDOWS

A. Window Operation

1. Projected.
2. Casement.
3. Fixed.
4. Single-Hung.

1.4 MATERIALS

A. Aluminum Cladding

1. Trim Members: Provide aluminum-clad wood, hollow-aluminum extrusions, or roll-formed aluminum trim members.

B. Vinyl Cladding

1. Trim Members: Vinyl-Clad Wood.

C. Hardware

1. Operating Device: Combination lever handle or crank Cam latch lock.
2. Hinges: Heavy-duty, two-knuckle butt hinges (Minimum of two per ventilator).

D. Glazing: Sealed Insulated Units

1. Refer to Division 08, Section "Glazing".

1.5 AUXILIARY MATERIALS

A. Insect Screening

1. Provide at operable vents.
2. Screen: Glass-fiber-mesh or aluminum wire fabric.
3. Wickets: Sliding or hinged.

B. Blinds Between Glazing: Where required at vision glass, provide remotely operated horizontal louver blinds in the space between glazing panes. Construct blinds of aluminum slats equipped to tilting, raising, and lowering by standard operating hardware located on inside face of sash.

C. Insulating-Foam Sealant: Refer to Division 08, Section "Thermal Insulation."

D. Aluminum subsill and sill flashing.

LESSONS LEARNED

3.1 Water infiltration is a problem only if there is not a means for controlling its path and weeping the water out. Proper installation methods for installing wood windows need to include a means of controlling water even if it comes from within the wall cavity.

3.2 Most schools are a brick and block design and ***wood windows*** need to be installed with an installation clip. Proper exterior sealant and application of interior foam is critical to create a "dead air" space in the wall cavity. This dead air space will help prevent the negative interior pressure of the building trying to pull any water into the building. The second critical installation item is use of a subsill, especially when units are mulled together. Use of a subsill system will provide a path for any water that penetrates the ***window assembly*** to ***drain*** without causing damage to the windows ***or building***.

3.3 A mock-up and a pre-installation conference ***are necessary to verify*** coordination with ***the air barrier*** and ***to prevent*** water infiltration.

END OF SECTION

SECTION 085410

FIBERGLASS WINDOWS

GENERAL GUIDELINES

1.1 SECTION INCLUDES

A. Qualitative requirements for fiberglass windows.

1.2 QUALITY ASSURANCE

A. Provide fiberglass windows of performance class and grade indicated that comply with AAMA/NWWDA 101.1.5.2
   1. Performance Class: C minimum.
   2. Performance Grade: 30 minimum.

B. Energy Performance: Fiberglass windows shall have energy performance ratings per NFRC.
   1. Thermal Requirements (Assembly): U-0.55, maximum, (R-1.8 minimum) but shall not be less than value determined by Mechanical Engineer by "Building Modeling" in order to meet project's LEED objectives.
   2. Air Leakage: Shall not exceed 0.2 cmf/ft^2 when tested at a pressure of at least 1.57 pounds per square foot (psf) in accordance with AAMA/WDMA/CSA 101/I.S.2/A440 or NFRC 400.
   3. Provide early delivery sample window of the type and profile used in the classrooms for the mock-up required in the Unit Masonry section 042000.

1.3 FIBERGLASS WINDOWS

A. Window Operation
   1. Projected.
   2. Casement.
   3. Fixed.
   4. Single-Hung.

1.4 MATERIALS

A. Fiberglass: AAMA 305 glass fiber reinforced thermoset profile.

B. Glazing: Refer to Division 08, Section "Glazing".

1.5 AUXILIARY MATERIALS

A. Insect Screening
   1. Provide at operable vents.
   2. Screen: Glass-fiber-mesh or aluminum wire fabric.
   3. Wickets: Sliding or hinged.

B. Integral Louver (Venetian) Blinds.

END OF SECTION

SECTION 085656

SECURITY WINDOW SCREENS ***/ GLAZING***

GENERAL GUIDELINES

1.1 SECTION INCLUDES

A. Qualitative requirements for security window screens for preventing glass breakage and forced entry.

1. Security glazing may be used in lieu of mesh.

1.2 PERFORMANCE REQUIREMENTS

A. Test Requirements:

1. Comply with test criteria of SMA 6001-2002 ***for screens.***

a. Impact Test: An impact of 50 ft/lbs of force causing a deflection of not more than 3 inches as specified for medium rating.

b. Sag Test: 90 lbs. of weight applied for 5 minutes with a permanent sage of not more than 0/063 inches as specified for heavy rating.

c. Force Entry Test: Three loads of force: A:150 lbs, B: 300 lbs, C:50 lbs applied to screen. As specified for heavy rating.

2. Security glazing shall comply with Forced-Entry Resistance: Class III per ASTM F 1233.

B. Product Certificates ***(screens)***: Certifications, performance and testing must comply with impact, sag, and forced entry resistance requirements of SMA 6001-2002. Manufacturer must submit the AAMA notice of product certification in compliance with CFR 200.935 as “Security Screen-medium”.

1.3 MATERIALS

A. Aluminum Extrusions: All frame and retainer sections shall be extruded aluminum shaped produced from commercial quality 6063-T5 alloy and shall be free from defect that impair strength and durability.

B. Sub Frame: All sub frame members to be made of extruded aluminum alloy with a nominal wall thickness of .062 inches that incorporates an aluminum snap on cover to conceal the installation fasteners. All frame corners to be miter cut and crimped.

C. Hinge: Two hinges shall be located at the jamb opposite of the operating mechanisms. Each hinge shall fit in an aluminum raceway that allows for removal of hinge or adding of hinges without the need of processing to the subframe or screen. The hinges shall be powder-coated pre-assembled 3-wing design made of aluminum, using nylon bushings. Pins, pressure, plates, and screws shall be stainless steel. Grub screw to allow removal of pin, grub screw shall only be accessible once the screen is opened.

D. Screens: Screen to be full configuration and be operable. Screen main frame to be of mitered construction and contain a noise reduction gasket to prevent rattle between main frame and sub frame, frame members and tie bar to have a hollow, with.078 nominal wall thickness. No exposed fastener to the interior or exterior will be acceptable. Screen to lock in a closed secure position by means of a single point release lock.

E. Mesh: Screen cloth to be .028 inch stainless steel 12 x 12 mesh black painted. Each edge of screen to have a 1/2 inch 90 degree bend.

1. Laminated Polycarbonate (option to mesh): Polycarbonate sheets laminated with clear urethane interlayer that complies with ASTM C 1349, Appendix X2, and has a proven record of no tendency to bubble, discolor, or lose physical and mechanical properties after fabrication and installation. Provide laminated units that comply with requirements of ASTM C 1349 for maximum allowable laminating process blemishes and haze.

F. Locking Mechanism: Provide single handle that activates a cast metal bolt at the sill and a two directional metal lock and keeper mid span of the upper lite.

G. Limit Device: An adjustable arm made of galvanized steel shall be located at the head to limit the screen from swinging open past 90 degrees from the manufacturer, field adjustment shall be possible to accommodate existing conditions. Optional hold open stays are available.

END OF SECTION

SECTION 086300

METAL-FRAMED SKYLIGHTS

GENERAL GUIDELINES

1.1 SECTION INCLUDES

A. Qualitative requirements for factory assembled and field assembled aluminum frame skylight systems with insulating glazing consisting of either polycarbonate, heat strengthened and laminated glass units, or translucent fiberglass sandwich panels.

1.2 QUALITY ASSURANCE

A. Energy Performance:

1. Thermal Requirements (Assembly):

a. Skylight with Curb, Glass: U-1.17 maximum, (R- .85 minimum) but shall not be less than value determined by Mechanical Engineer by "Building Modeling" in order to meet project's LEED objectives.

b. Skylight with Curb, Plastic: U- 1.10 maximum, (R- .91 minimum) but shall not be less than value determined by Mechanical Engineer by "Building Modeling" in order to meet project's LEED objectives.

c. Skylight without Curb, All: U- .69 maximum (E- 1.45 minimum), but shall not be less than value determined by Mechanical Engineer by "Building Modeling" in order to meet project's LEED objectives.

2. Air Leakage: Shall not exceed 0.3 cfm/ft2 for unit skylights having condensation weepage openings, when tested at a pressure of at least 1.57 pounds per square foot (psf) in accordance with AAMA/WDMA/CSA 101/I.S.2/A440 or NFRC 400.

1.***3*** UNIT SKYLIGHTS

A. Integral Curb: Self-flashing type.

B. Polycarbonate glazing: Thermoformable extruded polycarbonate sheets with a minimum impact strength of 12 foot/lb. Per ASTM D 256, test method A, and burglar resistant per UL 972. UV resistant and double glazed.

C. Insulating Glass:

1. Exterior lite 1/4 inch heat strengthened glass.
2. Interior lite 2 plies 1/8 inch clear, heat strengthened glass with 0.030 clear polyvinyl butyral interlayer.
3. Low E coating.

D. Fiberglass sandwich panel: Manufacturer’s standard, uniformly colored, translucent fiberglass reinforced polymer face sheets permanently adhered to a grid core.

E. Aluminum Components.

F. Thermal break.

G. Protective screens when required by Design Team.

1.***4*** FRAMED SKYLIGHTS

A. Framing Materials: Aluminum.

1. Extrusions: ASTM B221.
2. Sheet and plate: ASTM B 209.
3. Bars, rods, and wire: ASTM B 211.

B. Polycarbonate Insulating Panels: Double layer, minimum 2.2 inches thick.

C. Insulating Glass

1. Exterior lite: Heat strengthened glass.
2. Interior lite: Clear laminated glass.
3. Low-E coating.

D. Fiberglass Sandwich Panels: Manufacturer's standard, uniformly colored, translucent, fiberglass reinforced polymer sheets permanently adhered to a grid core.

1.***5*** INSTALLATION

A. Install unit skylights according to construction details of NRCA's "The NRCA Roofing and Waterproofing Manual".

END OF SECTION

SECTION 087100

DOOR HARDWARE

GENERAL GUIDELINES

1.1 SECTION INCLUDES

A. Qualitative requirements for hinges, pivots, sliding and folding door hardware, and other hanging hardware; locks, exit devices, cylinders and other latching hardware; closers, holders, self-closing hinges and other controlling hardware; and push plates, pulls, kickplates, and other door trim.

1.2 QUALITY ASSURANCE

A. Hardware for Fire Rated Openings: NFPA 80, and local requirements.

B. Materials and Application: ANSI A156 series standards.

1.3 DOOR HARDWARE

A. Quality Level: Grade 1, ANSI/BHMA A156.

B. Locksets and Latchsets: Mortise type.

C. Lock Cylinders: Interchangeable or recodeable type.

D. Keying: Owner's requirements keying and key control system.

E. Hinges and Butts: Full mortise type with nonremovable pins at exterior doors.

F. Closers, Door Control, and Exit Devices
   1. Grade 1 devices.

G. Pivots: Offset or center hung type.

H. Push/Pull Units: Through bolted type.

I. Hardware Finishes
   1. Satin chrome.
   2. Polished stainless.
   3. Satin stainless.

1.4 AUXILIARY MATERIALS

A. Door Trim Units: Kickplates, edge trim, and related trim.
B. Stops and overhead door holders.
C. Soundstripping.
D. Weatherstripping and thresholds.
E. Electromagnetic hold open devices.

LEED SUGGESTIONS

2.1 LEED for Schools requires Minimum Acoustical Performance as a prerequisite for Indoor Environmental Quality. This may require sound gasketing of the doors. The Design Team is encouraged to study this prerequisite carefully so as to avoid not being able to obtain certification by failing to meet the requirements of the prerequisite.

2.2 Selection of the proper type and quality of gasketing materials for exterior door openings can have a significant effect on energy savings for the building. The seal should be continuous around the entire perimeter of the door. High-quality closers should also be used on exterior doors to ensure that no door is inadvertently left open.

2.3 Thresholds with thermal breaks should be considered. Avoid creating conditions that interfere with the operation of other door hardware. Do not overlook difficulties that people with disabilities might encounter when using the door. Door gasketing must also be coordinated with door and frame types because benefits gained through using quality gasketing can be lost if the door does not have similar thermal performance capabilities.

LESSONS LEARNED

3.1 Carefully review OSFC's requirements for three manufacturers with your Door and Hardware consultant.

3.2 Review and coordinate door hardware characteristics and integration requirements with the Technology Designer for access control and intrusion detections systems.

END OF SECTION

SECTION 087113

AUTOMATIC DOOR OPERATORS

GENERAL GUIDELINES

1.1 SECTION INCLUDES

A. Qualitative requirements for an automatic door operator is the operating mechanism attached to a door for the purpose of mechanically opening and closing a door upon the receipt of an actuating signal.
   1. Application: Provide a minimum of one at main entrance.

1.2 AUTOMATIC DOOR OPERATOR

A. Electromechanical Operating System: Unit powered by permanent magnet dc motor; with closing speed controlled mechanically by gear train and dynamically by braking action of electric motor, and with manual operation including spring closing with power off.

LESSONS LEARNED

2.1 Indicate doors to receive automated openers on the Door Schedule.

END OF SECTION

SECTION 088000

GLAZING

GENERAL GUIDELINES

1.1 SECTION INCLUDES

A. Qualitative requirements for transparent and translucent glass for general and special purpose applications.

1.2 QUALITY ASSURANCE

A. Comply with applicable codes and regulations and with the Consumer Product Safety Commission CPSC 16 CFR 1201 and with applicable recommendations of Flat Glass Marketing Association (FGMA) "Glazing Manual."

B. Energy Performance: Glazing shall combine with framing to achieve rating per NFRC.
1. Thermal ***Requirements (Assembly)***: Shall not be less than value determined by Mechanical Engineer by “Building Modeling” in order to meet project’s LEED objectives ***for each fenestration type***.
2. Sealed Insulated Unit: Third pane glazing and blinds enclosed by third pane not required or recommended in daylighting application. Use of motorized roll-up blind is acceptable where room darkening is required.
3. Solar Heat Gain Coefficient (SHGC): Assembly maximum, 0.40.
4. When selecting windows, utilize the following chart to determine the best window for each application and exposure:

Application	**Exposure**	**Type**
View Glass (non-daylighting apertures) ***with blinds between glazing***	South	clear ***sealed insulated unit***, low-e
	North	clear ***sealed insulated unit***, low-e
	East/West, unshaded	tinted ***sealed insulated unit***, low-e
Windows above lightshelves	South	clear ***sealed insulated unit***
High windows above view glass	North	clear ***sealed insulated unit***
Roof monitor	South	clear ***sealed insulated unit***

1.3 GLASS

A. Primary Glass Products.

B. Heat Treated Glass Products.

C. Laminated Glass Units.

D. Sealed Insulating Glass Units
1. Glazing: Shall be triple glazed consisting of 1 inch thick insulated outer unit comprised of 1/4 inch outer panel, 1/2 wide hermetically sealed air or gas space, and 1/4 inch thick clear inner panel.

E. Fire-Rated Glazing Products; Provide any of the following as required to meet performance conditions:
   1. Specialty Tempered Monolithic Glass
   2. Laminated Ceramic Glazing Material
   3. Laminated Glass with Intumescent Interlayer
   4. Gel-Filled, Dual-Glazed Units
   5. Wire glass of any form is not acceptable.

1.4 GLASS USAGE

A. Exterior

1. Glass for Exterior Doors
   a. 1 inch thick insulated glass with optional low-e coating.
2. Exterior Sidelights, Transoms, Storefront, and Curtainwall: Shall be 1 inch thick insulated glass consisting of 1/4 inch thick, outer panel, a 1/2 inch wide hermetically sealed air or gas space, and 1/4 inch clear glass inner panel.
3. Windows: ***(vision glass) Sill elevation less than 6' above floor.***
4. ***Windows: (daylighting) Placed above nominal vision line and designed to provide or supplement interior illumination.***
5. Sound Rated Glazing (35 or better)
   a. Kind LT, consisting of two lites of fully tempered float glass.
   b. Outer Lite: Class 1 float glass.
      1) Thickness: 6.0 mm, minimum
   c. Inner Lite: Class 1 float glass.
      1) Thickness: 6.0 mm.
   d. Plastic Interlayer
      1) Thickness: 0.060 inch, but not less than that required to comply as a Type II safety glass material.
      2) Color: Clear, unless otherwise noted.
6. Ceramic-Coated Spandrel Insulating Glass
7. Laminated Glass for Skylights and Sloped Glazing
   a. Glazing shall be 1-1/4 inch thick insulated glass consisting of 1/4 inch thick outer panel, 1/2 inch wide hermetically sealed air or gas space, and 1/2 inch thick laminated glass inner panel.
      1) Laminated Glass: Kind LT, consisting of two lites of fully tempered float glass.
         a) Inner and Outer Light: Type I (transparent glass, flat) float glass.
            .1 Class I.
            .2 FT (fully tempered).
            .3 Thickness: 6 mm.
         b) Plastic Interlayer: 0.060 inch thick.
      2) Low Emissivity Coating: Optional.

B. Interior
1. Glass for Vestible Doors, Sidelights, and Transoms: 1/4 inch thick clear tempered glass.
2. Glass for Interior Fire Rated Doors and Windows: 1/4 inch fire-rated glazing product.
3. Glass for Interior Non-Fire Rated Doors and Windows: 1/4 inch clear tempered safety glass.
4. Sound Rated Doors (30 or better)
   a. Kind LT, consisting of two lites of fully tempered float glass.
   b. Outer Lite: Class 1 clear float glass.
      1) Thickness: 6.0 mm.
   c. Inner Lite: Class 1 clear float glass.
      1) Thickness 6.0 mm.
   d. Plastic Interlayer
      1) Thickness: 0.060 inch, but not less than that required to comply as a Type II safety glass material.
      2) Color: Clear, unless otherwise noted.
         a) Provide a semi-transparent film, where privacy is indicated.

LEED SUGGESTIONS

2.1 Carefully selecting glass and associated elements of the wall system can drastically reduce energy consumption for both winter and summer seasons. There is no simple set of instructions for absolute analysis of the situation; a range of considerations is involved.

A. Although it has been estimated that only 4% of the total energy consumption in the U.S. is heat transferred through building window glass, every source of conservation is worthy of consideration. The general public easily recognizes the window-glass heat-loss problem.

2.2 Coatings on glass are an important part of the overall capability now available for minimizing heat transmission through vision lites. Their effectiveness depends on many factors, which are explained and documented in published product literature and other publications. Solar-control low-e coatings maximize the amount of daylight transmitted through the glass, while minimizing both the amount of solar heat transmitted into the building and the amount of heat loss from the long-wave infrared portion of the heat spectrum (radiant heat generated by electric coil-type heat and sensible heat from air-handling systems). For most commercial buildings, regardless of climate, in which the primary concern is reducing the solar heat gain, the coating's location is of less concern, and placing it on either the second or third surface should remain an option; for units with clear glass on both outdoor and indoor lites, the low-e coating is typically placed on the second surface.

2.3 LEED for Schools Credit Energy and Atmosphere (Optimize Energy Performance) provides up to 10 points for improving the building performance rating compared to the baseline building performance rating per ASHRAE/IESNA 9.0.1-2004. Selecting glass to reduce energy losses through fenestration and energy consumption for cooling that is caused by solar heat gain through fenestration can help contribute toward earning some of those points. Additionally, credits for Indoor Environmental Quality that can be obtained for daylighting will be affected based on the amount and location of fenestrations. Glass selection is a factor affecting "daylighting" because it is a function of visible light transmittance.

END OF SECTION

SECTION 088300

MIRRORS

GENERAL GUIDELINES

1.1 SECTION INCLUDES

A. Qualitative requirements for unframed mirrors.

1.2 PRODUCTS

A. Glass Mirrors: ASTM C 1503.

B. Clear Glass: Nominal thickness of 6.0 mm.

C. Miscellaneous Materials: Setting blocks, edge sealer, and mirror mastic.

D. Mirror Hardware: Bottom aluminum J-channels and top aluminum J-channels.

E. Mirror Edges: Rounded polished or beveled polished.

END OF SECTION

SECTION 089000

LOUVERS AND VENTS

GENERAL GUIDELINES

1.1 SECTION INCLUDES

A. Qualitative requirements for exterior wall louvers.

1.2 QUALITY ASSURANCE

A. Wind Loads: Minimum 29 lb/sq.ft.

1.3 PRODUCTS

A. Fixed, Extruded-Aluminum Louvers
1. Exterior
a. Horizontal Storm-Resistant Louver.
b. Vertical Storm-Resistant Louver.
c. Horizontal, Drainable-Blade Louver.
d. Horizontal, Continuous-Line, Drainable-Blade Louver.
2. Interior
a. Horizontal, Nondrainable-Blade Louver.
b. Vertical, Sightproof, Louver.
c. Fixed, Acoustical Louver.

B. Louver Screens
1. Provided at each exterior louver.
2. Screening Type: Bird screening.

C. Blank-Off Panels: Uninsulated or insulated.

D. Wall Vents (Brick Vents): Extruded or cast aluminum.

END OF SECTION

09 FINISHES

DIVISION

TABLE OF CONTENTS

DIVISION 09: FINISHES

092116	Gypsum Board Assemblies
092400	Portland Cement Plastering
092513	Acrylic Plaster Ceilings
093000	Tiling
095113	Acoustical Panel Ceilings
096400	Wood Flooring
096466	Wood Athletic Flooring
096500	Resilient Flooring
096516	***Linoleum Flooring***
096566	Resilient Athletic Flooring
096723	Resinous Flooring
096766	Fluid-Applied Athletic Flooring
096813	Tile Carpeting
096816	Sheet Carpeting
096900	Access Flooring
098000	Acoustic Treatment
099100	Painting
099300	Staining and Transparent Finishing
099419	MultiColored Coating System
099600	High-Performance Coatings

SECTION 092116

GYPSUM BOARD ASSEMBLIES

GENERAL ***GUIDELINES***

1.1 SECTION INCLUDES

A. Qualitative requirements for non-structural metal support assemblies for gypsum board and interior gypsum board, gypsum board assembles, accessories, and trim.

1.2 QUALITY ASSURANCE

A. Refer to "Recommended Specification on Levels of Gypsum Board Finish" as published by the Gypsum Association (and AWCI/CISCA/PDCA) for finish levels required.

B. Recommended deflection limit for gypsum board assemblies is L/240.
1. Tile finishes applied to cementitious backer units will require deflection limits of L/360 or less.

1.3 STEEL FRAMING

A. Steel Framing, General: Comply with ASTM C 754 for conditions indicated.
1. Steel Sheet Components: Metal complying with ASTM C 645 requirements.
   a. Protective Coating:
      1) Interior Applications: ASTM A 653, G40 (Z120), hot-dip galvanized zinc coating.

B. Partition and Soffit Framing:
1. Steel Studs and Runners
2. Slip-Type Head Joints
   a. Double Runner
   b. Deflection Track
   c. Firestop Track
3. Flat Strap and Bracing Plate
4. Cold-Rolled Channel Bridging
5. Flat-Shaped, Rigid Furring Channels
6. Cold-Rolled Furring Channels
7. Z-Shaped Furring

C. Suspension Systems
1. Wire Hangers
2. Flat Hangers
3. Carrying Channels
4. Furring Channels
5. Grid Suspension Systems for Ceilings

1.4 PANEL PRODUCTS

A. ***General:*** Interior Gypsum Wallboard***;*** 5/8 inch minimum thickness, Type X.

1. Abuse/Impact/Mold-Resistant Gypsum Panels: Panels shall comply with ASTM C 1629, Level 1 requirements.

2. Moisture and Mold Resistant Gypsum Wallboard: Moisture and mold-resistant core and surfaces. Gypsum board shall be designed to provide extra protection against mold and mildew compared to standard paper-faced wall board products. When tested by an independent lab per ASTM D 3273 ("Standard Test Method for Resistance to Growth of Mold on the Surface of Interior Coatings in an Environmental Chamber") gypsum board shall achieve an average panel score of 8 or greater out of a possible high score of 10.

B. Tile-Backing Panels

1. Cementitious Backer Units
   a. Application: Provide as tile backer at all "wet walls".
2. Glass-Mat, Water-Resistant Backing Board

1.5 TRIM ACCESSORIES

A. Interior Trim

1. Cornerbead: Use at outside corners.
1. LC-Bead: Use at exposed panel edges.
2. Expansion (Control) Joint: Maximum 30 ft. o/c.

1.6 JOINT TREATMENT MATERIALS

A. Joint Tape

B. Joint Compound for Interior Gypsum Wallboard: For each coat use formulation that is compatible with other compounds applied on previous or for successive coats.

1. Prefilling: At open joints and damaged surface areas, use setting-type taping compound.
2. Embedding and First Coat: For embedding tape and first coat on joints, flanges of trim accessories, and fasteners, use setting-type taping compound.
3. Fill Coat: For second coat, use drying-type, all-purpose compound.
4. Finish Coat: For third coat, use drying-type, all-purpose compound.
5. Skim Coat: For final coat of Level 5 finish, use drying-type, all-purpose compound.

1.7 AUXILIARY MATERIALS

A. Sound Attenuation Blankets

<u>LEED SUGGESTIONS</u>

2.1 LEED for Schools provides a credit under Interior Environmental Quality for specifying low-emitting materials for gypsum board, insulation, acoustical ceiling systems, and wall coverings.

LESSONS LEARNED

3.1 Mold-related claims against building owners are increasing. Reasons asserted for the increase in mold-related lawsuits include tighter building envelopes that hinder the escape of moisture, the use of building materials with organic components that “feed” mold (such as paper facings on gypsum board), shorter construction schedules that sequence finish work before the interior environment is conditioned, and inadequate protection of construction materials before, during, and after installation. Requirements for installing interior gypsum products in semi-conditioned spaces need consideration.

END OF SECTION

SECTION 092400

PORTLAND CEMENT PLASTERING

GENERAL ***GUIDELINES***

1.1 SECTION INCLUDES

A. Qualitative requirements for interior and exterior plastic (stucco) finishes, including furring, lathing, accessories, and trim for plaster.

1.2 FRAMING/METAL LATH

A. Lath and Plaster Support Systems
1. Metal Supports for Suspended and Furred Ceiling: ASTM C 1063.
2. Steel Studs and Runners, Nonload (Axial) Bearing: ASTM A 645-00, G60.
3. Expanded Metal Lath: ASTM C 847, self-furring diamond mesh or rib lath; ASTM A 653 G60.
4. Woven Wire Lath: ASTM C 1032, galvanized steel wire.
5. Welded Wire Lath: ASTM C 933, galvanized steel wire.

1.3 PORTLAND CEMENT PLASTER

A. Application
1. 3 coats over metal lath type.
2. 3 coats over concrete unit masonry type.

1.4 ACCESSORIES

A. Accessories: ***Zinc-coated (galvanized) steel.***

END OF SECTION

SECTION 092513

ACRYLIC PLASTER CEILINGS

GENERAL ***GUIDELINES***

1.1 SECTION INCLUDES

A. Qualitative requirements for factory mixed acrylic emulsion coating systems, formulated with colorfast mineral pigments and fine aggregates for use over sheathing for high humidity and abuse ceiling ***and exterior soffit*** applications.

1.2 SHEATHING

A. Glass-Mat Gypsum Backing Board.

B. Exterior Cement Board.

C. Tile Backer.

1.3 FINISH SYSTEM – MATERIALS

A. Reinforcing Mesh: Nominal 4.2 oz./sq.yd., symmetrical, interlaced open weave glass fiber fabric.

B. Base Coat: Acrylic based, fiber reinforced, flexible waterproofer.

C. Primer: A synthetic resin, pigmented, copolymer based primer. Tint to same shade as finish.

D. Finish Coat Materials: Manufacturer's siliconized acrylic based coating complying with the following requirements for material composition and method of combined materials:

1. Factory mixed formulation of polymer emulsion binder, colorfast mineral pigments, sound stone particles, and fillers.

END OF SECTION

SECTION 093000

TILING

GENERAL ***GUIDELINES***

1.1 SECTION INCLUDES

A. Qualitative requirements for manufactured surfacing units of impervious, vitreous, semi-vitreous, and non-vitreous materials; glazed, unglazed, abrasive, and textured surfaces and related mortar, grout, trim, antifracture membranes and accessories.

1.2 QUALITY ASSURANCE

A. Tile Council of North America (TCA) “Handbook for Ceramic Tile Installation” shall be used as a guide to assist in standardizing installation specifications.

B. ANSI Ceramic Tile Standard: Provide tile that complies with A137.1, “Specifications for Ceramic Tile”.

C. ANSI Standards for Tile Installation Materials: Provide materials complying with ANSI Standards referenced in “Setting and Grouting Materials” Article.

1.3 UNGLAZED CERAMIC MOSAIC TILE

A. Type: Porcelain factory-mounted flat tile with abrasive admixture at wet areas.

B. Thickness: 1/4 inch nominal.

C. Face: Plain face with cushion edges.

1.4 GLAZED CERAMIC MOSAIC TILE

A. Type: Porcelain factory-mounted flat tile.

B. Thickness: 1/4 inch nominal.

C. Face: Plain face with cushion edges.

1.5 UNGLAZED QUARRY TILE

A. Wearing Surface: Provide one of the following:
   1. Nonabrasive, smooth
   2. Nonabrasive, textured
   3. Abrasive aggregate embedded in surface

B. Thickness: 1/2 inch nominal

C. Face: Plain or patterned face

1.6 UNGLAZED PAVER TILE

A. Composition: Porcelain

B. Thickness: 3/8 inch nominal

C. Face: Plain with square or cushion edges

1.7 GLAZED WALL TILE

A. Type: Interior type body, flat tile.

B. Thickness: 5/16 inch nominal.

C. Face: Plain face with modified square or cushion edges.

1.8 SETTING MATERIALS

A. Portland Cement Mortar: ANSI A 108.1A.

B. Dry-Set Portland Cement Mortar: ANSI A 118.1.

C. Latex-Portland Cement Mortar: ANSI A 118.4.
1. Prepackaged dry mortar mix.

D. Chemical-Resistant, Water-Cleanable, Tile-Setting and Grouting Epoxy: ANSI A 118.3.

E. Water-Cleanable, Tile-Setting Epoxy Adhesive: ANSI A 118.3.

1.9 GROUT

A. Sand-Portland Cement Grout: ANSI A 108.10.

B. Polymer – Modified Tile Grout: ANSI A 118.7.

C. Standard Sanded Cement Grout: ANSI A 118.6.

D. Standard Unsanded Cement Grout: ANSI A 118.6.

E. Chemical-Resistant, Water-Cleanable, Tile-Setting and Grouting Epoxy: ANSI A 118.3.

1.10 WATERPROOFING AND CRACK-SUPPRESSION MEMBRANES FOR THIN-SET TILE INSTALLATIONS

A. Manufacturer's standard product that complies with ANSI A 118.10.

1.11 ACCESSORIES

A. Metal Edge Strips: Provide at tile transitions to protect edge of tile.

B. Elastomeric Sealants: One-Part, Mildew-Resistant Silicone Sealant.

1.12 INSTALLATION, GENERAL

A. ANSI Tile Installation Standards: Comply with parts of ANSI A 108 Series "Specifications for Installation of Ceramic Tile" that apply to types of setting and grouting materials and to methods indicated in ceramic tile installation schedules.

1.13 SETTING METHODS

A. Method and typical detailing for tile work shall be in accordance with the following TCA alphanumeric method, listing from the "Handbook for Ceramic Tile Installation," latest edition, by the Tile Council of America.

WALL TILING INSTALLATION GUIDE

(Reprinted from the 2005 Handbook for Ceramic Tile Installation, 42nd Edition)

Simplest methods are indicated; those for heavier services are acceptable. Very large or heavy tiles may require special setting methods. Consult ceramic tile manufacturer.

SERVICE REQUIREMENTS	**WALL TYPE (numbers refer to Handbook method numbers)**					
	Masonry or Concrete	Page	Woods Stud	Page	Metal Studs	Page
Commercial Construction – Dry or limited water exposure: dairies, breweries, kitchens	W202 W221 W223	41 42 42	W223 W231 W243 W244 W246	42 44 45 46 47	W223 W241 W242, W243 W244 W246	42 44 45 46 47
Commercial Construction – Wet: gang showers, tubs, showers, laundries	W202 W211 W221	41 43 42	W231 W244 W246 B411 B414	44 46 47 50 52	W241 W244 W246 B411 B414, B415 B425 B426	44 46 47 50 52 51 53

WALL TILING INSTALLATION GUIDE

(Reprinted from the 2005 Handbook for Ceramic Tile Installation, 42nd Edition)

Performance – Level Requirement Guide and Selection Table

Based on results from ASTM Test Method C-627 "Standard Test Method for Evaluating Ceramic Floor Tile Installation Systems Using the Robinson Type Floor Tester." All methods are material dependent – performance rating should not exceed rating of weakest component – consult each material manufacturer for individual component rating.

SERVICE REQUIREMENTS Find required performance level and choose installation methods that meets or exceeds it. Performance results are based on ceramic tile meeting ANSI A137.1, or tile designated by tile manufacturer.	FLOOR TYPE – Numbers refer to Handbook Method numbers	
	Concrete	**Page**
Heavy: Shopping malls, stores, commercial kitchens, work areas, laboratories, auto showrooms and service areas, shipping/receiving, and exterior decks. (Passes ASTM C627 cycles 1 through 12)	F103, F111, F112 F113, F121	17, 18, 19 19, 22
Moderate: Normal commercial and light industrial use in public space of restaurants and hospitals. (Passes ASTM C627 cycles 1 through 10.)	F112, F115 F122 [c], F200 RH110, RH111 RH115, RH116	19, 20 22, 21 26, 27 27,28
Light: Light commercial use in office space, reception areas, kitchens, and bathrooms. (Passes ASTM C627 cycles 1 through 6.)	F122[c]	22

END OF SECTION

SECTION 095113

ACOUSTICAL PANEL CEILINGS

GENERAL GUIDELINES

1.1 SECTION INCLUDES

A. Qualitative requirements for ceiling panels and ceiling suspension assemblies.

1.2 QUALITY ASSURANCE

A. Acoustical Panel Quality Standard: ASTM E 1264.

B. Metal Suspension System Quality Standard: ASTM C 635.

1.3 PROJECT CONDITIONS

A. Environmental Limitations: Do not install acoustical panel ceilings until spaces are enclosed and weatherproof, wet work in spaces is complete and dry, work above ceilings is complete, and ambient temperature and humidity conditions are maintained at levels for intended use.

1.4 MINERAL BASE PANELS, WATER FELTED

A. Type, form and finish, provide one of the following:
1. ASTM E 1264, Type III or IV, Form 1 or 2 with painted finish.

1.5 PANELS WITH SCRUBBABLE FINISH (CLEANABLE)

A. Type: ASTM E 1264, Type XX or IV, or gypsum based panel.
1. USDA approved kitchens.

1.6 CEMENTITIOUS FIBER BOARD CORE

A. Type form and finish, provide one of the following:
1. ASTM E 1264, Type XIV, Form 1 (No Backing) or Form 2 (Backed with mineral or glass fiber backing), pattern I (random swirl).

1.7 SUSPENSION SYSTEMS

A. ***Metal Suspension Systems***
1. Wire hangers, braces, and ties.
2. Angle hangers.
3. Seismic perimeter stabilizer bars, struts, and clips, if required by seismic zone.
4. Hold-down clips (vestibules, restrooms).
5. Impact clips.
6. Wide-face, capped, double-web steel: Intermediate duty.
7. Wide-faced, capped, double-web, hot-dip galvanized steel: Intermediate duty.

LEED SUGGESTIONS

2.1 Acoustical Panel Ceilings if specified correctly can contribute to several LEED Credits.

A. Construction Waste Management: Most manufacturers have a take-back program eliminating construction waste for these products.

B. Low-Emitting Materials: Ceiling products can be selected that will comply with California Section 01350 requirements for low emissions.

C. Daylight and Views: Highly reflective surfaces can increase daylighting effectiveness.

D. Minimum Acoustical Performance and Enhanced Acoustical Performance: Careful review of NRC, AC, and CAC can assist in obtaining the prerequisite as well as a credit.

LESSONS LEARNED

3.1 Light reflectances for most standard products fall within the top range of 0.75 LR or greater. Lower values are typical for some textured, embossed, or scored patterns; nonwhite units; and those covered with fabric. This lower reflectance is not necessarily significant, however, unless the ceiling is depended upon as a distributor of ambient illumination. Ceiling light reflectance performance is especially important in buildings with substantial levels of indirect lighting, and in building designs incorporating daylighting. Using daylight as a lighting source often requires directing a portion of the daylight toward the ceiling for subsequent re-reflection and diffusion. This strategy may be used to deliver uniform, usable light levels without glare throughout the illuminated space.

3.2 Resistance to humidity varies among acoustical ceiling components. Most regular composition tiles and panels deteriorate when exposed to high humidity or humidity fluctuation. High-density, ceramic ceiling panels are specifically recommended for high-humidity conditions, as are vinyl-film-faced and metal-foil-faced products. Acoustical units designed not to sag in high-temperatures as high as 104 degrees F (40 degrees C), and high-humidity (90% to 100% relative humidity) conditions, are available. Similar care must be exercised when selecting suspension system components for high-humidity areas, including areas such as saunas, shower rooms, indoor swimming pools, and kitchens. Also, to reduce moisture-related problems, make provisions for ventilating the ceiling plenum.

3.3 Installing thermal or acoustical insulation on the back of suspended acoustical panel ceilings is not recommended by manufacturers. Excessive loading caused by added insulation can cause sagging and unsafe installations. Condensation may occur if ceiling insulation places the dew point inside the plenum. Condensation within the plenum can damage both acoustical units and suspension systems. Uncovered mineral-fiber insulation in the plenum may increase particulate counts in air supplies and contribute to poor indoor air quality. If other considerations require that acoustical or thermal insulation be installed on top of the acoustical ceiling, manufacturers may not warrant installations or they may have weight restrictions, requirements for vapor retarders, and other limitations. Because blanket insulation rolls span multiple cross tees and contacts the backs of acoustical units less frequently, rolls are preferred to batts.

END OF SECTION

SECTION 096400

WOOD FLOORING

GENERAL GUIDELINES

1.1 SECTION INCLUDES

A. Qualitative requirements for wood strip flooring and finish.

1.2 QUALITY ASSURANCE

A. Hardwood Flooring: Comply with NOFMA's "Offical Flooring Grading Rules" for species, grade, and cut.

B. Maple Flooring: Comply with applicable MFMA grading rules for species, grade, and cut.

C. Softwood Flooring: Comply with WCLIB No. 17 grading rules for species, grade, and cut.

1.3 WOOD STRIP FLOORING FOR GENERAL USE (STAGE / PLATFORM)

A. Solid-Wood, Strip Flooring.
   1. Species and Grade: Hardwood.
      a. No. 2 common red oak
      b. MFMA-RL Second and Better Grade hard maple
   2. Cut: Plain sawn, quarter/rift sawn, or edge grain
   3. Thickness: 25/32 inch minimum.

B. Solid-Wood Plank Flooring:
   1. Species and Grade: Softwood.
      a. C and better or D – Flooring Douglas Fir
   2. Cut: Plain sawn.
   3. Thickness: 3/4 inch nominal.

C. Field-Applied Finish: Solvent-based, oil-modified, or water-based urethane finish system.

1.4 ACCESSORIES

A. Wood Sleepers and Subfloor.

B. Wood Underlayment.

C. Cork Expansion Strip.

D. Wood Trim.

E. Vented Base.

1.5 PREPARATION

A. Concrete Slabs: Verify that slabs are dry according to test methods recommended by flooring manufacturer or, if none, by test methods in NOFMA's "Installing Hardwood Flooring."

1. When concrete slabs are tested according to ASTM F 1869, Test Method for Measuring Moisture Vapor Emission Rate of Concrete Subfloor Using Anhydrous Calcium Chloride, 4-1/2 pounds of water/1000 sq.ft. of slab in a 24hour period is generally acceptable as a maximum moisture-emission level.

LEED SUGGESTIONS

2.1 LEED for Schools requires that a minimum of 50% of wood-based materials be certified as having been obtained from forests that comply with FSC STD-01-001, FSC Principles and Criteria for Forest Stewardship in order for a project to qualify for Credit MR7.

LESSONS LEARNED

3.1 The Maple Flooring Manufacturers Association (MFMA) has noted that the use of water-based finishes has occasionally produced a side bonding effect, which may result in localized excessive cracks between boards. They recommend consulting an MFMA contractor and the manufacturer to obtain procedures for sealing and finishing maple strip flooring with water-based products.

END OF SECTION

SECTION 096466

WOOD ATHLETIC FLOORING

GENERAL GUIDELINES

1.1 SECTION INCLUDES

A. Qualitative requirements for wood sports-floor assemblies.

1.2 QUALITY ASSURANCE

A. Maple Flooring: NFMA.

1.3 WOOD STRIP FLOORING FOR ATHLETIC APPLICATION

A. Strip Flooring: Northern hard maple, kiln dried, random length, tongue and groove, and end matched.
   1. Grade: MFMA-RL, provide Second and Better Grade or Thirds for areas normally exposed to view in high schools only.
      a. Provide Third Grade for areas under stacked portion of telescoping bleachers and at middle schools.
   2. Cut: Edge or Flat
   3. Thickness: 25/32 inch
   4. Face Width: 2-1/4 inches or 1-1/2 inches
   5. Backs: Channeled (kerfed) for stress relief

B. Installation System: Provide one of the following:
   1. Maple, strip flooring on floating double layer, plywood subfloor.
   2. Maple, strip flooring on floating wood sleepers.
   3. Maple, strip flooring on fixed, wood sleepers and subfloor.

C. Finish: High build gym floor finish and game markings, approved by Maple Flooring Manufacturers Association (MFMA).
   1. Type: MFMA Group 3, Gymnasium Type (Surface) Finishes; urethane-oil type or Group 5, Water Based Finishes; polyurethane
   2. Floor-Sealer Formulation: Pliable, penetrating type
   3. Finish-Coat Formulation: Formulated for gloss finish and multi-coat application
   4. Game-Line and Marker Paint: Industrial enamel compatible with finish coats and recommended in writing by manufacturers of finish coats, and paint for this use.

1.4 AUXILIARY MATERIALS

A. Vented Cove Base: Semi-rigid plastic angle molding.

1.5 PREPARATION

A. Where direct application of wood flooring to concrete substrate is indicated, test for dryness before proceeding with installation. Check levelness of concrete substrate to ensure not more than 1/8 inch deviation in any direction when checked with a 10 foot straight edge. Grind down high spots or fill in low spots to correct improper conditions.

B. Concrete Slabs: Verify that slabs are dry according to test methods recommended by flooring manufacturer or, if none, by test methods in NOFMA's "Installing Hardwood Flooring."

1. When concrete slabs are tested according to ASTM F1869, Test Method for Measuring Moisture Vapor Emission Rate of Concrete Subfloor Using Anhydrous Calcium Chloride, 4-1/2 pounds of water/1000 sq.ft. of slab in a 24 hour period is generally acceptable as a maximum moisture-emission level.

LEED SUGGESTIONS

2.1 VOC restrictions of authorities having jurisdiction may affect the selection of installation adhesives and floor-finish systems. The Section Text places responsibility on the floor covering manufacturers for selecting appropriate adhesives and floor-finish systems for conditions indicated. The Section Text also includes requirements for low-emitting adhesives required for LEED Credit EQ 4.1 and low-emitting finish systems required for LEED Credit EQ 4.2.

2.2 LEED Credit MR 7 requires that a minimum of 50% of wood-based products be from forests certified by an FSC-accredited certification body to comply with FSC 1.2, Principles and Criteria.

LESSONS LEARNED

3.1 The Maple Flooring Manufacturers Association (MFMA) has noted that the use of water-based finishes has occasionally produced a side bonding effect, which may result in localized excessive cracks between boards. They recommend consulting an MFMA contractor and the manufacturer to obtain procedures for sealing and finishing maple strip flooring with water-based products.

END OF SECTION

SECTION 096500

RESILIENT FLOORING

GENERAL GUIDELINES

1.1 SECTION INCLUDES

A. Qualitative requirements for resilient tile flooring, resilient sheet flooring, resilient base, resilient stair treads and risers, resilient stair nosings, resilient edging, and transitions for carpet.

1.2 QUALITY ASSURANCE

A. Fire Test Performance: Unless otherwise indicated, provide flooring material to meet the following fire test performance criteria as tested by a recognized independent testing laboratory.

1. ASTM E 648 (Critical Radiant Flux) of 0.45 watts per sq.cm. or greater, Class I.
2. ASTM E 662 (Smoke Generation) Maximum Specific Optical Density of 450 or less.

B. Provide adequate testing of concrete slabs, including relative humidity testing.

1.3 TILE FLOORING

A. Enhanced Tile: ASTM F 1066, Class II, homogeneous resilient tile, but with superior recovery from long-term indentation. Product shall comply with any of the following: a polymer binder, enhanced vinyl content, polyolefin fiber reinforcement, or polyvinyl esters and inorganic fillers (not including quartz) provide improved permanent indentation resistance. Factory-applied finish shall provide excellent cleaning properties.

1. Physical Properties: product must pass one of the following:

a. Static Load (ASTM F 970): At a static load of 250 pounds, tile shall have a residual indentation of less than 0.005 inch.

b. Indentation (ASTM F 1914): At the end of one minute the indentation must be less than .01 inch.

2. Size

a. 12 inch by 12 inch, minimum.

b. Thickness: 0.120 inch minimum

3. Wearing Surface: Smooth.

4. Finish: Manufacturer's factory applied finish not requiring removal after installation, including but not limited to the following:

a. UV/ceramic technology, Tritonite II.

b. Polyurethane.

c. Acrylic.

B. Rubber Tile: ASTM F 1344, Class 1-A or 1-B, 0.125 inch thick.

C. Solid Vinyl Floor Tile: ASTM F 1700.

1. Thickness: 0.120 inch minimum.

D. Resilient Quartz Tile: ASTM F 1066, Class I, Type A or ASTM F 1700, Class II. Product shall be a combination of vinyl and quartz resulting in a higher static load limit than standard vinyl completion tile. Factory-applied finish shall provide excellent cleaning properties.

1. Physical Properties:
a. Static Load (ASTM F 970): At a static load of 2,000 pounds, tile shall have a residual indentation of less than 0.005 inch.
2. Size
a. 12 inch by 12 inch, minimum.
b. Thickness: 0.080 inch minimum
3. Wearing Surface: Smooth.
4. Finish: Manufacturer's factory-applied finish not requiring removal after installation, including but not limited to the following:
a. UV/ceramic technology, Tritonite II.
b. Polyurethane.
c. Acrylic.

1.4 VINYL SHEET FLOORING
A. Unbacked Sheet Vinyl Floor Covering: ASTM F 1913, 0.080 inch thick.

B. Sheet Vinyl Floor Covering with Backing: ASTM F 1303, 0.080 inch thick.

1.5 RUBBER SHEET FLOORING
A. Provide three-layer construction rubber flooring sheets conforming to ASTM F-1860-98 Standard Specification for Rubber Sheet Flooring and Backing.

B. Sheet Rubber Flooring: ASTM F 1859 Standard Specification for Rubber Sheet Flooring Without Backing.

1.6 RESILIENT BASE AND ACCESSORIES
A. Resilient Base: Rubber wall base 4 or 6 inch height, 0.125 inch thick, complying with ASTM F 1861, Type TS or TP, Group I or II.

B. Resilient Stair Treads, Risers, and Skirtings: Rubber accessories, complying with ASTM F 2169, Type TS or TP, Group II tread with contrasting color for visually impaired.

C. Integral-Flash-Cove-Base Accessories:
1. Cove Strip.
2. Cap Strip.

D. Resilient Molding Accessories.

1.7 INSTALLATION MATERIALS
A. Trowelable Leveling and Patching Compounds.

B. Adhesives.

C. Stair-Tread-Nose Filler.

D. Metal Edge Strips.

E. Floor Polish
1. Acrylic as recommended by membrane manufacturer.
2. Clear topcoat (Aliphatic Polyurethane), non-immersible, high performance, zero VOC, coating.
3. Static Coefficient of Friction – not less than 0.5

1.8 EXAMINATION

A. Concrete Subfloors: Verify that concrete slabs comply with ASTM F 710 and the following:

1. Slab substrates are dry and free of curing compounds, sealers, hardeners, and other materials whose presence would interfere with bonding of adhesive. Determine adhesion and dryness characteristics by performing bond and moisture tests recommended by tile manufacturer.

a. When concrete slabs are tested according to ASTM F 1869, Test Method for Measuring Moisture Vapor Emission Rate of Concrete Subfloor Using Anhydrous Calcium Chloride, 3 pounds of water/1000 sq.ft. of slab in a 24-hour period is generally accepted in the resilient floor covering industry as a safe maximum moisture emission level. Some manufacturer's installation instructions state that up to 5 pounds of water/1000 sq.ft. in 24 hours is acceptable for ***resilient tile flooring***.

1) Alternative testing methods may be used when approved by flooring manufacturer.

2. Subfloors are free of cracks, ridges, depressions, scale, and foreign deposits of any kind.

1.9 Cleaning and Protection

A. Floor Polish:

1. Apply three to five coats with a minimum of 24 hours of drying time between each coat.

2. Coordinate type of polish with Owner's maintenance department.

LEED SUGGESTIONS

2.1 Floor coverings manufactured from post-consumer recycled rubber are available. For products advertised as having recycled content, contact manufacturers to determine the percentages of post-consumer and industrial waste used in manufacturing process.

2.2 When installing adhesives, manufacturers and installers must comply with VOC restrictions of authorities having jurisdiction. However, if the project is requiring a LEED credit for Low-Emitting Materials, the product should also meet the requirements of the California Department of Health Services Standard Practice for the Testing of Volatile Organic Emissions from From Various Sources Using Small-Scale Environmental Chambers, including 2004 Addenda.

LESSONS LEARNED

3.1 Although resilient floor coverings resist moisture, installations can fail if the bond between the floor tile or sheet floor covering and the substrate is weakened or destroyed by moisture on the surface seeping through the joints between units. Heat welding or chemically bonding the seams eliminates these joints. Generally, resilient sheet flooring manufacturers, installers, and end-users prefer the appearance and performance of heat-welded seams over chemically bonded seams. Some sheet manufacturers also offer alternative, proprietary seamless installation techniques. Although sheet products are usually specified for seamless installations, some large-size tiles can be heat welded or chemically bonded. If a seamless installation is required, verify availability and installation methods with manufacturers.

END OF SECTION

SECTION 096516

LINOLEUM FLOORING

GENERAL GUIDELINES

1.1 SECTION INCLUDES

A. Qualitative requirements for linoleum sheet flooring.

1.2 SUBMITTALS

A. Maintenance Procedures: To seal linoleum, manufacturers generally recommend an initial application of floor polish. This floor polish is usually different from the products used with resilient products. To inform the Owner about linoleum's maintenance requirements the specifications need to include a requirement for submitting maintenance data and review maintenance procedures.

1.3 QUALITY ASSURANCE

A. Fire Test Performance: Unless otherwise indicated, provide flooring material to meet the following fire test performance criteria as tested by a recognized independent testing laboratory.
   1. ASTM E 648 (Critical Radiant Flux) of 0.45 watts per sq. cm. or greater, Class I.
   2. ASTM E 662 (Smoke Generation) Maximum Specific Optical Density of 450 or less.

B. ASTM F 2034 "Specification for Sheet Linoleum Floor Covering".

C. Provide adequate testing of concrete slabs, including relative humidity testing.

1.4 LINOLEUM SHEET FLOORING

A. Sheet linoleum flooring complying with ASTM F 2034.

B. Roll Size: Manufacturer's standard length by not less than 78 inches wide.

C. Thickness: 0.10 inch (2.5 mm), minimum.
   1. 0.08 (2.0 mm) is not acceptable.

D. Seams: Heat welded or cold bonded.

1.5 AUXILIARY MATERIALS

A. Heat Welding Bead.

B. Adhesive.

C. Trowelable Underlayments and Patching Compounds.

D. Floor Polish.

1.6 EXAMINATION

A. Concrete Subfloors: Verify that concrete slabs comply with ASTM F 710 and the following:

1. Slab substrates are dry and free of curing compounds, sealers, hardeners, and other materials whose presence would interfere with bonding of adhesive. Determine adhesion and dryness characteristics by performing bond and moisture tests recommended by ***flooring and adhesive*** manufacturer***(s)***. ***Conduct two tests for every 1000 sq. ft. of concrete slab: one for moisture transmission from the surface of the concrete and one for internal relative humidity of the concrete slab.***

a. ***Test concrete slabs*** according to ASTM F 1869, Test Method for Measuring Moisture Vapor Emission Rate of Concrete Subflooring Using Anhydrous Calcium Chloride. 3 pounds of water/1000 sq.ft. of slab in a 24-hour period is generally accepted in the linoleum floor covering industry as a safe maximum moisture emission level***, but must be verified against the flooring and/or adhesive manufacturer's specific requirements for the product to be used.***

b. Test concrete slabs according to ASTM F 2170, Standard Test Method for Determining Relative Humidity in Concrete Floor Slabs Using In-Situ Probes. 75% - 85% internal relative humidity is generally regarded as acceptable, but must be verified against the flooring and/or adhesive manufacturer's specific requirements for the product to be used.

LESSONS LEARNED

2.1 Manufacturers caution against using excessive amounts of liquid during maintenance procedures. Maintenance solutions that are abrasive or that measure more than 10 pH may damage linoleum.

2.2 Products generally have a factory-applied finish that provides temporary protection during installation. After installation, manufacturers typically recommend an initial application of two or three coats of liquid polish to seal the surface. Verify the recommendations of manufacturers for the products selected. Liquid floor polish is generally used for linoleum floor covering applications instead of paste wax.

2.3 Review concrete curing methods specified to confirm that liquid curing compound is dissipating type.

2.4 In renovations require removal of all residual adhesives to clean bare concrete by shot blasting concrete slabs to receive linoleum flooring.

2.5 A below-slab vapor retarder and conditioning the space to its design level for temperature and humidity with the permanent mechanical system prior to moisture testing and flooring installation will provide the best conditions for a successful installation.

END OF SECTION

SECTION 096566

RESILIENT ATHLETIC FLOORING

GENERAL GUIDELINES

1.1 SECTION INCLUDES

A. Qualitative requirements for adhered sheet vinyl athletic flooring and athletic flooring with pad and accessories including game lines.

1.2 SHEET VINYL ATHLETIC FLOORING

A. Materials and Construction: ASTM F 1303, Type I (minimum binder content of 90 percent) requirements, Class C (foamed plastic) backing.

B. Applied Finish: Factory applied UV urethane.

C. Overall Thickness: 0.25 inch, minimum.

D. Seaming Method: Heat welded.

1.3 ACCESSORIES

A. Trowelable Leveling and Patching Compound.

B. Adhesives.

C. Heat Welding Bead.

D. Game Line and Marker Paint.

1.4 EXAMINATION

A. Concrete Substrates: Verify that concrete slabs comply with ASTM F 710 and the following:
   1. Slab substrates are dry and free of curing compounds, sealers, hardeners, and other materials that may interfere with adhesive bond. Determine adhesion and dryness characteristics by performing bond, moisture, and pH tests recommended in writing by flooring manufacturer.
      a. Moisture Content of Slab: 3 pounds per 1,000 sq.ft. or less per RMA test method.

END OF SECTION

THIS PAGE HAS BEEN INTENTIONALLY LEFT BLANK.

SECTION 096723

RESINOUS FLOORING

GENERAL GUIDELINES

1.1 SECTION INCLUDES

A. Resinous flooring system ***with optional cove base***. Applied as a self-leveling slurry with broadcast aggregates.
   1. ***Epoxy body coats***
   2. ***Urethane body coats (kitchen)***

1.2 RESINOUS FLOORING

A. ***Epoxy*** System Components
   1. Body Coat(s)
      a. Epoxy.
      b. Formulation Description: 100 percent solids.
      c. Application Method: Self leveling slurry with broadcast aggregates.
         1) Thickness: 3/16 inch minimum.
      d. Aggregates: Colored quartz (ceramic coated silica) or vinyl flakes.

B. ***Urethane System Components (Kitchen)***
   1. Body Coast(s)
      a. ***Resin: Urethane***
      b. ***Formulation Description: Water-based***
      c. ***Application Method: Self-leveling slurry with broadcast aggregates.***
         1) Thickness: 1/4 inch, minimum.
      d. ***Aggregates: Natural silica.***

C. Topcoat (Optional): UV-resistant sealing or finish coat(s).
   1. Resin: Urethane.
   2. Formulation Description: 100 percent solids.
   3. Type: Clear.

D. Accessories
   1. Primer.
   2. Waterproof Membrane.
   3. Reinforcing Membrane.
   4. Patching and Fill Material.

E. System Physical Properties: Provide resinous flooring system with the following minimum physical property requirements when tested according to test methods indicated:
   1. Compressive Strength (ASTM C579): 6,000 psi.
   2. Tensile Strength (ASTM C307): 1,500 psi.
   3. Water Absorption (ASTM C413): 1.0 percent maximum.
   4. Coefficient of Thermal Expansion (ASTM C531): 0.00004 inch per inch times deg. F.
   5. Abrasion Resistance (ASTM D4060): 0.023 gram loss.
   6. Tensile Elongation Percent (ASTM D638): 2-4.

1.3 EXAMINATION

A. Concrete Substrates: Verify that concrete slabs comply with ASTM F 710 and the following:

1. Slab substrates are dry and free of curing compounds, sealers, hardeners, and other materials that may interfere with adhesive bond. Determine adhesion and dryness characteristics by performing bond, moisture, and pH tests recommended in writing by flooring manufacturer.

a. Moisture Content of Slab: 3 pounds per 1,000 sq.ft. or less per RMA test method.

END OF SECTION

SECTION 096766

FLUID-APPLIED ATHLETIC FLOORING

GENERAL GUIDELINES

1.1 SECTION INCLUDES

A. Qualitative requirements for fluid-applied athletic flooring with pad and accessories including game lines.

1.2 FLUID-APPLIED ATHLETIC FLOORING

A. Polyurethane Flooring over Resilient, Base Mat (PFR)
   1. Resilient, Base Mat: Manufacturer's standard base-mat underlayment of granulated rubber in polyurethane binder.
      a. Thickness: 5/32 inch, minimum
   2. Base-Mat Adhesive: Manufacturer's standard two-component polyurethane.
   3. Base-Mat Sealer: Manufacturer's standard two-component polyurethane compound formulated for sealing base mat.
   4. Elastomeric Resin: Two-component, solid, self-leveling, pigmented, zero-mercury polyurethane containing no rubber fillers.

1.3 ACCESSORIES

A. Trowelable Leveling and Patching Compound.

B. Adhesives.

C. Heat Welding Bead.

D. Game Line and Marker Paint.

1.4 EXAMINATION

A. Concrete Substrates: Verify that concrete slabs comply with ASTM F 710 and the following:
   1. Slab substrates are dry and free of curing compounds, sealers, hardeners, and other materials that may interfere with adhesive bond. Determine adhesion and dryness characteristics by performing bond, moisture, and pH tests recommended in writing by flooring manufacturer.
      a. Moisture Content of Slab: 3 pounds per 1,000 sq.ft. or less per RMA test method.

END OF SECTION

SECTION 096813

TILE CARPETING

GENERAL GUIDELINES

1.1 SECTION INCLUDES

A. Qualitative requirements for tile carpeting.

1.2 QUALITY ASSURANCE

A. Carpet shall comply with requirements of the CRI's "Green Label Plus" Indoor Air Quality Testing Program.

1.3 PROJECT CONDITIONS

A. Concrete subfloors must meet the following requirements before carpet may be installed:
1. pH range of 5 to 9
2. Moisture-emission rate of 3 lb/1000 sq.ft. per 24 hours or less.

1.4 WARRANTY

A. Carpet Tile: 10 years (minimum).

(continued on next page)

1.5 MATERIALS

A. Carpet Tile

SCHOOL CARPET MINIMUM AVERAGE SPECIFICATIONS		
Carpet Property/Characteristic	**Minimum Specifications**	**Test Method**
Type Yard	Solution or Yarn Dyed	--
Color	Multi-Colored Products (select colors complimentary to soil type/color in region)	--
Surface/Style	Level Loop, Multi-Level Loop, Textured Loop, or Cut & Loop	--
Static	3.5kv (max – not to exceed)	AATCC-134 Step Method
Indoor Air Quality (IAQ)	CRI IAQ Certification "Green Label Plus"	CRI Test Program ASTM D-5116
In glue-down installation, include CRI IAQ Testing Program label for installation adhesives. Carpet over cushion, include CRI IAQ Testing Program label for carpet cushion.		
Flammability – Radiant Panel Test	Class I	ASTM E-648
NBS Smoke	<450 Flaming Mode	ASTM E-662
Tuft Bind (dry)	8 lbs, all products (16-20 lbs suggested for unitary backing)	ASTM D-1335
Delamination	Secondary backed products, 3.5 lbs	ASTM D-3936
Dimensional Stability	Removable modular products, 0.2% or less	ISO 2551
Colorfastness: light	4 or better (60 AFU 3 cycles)	AATCC 16-E
Colorfastness: ozone	4 or better after 2 cycles	AATCC 129
Colorfastness: crocking	4 or better (wet & dry)	AATCC 165
Colorfastness: water	4 or better, AATCC Transference Scale (only yarn dyed carpet) (grade change in color and staining)	AATCC 107
Soil Resistant Treatment	Minimum average of 350 ppm fluorine on pile fiber of 3 separate tests	CRI TM-102

1.6 INSTALLATION

A. Installation Method: Glue down with releasable adhesive or partial glue down with releasable adhesive.

LEED SUGGESTIONS

2.1 LEED credit for Indoor Environmental Quality (low-emitting materials) requires that carpet tile and installation adhesive meet or exceed the requirements for the Carpet and Rug Institute's (CRI) "Green Label Plus" program. ***LEED-for-Schools 2009 IEQc4.1 and IEQc4.3 can be satisfied by LEED NC 2009 EQc4.1 and EQc4.2. For LEED-NC 2009 EQc4.1 and EQc4.3, carpet adhesive only needs to satisfy Green Label requirements and not Green Label Plus.***

2.2 Compared with broadloom carpet, carpet tiles may have some unique advantages for environmental considerations. Expectations for a high-quality life-cycle for most carpet tiles and capabilities for spot or area replacement, flexibility, and access may be factors to consider. Carpet tiles can be spot glued effectively, reducing adhesive use without diminishing the quality of a commercial carpet tile installation. They are easier to transport, store, and handle compared to broadloom, which makes carpet tiles a more likely applicant for alternatives to land-fill disposal.

A. If carpet is being removed, contact carpet suppliers for carpet recycling programs.

END OF SECTION

SECTION 096816
SHEET CARPETING

GENERAL GUIDELINES

1.1 SECTION INCLUDES

A. Qualitative requirements for carpet materials and accessories for a direct-glue down or pre-applied adhesive installation of one of the following:.

1. Tufted Broadloom
2. Variable Cushion Tufted Textile (VCTT)

1.2 QUALITY ASSURANCE

A. Chemical Emission/Indoor Air Quality: All carpet specified must be in compliance with the Carpet and Rug Institute (CRI) "Green Label Plus" Indoor Air Quality Carpet Testing Program. The program label and registration number serve as evidence of compliance.

1.3 PROJECT CONDITIONS

A. Concrete subfloors must meet the following requirements before carpet may be installed:

1. pH range of 5 to 9.
2. Moisture-emission rate of 3 lb/1000 sq.ft. per 24 hours or less.

1.4 WARRANTY

A. Tufted Broadloom: 10 years (minimum).
B. Variable Cushion Tufted Textile: 15 years (minimum)

1.5 CARPET

A. Carpet, Tufted Broadloom: Shall meet or exceed the following CRI guidelines:

SCHOOL CARPET MINIMUM AVERAGE SPECIFICATIONS		
Carpet Property/Characteristic	**Minimum Specifications**	**Test Method**
Type Yard	Solution or Yarn Dyed	--
Color	Multi-Colored Products (select colors complimentary to soil type/color in region)	--
Surface/Style	Level Loop, Multi-Level Loop, Textured Loop, or Cut & Loop	--
Static	3.5 kv (max – not to exceed)	AATCC-134 Step Method
Indoor Air Quality (IAQ)	CRI IAQ Certification "Green Label Plus"	CRI Test Program ASTM D-5116
In glue-down installation, include CRI IAQ Testing Program label for installation adhesives. Carpet over cushion, include CRI IAQ Testing Program label for carpet cushion.		
Flammability – Radiant Panel Test	Class I	ASTM E-648
NBS Smoke	<450 Flaming Mode	ASTM E-662
Tuft Bind (dry)	8 lbs, all products (16-20 lbs suggested for unitary backing)	ASTM D-1335
Delamination	Secondary backed products, 3.5 lbs	ASTM D-3936
Dimensional Stability	Removable modular products, 0.2% or less	ISO 2551
Colorfastness: light	4 or better (60 AFU 3 cycles)	AATCC 16-E
Colorfastness: ozone	4 or better after 2 cycles	AATCC 129
Colorfastness: crocking	4 or better (wet & dry)	AATCC 165
Colorfastness: water	4 or better, AATCC Transference Scale (only yarn dyed carpet) (grade change in color and staining)	AATCC 107
Soil Resistant Treatment	Minimum average of 350 ppm fluorine on pile fiber of 3 separate tests	CRI TM-102

B. Carpet, Variable Cushion Tufted Textile (VCTT): Shall meet or exceed the following guidelines:

B. Carpet, Variable Cushion Tufted Textile (VCTT): Shall meet or exceed the following guidelines:

SCHOOL VCTT MINIMUM AVERAGE SPECIFICATIONS		
Carpet Property/Characteristic	**Minimum Specifications**	**Test Method**
Type Yard	Solution or Yarn Dyed	--
Color	Multi-Colored Products (select colors complimentary to soil type/color in region)	--
Surface/Style	Level Loop, Textured Loop	--
Static	3.0 kv (max – not to exceed)	AATCC-134 Step Method
Indoor Air Quality (IAQ)	CRI IAQ Certification "Green Label Plus"	CRI Test Program ASTM D-5116
In glue-down installation, include CRI IAQ Testing Program label for installation adhesives. Carpet over cushion, include CRI IAQ Testing Program label for carpet cushion.		
Flammability – Radiant Panel Test	Class I	ASTM E-648
NBS Smoke	<450 Flaming Mode	ASTM E-662
Tuft Bind (wet or dry)	11 lbs, all products	ASTM D-1335
Delamination	No delamination	ASTM D-3936
Colorfastness: light	4 or better (60 AFU 3 cycles)	AATCC 16-E
Colorfastness: ozone	4 or better after 2 cycles	AATCC 129
Colorfastness: crocking	4 or better (wet & dry)	AATCC 165
Colorfastness: water	4 or better, AATCC Transference Scale (only yarn dyed carpet) (grade change in color and staining)	AATCC 107
Backing	• Thermoplastic vinyl composite • Fully fused to provide for no delamination • Closed cell, vinyl backing • Backing system to provide a barrier to moisture penetration • Product to provide for chemically welded seam	--

1.6 AUXILIARY MATERIALS

A. Vinyl or rubber edge guard between carpet and sealed concrete.

B. Vinyl or rubber reducer strip between carpet and resilient flooring.

1.7 INSTALLATION

A. Comply with CRI 104, Section 9: "Direct Glue Down" or Pre-applied Adhesive Installation, Section 11.4 (Peel and Stick).

B. VCTT: Chemically weld seams.

LEED SUGGESTIONS

2.1 LEED Credit for Indoor Environmental Air Quality (low-emitting materials) requires that carpet tile and installation adhesive meet or exceed the requirements for the Carpet and Rug Institute's (CRI) "Green Label Plus" Program. ***LEED-for-Schools 2009 IEQc4.1 and IEQc4.3 can be satisfied by LEED NC 2009 EQc4.1 and EQc4.2. For LEED-NC 2009 EQc4.1 and EQc4.3, carpet adhesive only needs to satisfy Green Label requirements and not Green Label Plus.***

END OF SECTION

SECTION 096900

ACCESS FLOORING

GENERAL GUIDELINES

1.1 SECTION INCLUDES
- A. Qualitative requirements for access flooring panels and understructure.

1.2 PERFORMANCE REQUIREMENTS
- A. CISCA A/F, "Recommended Test Procedures for Access Floors"
  - 1. Concentrated Loads: Provide floor panels, including those with cutouts, capable of withstanding a concentrated design load of 1000 lbf, with a top-surface deflection under load and a permanent set not to exceed, respectively, 0.080 inch and 0.010 inch according to CISCA A/F, Section I, "Concentrated Loads".
  - 2. Ultimate Loads: Provide access flooring systems capable of withstanding a minimum ultimate concentrated load of 2500 lbf without failing, according to CISCA A/F, Section II, "Ultimate Loading".
  - 3. CISCA A/F Wheel 2 Rolling Load: 500 lbf.
  - 4. Pedestal Axial-Load Performance: Provide pedestal assemblies, without panels or other supports in place, capable of withstanding a 5000 lbf axial load per pedestal, according to CISCA A/F, Section V, "Pedestal Axial Load Test".

1.3 FLOOR PANELS AND UNDERSTRUCTURE
- A. Floor Panels, General: Provide modular panels complying with the following requirements that one person, using a portable lifting device, can interchange with other field panels without disturbing adjacent panels or understructure.
  - 1. Panel Attachment to Understructure: By gravity for main field areas bolted of pedestal may be necessary at perimeters and high-traffic areas.

- B. Formed-Steel Panels
  - 1. Solid.
  - 2. Grates With or Without Dampers.
  - 3. Perforated With or Without Dampers.

- C. Pedestals: Assembly consisting of base, column with provisions for height adjustment, and head (cap); made of steel or aluminum or a combination of both.

- D. Floor Panel Coverings
  - 1. Solid Vinyl Tile: Static dissipative.
  - 2. Carpet: Antistatic modular, adhesively bonded.

1.4 ACCESSORIES
- A. Cutouts.
- B. Service Outlets.
- C. Diffusers.
- D. Cavity Dividers.
- E. Vertical Closures.
- F. Ramps.
- G. Railings.

END OF SECTION

SECTION 098000

ACOUSTIC TREATMENT

GENERAL GUIDELINES

1.1 SECTION INCLUDES

A. Qualitative requirements for sound absorbing wall units and mounting accessories, and acoustical sound absorbing and diffusing units.

1.2 QUALITY ASSURANCE

A. Fire Test Response Characteristics
1. Flame Spread: 25 or less.
2. Smoke Developed: 450 or less.

1.3 MATERIALS

A. Core Materials: Glass-fiber board; mineral-fiber board; tackable, impact-resistant, high-density face layer; or impact-resistant, acoustically transparent, copolymer face-sheet layer for high-abuse applications.

B. Spline-Mounted Acoustical Wall Panels with Perforated Mineral-Fiber Board Core
1. Facing Material: Woven polyester, nonwoven polyester, polyolefin, or acoustically transparent vinyl fabric.
2. Nominal Panel Thickness: 3/4 inch minimum.
3. NRC: NRC 0.50 to NRC 0.90.

C. Spline-Mounted Acoustical Wall Panels with Glass-Fiber Board Core
1. Facing Material: Woven polyester, nonwoven polyester, polyolefin, or acoustically transparent vinyl fabric.
2. Nominal Panel Thickness: 3/4 inch minimum.
3. Noise Reduction Coefficient: NRC 0.20 minimum.

D. Back-Mounted Acoustical Wall Panels with Perforated Mineral-Fiber Board Core
1. Facing Material: Woven polyester, nonwoven polyester, polyolefin, or acoustically transparent vinyl fabric.
2. Nominal Core Thickness and System NRC: 1/2 inch and not less than NRC 0.35

E. Back-Mounted, Edge-Reinforced Acoustical Wall Panels with Glass-Fiber Board Core
1. Facing Material: Woven polyester, nonwoven polyester, polyolefin, or acoustically transparent vinyl fabric.
2. Nominal Core Thickness and System NRC: 3/4 inch and not less than NRC 0.65

F. Abuse-Resistant Acoustical Panels, General
   1. Flame spread of panels shall be 25 or less under the ASTM E 84.
   2. Panels are Class A.
   3. Panels shall consist of wood fibers and a hydraulic cement binder formed under controlled conditions of heat and pressure.
   4. Prime Painted Panels

G. Wall Sound Diffusers
   1. Standard barrel shaped units with the following properties:
      a. WDS, Low Frequency Absorption: Glass fiber mat core laminated with 1.5 inches, 1.5 pcf sound absorbing glass matting; NRC 0.30 – 0.40.

H. Back-Mounting Devices: Adhesive, hook-and-loop tape, impaling chips, or metal "Z" clips.

1.4 ACOUSTICAL CEILING PANELS

A. Acoustical Baffles
   1. Polyester, polyvinyl, or nylon fabric- wrapped panels, with core of 6 to 7 pcf fiberglass; seamless and bonded to panels

B. Ceiling-Mounted Diffusers
   1. Manufacturer's standard asymmetric pyramidal units with properties as follows:
      a. CD – Standard: Glass fiber mat core laminated with fire retardant resin; NRC 0.12 – 0.17.
      b. CDA – Low Frequency Absorption: Glass fiber mat core laminated with 1.5 inches, 1.5 pcf sound absorbing glass matting; NRC 0.30-0.40.
      c. CDL – Sound Reflective: Glass fiber mat core lined with resin hardener; NRC 0.03 – 0.08.

C. Ceiling-Mounted Reflectors
   1. Manufacturer's standard panels for ceiling suspension, designed to reflect sound energy, and with properties as follows:
      a. CR – Standard: Glass fiber mat core laminated with fire-retardant resin; NRC 0.15-0.25.
      b. CRA - Low Frequency Absorption: Glass fiber mat core laminated with 1.5 inches, 1.5 pcf sound absorbing glass matting; NRC 0.30-0.40.
      c. CRL – Sound Reflective: Glass fiber mat core lined with resin hardener; NRC 0.03 – 0.08.

<u>LEED SUGGESTIONS</u>

2.1 LEED for Schools includes a prerequisite for "Minimum Acoustical Performance". By using sound absorptive panels, both background noise and sound transmission can be decreased, thus assisting in compliance with the "Minimum Acoustical Performance".

END OF SECTION

SECTION 099100
PAINTING

GENERAL GUIDELINES

1.1 SECTION INCLUDES

A. Qualitative requirements for exterior and interior painting with opaque finishes, including painted mechanical and electrical identification, primers, sealers, and finish paints.

1.2 SYSTEM DESCRIPTION

A. To establish a level of quality, the guide references the Master Painters Institutes (MPI) categories. The MPI categories listed are to assist in providing general guidelines for paint type selection. Use of MPI's "Approved Product List" is optional.

B. All materials used shall be lead and mercury free and VOC compliant with local authorities with jurisdiction.

1.3 EXTERIOR PAINTING SCHEDULE

A. Concrete, Stucco, and Masonry (Other Than Concrete Masonry Units) (Satin): (Latex System). Similar to MPI EXT 3.1A.

B. Concrete Masonry Units: (Latex System), similar to MPI EXT 4.2A.

C. Metal - Ferrous: (Latex System), similar to MPI EXT 5.1M.

D. Metal - Galvanized: (Latex System), similar to MPI EXT 5.3A.

E. Metal - Heat Resistant: (Maximum Temperature 1,000 degrees F.), similar to MPI #21.

1.4 INTERIOR PAINTING SCHEDULE

A. Concrete Surfaces: (Latex), similar to MPI INT 3.1M.

B. Concrete Masonry Surfaces, similar to MPI INT 4.2E.

C. Metal - Ferrous: (Latex System), similar to MPI INT 5.1S.

D. Metal - Ferrous: (Dry-Fall System), similar to MPI INT 5.1CC.

E. Metal - Galvanized: (Latex System), similar to MPI INT 5.3N.

F. Metal - Galvanized: (Dry Fall System), similar to MPI INT 5.3H.

G. Wood - Painted: (Latex System), similar to MPI INT 6.3V.

H. Gypsum Board: (Latex System), similar to MPI INT 9.2M.

I. Plaster Surfaces: (Latex System), similar to MPI INT 9.2M.

LEED SUGGESTIONS

2.1 As of July 7, 2008, the USGBC allows for Performance/Intent Equivalent Alternate Compliance Paths for obtaining Low-Emitting Materials Credit EQ 4. LEED for Schools Project Teams may substitute LEED for New Construction v2.2 EQc4 Low-Emitting Materials credits in place of corresponding LEED for Schools EQc4 Low-Emitting Materials credits.

END OF SECTION

SECTION 099300

STAINING AND TRANSPARENT FINISHING

GENERAL GUIDELINES

1.1 SECTION INCLUDES

A. Qualitative requirements for exterior and interior painting with transparent and semi-transparent finishes.

1.2 SYSTEM DESCRIPTION

A. To establish a level of quality, the guide references the Master Painters Institute's (MPI) categories. The MPI categories listed are to assist in providing general guidelines for paint type selection. Use of MPI's "Approved Product List" is optional.

1.3 EXTERIOR STAIN SCHEDULE

A. Wood trim, provide one of the following:
   1. Semi-transparent, oil or alkyd resin base stain, 2 coats, similar to MPI EXT 6.D.
   2. Solid color, oil or alkyd resin base wood stain, 2 coats, similar to MPI EXT 6.3C.

1.4 INTERIOR STAIN SCHEDULE

A. Wood Trim
   1. Polyurethane varnish finish: 2 finish coats of polyurethane varnish over clear sanding sealer and an optional oil stain, similar to MPI INT 6.1J.
      a. Provide wood filler on open grain wood before applying first varnish coat.

END OF SECTION

SECTION 099419

MULTICOLORED COATING SYSTEM

GENERAL GUIDELINES

1.1 SECTION INCLUDES

A. Qualitative requirements for interior multi-colored coating system for high traffic areas.

1.2 QUALITY ASSURANCE

A. Fire-Performance Characteristics: Provide coatings with the following surface-burning characteristics as determined by testing identical products per ASTM E84 by UL or other testing and inspecting agencies acceptable to authorities having jurisdiction. Identify coatings with appropriate markings of applicable testing and inspecting agency.
   1. Flame Spread: 25 or less.
   2. Smoke Developed: 450 or less.

B. Owner Training: Applicator must provide adequate training of Owner's personnel in repair procedures, along with verification that proper equipment is available to Owner's personnel.

C. To establish a level of quality, the guide references the Master Painters Institutes (MPI) categories. The MPI categories listed are to assist in providing general guidelines for paint type selection. Use of MPI's "Approved Product List" is optional.

1.3 INTERIOR PAINTING SCHEDULE

A. Concrete, similar to MPI #112.
   1. Prime Coat: Latex primer sealer
   2. Finish Coat: Multi-color as recommended by manufacturer
   3. Surfaces: Concrete walls and ceiling

B. Concrete Masonry Surfaces, similar to MPI #112.
   1. Concrete masonry block filler
   2. Prime Coat: Latex primer sealer
   3. Finish Coat: Multicolored as recommended by manufacturer

END OF SECTION

SECTION 099600

HIGH PERFORMANCE COATINGS

GENERAL GUIDELINES

1.1 SECTION INCLUDES

A. Surface preparation and application of high-performance coating systems.

1.2 QUALITY ASSURANCE

A. Quality Standards: "MPI Approved Products List" and "MPI Architectural Painting Specifications Manual."

1.3 MATERIALS

A. Undercoats
1. Block Fillers.
2. Interior Primers/Sealers.
3. Metal Primers.
4. Wood Stains.

B. Topcoats
1. Water-Based, Light-Industrial Coatings.
2. Epoxy Coatings.
3. Polyurethane Coatings.
4. Interior High-Performance Architectural Latex Coatings.

1.4 INTERIOR PAINTING SCHEDULE

A. Concrete Surfaces (Gloss): (Water Based Epoxy System), similar to MPI INT 4.1G.
1. Primer: Latex Wall Primer, 1.0 - 1.2 mils DFT/coat.
2. Finish Coats: Water Based Catalyzed Epoxy (Gloss) (55-75 units at 60 degrees F.), 2.5 - 3.0 mils DFT/coat.
3. Surfaces: Floors, stairs, striping on floors.

B. Gypsum Board (Semi-Gloss): (Water Based Epoxy System), similar to MPI INT 9.2F.
1. Primer: Vinyl Acrylic Latex, 1.1 mils DFT/coat.
2. Finish Coats: Water Based Catalyzed Epoxy, Semi-Gloss (20-30 units at 60 degrees F.), 2.5 - 3.0 mils DFT/coat.
3. Surfaces: Gypsum walls, ceiling, bulkheads, graphics.

END OF SECTION

10 DIVISION

SPECIALTIES

TABLE OF CONTENTS

DIVISION 10: SPECIALTIES

101100	Visual Display Surfaces
101200	Display Cases
101400	Signage
101426	Post and Panel / Pylon Signage
101453	Traffic Signage
102113	Toilet Compartments
102123	Cubicles
102213	Wire Mesh Partitions
102226	Operable Partitions
102813	Toilet Accessories
104400	Fire Protection Specialties
105113	Lockers
105613	Metal Storage Shelving
105626	Mobile Storage Shelving
107500	Flagpoles

SECTION 101100

VISUAL DISPLAY SURFACES

GENERAL GUIDELINES

1.1 SECTION INCLUDES

A. Qualitative requirements for markerboards and visual aid boards, framing systems, and accessories.

1.2 MARKERBOARDS

A. ***Porcelain Enamel*** Face Sheet.

B. Core: 3/8 inch thick particleboard.

C. Backing: .005 inch thick aluminum foil.

D. Trim: Anodized extruded aluminum with tray and 1 inch map rail with natural cork insert.

E. Trim: Factory applied anodized extruded aluminum.
1. ***Marker*** tray: Box type.
2. Map Rail: 1 inch display rail with cork insert and a map hook and clips for every 48 inches of map rail and fraction thereof.

1.3 TACK ASSEMBLIES

A. Material, provide one of the following:
1. Natural cork.
2. Plastic impregnated cork sheet.
3. Vinyl fabric faced industrial fiberboard.

B. Trim: Factory-applied anodized extruded aluminum.

1.4 PEGBOARDS

A. Material: Tempered hardboard with holes punched on one inch centers.

1.5 VISUAL DISPLAY RAILS

A. Cork, Vinyl-Fabric, or Polyester-Fabric Faced Visual Display Device.

1.6 SUPPORT SYSTEM (optional)

A. Support System for Visual Display Boards: Rail or modular supports.

1.7 SLIDING VISUAL DISPLAY UNITS

A. Horizontal-Sliding Units.

1.8 ACCESSORIES

A. Provide the following accessories for each individual chalkboard and markerboard unit:
   1. 2 map rail ends.
   2. 1 flag holder (one per room).
   3. Special-purpose graphics.

END OF SECTION

SECTION 101200

DISPLAY CASES

GENERAL ***GUIDELINES***

1.1 SECTION INCLUDES

A. Qualitative requirements for an illuminated display case with its accessories.

1.2 QUALITY ASSURANCE

A. Composite wood products made without urea formaldehyde.

1.3 PRODUCTS

A. Bulletin Boards
- ***1. Cabinet: Aluminum or wood framed.***
- ***2. Glazed Doors: Sliding or hinged.***
- ***3. Illumination System: (optional).***
- ***4. Tack Surface: Natural cork, plastic-impregnated-cork, vinyl-fabric-faced, or polyester-fabric-faced tackboard assembly.***
- ***5. Mounting: Surface mounted or recessed.***

B. Display Cases
- ***1. Recessed Cabinets: Extruded aluminum or hardwood-veneer-plywood box.***
  - ***a. Cabinet Frame and Trim: Aluminum or hardwood species.***
- ***2. Surface-Mounted Cabinets: Extruded-aluminum or hardwood-veneer-plywood box.***
  - ***a. Cabinet Frame and Trim: Aluminum or hardwood species.***
- ***3. Glazed Doors: Sliding or hinged.***
- ***4. Adjustable Tempered-Glass Shelves.***
- ***5. Tack Surface: Natural cork, plastic-impregnated-cork, vinyl-fabric-faced, or polyester-fabric-faced tack assembly.***
- ***6. Illumination System: (optional).***

END OF SECTION

SECTION 101400

SIGNAGE

GENERAL ***GUIDELINES***

1.1 SECTION INCLUDES

A. Qualitative requirements for directional items, letters, signage, and plaques used in establishing identity, communication, or way finding.

1.2 QUALITY ASSURANCE

A. Comply with signage requirements indicated in the Americans with Disabilities Act.

1.3 PANEL SIGNS

A. Type: Unframed.

B. Material: ***Zinc, laminated polycarbonate-faced sheet; acrylic sheet; high pressure decorative laminate, photopolymer sheet; laminated, engraved sheet; laminated, etched photopolymer sheet with raised graphics and Braille; or laminated, sandblasted polymer sheet with raised graphics and Braille.***

C. Copy: Raised text, Braille and pictograms.

1.4 PLAQUES

A. Plaques.
1. Metal: Bronze.
2. Border Style: Plain bevel.
3. Background Texture: Manufacturer's standard pebble texture.
4. Background Finish: Provide dark statuary finish to comply with the requirement specified for bronze finishes, except provide background texture specified above in lieu of mechanical finish indicated.

1.5 DIMENSIONAL CHARACTERS

A. Cast Characters.
B. Aluminum Extrusions.
C. Fabricated Channel Characters.
D. Molded Plastic Characters.
E. Cutout Characters.

1.6 INSTALLATION

A. Wall-Mounted Signs: Mechanical fasteners.
1. Mounted on glass with matching opaque plate on opposite side of glass.

B. Dimensional Characters: Flush or projected mount.

C. Cast-Metal Plaques: Concealed or face mounting.

DEDICATION PLAQUE

John Smith Elementary School

Lincoln Logs Local School District

1

(Date)

(Name), Board President

(Name), Board Member
(Name), Board Member

(Name), Board Member
(Name), Board Member

2

(Name), Superintendent
(Firm Name), Architect

(Name), Treasurer
(Firm Name), Construction Manager

(Other Contractors)

Funded through a partnership with the

3

OHIO SCHOOL FACILITIES COMMISSION

John Kasich, Governor

Richard Hickman, Executive Director

Elements

Group 1: Name of School, Name of District, and OSFC Seal. **Use of the Seal is mandatory. A copy is available from the OSFC.**

Group 2: Date of Dedication, District Officials (including Board Members and Administrators), Architectural firm, and Construction Management firm. Contractors may be included as the Board of Education deems appropriate.

Group 3: State of Ohio participation. Wording should be consistent with above. Placement of Group 3 may be above Group 2 at option of the District.

END OF SECTION

SECTION 101426

POST AND PANEL / PYLON SIGNAGE

GENERAL GUIDELINES

1.1 SECTION INCLUDES

A. Qualitative requirements for non-illuminated post and panel signs.

1.2 QUALITY ASSURANCE

A. Regulatory Requirements: Comply with applicable provisions in ADA-ABA Accessibility Guidelines and ICC A117.1.

1.3 WARRANTY

A. Materials and Workmanship: 5 years.

1.4 PRODUCTS

A. Panel Signs
1. Message Panel Sign Materials: Aluminum sheet or composite aluminum-faced sheet.
a. Edge Condition: Square cut or bullnose.
b. Corner Condition: Square or rounded to radius indicated.
2. Panel Sign Frames: Extruded aluminum mitered with concealed anchors and welded.
a. Profile: Square or rounded.
b. Corner Condition: Square or rounded to radius indicated.
c. Frame Type: Mounted on posts.
3. Hollow-Box-Type Panel Signs
a. Message Panel Material: Aluminum sheet or composite aluminum-faced panel.
b. Corner Condition: Square or rounded to radius indicated.

B. Posts
1. Aluminum: Square, rectangular, semicircular, or rounded-end.

END OF SECTION

SECTION 101453

TRAFFIC SIGNAGE

GENERAL ***GUIDELINES***

1.1 SECTION INCLUDES

A. Qualitative requirements for traffic signs.

1.2 QUALITY ASSURANCE

A. Comply with US Manual on Uniform Traffic Control Devices for signs within public rights-of-way.

1.3 POST-MOUNTED SIGNS

A. Exterior "Accessible Parking" Signs
   1. 12 by 18 inch, 18 gauge steel with 1 inch radius corners. Bolt through top and bottom of sign face into 2 by 2 inch square steel post by 11 foot long (3.65 pounds/feet) with vandal-resistant fasteners.
   2. Finish: Baked enamel finish. Color of sign face is to be blue with white graphics. Color of post is to be selected by the Design Professional.

B. Stop and other traffic regulatory signs.

C. Visitor parking signs.

D. Breakaway post supports for signs within the rights-of-way.

END OF SECTION

SECTION 102113

TOILET COMPARTMENTS

GENERAL ***GUIDELINES***

1.1 SECTION INCLUDES

A. Qualitative requirements for compartments and cubicles appropriate for toilet rooms, including hardware and accessories.

1.2 QUALITY ASSURANCE

A. Flame-Spread Index: 75 or less.

1.3 COMPONENTS

A. Phenolic-Panel Core: Dark color or through-color matching face sheet.

B. Solid-Polymer Units: Either high-density polyethylene (HDPE) or polypropylene (PP) panel material.

C. Solid Color Reinforced Composite.

D. Brackets (fittings)
- ***1. Stirrup Type: Stainless steel.***
- ***2. Full-Height (continuous) Type: Stainless steel or polymer.***

E. Hardware and Accessories: Clear-anodized aluminum or stainless steel.
- ***1. Fasteners: Stainless steel.***
- ***2. Shoes: Stainless steel or polymer.***
- ***3. Hinges: Self-closing.***
- ***4. Latch and Keeper: Emergency access and accessibility requirements.***

1.4 INSTALLATION

A. General: Install panels with either three stirrup brackets or continuous type.

B. Install with vandal-resistant fasteners.

END OF SECTION

SECTION 102123

CUBICLES

GENERAL GUIDELINES

1.1 SECTION INCLUDES

A. Qualitative requirements for medical treatment curtains, tracks, and other hardware.

1.2 MATERIALS

A. Curtains
1. Curtain Fabric: 100 percent polyester, flame-resistant.
2. Mesh Top: No. 50.
3. Curtain Drop: Beaded chain.

B. Curtain Tracks: ***Surface-mounted, aluminum box channel type.***

C. Curtain Carriers: One piece nylon, breakaway.

END OF SECTION

SECTION 102213

WIRE MESH PARTITIONS

GENERAL ***GUIDELINES***

1.1 SECTION INCLUDES

A. Qualitative requirements for fixed partitions used as enclosures, dividers, partitions, ***storage lockers, and equipment barriers*** fabricated of wire mesh.

1.2 STANDARD-DUTY WIRE MESH PARTITIONS

A. Wire Mesh: 0.135 steel woven wire, 1-1/2 inch diamond mesh or 1 by 2 inch rectangular.
   1. Doors: Swinging, swinging dutch, or sliding.
   2. Service Windows.
   3. Accessories
      a. Sheet Metal Base.
      b. Adjustable Filler Panels.
      c. Wall Clips.
   4. Finishes: Shop primed, baked enamel, or powder coated.

B. Framing: Cold rolled “C” section channels and angles.

END OF SECTION

SECTION 102226

OPERABLE PARTITIONS

GENERAL GUIDELINES

1.1 SECTION INCLUDES

A. Qualitative requirements for track supported, operable panels and partitions, top hung and floor supported, manually operated.

1.2 SYSTEM DESCRIPTION

A. Sound Transmission Class: 50 minimum or as determined for compliance with LEED for Schools, Indoor Environmental Air Quality, “Minimum Acoustical Performance”, prerequisite 3.

B. Flame-Spread Index: 25 or less.

1.3 OPERABLE ACOUSTICAL PANELS

A. Panel Types
1. Manually operated, individual or paired acoustical panel partitions.
2. Electrically operated, continuously hinged acoustical panel partitions.
3. Manually operated, individual or paired glass panel partitions.

B. Operation: Manual, unless otherwise noted.

C. Frame: Steel or aluminum.

D. Face/Liner Sheets: Steel or steel with gypsum board.

E. Finish Facing: Vinyl coated fabric wall covering, carpet wall covering, fabric wall covering, or paint.

F. Accessories
1. Panel mounted ***markerboards.***
2. Minimum 3/16 inch thick tackable cork surface beneath finish material.
3. Pass doors.
4. Windows.

END OF SECTION

SECTION 102813

TOILET ACCESSORIES

GENERAL GUIDELINES

1.1 SECTION INCLUDES

A. Qualitative requirements for grab bars, towel dispensers, soap dispensers, toilet paper dispensers, shower accessories, metal framed mirrors, mop holder with shelf, shower curtain and rod, towel hooks, napkin disposals and vendors, hand dryers, and other accessories.

B. Accessories mounted on or recessed in walls and toilet compartments.

1.2 MATERIALS

A. Stainless Steel: ***AISI Type 304.***

B. Sheet Steel: ***ASTM A 1008.***

C. Galvanized – Steel Sheet: ASTM A 653, G60.

D. Galvanized Steel Mounting Devices: ASTM A 153.

E. Chrome Plating: ASTM B 456.

F. Mirrors: ASTM C 1503.

G. ABS Plastic: Acrylonitrile-butadiene-styrene resin formulation.

1.3 COMPONENTS

A. Grab Bars: Stainless Steel.

B. Towel Dispensers: Folded or roll towels.

C. Combination Towel Dispenser / Waste Receptacle: Roll or folded towels.

D. Folding Shower Seat

E. Soap Dispenser

F. Toilet Paper Dispenser: Roll or combination, roll.

G. Mirror
1. Stainless Steel Framed Mirror: Mirror shall have a one piece, ***stainless steel angle frame.***

H. Mop and Broom Holders

I. Shower Rods
   1. Shower curtains: Vinyl.

J. Towel Hooks

K. Sanitary Napkin Disposals and Vendors

L. Diaper Changing Stations

M. Child-Protective Seat

N. Hand Dryers
   1. Regulations: NFPA 70, UL, and ADA compliant.
   2. Operation: Touch button or electronic sensor activated with timed power cut-off switch.
   3. Cover Material and Finish: Cast-iron or steel with enamel finish; or stainless steel, no. 4 finish.

1.4 INSTALLATION

A. Install accessories with vandal-resistant fasteners.

END OF SECTION

SECTION 104400

FIRE PROTECTION SPECIALTIES

GENERAL ***GUIDELINES***

1.1 SECTION INCLUDES

A. Qualitative requirements for fire fighting devices and storage cabinets, except items or devices connected to a fire protection system.

1.2 QUALITY ASSURANCE

A. Integrity of fire rated walls must be maintained with installation of recessed or semi-recessed fire extinguisher cabinet.

B. Fire Extinguishers: NFPA 10.

1.3 FIRE EXTINGUISHERS

A. Type
1. Class K fires, potassium acetate kitchen.
2. Multipurpose dry chemical type in all other locations.

B. Public Area Mounting: Cabinet mounted.

C. Service Area Mounting: Metal brackets.

1.4 CABINETS

A. Cabinet Material: Steel

B. Door Style
1. Vertical duo panel with frame, unless otherwise indicated.
a. Door Glazing: Tempered glass.
1) Acrylic bubbles are not acceptable.
2. Solid panel at gymnasium.

C. Accessories
1. Door locks (optional).
2. Alarm (optional).

END OF SECTION

SECTION 105113

LOCKERS

GENERAL ***GUIDELINES***

1.1 SECTION INCLUDES

A. Qualitative requirements for storage facilities providing temporary security of contents; related hardware and locking devices; athletic and school lockers.

1.2 METAL LOCKERS

A. Type: Corridor (wardrobe) lockers, sheet steel, 0.0209 inch thick back and sides, 0.0528 inch thick doors and frame.
   1. Provide knock-down (mechanically assembled) standard locker construction.
   2. ***Material: Cold-rolled or metallic-coated steel sheet.***
   3. Door Style: Louvered vents at top and bottom, security vents, perforated vents, or concealed vents.
   4. Hinges: Knuckles or continuous.
   5. Locks.
   6. Recessed Latching: Provide either three-point latching or single point spring actuated latch. Single point gravity is not acceptable.

B. Type: Athletic lockers, all welded.
   1. Body
      a. Tops and Bottoms: 0.0528 inch unperforated, cold-rolled steel sheet.
      b. Backs
         1) 0.0428 inch solid
         2) 0.0528 inch perforated (exposed)
         3) 0.0897 inch expanded (exposed)
      c. Sides
         1) 0.0528 inch solid
         2) 0.0528 inch perforated
         3) 0.0897 inch expanded
   2. Doors
      a. 0.0677 perforated
      b. 0.0897 expanded
   3. Recessed Latching: Provide either three-point latching or single point spring actuated latch. Single point gravity is not acceptable.
      a. Provide strike and eye for padlock.

C. Tops: Sloped.

D. Number Plates: Aluminum plates with minimum 3/8 inch high etched, embossed or stamped numbers.

E. Locker Benches

LESSONS LEARNED

2.1 Storage provisions of the U.S. Architectural & Transportation Barriers Compliance Board's "Americans with Disabilities Act (ADA) and Architectural Barriers Act (ABA) Accessibility Guidelines for Buildings and Facilities" (hereafter, ADA-ABA Accessibility Guidelines) and ICC/ANSI A117.1, "Accessible and Usable Buildings and Facilities", apply to metal lockers.

2.2 Special lockers that comply with accessibility requirements are available from most locker manufacturers. Considerations in selecting accessible metal lockers include hardware requirements and locations of shelves, hooks, and coat rods. Also, the locker layout must be designed to accommodate requirements for clear floor space.

A. According to ADA-ABA Accessibility Guidelines, "Where lockers are provided, at least 5 percent, but no fewer than one of each type, shall comply" with accessibility requirements for clear floor space, reach ranges, and operable parts. Requirements are as follows:

1. Clear Floor Space: A minimum clear floor space of 30 by 48 inches must be provided in front of each accessible locker. The long dimension may be either parallel or perpendicular to the locker. Clear space must be free of obstructions such as benches and overlapping door swings.

2. Reach Ranges: For an unobstructed approach, the maximum forward and side reach is 48 inches above the floor. Shelves and equipment may not be mounted higher than the maximum reach permitted. The lowest shelf must be at least 15 inches above the floor. Mounting heights of interior equipment, such as coat hooks and coat rods, are determined by dimensions of metal lockers and locations of the equipment within them, but all mounting heights must be within reach ranges.

3. Operable Parts: Parts such as latches and locks must be placed within the reach ranges indicated above. Also, "Operable parts shall be operable with one hand and shall not require tight grasping, pinching, or twisting of the wrist. The force required to activate operable parts shall be 5 pounds maximum."

B. Special latches, keys, card-controlled electronic locks, and other accommodations complying with this requirement are available from locker manufacturers and are required, if locks are to be used.

END OF SECTION

SECTION 105613

METAL STORAGE SHELVING

GENERAL ***GUIDELINES***

1.1 SECTION INCLUDES

A. Qualitative requirements for open manufactured shelving for general storage.

1.2 PERFORMANCE REQUIREMENTS

A. Structural Performance for Four-Post Metal Storage Shelving: MH 28.1.

B. Structural Performance for Post-and Beam Metal Storage Shelving: MH 28.2.

1.3 PRODUCTS

A. Four-Post Metal Storage Shelving: Metal storage shelving system with shelves that span between and are supported by corner posts.

1. Open or Closed Type

a. Load-Carrying Capacity per Shelf: 350 lb (minimum).

b. Posts: Steel.

c. Bracing: Single or double diagonal cross bracing at back and ends.

d. Shelves: Metallic-coated steel sheet or metallic-coated steel wire.

e. Base: Open, with exposed post legs or closed, with base strips fabricated from same material and with same finish as shelving.

f. Accessories: Finished end panels, shelf dividers, bins, and shelf-label holders.

g. Finish: Baked enamel or powder coat.

B. Post-and-Beam Metal Storage Shelving

1. Load-Carrying Capacity per Shelf: 400 lb (minimum).

2. Posts: Steel.

3. Shelves: Particleboard, steel sheet, metallic-coated steel sheet, or ribbed-metal decking.

4. Accessories: Tie plates, supports back-to-wall and back-to-back, letter-/legal-size record boxes, letter-size record boxes, and record box support rails.

5. Finish: Baked enamel or powder coat.

END OF SECTION

SECTION 105626

MOBILE STORAGE SHELVING

GENERAL ***GUIDELINES***

1.1 SECTION INCLUDES

A. Qualitative requirements for mechanically-assisted, carriage-mounted, high-density mobile storage units, support rails, fabrication, and installation including leveling of support rails.

1.2 SYSTEM DESCRIPTION

A. Carriage System Design and Features: The carriage system consists of a formed structural steel frame with hardened steel wheel riding on steel rails recessed-mounted to the floor. Rails shall be types selected by the manufacturer to ensure smooth operation and self-centering of mobile storage units during travel without end play or binding. Rail types, quantities, and spacing shall be selected by the manufacturer to suit installation conditions and requirements. All bearings used in the drive mechanism shall be permanently shielded and lubricated.

1.3 QUALITY ASSURANCE

A. Ease of Movement: Provide mechanically-assisted units capable of being moved by exerting a maximum horizontal force of 5 pounds on the operating wheel.

1.4 COMPONENTS

A. Rails:
1. Material: ASTM/AISI Type 1035 or 1045 steel, manufacturer's selection.
2. Capacity: 1,000 pounds per lineal foot of carriage, minimum.
3. Minimum Contact Surface: 5/8 inch wide, minimum.
4. Provide rail sections in minimum 6-foot lengths.
5. Rail configuration shall permit attachment to top of structural floor system with provision for leveling rails to compensate for variations in floor surface level.
6. Provide rail connections designed to provide horizontal and vertical continuity between rail sections, to gradually transfer the concentrated wheel point load to and from adjoining rail sections. Butt joints are not permitted.

B. Carriages:
1. Provide manufacturer's design movable carriages fabricated of welded or bolted steel construction. Galvanized structural components and/or riveted carriages are unacceptable.
2. Provide fixed carriages of same construction and height as the movable carriages, anchored to rails. Setting fixed shelving directly on floors is not permitted.
3. When required, provide bolted carriage splices designed to maintain proper unit alignment and weight load distribution.
4. Design carriages to allow the shelving uprights to recess and interlock into the carriages a minimum of 3/4 inch. Top-mounted carriages are unacceptable.
5. Provide each carriage with two wheels per rail.

C. Drive/Guide System:
   1. Design: Provide drive system which prevents carriage whipping, binding, and excessive wheel/rail wear under normal operation.
      a. If line shafts are used, all wheels on one side of carriage shall drive.
      b. If synchronized drives are used, a minimum of one wheel assembly driving both sides of carriage at center location is required. Drive shaft shall exhibit no play or looseness over the entire length of that assembly.
   2. Shafts: Solid steel rod or tube.
   3. Shaft Connections: Secured couplings.
   4. Bearing Surfaces: Provide rotating load bearing members with ball or roller bearings. Provide shafts with pillow block or flanged self-aligning type bearings.

D. Wheels:
   1. Materials: Type 1045 solid steel. Minimum load capacity per wheel: 3200 lbs.
   2. Size: Minimum 5 inches, outside diameter drive wheels.
   3. Guides: Determined by manufacturer; minimum 2 locations.

E. Face Panels:
   1. Materials: Plastic laminate clad particle board with plastic edging on vertical edges.
   2. Finishes: Selected from manufacturer's standard available colors and patterns.

F. Accessories:
   1. Waist High Carriage Locks: Provide manufacturer's standard.

END OF SECTION

SECTION 107500

FLAGPOLES

GENERAL GUIDELINES

1.1 SECTION INCLUDES

A. Qualitative requirements for flagpoles.

1.2 PERFORMANCE REQUIREMENTS

A. Structural Performance: Provide flagpole assemblies, including anchorages and supports, capable of withstanding the effects of wind loads, determined according to NAAMM FP 1001, “Guide Specifications for Design of Metal Flagpoles”.
   1. Base flagpole design on polyester flags of maximum standard size suitable for use with flagpole or flag size indicated, whichever is more stringent.
   2. Basic Wind Speed: 90 mph; 3-second gust speed at 33 feet aboveground, unless otherwise noted as a greater wind speed.

1.3 PRODUCTS

A. Flagpoles
   1. Aluminum Flagpoles: Cone or Entasis tapered.

B. Mounting Type
   1. Foundation Tube.
   2. Vertical Wall Mount.
   3. Outrigger Wall Mount.

C. Fittings:
   1. Finial.
   2. Halyard
      a. Internal, winch system where pole is over 40 feet.
      b. External with locking cleat cover and halyard cover, where pole is under 40 feet.

END OF SECTION

11 EQUIPMENT DIVISION

TABLE OF CONTENTS

DIVISION 11: EQUIPMENT

111300	Loading Dock Equipment
113100	Residential Equipment
114000	Food Service Equipment
115123	Library Stack Systems
115213	Projection Screens
115313	Laboratory Fume Hoods
116143	Stage Curtains
116623	Gymnasium Equipment
116643	Interior Scoreboards
118226	Waste Compactors and Destructors
119200	Art Room Equipment - Kilns

SECTION 111300

LOADING DOCK EQUIPMENT

GENERAL ***GUIDELINES***

1.1 SECTION INCLUDES

A. Qualitative requirements for equipment and material for the protection of service docks and for the loading and unloading of various types of service vehicles including:
1. Dock bumpers.
2. Dock levelers.
3. Dock lifts (scissors lifts).
4. Truck restraints.

1.2 QUALITY ASSURANCE

A. Dock Leveler Standard: MH 30.1.

B. Dock Lifts Standard: MH 29.1.

C. Truck Restraints: MH 30.3.

1.3 DOCK BUMPERS

A. Type: Molded rubber or laminated tread.

B. Mounting: Horizontal, vertical, or integral to leveler.

1.4 DOCK LEVELERS

A. Type: Mechanical or hydraulic, recessed in dock or edge of dock.

B. Rated Capacity: 25,000 pounds.

C. Function: Dock levelers shall compensate for differences in height between truck bed and loading platform.

D. Safety Device: Truck restraint designed to hold vehicle at load dock, if grade would allow vehicle to roll away.

1.5 DOCK LIFTS

A. Scissors-type hydraulic dock lift of capacity, size, and construction indicated; complete with controls, safety devices, and accessories required.
1. Mounting: Recessed.
2. Type: Stationary.
3. Lift Capacity: Not less than 5,000 pound axle load at ends and 5,000 pound axle load at sides.
4. Vertical Travel: Maximum of 60 inches from lowered height of 12 inches.

END OF SECTION

SECTION 113100

RESIDENTIAL EQUIPMENT

GENERAL GUIDELINES

1.1 SECTION INCLUDES

A. Qualitative requirements for residential type equipment.

1.2 QUALITY ASSURANCE

A. Regulatory Requirements
1. NFPA 70
2. UL and NEMA
3. AGA and ANSI
4. NAEAC
5. ANSI A117.1

1.3 EQUIPMENT

A. Items funded by the OSFC:
1. Cooktop
2. Range
3. Oven
4. Microwave
5. Exhaust Hood
6. Refrigerator/Freezer
7. Dishwasher
8. ***Washer***
9. ***Dryer***

END OF SECTION

SECTION 114000

FOOD SERVICE EQUIPMENT

GENERAL ***GUIDELINES***

1.1 SECTION INCLUDES

A. Qualitative requirements for equipment used for liquid and solid food storage, preparation, display, serving and cleanup in commercial kitchens.

B. Kitchen hood provided in Division 25.

1.2 QUALITY ASSURANCE

A. Codes and Standards
1. NSF Seal of Approval.
2. Underwriters' Laboratories Label.
3. NFPA 54, National Fuel Gas Code.
4. NFPA 70, National Electrical Code.
5. NFPA 96, Removal of Smoke and Grease-Laden Vapors from Commercial Cooking Equipment.
6. ASME Boiler Code.
7. Public Health Service Publication "Food Service Sanitation Manual".

1.3 FOOD SERVICE EQUIPMENT MATERIALS

A. Stainless Steel: AISI Type 302 or Type 304, No. 4 polished finish.
1. Unexposed finish shall be No. 2B.

B. Tops, Sinks, Dishtables and Drainboards: 14 gauge stainless steel.

C. Cabinet Bodies and Doors: 16 gauge stainless steel.

D. Drawers: 18 gauge stainless steel body with 16 gauge stainless steel front.

E. Shelves: 14 gauge stainless steel.

F. Cold Pans: 14 gauge stainless steel.

END OF SECTION

SECTION 115123

LIBRARY STACK SYSTEMS

GENERAL GUIDELINES

1.1 SECTION INCLUDES

A. Qualitative requirements for library shelving and accessories.

1.2 QUALITY ASSURANCE

A. Quality Standard: Steel bracket shelving to comply with ANSI Z39.73.

1.3 LIBRARY SHELVING

A. Steel Bracket Units
1. Type: Single- or double-faced units.
2. Frame Style: Upright post, display, or wall hung.
3. Panels: End panels, countertops, canopy tops, and back panels.
a. Face: Wood veneer or high-pressure decorative laminate.

B. Steel Case Shelving
1. Panels: At top, back, and ends of units over steel panels.
a. Face: Wood veneer or high-pressure decorative laminate.

C. Wood Case Shelving
1. Type: Single- or double-faced units.
2. Panels: At top, back, and ends.

LEED SUGGESTIONS

2.1 LEED materials and resources credits, from the U.S. Green Building Council's (USGBC) LEED Rating System are usually awarded for construction of the base building prior to the installation of fixtures, furniture, and equipment (FFE). Because bookstacks are often considered FFE items, optional specification language for LEED credits has not been included in this Section.

2.2 If the designer does not wish to classify library shelves as FFE items, USGBC should be contacted for an interpretation on the specific project. In such cases, this Section may be altered by adding language similar to that found in the "LEED Submittals" Paragraph in Part I of the "Interior Architectural Woodwork" Section, and then by altering Part 2 "Wood Materials" Article in this Section's Text to require low-emitting materials. Other requirements can be added to suit the Project.

END OF SECTION

SECTION 115213

PROJECTION SCREENS

GENERAL GUIDELINES

1.1 SECTION INCLUDES

A. Qualitative requirements for projection screens, their accessories, and necessary mounting and installation hardware.

1.2 FRONT PROJECTION SCREENS

A. Material and Viewing Surface of the Front Projection Screens: Provide screens manufactured from mildew and flame-resistant fabric of type indicated for each type of screen specified:
   1. Matte white viewing surface. Peak gain of 0.9 to 1.0, and gain of not less than 0.8 at an angle of 50 degrees from the axis of the screen surface.
   2. Material: Vinyl coated glass fiber fabric.
   3. Size of Viewing Surface
      a. At classrooms; 60 inches by 80 inches. (100 inches diagonal)

B. Manually Operated Screens: Fabricated for wall installation and consisting of case, screen, and mounting accessories.

C. Electrically Operated Screens: UL labeled units consisting of case, screen, motor, controls, mounting accessories, and other components.

LESSONS LEARNED

2.1 Coordinate layout and installation of projection screens with adjacent construction, including ceiling frame, light fixtures, HVAC equipment, fire-suppression system, and partitions.

A. Coordinate with location of ***ultra-short throw interactive projectors***.

END OF SECTION

SECTION 115313

LABORATORY FUME HOODS

GENERAL GUIDELINES

1.1 SECTION INCLUDES
- A. Qualitative requirements for bench-top laboratory fume hoods, floor-mounted laboratory fume hoods, and piping and wiring within fume hoods.

1.2 PERFORMANCE REQUIREMENTS
- A. Containment: Tested according to ASHRAE 110.

1.3 QUALITY ASSURANCE
- A. Product Standard: SEFA.

1.4 PRODUCTS
- A. Fume Hoods
  1. Exterior: Steel with chemical-resistant finish or fiberglass.
  2. Interior Lining: Glass-fiber cement board, glass-fiber cement board with acid-resistant finish, steel sheet with epoxy coating, glass-fiber-reinforced polyester, epoxy, glass-fiber-reinforced epoxy, stainless steel, phenolic composite, or polypropylene.
- B. Accessories
  1. Airflow indicator.
  2. Airflow alarm.
  3. Sash alarm.

1.5 FIELD QUALITY CONTROL
- A. Hoods field tested according to “Flow Visualization and Velocity Procedure” requirements in ASHRAE 110.

1.6 FUME HOOD SCHEDULE
- A. Bench Top Fume Hood Type
  1. Ventilation Type: Constant volume, constant volume with variable-air-volume control, bypass, auxiliary-air bypass, or restricted bypass with variable-air-volume control.
  2. ASHRAE 110 As-Manufactured (AM) Rating: AM 0.05 maximum.
  3. ASHRAE 110 As-Installed (AI) Rating: AI 0.10 maximum.
  4. Work Top: Epoxy or phenolic composite.
  5. Cup Sinks: Epoxy, polypropylene, or stainless steel.
  6. Service Fittings.
- B. Floor-Mounted Fume Hood Type
  1. Ventilation Type: Constant volume, constant volume with variable-air-volume control, bypass, auxiliary-air bypass, or restricted bypass with variable-air-volume control.
  2. ASHRAE 110 As-Manufactured (AM) Rating: AM 0.05 maximum.
  3. ASHRAE 110 As-Installed (AI) Rating: AI 0.10 maximum.
  4. Floor: Epoxy or phenolic composite.
  5. Cup Sinks: Epoxy, polypropylene, or stainless steel.
  6. Service Fittings.

END OF SECTION

SECTION 116143

STAGE CURTAINS

GENERAL ***GUIDELINES***

1.1 SECTION INCLUDES

A. Qualitative requirements for stage curtains and tracks.

1.2 QUALITY ASSURANCE

A. Flame-Resistant Rating: NFPA 701.

1.3 MATERIALS

A. Curtain Fabrics

1. Main Curtain

a. 25 oz. per lineal yard woven cotton velour fabric; 54-inch minimum width.

2. Intermediate Curtain and Side Leg Drops

a. 20 oz. per lineal yard woven cotton velour fabric; 54-inch minimum width.

3. Rear Curtain

a. Muslin: Shear, plain woven fabric of 100 percent uncounted cotton weighing not less than 6 oz. per lineal yard; 100-inch minimum width.

B. Rigging

1. Curtain Battens: Steel pipe.

2. Trim and Support Cable: Steel air craft cable.

3. Trim and Support Chain: Grade 80 hardened alloy steel chain.

C. Curtain Tracks: With pulleys, blocks, carriers, and operating line.

1. Aluminum, straight or curved, for walk-along operation.

2. Steel, medium duty.

END OF SECTION

SECTION 116623

GYMNASIUM EQUIPMENT

GENERAL ***GUIDELINES***

1.1 SECTION INCLUDES

A. Qualitative requirements for equipment intended for use in athletic activities including:
1. Basketball backstops
2. Volleyball equipment
3. Gym dividers
4. Miscellaneous gymnasium equipment

1.2 QUALITY ASSURANCE

A. Standards: National Federation of State High School Associations ***(NFHS)***

B. Electrical Components, Devices, and Accessories: NFPA 70, Article 100.

1.3 BASKETBALL BACKSTOPS

A. Frame Assembly
1. Elementary School: Adjustable goal height.

B. Backboards: 3 feet 6 inches by 6 feet 0 inches
1. Tempered glass at main court and overhead supported units at side courts.
a. Provide fiberglass or wood backboards at wall-mounted side courts.

C. Goal: Front mount direct to frame assembly. Provide breakaway type rim.

D. Operation: Electric winch at overhead-supported folding backstops only.

E. Backstop Safety Lock: One on each overhead-supported backstop.

F. Backboard padding.

1.4 VOLLEYBALL EQUIPMENT

A. Volleyball Floor Plates and Sleeves
1. Floor Plate: Cast brass with flush hinged type.
2. Sleeve: Steel construction with concrete base flange and predrilled top flange to receive floor plate.

B. Volleyball Standards and Net
1. Extruded aluminum or extruded high strength steel standards.
a. Provide minimum of 10 height adjustments.
2. Net: Provide 4-inch square mesh fabricated from #24 nylon and vinyl-coated steel top cable.

C. ***Accessories (optional): Net tensioning system, bottom net lock tightener, judges' stands, safety pads, post standard transporter, wall storage rack, and storage cart.***

1.5 GYM DIVIDERS

A. Type: Fold up, roll up, or walk draw.

B. Curtain Material
1. Lower Section: 18 ounce solid vinyl polyester reinforced fabric, flame resistant.
2. Upper Section: Open polyester grid weave, coated with PVC, flame resistant.

C. Operation: Electric or manual.

D. Suspension System: Anchored to structural framing.

E. Accessories
1. Wall-mounted key switch control.

1.6 MISCELLANEOUS GYMNASIUM EQUIPMENT

A. ***Safety*** Padding
1. Flame***,*** puncture, and tear-resistant vinyl coated nylon fabric over foam filler adhered to plywood backing board.
2. Cover Material: 14 oz. minimum.
3. Flame-resistant rating: Passes NFPA 701.
4. Fabric cover to be treated with fungicide for mildew resistance.

B. Mat Hoist (optional)
1. Stationary overhead-supported mat hoist capable of hoisting one 45 by 45 foot mat.

C. Chinning Bar ***(optional)***
1. Bar shall be 1-1/16 inch diameter by 3 feet 6inches in length, supported by formed brace supports approximately 1 foot 5 inches from wall.

END OF SECTION

SECTION 116643

INTERIOR SCOREBOARDS

GENERAL ***GUIDELINES***

1.1 SECTION INCLUDES

A. Qualitative requirements for interior scoreboard and accessories.

1.2 MATERIALS

A. Unit to score volleyball, basketball, and wrestling.

B. Wall mounted unit.

C. Tenth of a second timing for last 50 seconds.

D. Control console for each board installed.

E. Carrying case.

F. Shot clocks at high schools.

1.3 INSTALLATION

A. Provide console control outlet in spectator bleachers.

END OF SECTION

SECTION 118226

WASTE COMPACTORS AND DESTRUCTORS

GENERAL GUIDELINES

1.1 SECTION INCLUDES

A. Qualitative requirements for waste compactors, component fittings, and accessories.

1.2 QUALITY ASSURANCE

A. Electrical Components, Devices, and Accessories: Listed and labeled as defined in NFPA 70, Article 100, by a testing agency acceptable to authorities having jurisdiction, and marked for intended use.

B. Waste Compactor Standards: Comply with ANSI Z245.2, "Equipment Technology and Operations for Wastes and Recyclable Materials—Stationary Compactors—Safety Requirements," and NFPA 82, "Incinerators and Waste and Linen Handling Systems and Equipment."

C. Waste Bin and Hopper Standard: Comply with ANSI Z245.30, "Refuse Collection, Processing, and Disposal Equipment—Waste Containers—Safety Requirements."

1.3 WASTE COMPACTORS

A. Self-Contained Horizontal (Liquid Wastes) Compactors: Manufacturer's standard packaged units with components, options, and accessories needed to comply with requirements and provide complete functional systems.
   1. Minimum WASTEC Rating/NSWMA Base Size: 1.00 cu.yd (0.765 cu.m).
   2. Controls
      a. Provide fully enclosed doghouse with side door, to be fed from ground.
      b. Key-controlled motor.

LEED SUGGESTIONS

2.1 LEED certification of a project requires documentation that all prerequisite requirements (prerequisites) have been met, plus a minimum number of Credit points. The U.S. Green Building Council's MR-Prerequisite 1, "Storage and Collection of Recyclables," requires "an easily accessible area that serves the entire building and is dedicated to the collection and storage of non-hazardous materials for recycling, including (at a minimum) paper, corrugated cardboard, glass, plastics, and metals." Most other LEED rating systems have a similar requirement. Waste compactors are generally an essential part of efficient collection and storage of waste for recycling.

A. Recycling significantly reduces the volume of waste to be transported and can improve sanitation where the waste originates. Presorting and separating waste materials as part of a recycling program requires temporary on-site storage of recyclable waste. Separating and compacting materials such as cardboard and other paper products reduces storage space necessary between collections.

END OF SECTION

SECTION 119200

ART ROOM EQUIPMENT - KILNS

GENERAL ***GUIDELINES***

1.1 SECTION INCLUDES

A. Qualitative requirements for kilns and accessories.

1.2 QUALITY ASSURANCE

A. UL / CSA Listed.

1.3 KILN FEATURES

A. Dimensions: Minimum 23.5-inch width and 27-inch depth.

B. Power Supply: Gas or 208V electric.

C. Temperature: 10 cone or 2350 degree Fahrenheit minimum.

D. Automatic Controller.

1.4 ACCESSORIES

A. Vent

B. 3-inch Brick

C. Furniture kit

END OF SECTION

12 DIVISION

FURNISHINGS

TABLE OF CONTENTS

DIVISION 12: FURNISHINGS

122113	Horizontal Louver Blinds
122413	Roller Window Shades
123550	***Educational Casework***
123553	Laboratory Casework
124813	Entrance Floor Mats and Frames
124816	Entrance Floor Grilles
126600	Telescoping Stands
129100	Site Furnishings

SECTION 122113

HORIZONTAL LOUVER BLINDS

GENERAL GUIDELINES

1.1 SECTION INCLUDES

A. Qualitative requirements for horizontal louver blinds with aluminum slats.

1.2 PRODUCTS

A. Horizontal Louver Blinds, Aluminum Slats
1. Coating: Reflective.
2. Maximum Light-Blocking Type.
3. Tilt Control: Manual with wand or manual with cord.
4. Lift Operation: Manual with cord.
5. Valance.

END OF SECTION

SECTION 122413

ROLLER WINDOW SHADES

GENERAL GUIDELINES

1.1 SECTION INCLUDES

A. Qualitative requirements for roller window shades.

1.2 QUALITY ASSURANCE

A. Fire-Test-Response Characteristics: Passes NFPA 701.

B. Motorized Operators: UL listed.

C. Comply with WCMA A 100.1.

1.3 PRODUCTS

A. Shade Band Material: PVC-coated fiberglass, PVC-coated polyester, PVC-coated fiberglass and polyester blends, or fiberglass and acrylic blend.

B. Rollers: Electrogalvanized or epoxy primed steel or extruded-aluminum tube.

C. Top: Fascia and end caps; fascia, end caps, and top/back cover; pocket-style headbox with bottom cover or pocket with ceiling slot opening.

D. Shade Type: Audiovisual light blocking or skylight.

E. Shade Operation: Manual with spring roller; manual with continuous-loop bead chain, clutch, and cord tensioner and bracket; manual with gear and crank; or motorized operator.

F. Valance.

LEED SUGGESTIONS

2.1 Shading coefficient (SC) and the more recently preferred solar heat gain coefficient (SHGC) are values derived from the solar-optical properties of the glass or other glazing, the in-between air space, and the fenestration covering assembly. The relationship of glazing, shading, and fenestration energy flow is well-documented in the 2001 ASHRAE HANDBOOK – Fundamentals, Ch. 30. Both coefficients measure how well a glazed opening blocks heat caused by sunlight; the lower the SC or SHGC, the less heat gained in the protected space. The optimum solar0optical property levels for lowering SC and SHGC and reducing heat gain are as follows:

A. Transmittance – Low
B. Absorptance – Low
C. Reflectance – High

2.2 Roller shades with metalized fabric backings can lower the solar heat gain through glazed openings by blocking transmission of and reflecting incoming solar radiation. Low absorptance of metalized fabrics minimizes heat gain caused by radiant heat. Metallized shades mounted in front of a single pane will reduce directly transmitted solar energy by at least 80%. Besides reflecting heat, metallized fabrics reflect light and control glare.

2.3 SC and SHGC values for light- or dark-colored roller shades vary significantly. Reducing heat gain through glazed openings from solar exposure is best accomplished with light-colored shades because light-colored surfaces reflect light more efficiently and absorb less heat than dark-colored surfaces. Solar-optical values for the shade material and color should be obtained from the manufacturer and considered when calculating HVAC cooling loads.

2.4 Fixed lites with tinted or coated glazing assemblies with low SC and SHGC ratings may not require shading devices. Internal shading devices can only affect solar radiation that has passed through the tinted or coated glass and can reduce only that portion of the heat gain than can be reflected back through the glass again. According to the 2001 ASHRAE HANDBOOK – Fundamentals, "the energy benefit of a shade decreases as the SC of the unshaded glass decreases, due to the low transmittances and the inability of the occupant to change this factor."

2.5 In cold climates, roller shades can be manipulated to admit heating solar radiation when opened or to help retain room heat when fully closed. Depending on the building orientation, site conditions, outside-air temperature, and glazing assembly characteristics, it is possible for solar heat gain to offset heat loss through glazed openings during heating operations.

2.6 Designed use of daylighting is an issue that is increasingly being considered by Design Professionals. Daylighting can be used in building design in lieu of or as a supplement to electric lighting, with consequent reduction in energy consumption. Given constantly changing and widely variable conditions, predicting daylight distribution and glare in actual buildings can be complex. Integrating the effects of daylighting with those of electric lighting so adequate illumination levels can be achieved and maintained may also be complicated. Computer programs are currently being developed to aid in the design and analysis of daylighting. Because blinds and shades can be easily and effectively used to manipulate daylighting, they may play an important role in practical lighting design decisions.

END OF SECTION

SECTION 123550

EDUCATIONAL CASEWORK

GENERAL GUIDELINES

1.1 SECTION INCLUDES

A. Qualitative requirements for educational casework including open casework, modular casework, and music casework, manufactured with plastic laminate facing and countertops.

1.2 QUALITY ASSURANCE

A. Casework Grade: Provide plastic laminate faced casework complying with the referenced quality standard and the following grade:
   1. Grade: custom ***per Architectural Casework Quality Standards***.

B. Design Requirements for Educational Casework
   1. Design system of cabinets which will be chip and abrasion-resistant under normal usage and will protect student clothing, materials, musical instruments and cases from damage under normal use.
   2. Design shelving to withstand continuous use without surface or front edge breakdown.
   3. Hanger rods or hooks to support a minimum vertical load of 200 pounds applied anywhere.
   4. Full-height door to support a minimum vertical load of 200 pounds applied at outer edge.

1.3 MATERIALS

A. Low-Emitting Materials: Adhesives and composite wood products shall not contain urea formaldehyde.

B. Plastic laminates, provide one of the following:
   1. High pressure decorative laminate complying with NEMA LD3, Grade GP-28.
   2. High pressure decorative laminate complying with NEMA LD3, Grade CL-20.
   3. High pressure decorative laminate complying with NEMA LD3, Grade BK-20.

C. Edge Banding for Plastic Laminate: Rigid PVC extrusions, through color with satin finish, 3mm thick at doors and drawer fronts, 1mm thick elsewhere.

D. Melamine Faced Particleboard: Medium density particleboard complying with ANSI A208.1, Grade M-2, with decorative surface of thermally fused, melamine impregnated web complying with ALA 1992.

E. Particleboard: ANSI A208.1, Grade M-2.

F. Hardboard: AHA A135.4, Class 1 tempered.

G. Plywood: Hardwood plywood of any species similar in color and grain to exposed wood. HPVA HP-1, Grade C faces and Grade J crossbands. Semi-exposed backs of plywood with exposed faces shall be the same species as faces.

H. Epoxy Tops and Sinks (Science Rooms): Factory molded of modified epoxy-resin formulation, uniform mixture throughout full thickness with smooth, nonspecular finish.

I. Hardware and Accessories
1. Batt Hinges: BHMA A 156.9.
   a. Frameless, concealed (European type) are not acceptable.
2. Pulls.
3. Door Catches.
4. Drawer Slides: BHMA A 156.9.
5. Drawer and Door Locks on all doors and drawers.
6. Adjustable Shelf Supports.
7. Grommets.
8. Tote Trays.
9. Articulating Keyboard Trays.
10. Glass: 1/4 inch laminated safety glass.
11. Coat Rods.
12. Mirrors.

PLASTIC LAMINATE CASEWORK CONSTRUCTION
(Dimensions are minimum)

	CORE	SURFACE	EDGE	CONSTRUCTION/ JOINERY	HARDWARE
Cabinet Boxes - Base and Wall					
*Exposed vertical surfaces	All front and Sides: 3/4" Particleboard Base bottom: 3/4" plywood Wall top and Bottom: 3/4" Particleboard Back: entrapped - 3/8" particleboard or 1/4" tempered hardboard	GP28	Finish all exposed edges (including wall cabinet top and bottom with 1mm (PVC)).	***Join using concealed dado, dowels, assembly screws, or interlocking mechanical fasteners. Where the concealed dado or dowel method are employed, cases shall be assembled utilizing glue and pressure.***	
*Semi-exposed parts (interior of open cabinets, not including drawer bodies)		CL20 or melamine			
*Concealed surfaces		CL20 or melamine			
*Panel ends		GP28			
Countertops (wet areas)	1" exterior grade veneer core plywood or phenolic resin particleboard	GP50 balanced with backing sheet	3mm PVC	Apply silicone sealant to joint between HPL top and backsplash. Field joints >48" apart and >48" from end of top.	

	CORE	SURFACE	EDGE	CONSTRUCTION/ JOINERY	HARDWARE
Countertops	1" particleboard 1" epoxy resin (science rooms)	GP50 balanced with backing sheet	GP50	Apply silicone sealant to joint between HPL top and backsplash. Field joints >48" apart and >48" from end of top.	
Cabinet Doors	3/4" particleboard	GP28 with CL20 liner on back.	3mm PVC		Heavy duty, 5 knuckle, 2-3/4" institutional type hinge (no concealed hinges).
Drawer Fronts	3/4" particleboard	GP28 with CL20 liner on back.	3mm PVC	***Dovetailed, lock shoulder or d***oweled, glued under pressure.	Wire design pulls.
Drawer Sides and Backs	1/2" particleboard or 5/8" medium density fiberboard	Melamine on all visible surfaces with drawer in normal open position.			Combination epoxy coated steel and nylon roller bearing drawer slides. Self-closing. Full extension for file drawers.
Drawer Bottoms	Fully captured Construction - Minimum thickness: 1/4". Platform construction - minimum thickness: 1/2".	Melamine panel product or particle-board.			Platform construction; must use wrap around drawer slide.
Shelves	1" particleboard	GP28	1mm PVC on front and back edges.	Multiple holes (minimum 5mm diameter at 1-1/4" O.C.).	

1.4 COMPONENTS

A. Open Casework for Coats: Open plastic laminate units with either coat rods or coat hooks and shelves or divided shelf space into smaller spaces (i.e. 12 inches ***wide*** by 72 inches ***high*** by ***12*** inches deep) for children's personal storage. Exact dimensions ***and design may*** vary depending on shape of room. ***Design should be "age appropriate". For example, lower grade classrooms could include 12 inches wide by 48 inches high by 12 inches deep "cubbies" with a 12" x 12" x 12" shelf above. A seat/shelf may be included as well. Design should be coordinated with District to meet student needs.***

B. Tall Wardrobe: Coat and personal belonging storage for staff. Cabinet should be 24 inches deep, 84 inches tall, and range from 18 to 24 inches wide. Some wardrobe units have a file drawer in bottom depending on staff needs.

C. Tall Storage: Cabinet with door in various depths and widths, and either 72 to 84 inches high. Interior configuration will vary from adjustable and fixed shelves to built-in files or tote tray bin storage depending on specific needs.

D. Mail Cubicles: Plastic laminate unit with either removable or fixed divider shelves for staff mail. Mail slots are usually about 12 to 14 inches deep, 10-1/2 to 12 inches wide, and 2 to 3 inches high.

E. Worksurface: Plastic laminate countertop with grommets and grommet holes for card access to electrical receptacles and computer ports below worksurface. Worksurface would be placed at required height for specific tasks with kneespace under it and structural supports to the floor. There would be no backsplash at a worksurface.

F. Bookcases: Plastic laminate open (no doors) 12-inch deep units in various widths and heights with adjustable shelves. Units would have a plastic laminate countertop on it.

G. Deep Tall Shelving: Plastic laminate open units (no doors) that are either 72 or 84 inches high and deeper than 12 inches. Widths will vary. Units should not be over 36 inches wide to avoid warping of shelves under weight of books.

H. Circulation Desk Casework: Plastic laminate unit (could have wood edges) designed specifically for the function of checking in and out books in a media center, reference assistance from staff to students, and work area for media center staff. Unit needs to be ADA accessible, and should include space for computers, file storage, minimal book storage, worksurface for writing, and space for the return of books. Size, shape, and specifics of this unit should be based on shape of room, size of media center, type of school, and school programs. Include grommet and grommet holes for cord access to computer ports and electrical receptacles.

I. Secretarial Workstation: Plastic laminate unit (could have wood edges) designed specifically for the function of secretarial/administrative duties. Unit needs to be ADA accessible, and should include space for computers, file storage, small personal supply storage, manual and form storage and worksurfaces for writing and telephone. 42 inches high, 10 to 12 inches deep transaction surfaces are often used. Size, shape, and specifics of this unit should be based on shape of room, size of school, and functions of staff. Include grommets and grommet holes for cord access to computer parts and electrical receptacles.

1.5 MUSIC CASEWORK

A. Cabinet Wall Panels: 3/4 inch thick industrial grade particleboard, minimum 45 pcf with thermoset polyester laminate complying with NEMA LD3-1991, GP 20 and ALA 1992 specifications standards.

B. Cabinet Shelving
   1. Cabinets up to 27 inches wide: One piece high molecular blow molded polyethylene with 1-3/8 inch radius front edge or ABS surfacing thermo-formed with ribbed pattern and hair cell texture. Mount to cabinet walls with steel clip supports.
   2. Robe/Uniform Storage Cabinets over 27 inches wide: Two piece high molecular blow molded polyethylene with 1-3/8 inch radius front edge or ABS surfacing thermo-formed with ribbed pattern and hair cell texture. Mount to cabinet walls with steel clip supports.
   3. Instrument Storage Cabinets over 27 inches wide: Industrial (cabinet) grade particleboard, minimum 45 pcf, 3/4 inch thick with 1-1/2 inch thick front edge drop with 1-3/8 inch radius and postforming grade high pressure plastic laminate. Mount to cabinet walls with steel clip supports. Provide tubular steel support at front edge.

C. Edges: Laminate doors and leading edge of music instrument storage cabinet vertical and upper horizontal members shall have a high impact rigid PVC extrusion, 3mm in thickness. The 3mm thick edging shall be applied with hot melt adhesive, and shaped to provide radiused front edges.

D. Grille doors shall be constructed of electronically welded, .314-inch diameter heavy gauge steel perimeter and crossbrace wire, and .194-inch diameter vertical stringer wire. Five knuckle hinge and lock hasp shall be formed and welded to door frame and cross members. Lock hasp provides space for name/number plate.

E. Finish Hardware
   1. Hinges, compartment doors: Two case hardened spring steel barrel hinges with .094-inch thick leaves and .25-inch diameter nonremovable pins. Through bolt to cabinet wall.
   2. Hinges, full-height cabinet doors: Continuous steel hinges.
   3. Locking slide bolt designed for padlocks, with strike plate; 14 gauge steel; provide clear plastic label holder for identification card insert.
   4. Cabinet levelers: Four leveling glides within minimum 3/8-inch diameter threaded rod in steel corner brackets.

LEED SUGGESTIONS

2.1 The U.S. Green Building Council's - Green Building Rating System require that a minimum of 50% of wood-based materials be certified as having been obtained from forests that comply with FSC STD-01-001, FSC Principles and Criteria for Forest Stewardship, for a building to qualify for Credit MR 7. Because the percentage of certified wood-based materials is determined from the costs of the various wood-based materials, casework can have a significant effect on meeting the 50% requirement. The Certified Forest Products Council lists on its website a number of cabinet manufacturers who produce cabinets made from certified wood.

2.2 LEED Credit EQ 4.4 (low-emitting materials) that require composite wood products be made without using urea-formaldehyde binders or adhesives. Urea-formaldehyde binders are commonly used in particleboard and MDF, and urea-formaldehyde adhesive is used in hardwood plywood. Softwood plywood and hardboard do not used urea formaldehyde. Particleboard made with a phenol-formaldehyde binder, which emits far less formaldehyde than urea formaldehyde and which qualifies as an "exterior glue," is available. MDF made without urea formaldehyde is also available.

END OF SECTION

SECTION 123553

LABORATORY CASEWORK

GENERAL GUIDELINES

1.1 SECTION INCLUDES

A. Qualitative requirements for plastic-laminate laboratory casework, including countertops, sinks, and service fittings.

1.2 QUALITY ASSURANCE

A. Construction shall equal or exceed that of “Educational Casework”.

B. Electrical Components, Devices, and Accessories: Listed and labeled as defined in NFPA 70, by a qualified testing agency, and marked for intended location and application.

C. Flammable Liquid Storage Cabinets: NFPA 30.

1.3 MATERIALS

A. Materials:
1. Particleboard: ANSI A 208.1, Grade M-2, made with binder containing no urea formaldehyde or straw-based particleboard complying with ANSI A 208.1, Grade M2, except for density, made with binder containing no urea formaldehyde.
2. Plastic Laminate: High pressure decorative laminate complying with NEMA LD3.
   a. Thermostet panels may be used for semi-exposed surfaces, only.
3. Edgebanding for Plastic Laminate: Rigid PVC extrusions, through color with satin finish, 3mm thick at doors and drawer fronts, 1mm thick elsewhere.
4. Acid Storage Lining: 1/4 inch thick polypropylene, epoxy, or phenolic composite lining material.

B. Countertops
1. Materials: Epoxy resin ***or phenolic composite***, 1 inch thick minimum.

C. Sinks
1. Material: Cast epoxy resin.

D. Service Fixtures
1. Piped Service: Air, gas, vacuum, steam, hot water, cold water, and distilled water.
   a. Comply with SEFA 7, “Laboratory and Hospital Fixtures – Recommended Practices.”
      1) Comply with “Vandal-Resistant Faucets and Fixtures” recommendations in SEFA 7.
2. Power Receptacles: Comply with NEMA WD 1, NEMA WD6, and UL498. Duplex type, configuration 5 20R.
   a. Receptacle Grade: Hospital.

1.4 HARDWARE

A. Locks: Cam type, complying with BHMA A156.H, Type E07281.

B. Hinges: Stainless-steel or epoxy-coated steel 5 knuckle, complying with BHMA 156.9, Grade 1, with antifriction bearings and rounded tips.
   1. Frameless concealed hinges, Type BD1602, are not acceptable.

C. Pulls: Bent metal wire of stainless steel.

D. Drawer Slides: Steel, self-closing; complying with BHMA A156.9, Type B05091.
   1. Heavy Duty (Grade 1HD-100 and Grade 1HD-200): Full over travel extension, ball-bearing type.

E. Adjustable Shelving Supports: Powder-coated steel shelf rests complying with BHMA A156.9, Type B04013.

F. Catches: Roller type or magnetic type.

1.5 ACCESSORIES (optional)

A. Reagent Shelves.

B. Burette Rods.

C. Upright Rod Assembly and Metal Crossbar.

D. Lattice Assembly.

E. Pegboards.

END OF SECTION

SECTION 124813

ENTRANCE FLOOR MATS AND FRAMES

GENERAL GUIDELINES

1.1 SECTION INCLUDES

A. Qualitative requirements for special floor surfaces at entrances including roll-up linked tread type floor mat can be either recessed or surface mounted, or entrance tiles. Are not intended to be mounted over a drainage pit.

B. There shall be a five-step or fifteen foot walk off mat at all entry points into the building. If the area cannot accommodate a fifteen foot mat, the mat should be as long as the area will accommodate.

1.2 ROLL-UP MATS

A. Recessed Mat Frames
1. Extruded Aluminum: ASTM B 221, alloy 6063-T5.

B. Roll-Up Vinyl or Aluminum Linked Tread Floor Mat.
1. Tread Surface: Level-cut, nylon pile carpet.

1.3 ENTRANCE TILES

A. Carpet-Type Tiles.

LEED SUGGESTIONS

2.1 Dust and dirt can be carried into buildings on people's footwear, contributing to Indoor Air Quality (IAQ) problems and reducing the durability of interior floor finishes. Comprehensive walk-off systems specifically engineered for this purpose can offer a cost effective solution.

END OF SECTION

SECTION 124816

ENTRANCE FLOOR GRILLES

GENERAL GUIDELINES

1.1 SECTION INCLUDES

A. Qualitative requirements for recessed foot grilles and frames.

1.2 COMPONENTS

A. Aluminum Foot Grilles
1. Top Surface: Serrated aluminum or carpet insert.

B. Frame: Same material and finish as foot grille.

END OF SECTION

SECTION 126600

TELESCOPING STANDS

GENERAL GUIDELINES

1.1 SECTION INCLUDES

A. Qualitative requirements for telescoping bleachers.

1.2 DESIGN REQUIREMENTS

A. Comply with ADA Rules and Regulations, and ICC/ANSI 300-2002 Bleachers, Folding and Telescopic Seating, and Grandstands.

1.3 COMPONENTS

A. Bench seats; wood or contour plastic seating
   1. Wood Bench Bleachers
      a. Depth: 10 inches
   2. Molded Plastic Bleachers
      a. Profile: Contoured seat surface
      b. Depth: 10 inches (12 inches, option with 24 minimum row spacing)

B. Operation, provide one of the following:
   1. Manual (limit 12 rows).
   2. Automatic friction or nonfriction type integral power unit.

C. Wheelchair-Accessible Seating: Seating cutouts or retractable truncated benches. ***Refer to ADAAG 4.33.3.***

D. Deck: Plywood.

E. Safety Rails.

F. Accessories: Steps, stairs, ramps, closure panels, signage, and scorer's table.

END OF SECTION

SECTION 129100

SITE FURNISHINGS

GENERAL GUIDELINES

1.1 SECTION INCLUDES

A. Qualitative requirements for site furniture and fixtures.

1.2 PRODUCTS

A. Trash Receptacles: Precast concrete or metal to act as a holder for can or bag.

B. Seating: Precast concrete or metal.

C. Bicycle Racks: Steel pipe or tubing.

END OF SECTION

THIS PAGE HAS BEEN INTENTIONALLY LEFT BLANK.

13 DIVISION

SPECIAL CONSTRUCTION

TABLE OF CONTENTS

DIVISION 13: SPECIAL CONSTRUCTION

134814 Sound Barriers

SECTION 134814

SOUND BARRIERS

GENERAL ***GUIDELINES***

1.1 SECTION INCLUDES

A. Qualitative requirements for sound barriers.

1.2 SYSTEM DESCRIPTION

A. Acoustical Performance: Sound absorbing panels shall have a mineral rock wool sound-absorbing batt between the perforated face and solid back panel. The rock wool is to be a minimum of 1/2 inch from the surface of the perforated panel and shall fill the panel cavity and be 2 inches thick. It shall have a density of 6-lbs. per cu.ft. and conform with ASTM standard E-136. The mineral rock wool sound-absorbing material shall absorb less than 1% water, be noncorrosive, melt about 2,000 Deg.F., have a flame spread of 15 or less and a smoke development of 0 when tested in accordance with ASTM standard E-84, be rated noncombustible by ASTM standard E-136, be non-hygroscopic, and have a NRC of 1.05.

1.3 MATERIALS

A. Panels shall be fabricated from 22 to 16 gauge sheet steel conforming to the structural quality of ASTM A-446 and galvanized in accordance with ASTM A-525, Class G-90. Each panel shall have a width of 12 inches and a thickness of 2 ¾ inches or 3 ¾ inches.

B. The individual panels shall be “nested” horizontally into structural members. The panels may be installed vertically or horizontally in heights up to 12 feet before intermediate girts may be required. Interior perforated side of panel is to be galvanized. Exterior panels are to be galvanized and finished with the following coil coating. The panel system can be galvanized or a combination of galvanized and pre-coated elements depending upon customer requirements; i.e., galvanized face panel and pre-coated back tray or pre-coated face panel and galvanized back tray.

END OF SECTION

THIS PAGE HAS BEEN INTENTIONALLY LEFT BLANK.

14 DIVISION

CONVEYING EQUIPMENT

TABLE OF CONTENTS

DIVISION 14: CONVEYING EQUIPMENT

142100	Electric Traction Elevators
142400	Hydraulic Elevators

SECTION 142100

ELECTRIC TRACTION ELEVATORS

GENERAL GUIDELINES

1.1 SECTION INCLUDES

A. Qualitative requirements for electric traction passenger elevators.

1.2 QUALITY ASSURANCE

A. Regulatory Requirements
1. ASME A17.1 "Safety Code for Elevators and Escalators."

1.3 COMPONENTS

A. Passenger Elevator Machines: Either variable-voltage, variable-frequency ac or variable-voltage dc type; with solid-state power converters.

B. Elevator Description:
1. Auxiliary Operations: Battery-powered lowering or standby powered lowering.
2. Security Features: Card-reader or keyswitch operation.
3. Car Enclosures:
a. Front Walls (Return Panels): Stainless Steel
b. Side and Rear Wall Panels: Plastic Laminate
c. Doors: Enameled Steel

C. Signal Equipment
1. Emergency communication system complying with ASME A 17.1 and the U.S. Architectural and Transportation Barriers Compliance Board's "American with Disabilities Act (ADA), Accessibility Guidelines for Buildings and Facilities (ADAAG)."

LEED SUGGESTIONS

2.1 Energy consumption is the primary environmental concern with elevators. Careful selection of elevator type, controllers, and machines can have a significant impact on elevator energy consumption. Electric traction elevators use far less energy than hydraulic elevators. Solid-state power conversion uses less energy than the motor generators of the past, VVVF ac systems use less energy than dc systems, and regenerative systems will reduce power consumption more than non-regenerative systems. Sophisticated microprocessor operation systems can reduce energy requirements through more efficient elevator system operation and may also reduce embodied energy by requiring fewer elevators. When life-cycle costs, rather than just initial costs, for elevator systems are considered, many of these energy-saving features will prove to be cost-effective.

END OF SECTION

SECTION 142400

HYDRAULIC ELEVATORS

GENERAL ***GUIDELINES***

1.1 SECTION INCLUDES

A. Qualitative requirements for hydraulic passenger elevators.

1.2 QUALITY ASSURANCE

A. Regulatory Requirements
1. ASME A17.1 “Safety Code for Elevators and Escalators.”

1.3 COMPONENTS

A. Pump Units: Mounted on oil tank in steel enclosure or submersible pump, suspended inside tank.
1. Motor: Solid-state starting.

B. Cylinder Protection: PVC or HDPE pipe casing.

C. Signal Equipment
1. Car Control Stations: Semi-recessed or recessed type, one per car.
2. Emergency Communication System must comply with ASME A 17.1 and ADAAG.

D. Elevator Description
1. Auxiliary Operations
a. Battery-Powered Lowering.
2. Security Features: Card-reader operation or keyswitch operation.
a. Front Walls (Return Panels): Stainless steel.
b. Side and Rear Wall Panels: Enameled steel or plastic laminate.
c. Doors: Enameled steel.
d. Ceiling: Luminous ceiling.
e. Handrails: Stainless steel.

END OF SECTION

21

DIVISION

FIRE SUPPRESSION

TABLE OF CONTENTS

DIVISION 21: FIRE SUPPRESSION

210501	Common Work Results for Fire Suppression
211000	Water-Based Fire-Suppression Systems

SECTION 210501

COMMON WORK RESULTS FOR FIRE SUPPRESSION

GENERAL GUIDELINES

1.1 SECTION INCLUDES QUALITATIVE REQUIREMENTS FOR:

A. Pipe and pipe fittings.

B. Dielectric fittings.

C. Mechanical sleeve seals.

D. Piping specialties.

E. Installation requirements common to piping systems and specification sections.

F. Installation requirements common to equipment specification sections.

G. Testing and repair.

H. Final completion.

I. Record drawings.

J. Maintenance and operating manuals.

K. Lubrication and packing.

L. Piping systems and equipment per NFPA, state, and local codes.

M. Requirements for a fire pump, jockey, controllers and equipment if required.

1.2 SUBMITTALS

A. Submittal data is required for dielectric fittings, flexible connectors, mechanical sleeve seals, and piping specialties.

B. Refer to specific sections of this specification for additional submittal requirements.

1.3 QUALITY ASSURANCE

A. Any manufacturer other than basis of design shall be responsible for any additional requirements for electrical service, physical space limitations, and capacities at no additional cost to the project.

B. Materials and installation shall comply with requirements of governing regulations and controlling agencies.

C. All materials used shall be first grade of their kind and shall be new and in first-class condition when installed.

D. Work done by the Contractor shall include the services of an experienced superintendent.

1.4 DELIVERY, STORAGE, AND HANDLING

A. Piping and tubing shall include factory-applied end caps.

B. All piping and tubing shall be elevated from grade for onsite storage.

C. Protect flanges, fittings, and piping specialties from moisture and dirt.

D. Protect fire pump, jockey pump and controllers from moisture and dirt.

1.5 SEQUENCING AND SCHEDULING

A. Coordinate equipment installation with other building components.

B. Arrange for pipe spaces, chases, slots, and openings in the building structure during progress of construction.

C. Coordinate installation sleeves and supporting devices with concrete and structural components.

D. Coordinate connection of piping systems with underground and overhead utilities and services.

E. Coordinate requirements for access panels and doors.

F. Coordinate installation of identifying devices.

1.6 PROJECT CONDITIONS

A. Piping support shall only be permitted at steel joist panel points.

B. Any supplemental steel required for support between building structural members shall be the responsibility of the Div. 21 Contractor.

1.7 PIPE, TUBE, AND FITTINGS

A. Refer to individual Division 21 piping sections for pipe, tube, and fitting materials and joining methods.

1.8 JOINING MATERIALS

A. Refer to individual Division 21 piping sections for special joining materials not listed below.

1.9 DIELECTRIC FITTINGS

A. Fittings shall be zinc plated with a thermoplastic liner, rated for 250 degrees F maximum.

1.10 MECHANICAL SLEEVE SEALS

A. Seals shall be designed with interlocking rubber links shaped to continuously fill annular space between pipe and sleeve and shall include connecting bolts and pressure plates.

1.11 PIPING SPECIALTIES

A. Piping sleeves shall be constructed of galvanized sheet metal or steel pipe. Steel pipe shall meet requirements of ASTM A 53, Type E, Grade A, Schedule 40. Sleeves for copper piping shall be of compatible material to prevent interaction of piping materials.

B. Escutcheons shall be manufactured wall, ceiling, and floor plates, split-type, and of heavy chrome-plated construction.

1.12 PIPING SYSTEMS - COMMON REQUIREMENTS

A. Division 21 piping section specifies unique installation requirements.

B. Install components with pressure rating equal to or greater than system operating pressure.

C. Install all piping at right angles or parallel to the building walls. Diagonal runs are prohibited.

D. Install piping tight to slabs, beams, joists, columns, walls, and other building elements. Allow sufficient space above removable ceiling panels to allow for panel removal.

E. Install all piping specialties to meet manufacturer's requirements.

F. Install pipe sleeves at all wall penetrations. Provide Schedule 40 steel pipe.
   1. PVC pipe sleeves are not permitted.
   2. Do not install sleeves through structural members.

G. Maintain fire rating at fire wall penetrations through the use of approved fire sealant materials installed in pipe sleeve.

1.13 EQUIPMENT INSTALLATION - COMMON REQUIREMENTS

A. Install equipment to facilitate service, maintenance, and repair or replacement of components.

B. Maintain lubrication gaskets and packing during construction and assure that at time of acceptance by the Owner, equipment is in first-class operating condition.

1.14 EQUIPMENT START-UP

A. Start-up of all fire pump equipment shall be video-taped by the Div 21 contractor. Two DVD copies shall be turned over to the Owner's maintenance staff.

1.15 TESTING AND REPAIR

A. All piping systems shall be throughly cleaned and flushed prior to final testing.

B. Pressure testing shall be completed for the piping systems:

C. All testing must be witnessed and accurately recorded noting methods of testing, times, dates, and results.

D. Any damage as a result of tests shall be repaired or damaged materials replaced at no cost to the Owner.

1.16 FINAL COMPLETION

A. All work shall be cleaned prior to issuance of Substantial Completion.

B. Retouch or repaint factory painted prime and finish coats where scratched or damaged.

C. Deliver extra sprinkler heads as required by this Specification, to Owner and obtained signed receipts of delivery.

D. Clean equipment, restore damaged materials, and leave the Work in acceptable condition.

E. Remove all site tools, equipment, surplus materials and rubbish continuously at no additional cost to the Owner.

F. Contractor shall submit written certificates warranting each item of equipment.

1.17 RECORD DRAWINGS

A. The Contractor shall keep a running record of each change and deviation from the Drawings on a clean and undamaged set of Drawings.

B. The final Project Record Drawings shall be submitted to the Engineer for approval at the completion of the project.

C. Record Drawings shall include the location of concealed piping and ductwork.

1.18 MAINTENANCE AND OPERATING MANUALS

A. The Maintenance and Operating Manuals shall comply with other Sections of this Specification. Submit in triplicate for inclusion in Maintenance and Operating Manuals.

B. Bind the written operating instructions, approved shop drawings, equipment catalog cuts, equipment warranties, and manufacturer's instructions into a binder.

END OF SECTION

SECTION 211000

WATER-BASED FIRE SUPPRESSION SYSTEMS

GENERAL GUIDELINES

1.1 SECTION INCLUDES

A. Qualitative requirements for piping systems, sprinkler equipment, fire pumps, controls, tank and accessories, standpipes/hose cabinets, and double detector check valves.

1.2 SUBMITTALS

A. Submittals are required and shall include product data noting materials, sizes, and materials. Submit hydraulic calculations and drawings showing the sprinkler piping layout with the sprinkler designer's registration seal.

1.3 QUALITY ASSURANCE

A. Piping shall be installed per NFPA 13, state and local fire codes.

B. Testing of the piping shall be per NFPA 13.

C. Sprinkler heads shall be UL and FM labeled and shall be located on spacing requirements as noted in NFPA 13 according to the hazard designation. Extended coverage sprinkler heads are acceptable.

D. Fire pumps shall be UL and FM labeled.

E. Stand pipes and hose cabinets shall be provided per NFPA 14, state and local codes.

F. Backflow preventers shall meet the current requirements of ASSE 1015, ASSE 1047 and/or ASSE 1048.

1.4 PIPING SYSTEMS

A. Piping to include schedule 40 black steel and/or schedule 10 thin wall steel.

B. Grooved piping with ductile iron couplings and EPDM gasket may be used in lieu of threaded pipe.

C. An option to the final connection to the sprinkler head shall be flexible braided stainless steel hose assembly per UL, FM, and NFPA 13 requirements.

1.5 SPRINKLER EQUIPMENT

A. The types of heads shall be used in the following locations;
   1. Unfinished exposed spaces and mechanical spaces - brass heads.
   2. Finished spaces with ceilings – concealed or semi recessed heads.
   3. Finished spaces in storage rooms and janitor closets - white pendent heads.
   4. Corridors, locker/shower rooms, restrooms - concealed white head assemblies.
   5. Heads in the gym shall have wire guards.
   6. If heads are exposed in the locker/shower rooms, use a wire guard on each head.

B. Provide vane type water flow indicator with tamper switch and electronic retard.

C. Provide valve position supervisory switch for monitoring all valves.

D. Provide test station with valve and drain assembly for testing sprinkler system.

E. Provide a fire department siamese connection on the exterior of the building or a free standing siamese post for connection to the building sprinkler system.

F. Provide a wall indicator wall or post indicator valve for shutoff of the sprinkler system supply. The valve shall be supervised with a tamper switch.

1.6 FIRE PUMPS, CONTROLS, AND ACCESSORIES

A. Provide a UL labeled fire pump, controls and accessories.

B. The fire pump shall be [vertical turbine] [horizontal split case] [vertical in line] fire pump.

C. Power to the pump shall be [limited service electric motor] [shaft coupled diesel engine].

D. Controls shall be for a limited service motor.

E. A transfer switch shall be provided if there is more than one power supply feeding the fire pump.

F. The jockey pump shall be provided to pressurize the piping system for detection of a head activating by a fire or by a trouble condition.

G. In the case of a condition where a local water supply must be provided, a tank or tanks shall be installed to provide an adequate amount of water to fight a fire based on NFPA 13 requirements for the flow rate and duration based on the hazard designation. Types of tanks shall include concrete or fiberglass. Level controls shall be installed in the tank to maintain the water level and indicate an alarm for an inadequate water supply.

1.7 STANDPIPES/HOSE CABINETS

A. Cabinets on the stage shall be surface mounted.

1.8 DOUBLE DETECTOR CHECK VALVES

A. The double detector check valve assembly shall consist of two spring loaded double check valves, with a cast iron body with epoxy lining or stainless steel body UL and FM approved. Provide a detector water meter if required by the local fire authority. Provide inlet and outlet resilient seated O.S. & Y. gate valves. Provide bypass piping with test cocks. Provide inlet and outlet pressure gauges.

1.9 INSTALLATION

A. Piping shall be installed from approved hangers located at steel joist panel points.

B. When required by inadequate water pressure and flow conditions, furnish and install the fire pump, jockey pump, controls, transfer switch and required piping.

C. Piping in gymnasiums shall be above the bottom chords of the roof structure.

D. Heads in the corridors shall be centered between the corridor walls. All others heads in the finished spaces with ceilings shall be located within 6 inches of the ceiling grid.

E. Install double detector check assembly with water meter on the incoming water supply to the sprinkler system.

F. Clean pipe to prevent MIC (microbially influenced corrosion).

END OF SECTION

THIS PAGE HAS BEEN LEFT INTENTIONALLY BLANK.

22 DIVISION

PLUMBING

TABLE OF CONTENTS

DIVISION 22: PLUMBING

220501	Common Work Results for Plumbing
220519	Meters and Gages for Plumbing Piping
220533	Electric Self-Regulating Hot Water Temperature Maintenance Cable
221116	Domestic Water Piping System
221119	Plumbing Piping Specialties
221123	Plumbing Pumps and Accessories
221316	Sanitary Piping System
221323	Grease/Oil/Acid Interceptors
221413	Storm Piping System
221500	Compressed Air System
223100	Domestic Water Softener Equipment
223200	Domestic Water Filtration Equipment
223400	Domestic Water Heating Systems
224000	Plumbing Fixtures
226313	Gas Piping Systems

SECTION 220501

COMMON WORK RESULTS FOR PLUMBING

GENERAL GUIDELINES

1.1 SECTION INCLUDES QUALITATIVE REQUIREMENTS FOR:

A. Pipe and pipe fittings.

B. Dielectric fittings.

C. Mechanical sleeve seals.

D. Piping specialties.

E. Installation requirements common to piping systems and specification sections.

F. Installation requirements common to equipment specification sections.

G. Testing and repair.

H. Final completion.

I. Record drawings.

J. Maintenance and operating manuals.

K. Lubrication and packing.

1.2 SUBMITTALS

A. Submittal data is required for dielectric fittings, flexible connectors, mechanical sleeve seals, and piping specialties.

B. Refer to specific sections of this specification for additional submittal requirements.

1.3 QUALITY ASSURANCE

A. Any manufacturer other than basis of design shall be responsible for any additional requirements for electrical service, physical space limitations, and capacities at no additional cost to the project.

B. Materials and installation shall comply with requirements of governing regulations and controlling agencies.

C. All materials used shall be first grade of their kind and shall be new and in first-class condition when installed.

D. Work done by the Contractor shall include the services of an experienced superintendent.

1.4 DELIVERY, STORAGE, AND HANDLING

A. Piping and tubing shall include factory-applied end caps.

B. All piping, tubing, and equipment shall be elevated from grade for on-site storage.

C. Protect flanges, fittings, and piping specialties from moisture and dirt.

D. Store plastic piping protected from direct sunlight. Support to prevent sagging and bending.

1.5 SEQUENCING AND SCHEDULING

A. Coordinate mechanical equipment installation with other building components.

B. Arrange for pipe spaces, chases, slots, and openings in the building structure during progress of construction.

C. Coordinate installation sleeves and supporting devices with concrete and structural components.

D. Coordinate connection of plumbing systems with underground and overhead utilities and services.

E. Coordinate requirements for access panels and doors.

F. Coordinate installation of identifying devices.

1.6 PROJECT CONDITIONS

A. Piping support shall only be permitted at steel joist panel points unless noted otherwise.

B. Any supplemental steel required for support between building structural members shall be the responsibility of the Plumbing Contractor.

1.7 PIPE AND PIPE FITTINGS

A. Pipe threads shall meet ASME B1.20.1 for factory-threaded pipe and pipe fittings.

B. Pipe-flange gasket materials shall meet ASME B16.21, nonmetallic, flat, asbestos-free.

C. Pipe Flanges
1. Full face shall be Class 125, cast iron and cast-bronze material.
2. Narrow face shall be Class 250, cast-iron and cast steel material.

D. Flange bolts and nuts shall meet ASME B18.2.1.

E. Solder filler materials shall meet ASTM B 32.
1. Alloy Sn95 and Sn94 shall be used.

F. Brazing filler materials shall meet AWS A5.8.

G. Welding filler metals shall comply with AWS D10.12.

H. Solvent materials shall meet standard solvent cement requirements.
   1. PVC piping shall meet ASTM D 2564. Include primer according to ASTM F 656.
   2. Plastic pipe seals shall meet ASTM F 477
   3. Flanged, ductile-iron gasket, bolts, and nuts shall meet AWWA C 110.

1.8 DIELECTRIC FITTINGS

A. Fittings shall be zinc plated with a thermoplastic liner, rated for 250 degrees F maximum.

1.9 MECHANICAL SLEEVE SEALS

A. Seals shall be designed with interlocking rubber links shaped to continuously fill annular space between pipe and sleeve and shall include connecting bolts and pressure plates.

1.10 PIPING SPECIALTIES

A. Piping sleeves shall be constructed of galvanized sheet metal or steel pipe. Steel pipe shall meet requirements of ASTM A 53, Type E, Grade A, Schedule 40. Sleeves for copper piping shall be of compatible material to prevent interaction of piping materials.

B. Escutcheons shall be manufactured wall, ceiling, and floor plates, split-type, and of heavy chrome-plated construction.

1.11 PLUMBING PIPING SYSTEMS - COMMON REQUIREMENTS

A. Division 22 piping sections specify unique installation requirements.

B. Install components with pressure rating equal to or greater than system operating pressure.

C. Install all piping at right angles or parallel to the building walls. Diagonal runs are prohibited.

D. Install piping tight to slabs, beams, joists, columns, walls, and other building elements. Allow sufficient space above removable ceiling panels to allow for panel removal.

E. Install all piping specialties to meet manufacturer's requirements.

F. Install pipe sleeves at all wall penetrations. Provide Schedule 40 steel pipe.
   1. PVC pipe sleeves are not permitted.
   2. Do not install sleeves through structural members.

G. Maintain fire rating at fire wall penetrations through the use of approved fire sealant materials installed in pipe sleeve.

H. Install unions in piping 2 inch and smaller adjacent to each valve and at final connection to each piece of equipment.

I. Install flanges in piping 2-1/2 inch and larger adjacent to flanged valves and at final connections to equipment with flanged pipe connections.

1.12 EQUIPMENT INSTALLATION - COMMON REQUIREMENTS

A. Install equipment to facilitate service, maintenance, and repair or replacement of components.

B. Maintain lubrication gaskets and packing during construction and assure that at time of acceptance by the Owner, equipment is in first-class operating condition.

1.13 EQUIPMENT START-UP

A. Start-up of all plumbing equipment shall be video-recorded by the plumbing contractor. Two DVD copies shall be turned over to the Owner's maintenance staff.

1.14 TESTING AND REPAIR

A. All piping and ductwork systems shall be throughly cleaned and flushed prior to final testing.

B. Pressure testing shall be completed for the following piping systems:
   1. Domestic water, sanitary and vent, storm and gas piping systems, and other systems as noted on the plans.

D. All testing must be witnessed and accurately recorded noting methods of testing, times, dates, and results.

E. Any damage as a result of tests shall be repaired or damaged materials replaced at no cost to the Owner.

1.15 FINAL COMPLETION

A. All work shall be cleaned prior to issuance of Substantial Completion.

B. Retouch or repaint factory painted prime and finish coats where scratched or damaged.

C. Deliver any equipment as required by this Specification to Owner and obtained signed receipts of delivery.

D. Clean equipment, restore damaged materials, and leave the Work in acceptable condition.

E. Remove all site tools, equipment, surplus materials and rubbish continuously at no additional cost to the Owner.

F. Contractor shall submit written certificates warranting each item of equipment.

1.16 RECORD DRAWINGS

A. The Contractor shall keep a running record of each change and deviation from the Drawings on a clean and undamaged set of Drawings.

B. The final Project Record Drawings shall be submitted to the Engineer for approval at the completion of the project.

C. Record Drawings shall include the location of all piping systems.

1.17 MAINTENANCE AND OPERATING MANUALS

A. The Maintenance and Operating Manuals shall comply with other Sections of this Specification. Submit in triplicate for inclusion in Maintenance and Operating Manuals.

B. Bind the written operating instructions, approved shop drawings, equipment catalog cuts, equipment warranties, and manufacturer's instructions into a binder.

END OF SECTION

THIS PAGE HAS BEEN INTENTIONALLY LEFT BLANK.

SECTION 220519

METERS AND GAGES FOR PLUMBING PIPING

GENERAL GUIDELINES

1.1 SECTION INCLUDES

A. Qualitative requirements for thermometers and fittings, as well as pressure gauges and fittings.

1.2 SUBMITTALS

A. Submittals are required and shall include product data noting materials, sizes, and dimensions.

1.3 COMPONENTS

A. Thermometers: 1-percent accuracy.
1. Liquid-in-Glass Type: Organic filled 9 inch long industrial type.
2. Direct-Mounting Filled-System Dial Type: Vapor actuated, thermal bulb, precision brass gear.
3. Remote-Reading, Filled-System Dial Type: Vapor actuated, thermal bulb; precision brass gear.
4. Bimetal Dial Type: Direct mounting, bimetal coil.
5. Insertion Dial Type: Bimetal coil.

B. Pressure Gauges: Phosphor-bronze Bourdon-tube gages, 1-percent accuracy.
1. Vacuum Range: 30 inches Hg of vacuum to 15 psig of pressure .
2. Pressure Range: Two-times operating pressure.

1.4 INSTALLATION

A. Provide thermometers at the following locations:
1. Inlet and outlet domestic water heaters.
2. Outlet of the hot water storage tank.
3. Inlet and outlet hot water at the main thermostatic mixing valve.
4. Domestic circulation pump outlet.

B. Provide pressure gauges at the following locations:
1. Outlet piping of each water heater with 200 MBH input or greater.
2. Inlet and outlet of the main reduced pressure backflow preventer.

END OF SECTION

SECTION 220533

ELECTRIC SELF-REGULATING HOT WATER TEMPERATURE MAINTENANCE CABLE

GENERAL GUIDELINES

1.1 SECTION INCLUDES

A. Qualitative requirements for hot water maintenance cable.

1.2 SUBMITTALS

A. Submittals are required and shall include product data noting materials, sizes, and dimensions.

1.3 QUALITY ASSURANCE

A. Follow manufacturer's requirements for installation.

B. Cable shall be UL listed, CSA certified and FM approved.

C. Cable system shall conform to ANSI/IEEE Standard 515.1.

D. Cables designed for freeze protection of water lines will not be allowed.

1.4 WARRANTY

A. Cable – Minimum 10 year warranty.

B. Follow manufacturer's installation and testing requirements.

1.5 MAINTENANCE CABLE

A. The self-regulating cable shall consist of (2) nickel-coated copper bus wires embedded in a radiation cross-linked conductive polymer core. The cable shall be capable of varying its heat output along its entire length to maintain the water in the selected temperature range.

B. Provide electronic controller for temperature control and energy savings.

1.6 INSTALLATION

A. Refer to the manufacturer's hot water temperature maintenance design guide for design details, insulation requirements, maximum circuit lengths, and accessory information.

B. The cable shall not be installed in a concealed space.

END OF SECTION

SECTION 221116

DOMESTIC WATER PIPING SYSTEM

GENERAL GUIDELINES

1.1 SECTION INCLUDES

A. Qualitative requirements for domestic water piping.

1.2 SUBMITTALS

A. Submittals are required and shall include product data noting materials, sizes, and dimensions.

1.3 QUALITY ASSURANCE

A. Follow manufacturer's requirements for installation.

B. Welding procedures per ANSI/ASME Section 9, AWS D10.9 and D1.1 and the National Certified Pipe Welding Bureau.

C. Brazing procedures per ANSI B31.5 and the ASME Boiler and Pressure Vessel Code SFA-5.8, Section II.

D. Soldering procedures per ANSI B16.18.

E. Comply with ANSI B31 pressure code for pressure piping.

1.4 PLUMBING PIPING

A. Domestic water piping (hot water, cold water, hot water return) shall be type L copper conforming to ASTM B88. Fittings shall be wrought copper conforming to ANSI B16.22.
   1. Grooved copper piping with ductile iron or bronze couplings and EPDM gasket may be used as an option.
   2. Copper press fittings may be used as an option per ASTM B16.18 or ASTM B16.22. O-Rings shall be EPDM.

B. An option to A. for domestic hot and cold water shall be as follows:
   1. Cross linked polyethylene (PEX) plastic tubing per ASTM F876,F877. Installed in a conduit or sleeve***, if under slab.***
   2. Polypropylene Schedule SDR 7.4 and ***SDR*** 11 meeting NSF14, 61 and 51. Piping shall also meet ASTM F2389 and Plumbing Code Chapter 605. Piping installed in air plenums shall have a Foil Wrap to meet the 25/50 smoke and fire ratings for plenum spaces. Follow manufacturer's instructions for installation and hanger requirements. Verify expansion requirements.

1.5 INSTALLATION

A. Provide pipe and tube of type, joint type, size and weight (wall thickness or class) indicated for cold water, hot water, and hot water return.

END OF SECTION

SECTION 221119

DOMESTIC WATER PIPING SPECIALITIES

GENERAL GUIDELINES

1.1 SECTION INCLUDES

A. Qualitative requirements for vacuum breakers, backflow preventers, plumbing thermostatic mixing valves, strainers, outlet boxes, hose bibbs, wall hydrants, water hammer arresters, trap-seal primer systems, domestic hot water return balancing device (manual), and clothes washer connection.

1.2 SUBMITTALS

A. Submittals are required and shall include product data noting materials, sizes, and dimensions.

1.3 QUALITY ASSURANCE

A. Vacuum breaker wall hydrants and freeze resistant wall hydrants shall meet ASSE Standard 1019.

B. Provide backflow prevention devices wherever possible sources of undesirable materials are connected to the potable water system.

C. The backflow prevention devices shall meet the standards set by the American Society of Sanitary Engineers and the latest edition of the Plumbing Code and air gap standards under American National Standards Institute A112.1.2-1943(1979).

D. The backflow prevention devices shall be approved for use by the Foundation for Cross-Connection Control and Hydraulic Research at the University of Southern California.

E. Atmospheric vacuum breaker per ANSI/ASTM 1020.

F. Hose connection vacuum breaker per ASSE 1011 and CSA B64.2.

G. Reduced pressure vacuum breaker per ASSE 1013, AWWA C511, CSA B64.5.

H. Pressure type backflow preventer per ANSI/ASSE 1035.

I. Dual check valve per ANSI/ASSE 1024, CSA B64.6.

J. Thermostatic mixing valves shall meet the Ohio Plumbing Code and the requirements of ASSE 1017.

K. Strainers shall meet NSF 61 and ASTM B 62.

L. Hose bibbs and wall hydrants shall meet ASSE 1019.

M. Water hammer arresters shall meet ANSI/ASME A112.26.1M and ASSE 1010.

N. Trap seal primers shall meet ASSE 1018.

O. Clothes washer connection shall meet ANSI/ASSE 1035.

P. Emergency mixing valves shall meet ANSI 2.358.1-1998.

1.4 COMPONENTS

A. Atmospheric vacuum breaker shall have brass body, stainless steel working parts, integral strainer, rubber discs, maximum pressure, maximum 175 psi operation, unions.

B. Hose connection vacuum breaker shall have ¾ inch female hose inlet connection, ¾ inch male outlet connection, non-removal feature, plain brass finish.

C. Reduced pressure backflow preventer shall have fused epoxy coated cast iron check valve body and relief valve, replaceable bronze seats, bronze ball check valve test cocks, maximum 175 psi operation, stainless steel internal parts, air gap connection for relief piping to drain.

D. Pressure type backflow preventer shall have atmospheric vent, all brass construction, in-line continuous operation, maximum 125 psi operation.

E. Dual check valve shall have straight line poppet type check modules, replaceable seats, brass construction.

F. Water Hammer Arresters: Shall be the stainless steel bellow type.

G. Balancing devices shall be bronze with adjustable control.

H. Domestic hot water anti-scald thermostatic mixing control valve unit shall include swivel action check stops, removable cartridge with strainer, stainless steel piston and liquid fill thermal motor with bellows element mounted out of water. The mixing valve shall control the domestic hot water temperature distributed throughout the building. The mixing valve shall have a thermostatic sensing unit. The mixing valve shall fail to the cold water side. Flow rate shall determine whether a single valve shall be required or a high/low valve with pressure reducing valves is required to provide the correct temperature at the minimum and maximum hot water flow in the building.

I. Strainers: Shall be bronze threaded, flanged, or soldered.

J. Outboxes: Shall be recessed with pressure backflow preventer.

K. Hose bibbs and Wall Hydrants: Shall be recessed or surface with vacuum breakers.

L. Exterior Wall Hydrants: Shall be non-freeze, self-draining with copper/bronze construction with recessed wall box with loose key.

M. Clothes Washer Connection Box and Refrigerator Supply: Metal recessed box complete with hot and/or cold water shut-off valves and drain connection.

N. Emergency thermostatic mixing valve: shall be liquid or bi-metal thermostats, cold water bypass, high limit stop, locked temperature regulator.

1.5 INSTALLATION

A. Provide vacuum breakers on all threaded hose bibb connections.

B. Install reduced pressure principle backflow preventer in irrigation and incoming domestic water service.

C. Install pressure type vacuum breakers in lines under continuous pressure and at least 12 inches above the highest outlet downstream of the unit.

D. Provide drain line from reduced pressure backflow preventer discharge outlet; extend to nearest drain.

E. Units shall be installed in strict accordance with manufacturer's written instructions.

F. Test each backflow device and submit test data.

G. Provide thermostatic mixing valves to regulate the hot water temperature to a fixture.

H. Provide a recessed washer box ***at*** each domestic clothes washer.

I. Provide a recessed box to supply water to each refrigerator.

J. Wall hydrants with hose connections shall be provided in the mechanical room and boiler room.

K. Provide a water hammer arrestor at each solenoid valves or piece of equipment that has a quick closing type valve. Water hammer arrester for down-feed risers to be at top of riser. Size shock absorber according to fixture unit count. Provide shock absorbers at each group of water closets and urinals. Shock absorber shall be easily accessible for repair or replacement.

L. Provide trap seal primers on all floor drains to prevent trap seals from drying up.

M. Provide emergency thermostatic mixing valve with inlet and outlet thermometers to regulate tempered water to the emergency eye wash and/or showers.

END OF SECTION

SECTION 221123

PLUMBING PUMPS AND ACCESSORIES

GENERAL GUIDELINES

1.1 SECTION INCLUDES

A. Qualitative requirements for recirculation pumps and water pressure booster pump system.

1.2 SUBMITTALS

A. Submittals are required and shall include capacities, warranties, product data noting materials, sizes, and dimensions.

B. Pressure booster system panel shall be UL listed and labeled.

1.3 QUALITY ASSURANCE

A. Each pump shall be capable of providing the scheduled flow in gpm and head required.

B. Pump motors shall be high efficiency type.

C. All three-phase motors shall be protected with phase loss protection. Protection shall be provided by the electrical system, by built-in protection, or by protection built into a variable frequency drive.

1.4 RECIRCULATION PUMPS

A. The pump shall be all bronze, horizontal in line, oil lubricated, and 125 psi working pressure.

B. Aquastat with voltage thermostat shall start/stop pump or start/stop by the temperature control system.

1.5 WATER PRESSURE BOOSTER PUMP SYSTEM

A. The pump system shall consist of two pumps providing a constant water pressure to the piping system. The control system shall provide alternation of the pumps, on/off operation and an alarm system.

B. Provide expansion pressure tank with a bladder insert for storage capacity required, sized accordingly to meet flow requirements.

1.6 INSTALLATION

A. Provide the correct gpm, head and voltage required.

1. Inlet piping shall consist of a line size valve and strainer. Outlet piping shall consist of a line size check valve and valve.
2. The pump shall be supported by the inlet and outlet piping.

B. Pressure Booster System

1. Install the pressure booster pump system according to the manufacturer's recommendations. Provide inlet and outlet piping and valves. Install the expansion tank with size as required.

END OF SECTION

SECTION 221316

SANITARY PIPING SYSTEM

GENERAL GUIDELINES

1.1 SECTION INCLUDES

A. Qualitative requirements for sanitary piping and vent, as well as acid waste piping and vent.

1.2 SUBMITTALS

A. Submittals are required and shall include product data noting materials, sizes, and dimensions.

1.3 QUALITY ASSURANCE

A. Follow manufacturer's requirements for installation.

B. Obtain list of Owner's chemicals to review against pipe material chemical resistance chart for acid waste piping.

1.4 SANITARY AND VENT PIPING

A. Sanitary and vent piping materials below slab

1. Schedule 40 PVC with solvent joints per ASTM D2665, D2564, D2665.
2. Cast iron hub and spigot per ASTM A74 and C 564.

B. Sanitary and vent piping above finish floor.

1. Schedule 40 PVC with solvent joints per ASTM D2665, D2564, D2665.
2. Cast iron no hub and fittings per ASTM.

C. Sanitary and vent piping above ceiling in plenum space

1. Cast iron no hub and fittings per ASTM.
2. PVC piping is not permitted in a return air plenum or in a chase exposed to the plenum.

D. Acid waste piping below slab and above slab.

1. Schedule 40 polypropylene per ASTM D4101 and ASTM 3311.
2. Schedule 40 CPVC with solvent joints per ASTM D1784, F493, F441, D3311, and NSF Standard 14.

E. Acid waste piping in plenum space and chases open to plenums

1. Schedule 40 polyvinylidene fluoride per ASTM D3222 or glass per ASTM C1053-90.

F. Underground waste and vent piping in kitchen space.

1. Cast iron hub and spigot.

1.5 INSTALLATION

A. Terminate vent piping through roof, a minimum of 12 inches above the roof.

B. Location of vent on the roof shall be a minimum of 20 feet from any rooftop or wall louver outside air intake or rooftop HVAC equipment outside air intake.

END OF SECTION

SECTION 221323

GREASE/OIL/ACID INTERCEPTORS

GENERAL GUIDELINES

1.1 SECTION INCLUDES

A. Qualitative requirements for grease interceptors, solids interceptors, clay traps, and acid waste neutralizing sumps.

1.2 SUBMITTALS

A. Submittals are required and shall include product data noting materials, sizes, and dimensions.

1.3 QUALITY ASSURANCE

A. Grease interceptors, solid interceptors, and clay traps shall meet the latest edition of PDI Seal of Approval and Ohio Plumbing Code.

B. Acid sump shall meet Ohio Plumbing Code.

1.4 GREASE INTERCEPTORS

A. The interceptor shall be a minimum of 500 gallons, constructed of concrete, cast iron, or fiberglass. Verify size with local health authority.

B. Provide cleanouts at each end of the tank with access up to grade.

C. Provide access to grade, using a 2'-0" diameter concrete collar with a cast iron frame and lid, 4 inches above finish grade.

1.5 SOLIDS INTERCEPTORS

A. Interceptors shall be acid resistant coated fabricated steel, heavy duty cover. Provide extension to finish floor as required.

1.6 CLAY TRAPS

A. Clay trap shall be acid resistant coated fabricated steel, stainless steel mesh screen basket, gasketed cover.

1.7 ACID NEUTRALIZING SUMP

A. Tank shall be polypropylene or HDPE with bolt down gasketed lid, inlet and outlet piping, vent, flanged connections.

B. Provide access to grade, using a 5'-0" diameter concrete or corrugated metal collar with a cast iron frame and lid in a 6 inch thick reinforced concrete cover, 4 inches above finish grade.

C. A single 5 gallon sump can be specified for a single sink requiring acid neutralization.

1.8 GREASE INTERCEPTORS

A. Provide a minimum of 2'-0" cover over the tank.

B. Set tank on a 6 inch bed of compacted granular material. Backfill around the tank to within 12 inches of grade with compacted granular material.

C. The interceptor shall be located on the exterior of the building, 10'-0" minimum distance from the building.

D. Do not locate the interceptor in a drive area without providing adequate support over the tank.

E. Vent the interceptor into the building, up through the roof.

1.9 SOLIDS INTERCEPTORS

A. Piping invert under the floor to the tank will determine if an extension of the interceptor will be required to meet finish floor elevation.

B. Provide adequate clearance above the lid for cleaning and basket removal.

C. The interceptor can be located on or in the floor slab.

D. Provide access to the lid for cleaning.

1.10 CLAY TRAPS

A. Provide adequate clearance above the lid for cleaning and basket removal.

B. If the trap is installed within the casework, set on floor inside the base cabinet. Adjust the outlet piping extending to the wall to meet the invert.

C. Cleaning of the trap shall not constitute removal of the trap.

D. Piping connections shall have unions.

1.11 ACID NEUTRALIZING SUMP

A. Set basin on a 6 inch concrete slab, with the diameter the same as the outside diameter of the collar.

B. Provide stone around the basin, to just below the lid.

C. The access lid shall allow the removal of the basin lid. Size accordingly.

D. The lid and frame shall be set in a 6 inch concrete lid, 12 inches in diameter larger than the collar.

E. Fill the sump with water and the required amount of limestone chip, with size as recommended by the manufacturer.

F. Piping connections to the tank shall be flanged.

G. The sump shall be located on the exterior of the building, 10'-0" minimum distance from the building.

H. Do not locate the interceptor in a drive area without providing adequate support over the tank.

I. Vent the acid sump into the building, up through the roof.

1.12 SINGLE AND NEUTRALIZING SUMP (1 sink)

A. Provide adequate clearance above the lid for cleaning and basket removal.

B. If the trap is installed within the casework, set on floor inside the base cabinet. Adjust the outlet piping extending to the wall to meet the invert.

C. Cleaning of the sump shall not constitute removal of the trap.

D. Fill sump with water and limestone chips.

E. Piping connections shall have unions.

END OF SECTION

SECTION 221413

STORM PIPING SYSTEM

GENERAL GUIDELINES

1.1 SECTION INCLUDES

A. Qualitative requirements for storm piping.

1.2 SUBMITTALS

A. Submittals are required and shall include product data noting materials, sizes, and dimensions.

1.3 QUALITY ASSURANCE

A. Follow manufacturer's requirements for installation.

1.4 STORM PIPING

A. Storm piping materials below slab
   1. Schedule 40 PVC with solvent joints per ASTM D2665, D2564, D2665.
   2. Cast iron hub and spigot per ASTM A74 and C 564.

B. Storm piping above finish floor.
   1. Schedule 40 PVC with solvent joints per ASTM D2665, D2564, D2665.
   2. Cast iron no hub and fittings per ASTM.

C. Storm piping above ceiling in plenum space
   1. Cast iron no hub and fittings per ASTM.
   2. PVC piping is not permitted in a return air plenum or in a chase exposed to the plenum.

1.5 INSTALLATION

A. Connect to roof drains and/or secondary roof drains as required.

END OF SECTION

SECTION 221500

COMPRESSED AIR SYSTEM

GENERAL GUIDELINES

1.1 SECTION INCLUDES
A. Qualitative requirements for compressed air piping, compressor, regulator, and air dryer.

1.2 SUBMITTALS
A. Submittals are required and shall include product data noting materials, sizes, and dimensions.

1.3 QUALITY ASSURANCE
A. Follow manufacturer's requirements for installation.

B. Comply with ANSI B31 pressure code for pressure piping.

1.4 COMPRESSED AIR PIPING
A. Compressed air piping shall be galvanized steel, schedule 40, per ASTM A53. Fittings shall be threaded, class 150 per ASME A733 and B1.20.1.

1.5 AIR COMPRESSOR
A. Provide single or two stage air compressor as required by air pressure requirements.

B. Provide vibration isolation.

C. Consider noise factor as to where compressor is placed.

D. Provide ASME constructed air tank.

E. Provide air cooled after cooler.

F. Provide inlet and outlet valves, unions, and flexible connections.

1.6 AIR REGULATOR
A. Provide quick disconnect hoses.

B. Provide valve to each drop.

1.7 AIR DRYER
A. Provide air dryer to match air compressor CFM.

B. Provide refrigerated unit with high temperature inlet capabilities.

C. Provide inlet and outlet valves, unions, and flexible connections.

1.8 INSTALLATION
A. Branch air connection shall connect to the top of the air main.

B. Provide proper CFM air regulator to match system use.

END OF SECTION

SECTION 223100

DOMESTIC WATER SOFTENER EQUIPMENT

GENERAL GUIDELINES

1.1 SECTION INCLUDES

A. Qualitative requirements for the water softener system.

1.2 SUBMITTALS

A. Submittals are required and shall include product data, noting materials, sizes, and dimensions.

1.3 QUALITY ASSURANCE

A. The water softener shall meet with the approval of the OEPA when installed in association with a water well.

B. The softener shall be sized to meet the requirements concerning the amount of water to be softened between regenerations based on the grains hardness.

1.4 WATER SOFTENER SYSTEM

A. The tank shall be fiberglass, rated for 100 psi working pressure.

B. The backwash distributor shall be of the radial hub design.

C. The control valve shall initiate regeneration, backwash, rinse, brine draw and brine tank refill. Initiation of the regeneration sequence shall be by a volumetric water meter coupled to a timer control, preset at a specific gallons used. The timer will not let the regeneration begin until a preset time.

D. The mineral tank will be provided with a correct amount of resin, having a minimum exchange rate of 30,000 grains when regenerated with 15 lbs of salt per cubic foot.

E. A hardness test kit shall be included with the softener.

1.5 INSTALLATION

A. Provide and install the softener complete with inlet and outlet valves and unions, and bypass piping around the inlet and outlet connections.

B. Install sampling tees/valves in inlet and outlet piping to the mineral tank for testing the water.

END OF SECTION

SECTION 223200

DOMESTIC WATER FILTRATION EQUIPMENT

GENERAL GUIDELINES

1.1 SECTION INCLUDES

A. Quantitative requirements for the iron filter system.

1.2 SUBMITTALS

A. Submittals are required and shall include product data noting materials, sizes, and dimensions.

1.3 QUALITY ASSURANCE

A. The iron filter system shall meet with the approval of the OEPA when used in conjunction with a water well.

B. The iron filter shall be sized to meet the requirements concerning the amount of water to be filtered between regenerations based on the iron content.

C. The iron filter system shall remove all ferrous, ferric or bacterial iron from the incoming water supply without the use of chemicals.

1.4 IRON FILTER SYSTEM

A. The main service valve shall be diaphragm operated. No raw water bypass is allowed. If controller maintenance is required, the system will remain in service.

B. An automatic flow controller shall be provided to maintain backwash and rinse rates over variable operating pressures.

C. A factory assembled cycle controller shall incorporate an adjustable time switch with multi-ported pilot valve to control all steps of automatic regeneration with provisions for manual regeneration.

D. The muti-ported pilot control valve shall automatically pressure activate the main operating service/backwash valves through the steps of regeneration and return to service. In the event of a power failure, a complete regeneration can be performed by manual operation of the pilot valve.

E. The electrical time clock shall be adjustable to initiate regeneration at any time of the day and any number of days in a minimum of a 12 day period.

F. The mineral shall require no chemical regeneration. Periodic regeneration shall only be required.

G. The air induction system to introduce oxygen into the water for the oxidation process shall be of the venturi type. Forced air injection is not acceptable.

H. Attrition loss of mineral shall not exceed 3 to 5 percent per year.

I. The distribution shall be factory installed with a washed quartz gravel bed.

1.5 INSTALLATION

A. Install all equipment and associated piping and valves.

B. Install sampling tees/valves in the inlet and outlet piping to the mineral tank for testing the water.

C. Provide bypass piping around the inlet and outlet connections.

END OF SECTION

SECTION 223400

DOMESTIC WATER ***HEATING SYSTEMS***

GENERAL GUIDELINES

1.1 SECTION INCLUDES

A. Qualitative requirements for instantaneous gas fired water heaters, hot water storage tanks, electric booster heater, tank type under fired heaters, and combination power vented heaters installed in a common tank.

1.2 SUBMITTALS

A. Submittals are required and shall include product data noting materials, sizes, and dimensions.

1.3 QUALITY ASSURANCE

A. Gas units shall meet CSA requirements.

B. Units must meet ASHRAE 90.1, ADDM 90 1 b.

C. The gas heater shall be ASME certified for 125 psi operation and National Board listed.

D. Heater shall be rated at a minimum of 82 percent thermal efficiency.

1.4 WARRANTY

A. Water heater heat exchanger - 5 year.

B. Storage tank - 5 year limited.

C. Booster heater - 3 year limited.

D. Combination heat exchanger/storage tank – 5 year.

E. Gas-fired units shall have sealed combustion.

1.5 INSTANTANEOUS GAS FIRED WATER HEATER

A. Two pass copper fin tubes.

B. Cast iron headers.

C. Built-in draft diverter.

D. Insulated jacket.

E. ASME temperature and pressure relief valves.

F. Electronic controls.

G. Integral bronze circulation pump.

H. Flow switch.

I. Electronic ignition.

J. Cupro nickel heat exchanger.

1.6 HOT WATER STORAGE TANKS

A. Vertical storage tank.

B. Glass lining.

C. ASME constructed.

D. Insulated.

E. 150 psi work pressure.

D. Inlet and outlet piping.

1.7 COMBINATION 2 HEATERS AND STORAGE TANK

A. Vertical storage tank.

B. Polymer-lined tank.

C. ASME constructed.

D. Insulated.

E. 150 psi working pressure.

F. Inlet and outlet piping.

G. Submerged combustion heat exchangers.

H. Electronic flame safeguard.

1.8 ELECTRIC BOOSTER HEATERS

A. The tank construction shall have a 150 psi working pressure. The interior of the tank shall be glass lined. The jacket surrounding the tank shall be stainless steel front with baked enamel sides and back with 6 inch adjustable legs

B. The control circuit shall consist of a pilot switch with indicator light, built in thermostat and hi-limit, and magnetic contactors.

C. Heater elements shall be copper-sheathed, furnished with 4 bolt flange for disassembly without removing the booster head.

D. Provide ASME temperature and pressure relief valve, temperature and pressure gauge.

1.9 TANK TYPE UNDER FIRED HEATER

A. Multi-flue design.

B. Working pressure - 150 psi.

C. Glass lined.

D. ASME constructed.

E. Insulated with minimum 2 inch foam insulation.

F. Heavy jacket.

G. Vent damper control.

H. Spark ignition.

1.10 HEAT MAINTENANCE CABLE

A. Wrap piping with self-regulating cable to maintain temperature in piping.

B. Provide controller for adjusting temperature and night and weekend set back.

C. Provide cable temperature to match intended service.

D. The cable shall meet a 10-year limited warranty period.

E. Install with correct thickness of insulation.

F. Follow manufacturer's installation instructions.

1.11 INSTANTANEOUS ELECTRIC WATER HEATER

A. Use heater for one or multiple sinks and lavatories.

B. Install heater(s) above ceiling or away from student access.

C. Size per GPM requirements.

D. Verify water quality concerning excessive buildup of minerals on interior heating surfaces.

E. Provide thermostatic mixing valve if required.

1.12 INSTALLATION

A. The heater shall be designed to produce the required gallons per hour at the temperature required based on the Btu input.

B. Where two or more heaters are shown, pipe for equal flow through the heaters. Provide unions and shutoff valves at each heater connection.

C. Follow manufacturer's recommendations for installation, space requirements, and piping sizing.

D. Provide temperature and pressure gauge in the upper 1/3 portion of the tank.

E. The booster heater shall boost the 140 degree water to 180 degrees for the dishwasher final rinse.

E. Time of day control shall be provided to disable domestic water heater system when building is unoccupied.

END OF SECTION

SECTION 224000

PLUMBING FIXTURES

GENERAL GUIDELINES

1.1 SECTION INCLUDES

A. Qualitative requirements for plumbing fixtures and plumbing specialties.

1.2 SUBMITTALS

A. Submittals are required and shall include product data noting materials, sizes and dimensions.

1.3 QUALITY ASSURANCE

A. Meet requirements of the current Plumbing Code.

B. Water closets shall meet ANSI A112.19.1M. Trim shall meet ANSI A112.19.5.

C. Urinal shall meet ANSI 2124.4, ASME A112.19.2M, and ASME A112.19.6. Trim shall meet ANSI A112.19.5. The optional waterless urinal shall meet ASTM A112.19.2M and A-117.1 and 1APMO 1 GC 161-2000 and ANSI Z124.9-94.

D. Lavatories shall meet ANSI A112.19.1M and Z 124.3.

E. Drinking water coolers shall meet ANSI A112.19.2M.

F. Sink shall meet ANSI A112.19.1M and A112.19.2M.

G. Sinks shall meet ANSI A112.19.1M and A112.19.2M.

H. All fixtures shall meet the governmental regulations for low-flow operation.

I. Drinking fountains shall meet ASME A112.19.1, A112.19.2, or A112.19.9, and ANSI 117.1.

J. Drinking water coolers shall meet ARI 1010 and ANSI 117.1.

1.4 PLUMBING FIXTURES AND SPECIALTIES

A. Water closets shall be wall mounted, white vitreous china with white seat and flush valve. Water closets for kindergarten students can be floor mounted. Automatic/battery or direct wired flush valve is optional.

B. Urinals shall be white vitreous china with flush valve. Automatic/battery or direct wired flush valve is optional. An option to the urinal with flush valve shall be the waterless type vitreous china urinal with a removable ABS plastic trap.

C. Lavatories shall be wall hung, white vitreous china with hot and cold blade handle faucet on 4 inch centers. An option to the lever handles shall include commercial grade single lever faucets with a ceramic disc. An option to the lever handle faucet shall be a battery or hardwired infrared faucet.

D. Showers shall be pressure balancing, single lever with vandal resistant shower head.

E. Drinking water coolers and fountains shall be wall mounted and shall meet ADA requirements.

F. Sinks shall be 302 or 304 stainless steel, single, double, or triple compartment with faucet with hot and cold blade handles and swing spout. An option to the lever handles shall include commercial grade single lever faucets with a ceramic disc.

G. Science lab sinks shall be acid resistant for high school applications. Provide acid resistant strainer and tailpiece. Science casework contractor shall provide sink and trim.

H. Service sinks shall be floor mounted molded stone, 10 A high, 24" x 24", 3" outlet and a wall faucet with pail hook and vacuum breaker.

I. Washfountains shall be terrazzo or stainless steel or modified acrylic (complying with ANSI 2124.3 and ANSI 2124.6) with infrared sensing for water activation, ADA accessible, and floor or wall mounted.

J. Emergency eye wash shall be wall mounted, ADA accessible and set at ADA height. Also provide supply from thermostatic mixing valve per ANSI Z358.1, latest edition.

K. Emergency shower shall have a 10 inch diameter shower head, vertical or horizontal supply and have a ADA accessible handle. Also provide supply from thermostatic mixing valve per ANSI Z358.1, latest edition.

1.5 PLUMBING FIXTURES AND SPECIALTIES (cont.)

O. Provide a stainless steel, wall mounted drinking fountain for exterior installations. Unit shall be freezeproof, have push button activation and be ADA accessible. Mount to the exterior building wall.

1.6 INSTALLATION

A. Lavatories, water closets, and urinals shall have carriers attached to the floor.

B. All fixtures and trim so noted for handicap installation shall meet ADA requirements.

C. Clay trap installation for an ADA sink shall not interfere with the space requirements under the sink. Locate next to the sink casework.

D. The power transformer for the washfountain shall be a plug-in type located within the housing of the washfountain, and plugged into a duplex receptacle.

END OF SECTION

SECTION 226313

GAS PIPING SYSTEMS

GENERAL GUIDELINES

1.1 SECTION INCLUDES

A. Qualitative requirements for natural gas piping, gas valves, and gas regulators.

1.2 SUBMITTALS

A. Submittals are required and shall include product data noting materials, sizes, performance ratings, and installation instructions.

1.3 QUALITY ASSURANCE

A. Conformance to National Fuel Gas Code.

B. Material and installation requirements shall follow NFPA 54, state and local gas company codes.

C. Conformance to ANSI B31.

D. Gas regulators shall be AGA rated.

1.4 GAS PIPING

A. Gas piping shall be schedule 40 black steel piping.

B. Gas piping installed external to the building from the service main to the gas meter shall be as per the gas company requirements.

C. Final connection from the building gas piping system to the gas turret in the science room can be corrugated stainless steel tubing per NFPA 54, state and local gas company requirements.

1.5 GAS VALVES

A. Gas valves 2 inches and smaller shall be full port all brass screwed gas service stops with lever handles and check.
1. (option) Gas valves 2” and smaller may be ¼ turn ball valves.

B. Gas valves 2-1/2 inches and larger shall be semi-steel, straightway flanged, 125 pounds swp, square head wrench operated, lubricated plug valve.

C. Kitchen Hood – Spring loaded (N.C.) gas valve or manual reset electric solenoid valve.

D. In the science and art rooms, provide the following:
1. A manual reset, solenoid operated shut-off valve with 120v operation with remote push button operation and fire alarm system activation.

1.6 GAS REGULATORS

A. Gas regulators shall be die cast aluminum alloy diaphragm, external vent connection, interchangeable brass orifices, cast iron body, Buna-N with nylon fabric insert diaphragm.

1.7 INSTALLATION

A. Unions and valves are not permitted in the gas piping in a return air plenum.

B. Piping 1-1/2 inches and smaller shall have threaded joints.

C. Piping 2 inches and larger shall have welded joints.

D. All regulators shall be separately vented full size to the exterior, with a turndown elbow and insect screen. Vent outlet shall not terminate next to a combustion or fresh air intake.

E. Provide a valve, union, and dirt leg at connection to each appliance. Lubricate all valves before putting the valves into service.

F. Provide 1/2 inch elastomeric insulation around all piping in walls and through floors.

G. Test all gas piping per NFPA 54.

H. Gas piping shall be accessible.

I. Science room auto shut-off valves can be located in teacher's demo unit, under sink, or exposed in storage room.

END OF SECTION

23

DIVISION

HEATING, VENTILATING, and AIR CONDITIONING

TABLE OF CONTENTS

DIVISION 23: HEATING, VENTILATING, and AIR CONDITIONING

230501	Common Work Results for HVAC
230507	HVAC Piping
230514	Variable Frequency Drives
230519	Meters and Gauges for HVAC Piping
230523	General Duty Valves for HVAC Piping
230525	Roof Curbs
230529	Hangers and Supports for HVAC
230548	Vibration and Seismic Control for HVAC
230553	Identification for HVAC
230593	Testing, Adjusting, andBalancing for HVAC
230719	HVAC Insulation
230923	HVAC Direct Digital Controls
230993	Sequence of Operation for HVAC
231101	Liquid Petroleum Gas Piping
232113	HVAC Piping Specialties
232117	Glycol Heat Transfer Fluid
232119	HVAC Flow Control
232123	HVAC Hydronic Pumps
232300	Refrigerant Piping
232500	***HVAC Water Treatment***
233113	Low-Pressure Ductwork
233115	Medium-Pressure Ductwork
233117	Flexible Ductwork
233300	Ductwork Accessories
233313	Exterior Wall Louvers
233400	HVAC Fans
233423	Rooftop Intake, Exhaust,& Relief Ventilators
233513	Dust Collection System
233515	Welding Exhaust System
233600	Variable Air Volume Terminals
233713	Air Outlets and Inlets
233716	Fabric Air Distribution Devices
233718	Underfloor Air Distribution System
233800	***Kitchen Hood Ventilation System***
234323	Air Cleaning System
235100	Breeching, Chimneys, and Stacks
235213	Electric Boilers
235216	Flue Gas Condensing Boilers
235223	Cast Iron Boilers
235225	Steel Firebox Boilers
235233	Flexible Water Tube Boilers
235239	Packaged Firetube Boilers
235700	Heat Exchangers
236213	***Refrigerant Condensing Units***
236215	***Multiple-Compressor Refrigerant Condensing Units***
236416	Packaged, Centrifugal Water Chiller
236423	***Packaged, Scroll Water Chiller***
236426	***Packaged, Rotary Screw Water Chiller***
236440	Refrigerant Monitoring Systems
236500	Packaged Cooling Towers
236533	Closed Circuit Fluid Coolers
237119	Ice Storage System
237200	***Air to Air Energy Recovery Equipment***
237313	***Modular Indoor Air Handling Units***
237323	***Custom Indoor Air Handling Units***
238113	Unitary Air Conditioning Equipment
238123	Computer Room Air Conditioners
238146	Water Source Heat Pumps
238156	Ground Source Heat Pumps(Geothermal)
238219	Fan Coil Units – Four Pipe
238223	Unit Ventilators – Four Pipe
238233	Convectors
238239	Cabinet Unit Heaters
238240	Propeller Unit Heaters
238316	Radiant Heating Hydronic System

SECTION 230501

COMMON WORK RESULTS FOR HVAC

GENERAL ***GUIDELINES***

1.1 SECTION INCLUDES QUALITATIVE REQUIREMENTS FOR:

A. Pipe and pipe fittings.

B. Dielectric fittings.

C. Mechanical sleeve seals.

D. Piping specialties.

E. Installation requirements common to piping systems and specification sections.

F. Installation requirements common to equipment specification sections.

G. Testing and repair.

H. Final completion.

I. Record drawings.

J. Maintenance and operating manuals.

K. Lubrication and packing.

1.2 SUBMITTALS

A. Submittal data is required for dielectric fittings, flexible connectors, mechanical sleeve seals, and piping specialties.

B. Refer to specific sections of this specification for additional submittal requirements.

1.3 QUALITY ASSURANCE

A. Any manufacturer other than basis of design shall be responsible for any additional requirements for electrical service, physical space limitations, and capacities at no additional cost to the project.

B. Materials and installation shall comply with requirements of governing regulations and controlling agencies.

C. All materials used shall be first grade of their kind and shall be new and in first-class condition when installed.

D. Work done by the Contractor shall include the services of an experienced superintendent.

1.4 DELIVERY, STORAGE, AND HANDLING

A. Piping and tubing shall include factory-applied end caps.

B. All piping and tubing shall be elevated from grade for onsite storage.

C. Protect flanges, fittings, and piping specialties from moisture and dirt.

D. Store plastic piping protected from direct sunlight. Support to prevent sagging and bending.

1.5 SEQUENCING AND SCHEDULING

A. Coordinate mechanical equipment installation with other building components.

B. Arrange for pipe spaces, chases, slots, and openings in the building structure during progress of construction.

C. Coordinate installation sleeves and supporting devices with concrete and structural components.

D. Coordinate connection of mechanical systems with underground and overhead utilities and services.

E. Coordinate requirements for access panels and doors.

F. Coordinate installation of identifying devices.

1.6 PROJECT CONDITIONS

A. HVAC support shall only be permitted at steel joist panel points.

B. Any supplemental steel required for support between building structural members shall be the responsibility of the HVAC Contractor.

1.7 PIPE AND PIPE FITTINGS

A. Pipe threads shall meet ASME B1.20.1 for factory-threaded pipe and pipe fittings.

B. Pipe-flange gasket materials shall meet ASME B16.21, nonmetallic, flat, asbestos-free.

C. Pipe Flanges
   1. Full face shall be Class 125, cast iron and cast-bronze material.
   2. Narrow face shall be Class 250, cast-iron and cast steel material.

D. Flange bolts and nuts shall meet ASME B18.2.1.

E. Solder filler materials shall meet ASTM B 32.
   1. Alloy Sn95 and Sn94 shall be used.

F. Brazing filler materials shall meet AWS A5.8.

G. Welding filler metals shall comply with AWS D10.12.

H. Solvent materials shall meet standard solvent cement requirements.
   1. CPVC piping shall meet ASTM F 493.
   2. PVC piping shall meet ASTM D 2564. Include primer according to ASTM F 656.
   3. Plastic pipe seals shall meet ASTM F 477
   4. Flanged, ductile-iron gasket, bolts, and nuts shall meet AWWA C 110.

1.8 DIELECTRIC FITTINGS

A. Fittings shall be zinc plated with a thermoplastic liner, rated for 250 degrees F maximum.

1.9 MECHANICAL SLEEVE SEALS

A. Seals shall be designed with interlocking rubber links shaped to continuously fill annular space between pipe and sleeve and shall include connecting bolts and pressure plates.

1.10 PIPING SPECIALTIES

A. Piping sleeves shall be constructed of galvanized sheet metal or steel pipe. Steel pipe shall meet requirements of ASTM A 53, Type E, Grade A, Schedule 40. Sleeves for copper piping shall be of compatible material to prevent interaction of piping materials.

B. Escutcheons shall be manufactured wall, ceiling, and floor plates, split-type, and of heavy chrome-plated construction.

1.11 HVAC PIPING SYSTEMS - COMMON REQUIREMENTS

A. Division 23 piping/ductwork sections specify unique installation requirements.

B. Install components with pressure rating equal to or greater than system operating pressure.

C. Install all piping and ductwork at right angles or parallel to the building walls. Diagonal runs are prohibited.

D. Install piping and ductwork tight to slabs, beams, joists, columns, walls, and other building elements. Allow sufficient space above removable ceiling panels to allow for panel removal.

E. Install all piping specialties to meet manufacturer's requirements.

F. Install pipe sleeves at all wall penetrations. Provide Schedule 40 steel pipe.
   1. PVC pipe sleeves are not permitted.
   2. Do not install sleeves through structural members.

G. Maintain fire rating at fire wall penetrations through the use of approved fire sealant materials installed in pipe sleeve.

H. Install unions in piping 2 inch and smaller adjacent to each valve and at final connection to each piece of equipment.

I. Install flanges in piping 2-1/2 inch and larger adjacent to flanged valves and at final connections to equipment with flanged pipe connections.

1.12 EQUIPMENT INSTALLATION - COMMON REQUIREMENTS

A. Install equipment to facilitate service, maintenance, and repair or replacement of components.

B. Maintain lubrication gaskets and packing during construction and assure that at time of acceptance by the Owner, equipment is in first-class operating condition.

1.13 EQUIPMENT START-UP

A. Start-up of all HVAC equipment shall be video-taped by the HVAC contractor. Two copies shall be turned over to the Owner's maintenance staff.

1.14 TESTING AND REPAIR

A. All piping and ductwork systems shall be throughly cleaned and flushed prior to final testing.

B. Supply, return, and exhaust air ductwork systems shall be pressure tested to a minimum leakage rate.

C. Pressure testing shall be completed for the following piping systems:
   1. Heating water, chilled water, heat pump condenser loop water, and cooling tower condenser water systems.

D. All testing must be witnessed and accurately recorded noting methods of testing, times, dates, and results.

E. Any damage as a result of tests shall be repaired or damaged materials replaced at no cost to the Owner.

1.15 FINAL COMPLETION

A. All work shall be cleaned prior to issuance of Substantial Completion.

B. Retouch or repaint factory painted prime and finish coats where scratched or damaged.

C. Deliver filters, belts, and equipment, as required by this Specification, to Owner and obtained signed receipts of delivery.

D. Clean equipment, restore damaged materials, and leave the Work in acceptable condition.

E. Remove all site tools, equipment, surplus materials and rubbish continuously at no additional cost to the Owner.

F. Contractor shall submit written certificates warranting each item of equipment.

1.16 RECORD DRAWINGS

A. The Contractor shall keep a running record of each change and deviation from the Drawings on a clean and undamaged set of Drawings.

B. The final Project Record Drawings shall be submitted to the Engineer for approval at the completion of the project.

C. Record Drawings shall include the location of concealed piping and ductwork.

1.17 MAINTENANCE AND OPERATING MANUALS

A. The Maintenance and Operating Manuals shall comply with other Sections of this Specification. Submit in triplicate for inclusion in Maintenance and Operating Manuals.

B. Bind the written operating instructions, approved shop drawings, equipment catalog cuts, equipment warranties, and manufacturer's instructions into a binder.

END OF SECTION

SECTION 230507

HVAC PIPING

GENERAL ***GUIDELINES***

1.1 SECTION INCLUDES

A. Qualitative requirements for HVAC piping.

1.2 SUBMITTALS

A. Submittals are required and shall include product data noting materials, sizes, and dimensions.

1.3 QUALITY ASSURANCE

A. Follow manufacturer's requirements for installation.

B. Welding procedures per ANSI/ASME Section 9, AWS D10.9 and D1.1 and the National Certified Pipe Welding Bureau.

C. Brazing procedures per ANSI B31.5 and the ASME Boiler and Pressure Vessel Code SFA-5.8, Section II.

D. Soldering procedures per ANSI B16.18.

E. Comply with ANSI B31 pressure code for pressure piping.

1.4 HVAC PIPING

A. Heating, Chilled, Cooling Tower Condenser, and Heat Pump Condenser Water Supply and Return Piping

1. Black steel piping
   a. Piping shall be standard weight black steel for 2-1/2 inch and smaller per ASTM A53 or A120. Fittings shall be class 125 cast iron threaded per ANSI B16.4.
   b. Piping shall be standard weight black steel for 3 inch and larger per ASTM A53 or A120. Fittings shall be butt welded.
2. Copper piping
   a. Piping 2-1/2 inches and smaller shall be type L copper per ASTM B88. Fittings shall be wrought copper per ANSI B16.22.
3. Grooved piping (option)
   a. Grooved piping with ductile iron or bronze couplings and EPDM gaskets.
   b. Copper and steel pipe shall be as listed above.
4. Copper press fittings may be used as an option per ASTM B16.18 or ASTM B16.22. O-Rings shall be EPDM.
5. Underground piping
   a. Piping shall be pre-insulated piping system with copper or steel pressure carrier pipe, polyurethane insulation and PVC jacket.
   b. Piping system shall include o-ring seals and expansion compensation.
   c. Piping system shall incorporate thrust blocks and other accessories as recommended by system manufacturer.

B. Underground, Ground Source Heat Pump System Piping
   1. High density polyethylene piping
      a. Material classification per ASTM D-1248.

C. Air Conditioning Condensate Drain Piping
   1. Piping shall be Schedule 40 PVC with solvent joints per ASTM D2665, D2564, D2665.
   2. In air plenums and through fire walls, Piping shall be type L copper per ASTM B88. Fittings shall be wrought copper per ANSI B16.22

1.5 INSTALLATION

A. Terminate vent piping through roof, a minimum of 12 inches above the roof.

B. Refer to Section 232500 HVAC Water Treatment for flushing, cleaning, and water treatment requirements.

C. All piping on site must be capped and sealed from contamination and debris throughout the construction cycle.

END OF SECTION

SECTION 230514

VARIABLE FREQUENCY DRIVES

GENERAL ***GUIDELINES***

1.1 SECTION INCLUDES

A. Qualitative requirements for electronic variable frequency drive with motor starter.

1.2 SUBMITTALS

A. Submittals are required and shall include product descriptive literature demonstrating compliance with written specification and, at a minimum, shall include the following:
   1. Inverter efficiency and power factor curves.
   2. Performance curves.
   3. Substantiating data for Mean Time Between Failure (MTBF).

1.3 QUALITY ASSURANCE

A. Variable frequency drives shall comply with applicable requirements of the latest standards of ANSI, IEEE, NEMA, and NEC.

B. Each drive shall be UL Listed.

C. Drives used throughout a project site shall be provided by the same manufacturer for all applications (fans and pumps).

D. Audible motor drive noise shall be no more than 5 db louder than across line starter operation.

1.4 WARRANTY/TRAINING

A. Manufacturer shall warrant complete drive system for a period of 1 year.

B. A factory trained representative shall provide a minimum of 8 hours on-site training to Owner selected personnel on the operation and maintenance of each drive installed.

1.5 ELECTRONIC REQUIREMENTS

A. Each drive shall be microprocessor based, fully transistorized with 3 phase, full wave diode bridge input, and pulse-width-modulating sine-coded output waveform.

B. Output transistors shall be of the Insulated Gate Bipolar Transistor (IGBT) type.

C. Minimum 20 years MTBF required.

D. Maximum switching frequency of 15 KHZ.

E. Displacement power factor shall be 0.98 or better over the entire operating frequency and load range.

1.6 PROTECTIVE FEATURES

A. Drive enclosure shall be NEMA 1 and shall be wall-mount or free standing as indicated on the Drawings.

B. Controlled acceleration and deceleration shall be adjustable from 3 to 600 seconds. Current limits shall prevent overflow trips.

C. Minimum switching frequency shall be adjustable from 0 to 100 percent of base frequency.

D. Maximum switching frequency shall be adjustable from 110 to 0 percent of base frequency.

E. Automatic boost for 100 percent starting torque.

F. Hand-off-auto switch mounted in front door of mounting enclosure.

G. Fault contact for remote indication.

H. Contact closure for remote indication that drive is operating.

I. Automatic restart on fault that is programmable for 0 to 5 restarts.

J. Minimum of 2 critical frequency avoidance points with programmable deadband.

K. Output signal for motor speed shall be 0 to 10 vdc or 4-20 milliamp.

L. Output voltage regulation.

M. Continued operation of drive at 80 percent of last speed reference input if control command is lost.

1.7 OPERATION PROTECTION

A. Current limit control for protection against normal transients and surges from incoming power lines, grounding systems, or runaway incoming speed reference signal.

B. Protection from phase-to-phase and phase-to-ground faults.

C. Torque limit control.

D. Capabilities to start into a spinning load and windmilling operation.

E. Instantaneous overcurrent trip to monitor peak currents and provide shutdown without component failure.

F. Input line reactors with a minimum of 3 percent rating on all incoming phase lines.

G. DC link choke to reduce current and voltage harmonics reflected to the AC power supply.

1.8 OPERATING CONDITIONS

A. Unit shall comply to the following operating conditions:
1. Line voltage: +10 percent, -10 percent of rating.
2. Line frequency: + or - 5 percent
3. Overload: 100 percent
4. Ambient temperature: 0 degrees to 40 degrees C.
5. Altitude: 3,300 feet or less
6. Atmosphere: 95 percent relative humidity, noncondensing
7. Efficiency: 97 percent at 100 percent load, 100 percent base speed. 80 percent at 12.5 percent load, 80 percent speed.
8. Fundamental power factor shall be 0.98 at all speeds and loads.

B. Digital operator/keypad is required and shall include the following features:
1. Motor speed indication, in RPM, percent speed, or frequency (Hz)
2. Speed reference signal
3. Alpha-numeric fault trip annunciation
4. Output current
5. Output power
6. Output voltage
7. Bus voltage

C. Indicator lights as follows:
1. Power on light
2. Run light
3. VFD trip light
4. External fault light

1.9 INSTALLATION

A. Install in accordance with manufacturers requirements.

B. A factory authorized and trained technician shall preform the initial startup on all drives.

END OF SECTION

SECTION 230519

THERMOMETERS AND GAUGES FOR HVAC EQUIPMENT

GENERAL ***GUIDELINES***

1.1 SECTION INCLUDES

A. Qualitative requirements for thermometers and fittings, as well as pressure gauges and fittings.

1.2 SUBMITTALS

A. Submittals are required and shall include product data noting materials, sizes, and dimensions.

1.3 COMPONENTS

A. Thermometers: 1-percent accuracy.
1. Direct-Mounting Filled-System Dial Type: Vapor actuated, thermal bulb, precision brass gear.
2. Remote-Reading, Filled-System Dial Type: Vapor actuated, thermal bulb; precision brass gear.
3. Bimetal Dial Type: Direct mounting, bimetal coil.
4. Insertion Dial Type: Bimetal coil.
5. Non-toxic, organic filled liquid-in-glass, column type thermometer.

B. Pressure Gauges: Phosphor-bronze Bourdon-tube gages, 1-percent accuracy.
1. Vacuum Range: 30 inches Hg of vacuum to 15 psig of pressure .
2. Pressure Range: Two-times operating pressure.
3. Liquid filled pressure gauge where appropriate. ***Liquid shall be non-toxic, organic type.***

1.4 INSTALLATION

A. Provide thermometers at the following locations:
1. Inlet and outlet chilled water connection to chillers
2. Inlet and outlet heating water connections to boilers.
3. Heating water, heat pump condenser loop, and chilled water supply and return loop to and from the building if primary/secondary pumping is used or if a 3-way valve is used to reset the building heating water temperature.
4. At all coil connections at main air handling units.
5. Condenser water supply and return piping.
6. Heat exchanger inlet and outlet piping.

B. Provide pressure gauges at the following locations:
1. One pressure gauge with 2 independent needle valves piped to the suction and discharge piping of all pumps except coil recirculating pumps.
2. Inlet and outlet piping of each chiller.
3. Outlet piping of each boiler unless integral to the boiler.
4. Domestic cold water fill connection to the HVAC hydronic loop downstream of the pressure reducing valve.

END OF SECTION

SECTION 230523

GENERAL DUTY VALVES FOR HVAC PIPING

GENERAL ***GUIDELINES***

1.1 SECTION INCLUDES

A. Qualitative requirements for valves.

1.2 SUBMITTALS

A. Submittals are required and shall include product data noting type materials, sizes, and dimensions.

1.3 QUALITY ASSURANCE

A. The following standards apply.
1. ANSI B16.10, MSS SP-67-90 Butterfly Valves.
2. MSS SP-70-90 Cast Iron Gate Valves, Flanged or Threaded Ends.
3. MSS SP-78-92 Cast Iron Plug Valves Flanged and Threaded.
4. MSS SP-80-87 Bronze Gate, Globe, and Check Valves.
5. MSS SP-85-85 Cast Iron Globe and Angle Valves, Flanged and Threaded Ends.
6. MSS SP-110-92 Ball Valves Threaded, Socket-Welded, Solder Joint, Grooved and Flared Ends.

1.4 COMPONENTS

A. Gate Valves
1. 2-1/2 Inch NPS and Smaller: Cast-iron body with threaded connections for steel piping systems. Bronze body with soldered or threaded connections for copper piping systems, solid-bronze wedge, Class 125 or 150, rising stem, and soldered or threaded connections.
2. 3 Inch NPS and Larger: Cast-iron body and bonnet, Class 125, solid cast-iron wedge, outside screw and yoke, and flanged connections.

B. Ball Valves
1. Bronze body and bonnet, two-piece construction, chrome-plated ball, standard port for 2-1/2 inch NPS and smaller and full port for 3 inch NPS valves, Class 150, with stem extensions for insulated piping and memory stops.

C. Globe Valves
1. 2-1/2 Inch NPS and Smaller: Cast-bronze body and bonnet, Class 125 or 150, with threaded or soldered connections.
2. 3 Inch NPS and Larger: Cast-bronze body and bonnet, Class 125, outside screw and yoke, with flanged connections.

D. Butterfly Valves: Cast-iron body and bonnet, Class 250, 200 psig working pressure, stainless-steel stem; lug, or grooved style connections. (For HVAC systems only)
   1. Disc Type: [Aluminum bronze] [stainless steel]
   2. Operator:
      a. Standard lever handle.
      b. Standard lever handle with memory stop.
      c. Lever handle with latch lock.
      d. Gear with position indicator.
      e. Gear with position indicator and chain wheel.
      f. Chain wheel.

E. Check Valves
   1. Swing Type, 2-1/2 Inch NPS and Smaller: Bronze body, Class 125 or 150, horizontal swing, with threaded or soldered connections.
   2. Swing Type, 3 Inch NPS and Larger: Cast-iron body, Class 125, horizontal swing, with flanged or grooved connections.
      a. Wafer Type: Class 125, cast-iron body, bronze disc, with stainless-steel pins and springs.
      b. Lift Type: Class 125, bronze body and cap, horizontal or vertical pattern, bronze disc, with threaded or soldered connections.

1.5 INSTALLATION

A. Install all threaded valves with a union joint on the downstream side of the valve.

B. Provide valves to isolate all equipment and coils.

C. Provide valves of like material as the piping systems.

D. Provide dielectric connections between all dissimilar metals.

END OF SECTION

SECTION 230525

ROOF CURBS

GENERAL ***GUIDELINES***

1.1 SECTION INCLUDES

A. Qualitative requirements for roof curbs for equipment mounting and piping penetrations.

1.2 SUBMITTALS

A. Submittals are required and shall include material, quantities, and dimensions.

1.3 COMPONENTS

A. Roof Curbs

1. Roof curb shall be constructed of galvanized steel with welded corner beams and pressure treated 2 by 2 wood nailer.
2. Curbs shall be preinsulated with 1-1/2 inch rigid insulation.
3. Top of curb shall set dead level.
4. Base of curb shall match roof slope.
5. Provide 18 inches for kitchen hood exhaust fans.

B. Box Curb

1. Box section curbs shall be constructed of welded, heavy gauge galvanized steel with mitered and welded corners, integral base plate, and pressure treated wood nailer.
2. Curb shall be insulated with minimum 1-1/2 inch rigid insulation.

C. Equipment Support

1. Rails shall be 18 gauge welded galvanized steel with a welded galvanized counterflashing. Unit to have integral base plate, and 2 by 4 pressure treated wood nailer.
2. Rails to be of the length and strength required to support the specified equipment.
3. Equipment rails shall be internally reinforced to conform with manufacturers load bearing factors.

D. Pipe Roller Supports

1. Pipe support shall be constructed from heavy gauge galvanized steel with continuous welded corner seams, 2 by 4 treated wood nailer, galvanized steel counterflashing and galvanized steel channel track.

E. Pipe Curbs

1. Pipe curb shall consist of a heavy gauge galvanized steel roof curb of unitized construction, with integral base plate, 3 pound density insulation, and 2 by 2 nailer. Curb shall be covered with a thermoplastic cover, fastening screws, graduated step boots with stainless steel adjustable clamps.

1.4 INSTALLATION

A. Roof curbs and equipment rails shall be mounted with top dead level, properly anchored to the deck.

B. Roof curbs for metal roof systems shall be provided by the metal roof system manufacturer.

END OF SECTION

SECTION 230529

HANGERS AND SUPPORTS FOR HVAC

GENERAL GUIDELINES

1.1 SECTION INCLUDES

A. Qualitative requirements for piping hangers and supports, and equipment hangers and supports.

1.2 SUBMITTALS

A. Submittals are required and shall include product data noting materials, sizes, and types.

1.3 COMPONENTS

A. Hangers, supports, and components shall be factory fabricated according to MSS SP-58, the latest edition.

B. Hangers for piping shall be of a compatible material or coating.

C. Continuous threaded rod shall be used wherever possible. ***An engineered cable support system is acceptable.*** Chain, wire, or perforated straps shall not be permitted.

D. Concrete inserts into poured concrete floor systems are permitted.

E. Beam clamps, trapeze hangers, and clevis hangers shall be permitted.

F. Supports from roof decking systems are not permitted.

G. Concrete inserts into precast concrete plank are permitted.

H. Powder activated fasteners are not allowed.

1.4 INSTALLATION

A. All hangers and supports shall be attached to the building structural steel system.

B. Support from steel joist panel point is required.

C. All hangers, supports, and fastening methods used shall be suitable for the weight of the components being supported.

END OF SECTION

SECTION 230548

VIBRATION and SEISMIC CONTROL for HVAC

GENERAL ***GUIDELINES***

1.1 SECTION INCLUDES

A. Qualitative requirements for vibration isolators, equipment bases, and flexible connectors.

1.2 SUBMITTALS

A. Submittals are required and shall include product data noting calculations, materials, sizes, and dimensions.

1.3 COMPONENTS

A. Vibration isolators as follows:
1. Isolator Pads: Oil- and water-resistant [rubber] [fiberglass or cork].
2. Rubber Isolator Mounts: Double-deflection type.
3. Spring Isolators: Freestanding, laterally stable, open-spring type.
4. Restrained Spring Isolators: Vertically restrained, freestanding, laterally stable, steel open-spring type.
5. Rubber Hangers: Double-deflection type.
6. Spring Hangers: Combination spring and elastomeric hangers with coil spring and elastomeric insert in compression.

B. Equipment bases as follows:
1. Concrete filled, steel constructed inertia bases.
2. Structural steel bases without inertia pad.

C. Flexible piping connectors as follows:
1. Molded reinforced neoprene construction with steel flanges and control rods.
2. Flexible steel braided construction with steel flanges.

1.4 INSTALLATION

A. Installation of vibration isolation, piping connections, and inertia bases shall be in accordance with the manufacturer's recommendation.

B. Rigid connections between vibrating equipment and the building shall not be permitted.

END OF SECTION

SECTION 230553

IDENTIFICATION FOR HVAC

GENERAL ***GUIDELINES***

1.1 SECTION INCLUDES

A. Qualitative requirements for HVAC identification methods, materials and devices.

1.2 SUBMITTALS

A. Submittals are required and shall include product data noting materials, sizes, and dimensions for identification systems.

B. Submittals are required of valve schedules.

1.3 QUALITY ASSURANCE

A. Identification requirements shall meet ASME A13.1.

1.4 COMPONENTS

A. Equipment Nameplates: Aluminum, permanently fastened to equipment, engraved or stamped.

B. Stencils: Standard stencils shall be black enamel on a white background or white enamel on a dark background.

C. Snap-on Plastic Pipe Markers: Preprinted, semi-rigid type, color-coded.

D. Pressure-Sensitive Pipe Markers: Preprinted, color-coded, vinyl type with permanent adhesive.

E. Pipe Markers: Full band type.

F. Plastic Duct Markers: Laminated plastic, color coded, and engraved with the service.

G. Plastic Tape: Color-coded, pressure-sensitive, self-adhesive vinyl.

H. Valve Tags: Polished tags with numbers and letters.

I. Access Panel Markers: Engraved plastic laminate.

J. Engraved Plastic-Laminate Signs: Sizes required to contain message.

K. Plastic Equipment Markers: Standard color-coded, laminated plastic.

L. Plasticize Tags: Preprinted, accident prevention.

M. Valve Location Tags: 3/4 inch diameter colored, pressure-sensitive adhesive paper circles.

1.5 VALVE CHARTS

A. Valve charts shall be furnished by each respective Contractor and shall include the following items:
   1. Valve identification
   2. Location
   3. Purpose

B. Valve charts shall be included in the Maintenance and Operating Manuals.

1.6 INSTALLATION

A. Piping, equipment and valve identification shall be completed prior to issuance of Substantial Completion.

END OF SECTION

SECTION 230593

TESTING, ADJUSTING, AND BALANCING FOR HVAC

GENERAL GUIDELINES

1.1 SECTION INCLUDES

A. Qualitative requirements for the testing, adjusting, and balancing of the HVAC air and water systems; includes the performing contractor's certification requirements.

1.2 SUBMITTALS

A. Submittals are required and shall include the complete certified report for all air and water system pressure testing and balancing including all electrical performance of each piece of HVAC equipment.

B. Prior to commencement of the work described in this Section, the testing, adjusting, and balancing contractor shall submit verification of his AABC or NEBB certification to the Design Professional for acceptance.

1.3 QUALITY ASSURANCE

A. The testing, adjusting, and balancing contractor shall be either AABC or NEBB certified for the work described herein.

B. Project will be Commissioned. Refer to section 9101-01900 for additional information.

1.4 COMPONENTS

A. The Contractor shall provide his own properly calibrated equipment to pressure test, air balance, water balance and to measure electrical characteristics of each piece of HVAC equipment. ***Include a list of instruments to be used for procedures, along with Proof of Calibration.***

1.5 REQUIREMENTS

A. Testing, adjusting, and balancing plan.

B. Systems readiness checks.

C. Testing, Adjusting, and Balancing Procedures: AABC's National Standards or NEBB's "Procedural Standards for Testing, Adjusting, and Balancing of Environmental Systems".

D. Equipment settings marked to show final settings.

E. Balancing shall be performed to meet the requirements of ASHRAE Standard 90.1.

F. Pumps with variable speed drives shall be balanced with all valves 100% open (not including balancing valves at coils).

G. For variable speed fans, fan and motor pulleys shall be replaced (or adjusted, when applicable) so that motor is fully loaded at 100% speed. Balance to design air flow by adjusting maximum variable speed drive output below 100%.

1.6 HVAC SYSTEMS AIRFLOW AND WATER FLOW RATE TOLERANCES

A. Supply, Return, and Exhaust Fans: Plus 5 percent to plus 10 percent.

B. Air Outlets and Inlets: 0 to minus 10 percent.

C. Heating Water Flow Rate: 0 to minus 10 percent.

D. Cooling Water Flow Rate: 0 to minus 5 percent.

1.7 REPORTING

A. Initial Construction Phase Report: Based on examination of Contract Documents, on adequacy of design for systems balancing devices.

B. Status Reports: As Work progresses.

C. Draft "Pencil Copy" Report: Provide draft air balance report when the balancing is complete to the Engineer and Commissioning Authority for review before final report.

D. Commissioning Verification Report: Commissioning Authority will randomly verify TAB work and produce report. TAB Contractor shall make corrections based on this report.

E. Final Report: Certification sheet, with content and format according to AABC or NEBB standard forms.

F. Seasonal Testing: If initial TAB procedures were not performed during near peak summer and winter conditions, perform additional testing, inspecting, and adjusting during near peak summer or winter conditions.

G. 11 month Warranty Walk: TAB to perform additional testing and balancing to verify that balanced conditions are being maintained throughout and to report unusual conditions with recommendation of adjustments. TAB Contractor shall allow two (2) days for this work.

END OF SECTION

SECTION 230719

HVAC INSULATION

GENERAL ***GUIDELINES***

1.1 SECTION INCLUDES

A. Qualitative requirements for interior and exterior pipe insulation, jackets, and accessories.

B. Qualitative requirements for field-applied insulation on hot and cold equipment surfaces.

C. Qualitative requirements for exterior and interior duct and plenum insulation and accessories.

1.2 SUBMITTALS

A. Submittals are required and shall include product data noting materials, thickness for each service or piece of equipment, aged thermal qualities, and accessories.

1.3 QUALITY ASSURANCE

A. Fire performance characteristics in accordance with ASTM E 84 for flame spread of 25 and smoke developed of 50.

B. Materials and installation in accordance with NFPA 255 and UL 723.

C. Insulation thickness shall meet the requirements of ASHRAE Standard 90.1.

1.4 MATERIALS

A. Glass Fiber: All-purpose jacket and vapor-barrier coated.

1.	Preformed:	ASTM C 547, Class I, rigid, jacketed, and vapor-coated.
2.	Board:	ASTM C 612, Type 2, rigid and semi-rigid.
3.	Blanket:	ASTM C 553, Type II, Class F-1.
4.	Adhesive:	UL classification; nonflammable.
5.	Maximum “K” Value:	0.23 at 75 degrees F.

B. Cellular Glass: Insulation with factory-applied, laminated-foil, flame-retardant, vinyl facing.

1.	Piping:	Preformed foamed or cellulated glass, jacketed pipe insulation.
2.	Facing:	ASTM C 921, Type 1.
3.	Blocks:	ASTM C 552, Type I.
4.	Boards:	ASTM C 552, Type IV.
5.	Special Shapes:	ASTM C 552, Type III.
6.	Maximum “K” Value:	0.35 at 75 degrees F.

C. Flexible Elastomeric Cellular: Flexible cellular elastomeric material, molded or sheet.
   1. Preformed: ASTM C534, Type II ***for sheet materal and Type I for tubular material.***
   2. Adhesive: Waterproof vapor retarder.
   3. Maximum "K" Value: ***0.25*** at 75 degrees F.

D. Calcium Silicate
   1. Piping: Rigid molded block insulation, asbestos free ASTM C553, Type I.
   2. Maximum "K" Value: 0.40 at 300 degrees F.

E. Duct Liner Insulation
   1. Material: Flexible blanket, ASTM C518 ***or elastomeric linear per ASTM C534.***
   2. Coating: ASTM C1071. Microbial growth resistant.
   3. Adhesive: UL listed waterproof.
   4. Fasteners: Galvanized steel pins (welded or mechanically fastened) ***with adhesive.***
   5. Maximum "K" Value: 0.25 at 75 degrees F.
   6. Standards: NFPA 90A, NFPA 90B and 25/50 flame and smoke spread.

F. Insulating Cements
   1. Mineral fiber, hydraulic-setting insulating and finishing cement.
   2. Expanded or exfoliated vermiculite.

G. Adhesives: MIL-A-3316C, Classes 1 and 2, Grade A ***for fiberglass. MIL-A-24179A, Type II, Class 1 for elastomerics.***

H. Jackets shall be adjusted for the application.
   1. Piping: PVC or aluminum
   2. Equipment: Foil and paper.
   3. Ductwork: Foil and paper.

I. Polyisocyanurate: Rigid closed cell polyisocyanurate thermal insulation, fabricated into shapes required to insulate pipes, valves, fittings, vessels, and/or special shapes as required.
   1. Density: 2 lb/cf
   2. Permeance: Less than or equal to 3 perm-inch
   3. Provide with a vapor retardant cross laminated high density polyvinylidene chloride polymer film.
   4. Material shall not contain or be produced with any of the U.S. EPA regulated CFC compounds listed in the Montreal Protocol of the United Nations Environmental Program.

1.5 APPLICATIONS

A. Exposed Interior Piping Systems
   1. Hydronic heating water
   2. Hydronic chilled water
   3. Hydronic heat pump condenser loop water
   4. Condensate drain
   5. Refrigerant suction and hot gas bypass

B. Concealed Interior Piping Systems
   1. Hydronic heating water
   2. Hydronic chilled water
   3. Hydronic heat pump condenser loop water
   4. Condensate drain
   5. Refrigerant suction and hot gas bypass

C. Exposed Exterior Piping Systems
   1. Refrigerant suction and hot gas bypass
   2. Hydronic chilled water
   3. Hydronic heating water

D. Concealed Exterior Piping Systems
   1. Refrigerant suction and hot gas bypass
   2. Hydronic chilled water
   3. Hydronic heating water

E. Concealed Piping Systems in Crawl Spaces or Other Moist Environments:
   1. Polyisocyanurate insulation required for cold services (chilled water) where 25/50 smoke/flame rating is not required, unless specific product is rated for such.

F. Indoor Equipment
   1. Chilled water equipment, tanks, pumps, and heat exchangers.
   2. Following items are not insulated:
      a. Factory-insulated plenums, casings, terminal boxes, and filter boxes and sections.
      b. Flexible connectors.
      c. Vibration control devices.
      d. Testing laboratory labels and stamps.
      e. Nameplates and data plates.
      f. Access panels and doors in air distribution systems.
      g. Factory insulated equipment such as boilers.

G. Ductwork Systems
   1. Interior concealed supply, return, and outside air ductwork.
   2. Interior exposed supply, return, and outside air ductwork.
   3. Exterior exposed supply and return ductwork.
   4. Kitchen range hood supply air ductwork.
   5. Items not insulated as a part of the Specification Section
      a. Metal ducts with duct liner.
      b. Factory-insulated flexible ducts.
      c. Factory-insulated plenums, casings, terminal boxes, and filter boxes and sections.
      d. Flexible connectors.
      e. Vibration control devices.
      f. Testing laboratory labels and stamps.
      g. Nameplates and data plates.
      h. Access panels and doors in air distribution systems.

H. Insulation Jacketing Systems
   1. Provide protective jacketing for all exposed pipe systems located in mechanical rooms, boiler rooms, and storage rooms.
   2. Provide protective jacketing for all exterior pipe systems.
   3. Provide protective jacketing for all exposed ductwork installations.

1.6 EXAMINATION AND PREPARATION

A. Leak test piping and ductwork system before installing insulation systems.

1.7 INSTALLATION

A. Install material in accordance with manufacturer's recommendations and in conformance with building codes and industry standards.

B. A continuous vapor barrier is required.

C. Provide proper support at piping hanger systems.

D. Insulate valves and fittings in cold water systems.

E. Ductwork insulation shall be wrapped in lieu of liner for all applications except for specific sound attenuation means.

F. All insulation shall be applied so that there is no fiberglass exposed to the air stream without filters downstream. All fiberglass insulation, including all exposed edges, shall be coated, or mylar or other suitable material shall be provided between fiberglass and the air stream. ***Elastomeric duct liner does not require coating or mylar.***

END OF SECTION

SECTION 230923

HVAC DIRECT DIGITAL CONTROLS

GENERAL ***GUIDELINES***

1.1 SECTION INCLUDES

A. Qualitative requirements for control equipment for HVAC systems and components, software requirements, and installation requirements for a complete HVAC direct digital control (DDC) electronic temperature control system.

1.2 SUBMITTALS

A. Submittals are required and shall include product descriptive literature demonstrating compliance with written specification and, at a minimum, shall include the following:
1. Equipment and component specifications.
2. Software capabilities and operation.
3. Graphics capabilities and proposed solutions.

1.3 QUALITY ASSURANCE

A. Electric components shall be UL Listed.

B. Damper components shall comply with AMCA 500.

C. Energy management components shall comply with NEMA EMCI.

D. Enclosures shall comply with NEMA 250.

E. Electrical requirements shall meet NFPA 70.

F. Installation as a part of the HVAC system shall comply with NFPA 90A.

G. System installation shall allow ***for application*** of the “BACnet” protocol to meet requirements of ASHRAE 135 or “Lonworks” protocol.

H. Control systems shall meet the requirements of ASHRAE Standard 90.1.

1.4 DAMPERS

A. Dampers shall be low-leakage type, as required to meet the requirements of ASHRAE Standard 90.1., not less than 22 gauge galvanized steel frames.

B. Modulating dampers shall be opposed blade type.

C. Dampers shall be sized for 1000 to 1500 FPM air velocity.

1.5 VALVES

A. Factory fabricated of type, body material, pressure class, and at a maximum 5 psi pressure drop.
   1. 2-way valves shall have equal percentage characteristics.
   2. 3-way valves shall have linear characteristics

B. Globe Valves
   1. Up to 2 inches: Bronze body, bronze trim, rising stem, renewable composition disc, screwed ends with back seating capacity repackable under pressure.
   2. Over 2 inches: Iron body, bronze trim, rising stem, plug-type disc, flanged ends, renewable seat and disc.
   3. Service at 125 psi WSP and 250 deg F.
   4. Internal construction shall be replaceable plugs and seats of stainless steel or brass.

C. Butterfly Valves
   1. Iron body, bronze, aluminum-bronze or stainless steel disc, resilient, replaceable seat for service to 200 deg F., lug ends, and extended neck.
   2. Service at 125 psi WSP and 250 deg F.

D. Terminal Unit Control Valves
   1. Bronze body, bronze trim, 2 or 3 port as indicated, replaceable plugs and seats, union and threaded ends.
   2. Service at 125 psi WSP and 250 deg F.

1.6 VALVE AND DAMPERS ACTUATORS

A. Damper actuators shall be electronic, low voltage. Actuator response shall be linear in response to sensed load.
   1. Dampers on outside air intakes/exhaust shall be spring return closed.

B. Valve operators shall be electronic, low voltage and properly selected for the valve body and service.
   1. Actuators shall be fully proportioning unless otherwise indicated.
   2. Heating water valve actuators in the path of outside air shall be spring return open.
   3. Cabinet heater and radiant ceiling panel valves shall be 2-position.

1.7 RELAYS

A. Relays shall be UL Listed and sized for not less than 140 percent of the connected amperage load.

1.8 SENSING DEVICES

A. Electronic Temperature Sensors.

B. Electronic Room Temperature Sensors.

C. Electronic Duct Temperature Sensors.

D. Electric Thermostats.

E. Sensor Guards.

F. Safety Low Limit Thermostats.

G. Electronic Pressure Sensors.

H. Humidity Sensors.

I. Current Sensing Status Switch.

J. Photo Sensitive Resistor.

K. Carbon Dioxide Sensors.

1.9 CONTROL CABINET/ENCLOSURES

A. Shall be constructed of extruded aluminum, galvanized steel, or factory-hardened plastic.

B. Enclosures for electrical devices shall be constructed of code gauge steel with a UL Label.

C. Panels shall be labeled with nameplates and legends as required.

D. Each major control cabinet/enclosure (minimum one per mechanical room) shall be equipped with a fold-out laptop shelf at an appropriate height. Provide a DDC connection port at each.

1.10 BUILDING AUTOMATION SYSTEM

A. The entire system shall utilize electric/electronic DDC technology and actuation. Pneumatics is not permitted.

B. Personal operator workstation complete with color monitor, internal modem, keyboard, and printer.

C. Host Computer Software
   1. Energy management report generation.
   2. Trend logs setup and storage.
   3. Alarm generation, status, and prioritization.
   4. User interface with English language applications.
   5. Dynamic graphics applications.

1.11 BUILDING AUTOMATION EQUIPMENT

A. Global Control Panel
   1. Central, microprocessor host controller

B. Software functions
   1. English language terminal mode interface
   2. Customized report generation
   3. Time and event based trending
   4. Maximum predictive algorithms
   5. Central system optimization
   6. Functional library of operations and applications

C. On-board modem of the latest Kbaud rate for external monitoring and serial connection.

D. AHU Controllers

E. Boiler Plant Unitary Controllers

F. VAV Terminal Controllers

G. Packaged Terminal Equipment Controllers

1.12 TEMPERATURE CONTROL WIRING

A. Where control wiring is installed in conduit, conduit shall be 2 inch minimum size.

B. Wiring in air plenums shall be open wired UL Listed plenum cable or it shall be installed in conduit.

C. Open wiring shall be secured with plastic tie wraps to permanent building structure.

D. Final wiring terminations shall be made by the Temperature Control Contractor.

1.13 INSTALLATION

A. Install in accordance with manufacturers requirements.

1.14 SEQUENCE OF OPERATION

A. Refer to Specification Section 230993 for all equipment sequences.

1.15 DAY/NIGHT ZONE CONTROL

A. Building zone control shall be through the DDC computer.

B. General exhaust fans shall be operated through zone control.

1.16 WARRANTY

A. All equipment shall be warranted for a period of ***two (2)*** years after issuance of Substantial Completion.

B. Temperature Control Contractor shall provide support for operation of the system and improvements to energy usage to the Owner throughout the first ***fifteen months*** of operation.

1.17 TRAINING

A. The system manufacturer shall provide on-site training on the operation of the complete DDC system.

B. All training shall be video-taped by the HVAC contractor. Two copies shall be turned over to the Owner's maintenance staff.

1.18 FINAL CHECK-TEST-START OF SYSTEM

A. Check and/or oil all electric motors furnished under control system.

B. Lubricate all damper bearings.

C. Check damper travel, adjust and tighten all set screws.

D. Lubricate valve stems, check packing.

E. Calibrate all instruments.

F. Check and verify all circuitry.

G. Calibrate and check all controllers, fusing, and electrical connections.

H. Run software through program diagnostics and debug as required.

I. Startup and test operation of variable frequency drive with factory authorized personnel.

END OF SECTION

SECTION 230993

SEQUENCE OF OPERATION FOR HVAC

GENERAL GUIDELINES

1.1 SECTION INCLUDES

A. Qualitative requirements for the Sequences of Operation for HVAC systems and terminal units.

1.2 SUBMITTALS

A. Submittals are required and shall include detailed descriptions of the proposed sequence of operations for all systems specific to the project.

B. The following information shall be submitted as a very minimum to the Engineer:
1. System diagrams denoting the operation of each individual system, folded to an equivalent 8-1/2 inch by 11 inch bound packet.
2. DDC logic diagrams.
3. Written sequences of operation with each specific diagram.

1.3 SYSTEM DESCRIPTION

A. Specific system sequences of operation shall be denoted as subsections to this section.

B. Sequences of operation shall meet the requirements of ASHRAE Standard 90.1.

1.4 The following control sequences are examples only. It is the responsibility of the design professional to provide the appropriate custom control sequences for each individual project. Any setpoints listed in these sequences are arbitrary and do not reflect specific requirements of OSFC.

A. Two Boiler System
1. Boiler System - Run Conditions:
a. The boiler system shall be enabled to run whenever outside air temperature is less than ***the unoccupied/occupied reset schedule.***
b. To prevent short cycling, each boiler shall run for and be off for minimum adjustable times (both user definable), unless shutdown on safeties or outside air conditions.
c. Each boiler shall run subject to its own internal safeties and controls.
d. The boiler system shall also run for freeze protection whenever the outside air temperature is less than 38°F (adj.).
2. Boiler 1 Safeties:
a. The following safeties shall be monitored:
1) Boiler alarm.
2) Low water level.
b. Alarms shall be provided as follows:
1) Boiler alarm.
2) Low water level alarm.
3. Boiler 2 Safeties:
a. The following safeties shall be monitored:
1) Boiler alarm.
2) Low water level.

b. Alarms shall be provided as follows:
   1) Boiler alarm.
   2) Low water level.

4. ***Primary*** Hot Water Pump Lead/Standby Operation:
   a. The two ***primary*** hot water pumps shall operate in a lead/standby fashion.
      1) The lead ***primary*** pump shall run first.
      2) On failure of the lead ***primary*** pump, the standby ***primary*** pump shall run and the lead ***primary*** pump shall turn off.
   b. The designated lead ***primary*** pump shall rotate upon one of the following conditions (user selectable):
      1) manually through a software switch
      2) weekly
      3) monthly
   c. Alarms shall be provided as follows:
      1) ***Primary*** Hot Water Pump 1
         a. Failure: Commanded on, but the status is off.
         b. Running in Hand: Commanded off, but the status is on.
      2) ***Primary*** Hot Water Pump 2
         a. Failure: Commanded on, but the status is off.
         b. Running in Hand: Commanded off, but the status is on.
5. ***Boiler*** Circulation Pump 1:
   a. ***Boiler*** Circulation Pump 1 shall run anytime Boiler 1 is called to run and shall have a user definable delay (adj.) on stop.
   b. Alarms shall be provided as follows:
      1) ***Boiler*** Circulation Pump 1 Failure: Commanded on, but the status is off.
      2) ***Boiler*** Circulation Pump 1 Running in Hand: Commanded off, but the status is on.
6. ***Boiler*** Circulation Pump 2:
   a. ***Boiler*** Circulation Pump 2 shall run anytime Boiler 2 is called to run and shall have a user definable delay (adj.) on stop.
   b. Alarms shall be provided as follows:
      1) ***Boiler*** Circulation Pump 2 Failure: Commanded on, but the status is off.
      2) ***Boiler*** Circulation Pump 2 Running in Hand: Commanded off, but the status is on.
7. Boiler Lead/Standby Operation:
   a. The two boilers shall operate in a lead/standby fashion when called to run and flow is proven.
      1) The lead boiler shall run first.
      2) On failure of the lead boiler, the standby boiler shall run and the lead boiler shall turn off.
   b. The designated lead boiler shall rotate upon one of the following conditions: (user selectable):
      1) manually through a software switch
      2) weekly
      3) monthly

c. Alarms shall be provided as follows:
   1) Boiler 1
      a. Failure: Commanded on but the status is off.
      b. Running in Hand: Commanded off but the status is on.
   2) Boiler 2
      a. Failure: Commanded on but the status is off.
      b. Running in Hand: Commanded off but the status is on.
      c. Lead Boiler Failure: The lead boiler is in failure and the standby boiler is on.

8. Hot Water Supply Temperature Setpoint Reset:
   a. The hot water supply temperature setpoint shall reset only after the variable flow secondary hot water pumps are operating at minimum speed. Hot water supply temperature reset shall be a continuation of the control loop for the pump speed. Hot water supply and return temperatures shall be maintained above minimums per boiler manufacturer's recommendations. Further consideration should be given to high efficiency boiler systems to optimize system efficiency (reset water temp starting at higher pump speed to allow boiler to operate at optimum efficiency).

9. Primary Hot Water Temperature Monitoring:
   a. The following temperatures shall be monitored:
      1) Primary hot water supply.
      2) Primary hot water return.
   b. Alarms shall be provided as follows:
      1) High Primary Hot Water Supply Temp: If greater than 200°F (adj.).
      2) Low Primary Hot Water Supply Temp: If less than 100°F (adj.).

10. Boiler 1 Hot Water Temperature Monitoring:
   a. The following temperatures shall be monitored:
      1) Boiler 1 hot water supply.
      2) Boiler 1 hot water return.
   b. Alarms shall be provided as follows:
      1) High Hot Water Supply Temp: If greater than 200°F (adj.).
      2) Low Hot Water Supply Temp: If less than 100°F (adj.).

11. Boiler 2 Hot Water Temperature Monitoring:
   a. The following temperatures shall be monitored:
      1) Boiler 2 hot water supply.
      2) Boiler 2 hot water return.
   b. Alarms shall be provided as follows:
      1) High Hot Water Supply Temp: If greater than 200°F (adj.).
      2) Low Hot Water Supply Temp: If less than 100°F (adj.).

B. Secondary Hot Water Pumps

1. Secondary Hot Water Pump Run Conditions:
   a. The secondary hot water pumps shall be enabled whenever outside air temperature is less than ***the unoccupied/occupied reset schedule.***
   b. The secondary pumps shall run for freeze protection anytime outside air temperature is less than 38°F (adj.).

c. To prevent short cycling, the secondary pumps shall run for and be off for minimum adjustable times (both user definable).

2. Secondary Hot Water Pump Lead/Standby Operation:
   a. The two secondary hot water pumps shall operate in a lead/standby fashion.
      1) The lead secondary pump shall run first.
      2) On failure of the lead secondary pump, the standby secondary pump shall run and the lead pump shall turn off.
   b. The designated lead secondary pump shall rotate upon one of the following conditions (user selectable):
      1) manually through a software switch
      2) weekly
      3) monthly
   c. Alarms shall be provided as follows:
      1) Secondary Hot Water Pump 1
         a) Failure: Commanded on, but the status is off.
         b) Running in Hand: Commanded off, but the status is on.
      2) Secondary Hot Water Pump 2
         a) Failure: Commanded on, but the status is off.
         b) Running in Hand: Commanded off, but the status is on.
3. Secondary Hot Water Pump Volume Control:
   a. A differential pressure sensor installed near the most remote heat exchanger shall monitor hot water system differential pressure.
   b. The hot water system differential pressure shall be reset based on heating valve position.
   c. The secondary hot water pump variable frequency drives shall be modulated to maintain hot water system differential pressure.

C. Single Air Cooled Chiller System
1. Chiller - Run Conditions:
   a. The chiller shall be enabled to run whenever the outside air temperature is greater than ***the unoccupied/occupied reset schedule.***
   b. To prevent short cycling, the chiller shall run for and be off for minimum adjustable times (both user definable), unless shutdown on safeties or outside air conditions.
   c. The chiller shall run subject to its own internal safeties and controls.
2. Chilled Water Pump:
   a. The chilled water pump shall run anytime the chiller is called to run. The chilled water pump shall also run for freeze protection whenever the outside air temperature is less than a user definable setpoint (adj.).
   b. The chilled water pump shall start prior to the chiller being enabled and shall stop only after the chiller is disabled. The chilled water pump shall therefore have:
      1) A user adjustable delay on start.
      2) AND a user adjustable delay on stop.
   c. The delay times shall be set appropriately to allow for orderly chilled water system start-up, shutdown and sequencing.

d. Alarms shall be provided as follows:
   1) Chilled Water Pump Failure: Commanded on, but the status is off.
   2) Chilled Water Pump Running in Hand: Commanded off, but the status is on.

3. Chiller:
   a. The chiller shall be enabled a ***after a*** user-adjustable time after pump statuses are proven on. The chiller shall therefore have a user adjustable delay on start.
   b. The delay time shall be set appropriately to allow for orderly chilled water system start-up, shutdown and sequencing.
   c. The chiller shall run subject to its own internal safeties and controls.
   d. Alarms shall be provided as follows:
      1) Chiller Failure: Commanded on, but the status is off.
      2) Chiller Running in Hand: Commanded off, but the status is on.
4. Chiller Chilled Water Supply Setpoint:
   a. The chiller shall maintain a chilled water supply temperature setpoint as determined by its own internal controls (provided by others).
5. Chilled Water Temperature Monitoring:
   a. The following temperatures shall be monitored:
      1) Chilled water supply.
      2) Chilled water return.
   b. Alarms shall be provided as follows:
      1) High Chilled Water Supply Temp: If the chilled water supply temperature is greater than 55°F (adj.).
      2) Low Chilled Water Supply Temp: If the chilled water supply temperature is less than 38°F (adj.).

D. Single Water Cooled Chiller System
1. Chiller - Run Conditions:
   a. The chiller shall be enabled to run whenever the outside air temperature is greater than the unoccupied/occupied reset schedule.
   b. To prevent short cycling, the chiller shall run for and be off for minimum adjustable times (both user definable), unless shutdown on safeties or outside air conditions.
   c. The chiller shall run subject to its own internal safeties and controls.
2. Refrigerant Detection:
   a. The chiller shall shut down and an alarm generated upon receiving a refrigerant leak detection status.
3. Chilled Water Pump:
   a. The chilled water pump shall run anytime the chiller is called to run. The chilled water pump shall also run for freeze protection whenever the outside air temperature is less than a user definable setpoint (adj.).
   b. The chilled water pump shall start prior to the chiller being enabled and shall stop only after the chiller is disabled. The chilled water pump shall therefore have:
      1) A user adjustable delay on start.
      2) AND a user adjustable delay on stop.
   c. The delay times shall be set appropriately to allow for orderly chilled water system start-up, shutdown and sequencing.

d. Alarms shall be provided as follows:
   1) Chilled Water Pump Failure: Commanded on, but the status is off.
   2) Chilled Water Pump Running in Hand: Commanded off, but the status is on.

4. Condenser Water Pump:
   a. The condenser water pump shall run anytime the chiller is called to run.
   b. The condenser water pump shall start prior to the chiller being enabled and shall stop only after the chiller is disabled. The condenser water pump shall therefore have:
      1) A user adjustable delay on start.
      2) AND a user adjustable delay on stop.
   c. The delay times shall be set appropriately to allow for orderly chilled water system start-up, shutdown and sequencing.
   d. Alarms shall be provided as follows:
      1) Condenser Water Pump Failure: Commanded on, but the status is off.
      2) Condenser Water Pump Running in Hand: Commanded off, but the status is on.

5. Chiller:
   a. The chiller shall be enabled a user adjustable time after pump statuses are proven on. The chiller shall therefore have a user adjustable delay on start.
   b. The delay time shall be set appropriately to allow for orderly chilled water system start-up, shutdown and sequencing.
   c. The chiller shall run subject to its own internal safeties and controls.
   d. Alarms shall be provided as follows:
      1) Chiller Failure: Commanded on, but the status is off.
      2) Chiller Running in Hand: Commanded off, but the status is on.

6. Chiller Chilled Water Supply Setpoint:
   a. The chiller shall maintain a chilled water supply temperature setpoint as determined by its own internal controls (provided by others).

7. Cooling Tower VFD Fan - Condenser Water Temperature Control:
   a. The controller shall measure the cooling tower condenser water supply (basin) temperature and modulate the bypass valve and fan VFD in sequence to maintain setpoints.
   b. The following setpoints are recommended values. All setpoints shall be field adjusted during the commissioning period to meet the requirements of actual field conditions.
   c. On rising supply temperature, the controller shall modulate the bypass valve to maintain setpoint of 78°F (adj.) and the fan VFD to maintain setpoint of 82°F (adj.).
   d. Alarms shall be provided as follows:
      1) Fan
         a) Failure: Commanded on, but the status is off.
         b) Running in Hand: Commanded off, but the status is on.
         c) VFD fault.
      2) High Cooling Tower Supply (Basin) Temp: If greater than 86°F (adj.).
      3) Low Cooling Tower Supply (Basin) Temp: If less than 38°F (adj.).

8. Chilled Water Temperature Monitoring:
   a. The following temperatures shall be monitored:
      1) Chilled water supply.
      2) Chilled water return.
   b. Alarms shall be provided as follows:
      1) High Chilled Water Supply Temp: If the chilled water supply temperature is greater than 55°F (adj.).
      2) Low Chilled Water Supply Temp: If the chilled water supply temperature is less than 38°F (adj.).
9. Condenser Water Temperature Monitoring:
   a. The following temperatures shall be monitored:
      1) Condenser water supply temperature.
      2) Condenser water return temperature.
   b. Alarms shall be provided as follows:
      1) High Condenser Water Supply Temp: If the condenser water supply temperature is greater than 86°F (adj.).
      2) Low Condenser Water Supply Temp: If the condenser water supply temperature is less than 65°F (adj.).
      3) High Condenser Water Return Temp: If the condenser water return temperature is greater than 100°F (adj.).
      4) Low Condenser Water Return Temp: If the condenser water return temperature is less than 75°F (adj.).

E. Cabinet Heater
1. Run Conditions - Continuous:
   a. The unit shall run continuously and shall maintain a heating setpoint of 70°F (adj.).
   b. Alarms shall be provided as follows:
      1) Low Zone Temp: If the zone temperature is less than the heating setpoint by a user definable amount (adj.).
2. Zone Setpoint Adjust:
   a. The occupant shall be able to adjust the zone temperature heating and cooling setpoints at the zone sensor.
3. Fan:
   a. The fan shall run anytime the zone temperature is below heating setpoint, unless shutdown on safeties.
4. Heating Coil Valve:
   a. The controller shall measure the zone temperature and modulate the heating coil valve to maintain its heating setpoint.
   b. The heating shall be enabled whenever:
      1) Outside air temperature is less than ***the unoccupied/ occupied reset schedule.***
      2) AND the zone temperature is below heating setpoint.
      3) AND the fan is on.

F. Unit Heater
1. Run Conditions - Continuous:
   a. The unit shall run continuously and shall maintain a heating setpoint of 70°F (adj.).
   b. Alarms shall be provided as follows:
      1) Low Zone Temp: If the zone temperature is less than the heating setpoint by a user definable amount (adj.).

2. Zone Setpoint Adjust:
   a. The occupant shall be able to adjust the zone temperature heating and cooling setpoints at the zone sensor.
3. Fan:
   a. The fan shall run anytime the zone temperature drops below heating setpoint, unless shutdown on safeties.
4. Heating Coil Valve:
   a. The controller shall measure the zone temperature and modulate the heating coil valve to maintain its heating setpoint.
   b. The heating shall be enabled whenever:
      1) Outside air temperature is less than ***the unoccupied/ occupied reset schedule.***
      2) AND the zone temperature is below heating setpoint.
      3) AND the fan is on.

G. Convective / Fin Tube Heater
1. Run Conditions - Continuous:
   a. The unit shall run continuously and shall maintain a heating setpoint of 70°F (adj.).
   b. Alarms shall be provided as follows:
      1) Low Zone Temp: If the zone temperature is less than the heating setpoint by a user definable amount (adj.).
2. Heating Coil Valve:
   a. The controller shall measure the zone temperature and modulate the heating coil valve to maintain its heating setpoint.
   b. The heating shall be enabled whenever:
      1) Outside air temperature is less than ***the unoccupied/ occupied reset schedule.***
      2) AND the zone temperature is below heating setpoint.

H. Exhaust Fan - Building Static
1. Run Conditions - Interlocked:
   a. The unit(s) EF --- shall be interlocked to run whenever Air Handling Unit ---- runs unless shutdown on safeties.
2. Control - Building Static Pressure:
   a. The controller shall measure building static pressure and stage the exhaust fan on and off to maintain a building static pressure setpoint of 0.05in H_2O (adj.). The fan shall have a user definable (adj.) minimum runtime.
   b. Alarms shall be provided as follows:
      1) High Building Static Pressure: If the building static pressure is 25% (adj.) greater than setpoint.
      2) Low Building Static Pressure: If the building static pressure is 25% (adj.) less than setpoint.
3. Exhaust Air Damper:
   a. The exhaust air damper shall open anytime the unit runs and shall close anytime the unit stops. The exhaust air damper shall close 30 sec (adj.) after the fan stops.
4. Fan Status:
   a. The controller shall monitor the fan status.
   b. Alarms shall be provided as follows:

1) Fan Failure: Commanded on, but the status is off.
2) Fan in Hand: Commanded off, but the status is on.

I. Variable Air Volume - AHU

1. Run Conditions - Scheduled:
   a. The unit shall run based upon an operator adjustable schedule.
2. Freeze Protection:
   a. The unit shall shut down and generate an alarm upon receiving a freezestat status.
3. High Static Shutdown:
   a. The unit shall shut down and generate an alarm upon receiving an high static shutdown signal.
4. Supply Air Smoke Detection:
   a. The unit shall shut down and generate an alarm upon receiving a supply air smoke detector status.
5. Supply Fan:
   a. The supply fan shall run anytime the unit is commanded to run, unless shutdown on safeties. To prevent short cycling, the supply fan shall have a user definable (adj.) minimum runtime.
   b. Alarms shall be provided as follows:
      1) Supply Fan Failure: Commanded on, but the status is off.
      2) Supply Fan in Hand: Commanded off, but the status is on.
      3) Supply Fan Runtime Exceeded: Status runtime exceeds a user definable limit (adj.).
6. Supply Air Duct Static Pressure Control:
   a. The controller shall measure duct static pressure and shall modulate the supply fan VFD speed to maintain a duct static pressure setpoint of 1.5in H_2O (adj.). The supply fan VFD speed shall not drop below 30% (adj.).
   b. Alarms shall be provided as follows:
      1) High Supply Air Static Pressure: If the supply air static pressure is 25% (adj.) greater than setpoint.
      2) Low Supply Air Static Pressure: If the supply air static pressure is 25% (adj.) less than setpoint.
      3) Supply Fan VFD Fault.
7. Return Fan:
   a. The return fan shall run whenever the supply fan runs.
   b. Alarms shall be provided as follows:
      1) Return Fan Failure: Commanded on, but the status is off.
      2) Return Fan in Hand: Commanded off, but the status is on.
      3) Return Fan Runtime Exceeded: Status runtime exceeds a user definable limit (adj.).
      4) Return Fan VFD Fault.
8. Building Static Pressure Control:
   a. The controller shall measure building static pressure and modulate the return fan VFD speed to maintain a building static pressure setpoint of 0.05in H_2O (adj.). The return fan VFD speed shall not drop below 20% (adj.).
   b. Alarms shall be provided as follows:
      1) High Building Static Pressure: If the building air static pressure is 25% (adj.) greater than setpoint.

2) Low Building Static Pressure: If the building air static pressure is 25% (adj.) less than setpoint.

9. Heat Recovery Wheel - Constant Speed:
   a. The controller shall run the heat recovery wheel for energy recovery as follows.
      1) Cooling Recovery Mode: The controller shall measure the heat wheel discharge air temperature and run the heat wheel to maintain a setpoint 2°F (adj.) less than the unit supply air temperature setpoint. The heat wheel shall run for cool recovery whenever:
         a) The unit return air temperature is 5°F (adj.) or more below the outside air temperature.
         b) AND the unit is in a cooling mode.
         c) AND the economizer (if present) is off.
         d) AND the supply fan is on.
      2) Heating Recovery Mode: The controller shall measure the heat wheel discharge air temperature and run the heat wheel to maintain a setpoint 2°F (adj.) greater than the unit supply air temperature setpoint. The heat wheel shall run for heat recovery whenever:
         a) The unit return air temperature is 5°F (adj.) or more above the outside air temperature.
         b) AND the unit is in a heating mode.
         c) AND the economizer (if present) is off.
         d) AND the supply fan is on.
   b. Periodic Self-Cleaning:
      1) The heat wheel shall run for 10sec (adj.) every 4hr (adj.) the unit runs.
   c. Frost Protection:
      1) The heat wheel shall run for 10sec (adj.) every 600sec (adj.) whenever:
         a) Outside air temperature drops below 15°F (adj.)
         b) OR the exhaust air temperature drops below 20°F (adj.).
   d. The heat wheel bypass dampers will open whenever the heat wheel is disabled.
   e. Alarms shall be provided as follows:
      1) Heat Wheel Rotation Failure: Commanded on, but the status is off.
      2) Heat Wheel in Hand: Commanded off, but the status is on.
      3) Heat Wheel Runtime Exceeded: Status runtime exceeds a user definable limit (adj.).

10. Preheating Coil Valve:
   a. The controller shall measure the mixed air temperature and modulate the preheating coil valve to maintain its setpoint 5°F (adj.) less than the supply air temperature setpoint.
   b. The preheating shall be enabled whenever:
      1) Outside air temperature is less than 60°F (adj.).
      2) AND the economizer (if present) is disabled.
      3) AND the supply fan status is on.

c. The preheating coil valve shall open for freeze protection whenever:
   1) Mixed air temperature drops from 40°F to 35°F (adj.).
   2) OR the freezestat (if present) is on.

11. Supply Air Temperature Setpoint - Optimized:
   a. The controller shall monitor the supply air temperature and shall maintain a supply air temperature setpoint reset based on zone cooling and heating requirements
   b. The supply air temperature setpoint shall be reset for cooling based on zone cooling requirements as follows:
      1) The initial supply air temperature setpoint shall be 55°F (adj.).
      2) As cooling demand increases, the setpoint shall incrementally reset down to a minimum of 53°F (adj.).
      3) As cooling demand decreases, the setpoint shall incrementally reset up to a maximum of 72°F (adj.) .
   c. If more zones need heating than cooling, then the supply air temperature setpoint shall be reset for heating as follows:
      1) The initial supply air temperature setpoint shall be 82°F (adj.).
      2) As heating demand increases, the setpoint shall incrementally reset up to a maximum of 85°F (adj.).
      3) As heating demand decreases, the setpoint shall incrementally reset down to a minimum of 72°F (adj.).

12. Cooling Coil Valve:
   a. The controller shall measure the supply air temperature and modulate the cooling coil valve to maintain its cooling setpoint.
   b. The cooling shall be enabled whenever:
      1) Outside air temperature is greater than ***the unoccupied/ occupied reset schedule.***
      2) AND the economizer (if present) is disabled or fully open.
      3) AND the supply fan status is on.
      4) AND the heating (if present) is not active.
   c. The cooling coil valve shall open to 50% (adj.) whenever the freezestat (if present) is on.
   d. Alarms shall be provided as follows:
      1) High Supply Air Temp: If the supply air temperature is 5°F (adj.) greater than setpoint.

13. Heating Coil Valve:
   a. The controller shall measure the supply air temperature and modulate the heating coil valve to maintain its heating setpoint.
   b. The heating shall be enabled whenever:
      1) Outside air temperature is less than ***the unoccupied/ occupied reset schedule.***
      2) AND the supply fan status is on.
      3) AND the cooling (if present) is not active.
   c. The heating coil valve shall open whenever:
      1) Supply air temperature drops from 40°F to 35°F (adj.).
      2) OR the freezestat (if present) is on.
   d. Alarms shall be provided as follows:
      1) Low Supply Air Temp: If the supply air temperature is 5°F (adj.) less than setpoint.

14. Preheating Coil Pump:
   a. The recirculation pump shall run whenever:

1) The preheating coil valve is enabled.
2) OR the freezestat (if present) is on.

b. Alarms shall be provided as follows:
1) Preheating Coil Pump Failure: Commanded on, but the status is off.
2) Preheating Coil Pump in Hand: Commanded off, but the status is on.
3) Preheating Coil Pump Runtime Exceeded: Status runtime exceeds a user definable limit.

15. Economizer:

a. The controller shall measure the mixed air temperature and modulate the economizer dampers in sequence to maintain a setpoint 2°F (adj.) less than the supply air temperature setpoint. The outside air dampers shall maintain a minimum adjustable position of 20% (adj.) open whenever occupied.

b. The economizer shall be enabled whenever:
1) Outside air temperature is less than 65°F (adj.).
2) AND the outside air enthalpy is less than 22Btu/lb (adj.)
3) AND the outside air temperature is less than the return air temperature.
4) AND the outside air enthalpy is less than the return air enthalpy.
5) AND the supply fan status is on.

c. The economizer shall close whenever:
1) Mixed air temperature drops from 40°F to 35°F (adj.)
2) OR the freezestat (if present) is on.
3) OR on loss of supply fan status.

d. The outside and exhaust air dampers shall close and the return air damper shall open when the unit is off. If Optimal Start Up is available the mixed air damper shall operate as described in the occupied mode except that the outside air damper shall modulate to fully closed.

16. Minimum Outside Air Ventilation:

a. When in the occupied mode, the controller shall measure the outside airflow and modulate the outside air dampers to maintain the proper minimum outside air ventilation, overriding normal damper control. On dropping outside airflow, the controller shall modulate the outside air dampers open to maintain the outside airflow setpoint (adj.).

17. Dehumidification:

a. The controller shall measure the return air humidity and override the cooling sequence to maintain return air humidity at or below 60% rh (adj.). Dehumidification shall be enabled whenever the supply fan status is on.

18. Prefilter Status:

a. The controller shall monitor the prefilter status.

b. Alarms shall be provided as follows:
1) Prefilter Change Required: Prefilter differential pressure exceeds a user definable limit (adj.).

19. Final Filter Status:

a. The controller shall monitor the final filter status.

b. Alarms shall be provided as follows:
   1) Final Filter Change Required: Final filter differential pressure exceeds a user definable limit (adj.).

20. Mixed Air Temperature:
   a. The controller shall monitor the mixed air temperature and use as required for economizer control (if present) or preheating control (if present).
   b. Alarms shall be provided as follows:
      1) High Mixed Air Temp: If the mixed air temperature is greater than 90°F (adj.).
      2) Low Mixed Air Temp: If the mixed air temperature is less than 45°F (adj.).

21. Return Air Humidity:
   a. The controller shall monitor the return air humidity and use as required for economizer control (if present) or humidity control (if present).
   b. Alarms shall be provided as follows:
      1) High Return Air Humidity: If the return air humidity is greater than 70% (adj.).
      2) Low Return Air Humidity: If the return air humidity is less than 35% (adj.).

22. Return Air Temperature:
   a. The controller shall monitor the return air temperature and use as required for setpoint control or economizer control (if present).
   b. Alarms shall be provided as follows:
      1. High Return Air Temp: If the return air temperature is greater than 90°F (adj.).
      2. Low Return Air Temp: If the return air temperature is less than 45°F (adj.).

23. Supply Air Temperature:
   a. The controller shall monitor the supply air temperature.
   b. Alarms shall be provided as follows:
      1) High Supply Air Temp: If the supply air temperature is greater than 120°F (adj.).
      2) Low Supply Air Temp: If the supply air temperature is less than 45°F (adj.).

24. Zone Optimal Start:
   a. The unit shall use an optimal start algorithm for morning startup. This algorithm shall minimize the unoccupied warm-up or cool-down period while still achieving comfort conditions by the start of scheduled occupied period.

J. Variable Air Volume - Terminal Unit

1. Run Conditions - Scheduled:
   a. The unit shall run according to a user definable time schedule in the following modes:
      1) Occupied Mode: The unit shall maintain
         a) A 75°F (adj.) cooling setpoint
         b) A 70°F (adj.) heating setpoint.
      2) Unoccupied Mode (night setback): The unit shall maintain
         a) A 85°F (adj.) cooling setpoint.

b) A 55°F (adj.) heating setpoint.

b. Alarms shall be provided as follows:

1) High Zone Temp: If the zone temperature is greater than the cooling setpoint by a user definable amount (adj.).

2) Low Zone Temp: If the zone temperature is less than the heating setpoint by a user definable amount (adj.).

2. Zone Setpoint Adjust:

a. The occupant shall be able to adjust the zone temperature heating and cooling setpoints at the zone sensor.

3. Zone Unoccupied Override:

a. A timed local override control shall allow an occupant to override the schedule and place the unit into an occupied mode for an adjustable period of time. At the expiration of this time, control of the unit shall automatically return to the schedule.

4. Reversing Variable Volume Terminal Unit - Flow Control:

a. The unit shall maintain zone setpoints by controlling the airflow through one of the following:

1) Occupied:

a) When zone temperature is greater than its cooling setpoint, the zone damper shall modulate between the minimum occupied airflow (adj.) and the maximum cooling airflow (adj.) until the zone is satisfied.

b) When the zone temperature is between the cooling setpoint and the heating setpoint, the zone damper shall maintain the minimum required zone ventilation (adj.).

c) When zone temperature is less than its heating setpoint, the controller shall enable heating to maintain the zone temperature at its heating setpoint. Additionally, if warm air is available from the AHU, the zone damper shall modulate between the minimum occupied airflow (adj.) and the maximum heating airflow (adj.) until the zone is satisfied.

2) Unoccupied:

a) When the zone is unoccupied the zone damper shall control to its minimum unoccupied airflow (adj.).

b) When the zone temperature is greater than its cooling setpoint, the zone damper shall modulate between the minimum unoccupied airflow (adj.) and the maximum cooling airflow (adj.) until the zone is satisfied.

c) When zone temperature is less than its unoccupied heating setpoint, the controller shall enable heating to maintain the zone temperature at the setpoint. Additionally, if warm air is available from the AHU, the zone damper shall modulate between the minimum unoccupied airflow (adj.) and the auxiliary heating airflow (adj.) until the zone is satisfied.

5. Reheating Coil Valve:

a. The controller shall measure the zone temperature and modulate the reheating coil valve open on dropping temperature to maintain its heating setpoint.

6. Discharge Air Temperature:

a. The controller shall monitor the discharge air temperature.

b. Alarms shall be provided as follows:
   1) High Discharge Air Temp: If the discharge air temperature is greater than 120°F (adj.).
   2) Low Discharge Air Temp: If the discharge air temperature is less than 40°F (adj.).

K. Fan Powered Variable Air Volume - Terminal Unit
1. Run Conditions - Scheduled:
   a. The unit shall run according to a user definable time schedule in the following modes:
      1) Occupied Mode: The unit shall maintain
         a) A 75°F (adj.) cooling setpoint
         b) A 70°F (adj.) heating setpoint.
      2) Unoccupied Mode (night setback): The unit shall maintain
         a) A 85°F (adj.) cooling setpoint.
         b) A 55°F (adj.) heating setpoint.
   b. Alarms shall be provided as follows:
      1) High Zone Temp: If the zone temperature is greater than the cooling setpoint by a user definable amount (adj.).
      2) Low Zone Temp: If the zone temperature is less than the heating setpoint by a user definable amount (adj.).
2. Zone Setpoint Adjust:
   a. The occupant shall be able to adjust the zone temperature heating and cooling setpoints at the zone sensor.
3. Zone Unoccupied Override:
   a. A timed local override control shall allow an occupant to override the schedule and place the unit into an occupied mode for an adjustable period of time. At the expiration of this time, control of the unit shall automatically return to the schedule.
4. Reversing Variable Volume Terminal Unit - Flow Control:
   a. The unit shall maintain zone setpoints by controlling the airflow through one of the following:
      1) Occupied:
         a) When zone temperature is greater than its cooling setpoint, the zone damper shall modulate between the minimum occupied airflow (adj.) and the maximum cooling airflow (adj.) until the zone is satisfied.
         b) When the zone temperature is between the cooling setpoint and the heating setpoint, the zone damper shall maintain the minimum required zone ventilation (adj.).
         c) When zone temperature is less than its heating setpoint, the controller shall enable heating to maintain the zone temperature at its heating setpoint. Additionally, if warm air is available from the AHU, the zone damper shall modulate between the minimum occupied airflow (adj.) and the maximum heating airflow (adj.) until the zone is satisfied.
      2) Unoccupied:
         a) When the zone is unoccupied the zone damper shall control to its minimum unoccupied airflow (adj.).

b) When the zone temperature is greater than its cooling setpoint, the zone damper shall modulate between the minimum unoccupied airflow (adj.) and the maximum cooling airflow (adj.) until the zone is satisfied.

c) When zone temperature is less than its unoccupied heating setpoint, the controller shall enable heating to maintain the zone temperature at the setpoint. Additionally, if warm air is available from the AHU, the zone damper shall modulate between the minimum unoccupied airflow (adj.) and the auxiliary heating airflow (adj.) until the zone is satisfied.

5. Fan Control - Parallel:
   a. The fan shall run whenever the zone controller calls for heat. The fan shall run for a minimum user definable time (adj.).
6. Fan Control – Series:
   a. The fan shall run whenever the system is in the occupied mode.
7. Reheating Coil Valve:
   a. The controller shall measure the zone temperature and modulate the reheating coil valve open on dropping temperature to maintain its heating setpoint.
8. Discharge Air Temperature:
   a. The controller shall monitor the discharge air temperature.
   b. Alarms shall be provided as follows:
      1) High Discharge Air Temp: If the discharge air temperature is greater than 120°F (adj.).
      2) Low Discharge Air Temp: If the discharge air temperature is less than 40°F (adj.).

L. Single Zone Unit
1. Run Conditions - Scheduled:
   a. The unit shall run according to a user definable time schedule in the following modes:
      1) Occupied Mode: The unit shall maintain
         a) A 75°F (adj.) cooling setpoint
         b) A 70°F (adj.) heating setpoint.
      2) Unoccupied Mode (night setback): The unit shall maintain
         a) A 85°F (adj.) cooling setpoint.
         b) A 55°F (adj.) heating setpoint.
   b. Alarms shall be provided as follows:
      1) High Zone Temp: If the zone temperature is greater than the cooling setpoint by a user definable amount (adj.).
      2) Low Zone Temp: If the zone temperature is less than the heating setpoint by a user definable amount (adj.).
2. Zone Setpoint Adjust:
   a. The occupant shall be able to adjust the zone temperature heating and cooling setpoints at the zone sensor.
3. Zone Optimal Start:
   a. The unit shall use an optimal start algorithm for morning start-up. This algorithm shall minimize the unoccupied warm-up or cool-down period while still achieving comfort conditions by the start of scheduled occupied period.

4. Zone Unoccupied Override:
   a. A timed local override control shall allow an occupant to override the schedule and place the unit into an occupied mode for an adjustable period of time. At the expiration of this time, control of the unit shall automatically return to the schedule.
5. Freeze Protection:
   a. The unit shall shut down and generate an alarm upon receiving a freezestat status.
6. Supply Air Smoke Detection:
   a. The unit shall shut down and generate an alarm upon receiving a supply air smoke detector status.
7. Supply Fan:
   a. The supply fan shall run anytime the unit is commanded to run, unless shutdown on safeties. To prevent short cycling, the supply fan shall have a user definable (adj.) minimum runtime.
   b. Alarms shall be provided as follows:
      1) Supply Fan Failure: Commanded on, but the status is off.
      2) Supply Fan in Hand: Commanded off, but the status is on.
8. Heat Recovery Wheel - Constant Speed:
   a. The controller shall run the heat recovery wheel for energy recovery as follows.
      1) Cooling Recovery Mode: The controller shall measure the zone temperature and run the heat recovery wheel to maintain a setpoint 2°F (adj.) less than the zone cooling setpoint. The heat wheel shall run for cool recovery whenever:
         a) Return air temperature is 5°F (adj.) or more below the outside air temperature.
         b) AND the zone temperature is above cooling setpoint.
         c) AND the economizer (if present) is off.
         d) AND the supply fan is on.
      2) Heating Recovery Mode: The controller shall measure the zone temperature and run the heat recovery wheel to maintain a setpoint 2°F (adj.) greater than the zone heating setpoint. The heat wheel shall run for heat recovery whenever:
         a) Return air temperature is 5°F (adj.) or more above the outside air temperature.
         b) AND the zone temperature is below heating setpoint.
         c) AND the economizer (if present) is off.
         d) AND the supply fan is on.
   b. Periodic Self-Cleaning:
      1) The heat wheel shall run for 10sec (adj.) every 4hr (adj.) the unit runs.
   c. Frost Protection:
      1) The heat wheel shall run for 10sec (adj.) every 600sec (adj.) whenever:
         a) Outside air temperature drops below 15°F (adj.)
         b) OR the exhaust air temperature drops below 20°F (adj.).
   d. The heat wheel bypass dampers will open whenever the heat wheel is disabled.

e. Alarms shall be provided as follows:
   1) Heat Wheel Rotation Failure: Commanded on, but the status is off.
   2) Heat Wheel in Hand: Commanded off, but the status is on.
   3) Heat Wheel Runtime Exceeded: Status runtime exceeds a user definable limit (adj.).

9. Preheating Coil Valve:
   a. The controller shall measure the mixed air temperature and modulate the preheating coil valve to maintain its setpoint 10°F (adj.) less than the zone heating setpoint.
   b. The preheating shall be enabled whenever:
      1) Outside air temperature is less than 55°F (adj.).
      2) AND the economizer (if present) is disabled.
      3) AND the heating is active.
      4) AND cooling is not active.
      5) AND the supply fan status is on.
   c. The preheating coil valve shall open for freeze protection whenever:
      1) Mixed air temperature drops from 40°F to 35°F (adj.).
      2) OR the freezestat (if present) is on.

10. Cooling Coil Valve:
   a. The controller shall measure the zone temperature and modulate the cooling coil valve to maintain its cooling setpoint.
   b. The cooling shall be enabled whenever:
      1) Outside air temperature is greater than ***the unoccupied/ occupied reset schedule.***
      2) AND the economizer (if present) is disabled or fully open.
      3) AND the zone temperature is above cooling setpoint.
      4) AND the supply fan status is on.
      5) AND the heating is not active.
   c. The cooling coil valve shall open to 50% (adj.) whenever the freezestat (if present) is on.

11. Heating Coil Valve:
   a. The controller shall measure the zone temperature and modulate the heating coil valve to maintain its heating setpoint.
   b. The heating shall be enabled whenever:
      1) Outside air temperature is less than ***the unoccupied/ occupied reset schedule.***
      2) AND the zone temperature is below heating setpoint.
      3) AND the supply fan status is on.
      4) AND the cooling is not active.
      c. The heating coil valve shall open whenever the freezestat (if present) is on.

12. Economizer:
   a. The controller shall measure the zone temperature and modulate the economizer dampers in sequence to maintain a setpoint 2°F less than the zone cooling setpoint. The outside air dampers shall maintain a minimum adjustable position of 20Btu/lb (adj.) open whenever occupied.
   b. The economizer shall be enabled whenever:
      1) Outside air temperature is less than 65°F (adj.).
      2) AND the outside air enthalpy is less than 22Btu/lb (adj.).

3) AND the outside air temperature is less than the return air temperature.
4) AND the outside air enthalpy is less than the return air enthalpy.
5) AND the supply fan status is on.

c. The economizer shall close whenever:
1) Mixed air temperature drops from 45°F to 40°F (adj.).
2) OR on loss of supply fan status.
3) OR freezestat (if present) is on.

d. The outside and exhaust air dampers shall close and the return air damper shall open when the unit is off. If Optimal Start Up is available, the mixed air damper shall operate as described in the occupied mode except that the outside air damper shall modulate to fully closed.

13. Minimum Outside Air Ventilation - Fixed Percentage:
a. The outside air dampers shall maintain a minimum position (adj.) during building occupied hours and be closed during unoccupied hours.

14. Dehumidification:
a. The controller shall measure the return air humidity and override the cooling sequence to maintain return air humidity at or below 60% rh (adj.). Dehumidification shall be enabled whenever the supply fan status is on.

15. Prefilter Status:
a. The controller shall monitor the prefilter status.
b. Alarms shall be provided as follows:
1) Prefilter Change Required: Prefilter differential pressure exceeds a user definable limit (adj.).

16. Final Filter Status:
a. The controller shall monitor the final filter status.
b. Alarms shall be provided as follows:
1) Final Filter Change Required: Final filter differential pressure exceeds a user definable limit (adj.).

17. Mixed Air Temperature:
a. The controller shall monitor the mixed air temperature and use as required for economizer control (if present) or preheating control (if present).
b. Alarms shall be provided as follows:
1) High Mixed Air Temp: If the mixed air temperature is greater than 90°F (adj.).
2) Low Mixed Air Temp: If the mixed air temperature is less than 45°F (adj.).

18. Return Air Humidity:
a. The controller shall monitor the return air humidity and use as required for economizer control (if present) or humidity control (if present).
b. Alarms shall be provided as follows:
1) High Return Air Humidity: If the return air humidity is greater than 70% (adj.).
2) Low Return Air Humidity: If the return air humidity is less than 35% (adj.).

19. Return Air Temperature:
    a. The controller shall monitor the return air temperature and use as required for economizer control (if present).
    b. Alarms shall be provided as follows:
        1) High Return Air Temp: If the return air temperature is greater than 90°F (adj.).
        2) Low Return Air Temp: If the return air temperature is less than 45°F (adj.).
20. Supply Air Temperature:
    a. The controller shall monitor the supply air temperature.
    b. Alarms shall be provided as follows:
        1) High Supply Air Temp: If the supply air temperature is greater than 120°F (adj.).
        2) Low Supply Air Temp: If the supply air temperature is less than 45°F (adj.).

M. Makeup Air Unit - Supply Air Temp
1. Run Conditions - Interlocked:
    a. The unit MAU --- shall be interlocked to run whenever Air Handling Unit ---- runs unless shutdown on safeties.
2. Freeze Protection:
    a. The unit shall shut down and generate an alarm upon receiving a freezestat status.
3. Outside Air Damper:
    a. The outside air damper shall open anytime the unit runs and shall close anytime the unit stops. The supply fan shall start only after the damper status has proven the damper is open. The outside air damper shall close 4sec (adj.) after the supply fan stops.
    b. Alarms shall be provided as follows:
        1) Outside Air Damper Failure: Commanded open, but the status is closed.
        2) Outside Air Damper in Hand: Commanded closed, but the status is open.
4. Supply Fan:
    a. The supply fan shall run anytime the unit is commanded to run. To prevent short cycling, the supply fan shall have a user definable (adj.) minimum runtime, unless shutdown on safeties.
    b. Alarms shall be provided as follows:
        1) Supply Fan Failure: Commanded on, but the status is off.
        2) Supply Fan in Hand: Commanded off, but the status is on.
5. Exhaust Fan:
    a. The exhaust fan shall run whenever the supply fan runs, unless shutdown on safeties.
    b. Alarms shall be provided as follows:
        1) Exhaust Fan Failure: Commanded on, but the status is off.
        2) Exhaust Fan in Hand: Commanded off, but the status is on.
6. Supply Air Temperature Setpoint - Fixed:
    a. The controller shall monitor the supply air temperature and shall maintain a supply air temperature setpoint ***based on a reset schedule.***
7. Cooling Coil Valve:
    a. The controller shall measure the supply air temperature and

modulate the cooling coil valve to maintain its cooling setpoint.

b. The cooling shall be enabled whenever:
   1) Outside air temperature is greater than ***the unoccupied/ occupied reset schedule.***
   2) AND the supply air temperature is above cooling setpoint.
   3) AND the fan status is on.

c. The cooling coil valve shall open to 50% (adj.) whenever the freezestat is on.

8. Heating Coil Valve:
   a. The controller shall measure the supply air temperature and modulate the heating coil valve to maintain its heating setpoint.
   b. The heating shall be enabled whenever:
      1) Outside air temperature is less than ***the unoccupied/ occupied reset schedule.***
      2) AND the supply air temperature is below heating setpoint.
      3) AND the fan status is on.
   c. The heating coil valve shall open to 100% (adj.) whenever the freezestat is on.
9. Prefilter Status:
   a. The controller shall monitor the prefilter status.
   b. Alarms shall be provided as follows:
      1) Prefilter Change Required: Prefilter differential pressure exceeds a user definable limit (adj.).
10. Supply Air Temperature:
   a. The controller shall monitor the supply air temperature.
   b. Alarms shall be provided as follows:
      1) High Supply Air Temp: If the supply air temperature is greater than 120°F (adj.).
      2) Low Supply Air Temp: If the supply air temperature is less than 45°F (adj.).

N. Water Source Heat Pump (typical of 1)
1. Run Conditions - Scheduled:
   a. The unit shall run according to a user definable time schedule in the following modes:
      1) Occupied Mode: The unit shall maintain
         a) A 75°F (adj.) cooling setpoint
         b) A 72°F (adj.) heating setpoint
      2) Unoccupied Mode (night setback): The unit shall maintain
         a) A 85°F (adj.) cooling setpoint.
         b) A 55°F (adj.) heating setpoint.
         c) 60 – 65% RH zone space humidity
   b. Alarms shall be provided as follows:
      1) High Zone Temp: If the zone temperature is greater than the cooling setpoint by a user definable amount (adj.).
      2) Low Zone Temp: If the zone temperature is less than the heating setpoint by a user definable amount (adj.).
2. Freeze Protection:
   a. The unit shall shut down and generate an alarm upon receiving a freezestat status.

3. Smoke Detection:
   a. The unit shall shut down and generate an alarm upon receiving a smoke detector status.
4. Zone Setpoint Adjust:
   a. The occupant shall be able to adjust the zone temperature heating and cooling setpoints at the zone sensor.
5. Zone Optimal Start:
   a. The unit shall use an optimal start algorithm for morning start-up. This algorithm shall minimize the unoccupied warm-up or cool-down period while still achieving comfort conditions by the start of scheduled occupied period.
6. Zone Unoccupied Override:
   a. A timed local override control shall allow an occupant to override the schedule and place the unit into an occupied mode for an adjustable period of time. At the expiration of this time, control of the unit shall automatically return to the schedule.
7. Fan:
   a. The fan shall run anytime the unit is commanded to run, unless shutdown on safeties.
8. Heating and Cooling - 1 Compressor Stage:
   a. The controller shall receive a signal from the loop water source monitor indicating that there is water flow and that the water temperature is within acceptable limits.
   b. The controller shall measure the zone temperature and cycle the compressor to maintain its setpoint. To prevent short cycling, the stage shall have a user definable (adj.) minimum runtime. The compressor shall run subject to its own internal safeties and controls.
   c. The heating shall be enabled whenever:
      1) Outside air temperature is less than ***the unoccupied/ occupied reset schedule.***
      2) AND the fan is on.
      3) AND the reversing valve is in heat mode.
   d. The cooling shall be enabled whenever:
      1) Outside air temperature is greater than ***the unoccupied/ occupied reset schedule.***
      2) the fan is on.
      3) AND the reversing valve is in cool mode.
   e. The compressor shall be disabled and remain off for 30sec (adj.) after the reversing valve has changed position.
   f. Alarms shall be provided as follows:
      1) Compressor Runtime Exceeded: The compressor runtime exceeds a user definable limit (adj.).
9. Outside Air Dampers:
   a. The outside air damper shall open to provide a fixed percentage outside air ventilation anytime the unit runs and shall close anytime the unit stops. The damper open position shall be set during testing and balancing. The outside air damper shall close 1sec (adj.) after the fan stops.
   b. If Optimal Start Up is available the outside air damper shall close and the return air damper shall open.
10. Filter Status:
    a. The controller shall monitor the filter status.

b. Alarms shall be provided as follows:
   1) Filter Change Required: Filter differential pressure exceeds a user definable limit (adj.).

11. Discharge Air Temperature:
   a. The controller shall monitor the discharge air temperature. Alarms shall be provided as follows:
      1) High Discharge Air Temp: If the discharge air temperature is greater than 120°F (adj.).
      2) Low Discharge Air Temp: If the discharge air temperature is less than 40°F (adj.).

12. Fan Status:
   a. The controller shall monitor the fan status.
   b. Alarms shall be provided as follows:
      1) Fan Failure: Commanded on, but the status is off.
      2) Fan in Hand: Commanded off, but the status is on.

O. Loop Monitor and Pumps (typical of 1)

1. Water Source Heat Pump Loop Monitor - Run Conditions:
   a. The loop monitor shall run whenever:
      1) Any zone is occupied.
      2) OR a definable number of unoccupied zones need heating or cooling.
   b. The following loop water conditions shall be monitored:
      1) Flow status.
      2) Supply temperature.
      3) Return temperature.
   c. Alarms and a heat pump shutdown signal shall be generated upon any of the following loop water conditions:
      1) No Loop Flow.
      2) High Loop Water Supply Temp Shutdown: If the loop water supply temperature is greater than 92°F (adj.).
      3) Low Loop Water Supply Temp Shutdown: If the loop water supply temperature is less than 58°F (adj.).
   d. Alarms shall be provided as follows:
      1) High Loop Water Supply Temp: If the loop water supply temperature is greater than 90°F (adj.).
      2) Low Loop Water Supply Temp: If the loop water supply temperature is less than 60°F (adj.).

2. Loop Water Pump Lead/Standby Operation:
   a. The two loop water pumps shall operate in a lead/standby fashion.
      1) The lead pump shall run first.
      2) On failure of the lead pump, the standby pump shall run and the lead pump shall turn off.
   b. The designated lead pump shall rotate upon one of the following conditions (user selectable):
      1) manually through a software switch
      2) weekly
   c. Alarms shall be provided as follows:
      1) Loop Water Pump 1
         a) Failure: Commanded on, but the status is off.
         b) Running in Hand: Commanded off, but the status is on.

2) Loop Water Pump 2
   a) Failure: Commanded on, but the status is off.
   b) Running in Hand: Commanded off, but the status is on.

P. Loop Cooling (typical of 1)
1. Water Source Heat Pump Cooling Tower System - Run Conditions:
   a. The cooling tower system shall be enabled to run whenever:
      1) The loop control is enabled by zone requirements.
2. Closed System Cooling Tower Loop Water Temperature Control:
   a. The controller shall measure the loop water supply temperature and stage the damper, spray pump and fans on in sequence to maintain setpoints. The following setpoints are recommended values. All setpoints shall be field adjusted during the commissioning period to meet the requirements of actual field conditions.
   b. On rising loop water supply temperature, the damper, pump and fan speeds shall stage on at the setpoints given below. When the loop water supply temperature drops back below the setpoints by the differentials listed, the fan speeds, pump and damper shall stage off. To prevent short cycling and back-emf in the fan motors, there shall be a minimum delay (adj.) between each stage.

	Tower Damper	Spray Pump	Low Speed Fan	High Speed Fan
Stage ON: If loop temp rises above setpoint of:	80°F	83°F	85°F	88°F
Stage OFF: If loop temp drops below setpoint by:	4°F	5°F	5°F	5°F

   c. Alarms shall be provided as follows:
      1) Damper
         a) Failure: Commanded open, but the status indicates closed.
         b) Open in Hand: Commanded closed, but the status indicates open.
      2) Spray Pump
         a) Failure: Commanded on, but the status is off.
         b) Running in Hand: Commanded off, but the status is on.
      3) Fan Low Speed
         a) Failure: Commanded on, but the status is off.
         b) in Hand: Commanded off, but the status is on.
      4) Fan High Speed
         a) Failure: Commanded on, but the status is off.
         b) in Hand: Commanded off, but the status is on
      5) High Condenser Water Supply Temp: If the condenser water supply temperature is greater than 90°F (adj.).

Q. Loop Heating (typical of 1)
1. Water Source Heat Pump Boiler System - Run Conditions:
   a. The boiler system shall run subject to its own internal safeties and controls. The boiler system shall be enabled to run whenever:
      1. The loop control is enabled by zone requirements.
      2. AND outside air temperature is less than ***the unoccupied/ occupied reset schedule.***

b. The boiler system shall also run for freeze protection whenever outside air temperature is less than 38°F (adj.).

2. Two Stage Boiler Loop Water Temperature Control:
   a. The controller shall measure the loop water supply temperature and stage the boiler, its circulation pump and heating stages on in sequence to maintain setpoints. The boiler system shall run subject to its own internal safeties and controls.
   b. On dropping loop water supply temperature, the boiler and its circulation pump shall stage on at the setpoints given below. When the loop water supply temperature rises back above the setpoints by the differentials listed, the boiler shall then stage off. To prevent short cycling, there shall be a user definable (adj.) delay between stages, and each stage shall have a user definable (adj.) minimum runtime.
   c. The following setpoints are recommended values. All setpoints shall be field adjusted during the commissioning period to meet the requirements of actual field conditions.
   d. The boiler and circulation pump shall stage to maintain setpoints as follows:

	Boiler & Pump	Stage 1	Stage 2
Stage ON: If loop temp drops below setpoint of:	70°F	68°F	66°F
Stage OFF: If loop temp rises above setpoint by:	4°F	4°F	4°F

   e. Alarms shall be provided as follows:
      1) Boiler
         a) Failure: Commanded on, but the status is off.
         b) Running in Hand: Commanded off, but the status is on.
      2) Low Boiler Supply Temp: If the boiler supply temperature is less than 120°F (adj.).

R. Makeup Air Unit - Supply Air Temp (typical of 1)
   1. Run Conditions - Interlocked:
      a. The unit MAU --- shall be interlocked to run whenever Air Handling Unit ---- runs unless shutdown on safeties.
   2. Freeze Protection:
      a. The unit shall shut down and generate an alarm upon receiving a freezestat status.
   3. Outside Air Damper:
      a. The outside air damper shall open anytime the unit runs and shall close anytime the unit stops. The supply fan shall start only after the damper status has proven the damper is open. The outside air damper shall close 4sec (adj.) after the supply fan stops.
      b. Alarms shall be provided as follows:
         1) Outside Air Damper Failure: Commanded open, but the status is closed.
         2) Outside Air Damper in Hand: Commanded closed, but the status is open.

4. Heat Recovery Wheel - Constant Speed:
   a. The controller shall run the heat wheel for energy recovery as follows.
      1) Cooling Recovery Mode: The controller shall measure the heat wheel discharge air temperature and run the heat wheel to maintain a setpoint 2°F (adj.) less than the unit supply air temperature setpoint. The heat wheel shall run for cool recovery whenever:
         a) The unit return air temperature is 5°F (adj.) or more below the outside air temperature.
         b) AND the unit is in a cooling mode.
         c) AND the supply fan is on.
      2) Heating Recovery Mode: The controller shall measure the heat wheel discharge air temperature and run the wheel to maintain a setpoint 2°F (adj.) greater than the unit supply air temperature setpoint. The heat wheel shall run for heat recovery whenever:
         a) Unit return air temperature is 5°F (adj.) or more above the outside air temperature.
         b) AND the unit is in a heating mode.
         c) AND the supply fan is on.
   b. Periodic Self-Cleaning:
      1) The heat wheel shall run for 10sec (adj.) every 4hrs (adj.) the unit runs.
   c. Frost Protection:
      1) The heat wheel shall run for 10sec (adj.) every 600sec (adj.) whenever:
         a) Outside air temperature drops below 15°F (adj.)
         b) OR whenever exhaust air temperature drops below 20°F (adj.).
   d. The bypass dampers will open whenever the heat wheel is disabled.
   e. Alarms shall be provided as follows:
      1) Heat Wheel Rotation Failure: Commanded on, but the status is off.
      2) Heat Wheel in Hand: Commanded off, but the status is on.
5. Supply Fan:
   a. The supply fan shall run anytime the unit is commanded to run. To prevent short cycling, the supply fan shall have a user definable (adj.) minimum runtime, unless shutdown on safeties.
   b. Alarms shall be provided as follows:
      1) Supply Fan Failure: Commanded on, but the status is off.
      2) Supply Fan in Hand: Commanded off, but the status is on.
6. Supply Air Temperature Setpoint - Fixed:
   a. The controller shall monitor the supply air temperature and shall maintain a fixed supply air temperature setpoint of 55°F (adj.) cooling, 70 °F (adj.) heating.
7. Cooling Coil Valve:
   a. The controller shall measure the supply air temperature and modulate the cooling coil valve to maintain its cooling setpoint.
   b. The cooling shall be enabled whenever:

1) Outside air temperature is greater than ***the unoccupied/ occupied reset schedule.***
2) AND the supply air temperature is above cooling setpoint.

3) AND the fan status is on.

c. The cooling coil valve shall open to 50% (adj.) whenever the freezestat is on.

8. Heating Coil Valve:
   a. The controller shall measure the supply air temperature and modulate the heating coil valve to maintain its heating setpoint.
   b. The heating shall be enabled whenever:
      1) Outside air temperature is less than ***the unoccupied/ occupied reset schedule.***
      2) AND the supply air temperature is below heating setpoint.
      3) AND the fan status is on.
   c. The heating coil valve shall open to 100% (adj.) whenever the freezestat is on.
9. Prefilter Status:
   a. The controller shall monitor the prefilter status.
   b. Alarms shall be provided as follows:
      1) Prefilter Change Required: Prefilter differential pressure exceeds a user definable limit (adj.).
10. Final Filter Status:
   a. The controller shall monitor the final filter status.
   b. Alarms shall be provided as follows:
      1) Final Filter Change Required: Final filter differential pressure exceeds a user definable limit (adj.).
11. Supply Air Temperature:
   a. The controller shall monitor the supply air temperature.
   b. Alarms shall be provided as follows:
      1) High Supply Air Temp: If the supply air temperature is greater than 120°F (adj.).
      2) Low Supply Air Temp: If the supply air temperature is less than 45°F (adj.).

END OF SECTION

SECTION 231101

LIQUID PETROLEUM GAS PIPING

GENERAL GUIDELINES

1.1 SECTION INCLUDES

A. Qualitative requirements for interior LP gas piping, exterior LP gas piping, gas valves, gas regulators, LP gas tanks, and vaporizers.

1.2 SUBMITTALS

A. Submittals are required and shall include product data noting materials, sizes, performance ratings, and installation instructions.

1.3 QUALITY ASSURANCE

A. Material and installation requirements shall follow NFPA 58, state and local gas company codes.

B. Material and installation requirements shall follow OBC-Plumbing Code 4101:2-67 and 4101:8-1 thru 19 of the Ohio Pressure Piping Systems Rules.

C. Conformance to National Fuel Gas Code.

1.4 GAS PIPING

A. Interior gas piping shall be schedule 40 black steel piping.

B. Exterior gas piping shall be schedule 40 black steel piping with bituminous coating. Provide grounding anode(s). Review type of piping and depth of bury with local L.P. tank company.

C. Option to 2.01,A: Gas piping for ½ to 2 inch shall be corrugated stainless steel tubing. Covering must meet ASTM 84 (25/50) requirements and ANSI/AGA LCI B2005.

D. Copper tubing must meet ASTM B88 and NFPA 58.

E. Copper press fittings may be used as an option to wrought copper fittings. Fitting must be specifically made for natural gas and LP gas.

1.5 GAS VALVES

A. Gas valves 2 inches and smaller shall be full port all brass screwed gas service stops with lever handles and check.

B. Gas valves 2-1/2 inches and larger shall be semi-steel, straightway flanged, 125 lbs. swp, square head wrench operated, lubricated plug valve.

C. Kitchen Hood – Spring loaded (N.C.) gas valve.

D. In the science and art rooms, provide the following:
   1. A manual reset, solenoid operated shut-off valve with 120v operation with remote push button operation and fire alarm system activation.

1.6 GAS REGULATORS

A. Gas regulators shall limit the pressure of gas from the inlet to the outlet feeding a gas appliance.

1.7 LP GAS TANK

A. Tank shall be supplied by the local LP gas company, sized to match the gas usage of the school.

1.8 LP GAS VAPORIZER

A. Provide vaporizer for delivery of gas to the building if a liquid LP source is used, sized for the total building load.

1.9 INSTALLATION

A. Unions and valves are not permitted in the gas piping in a return air plenum.

B. Piping 1-1/2 inch and smaller shall have threaded joints.

C. Piping 2 inches and larger shall have welded joints.

D. All regulators shall be separately vented full size to the exterior, with a turndown elbow and insect screen. Vent outlet shall not terminate next to a combustion or fresh air intake.

E. Provide a valve, union and dirt leg at each appliance. Lubricate all valves before putting the valves into service.

F. Provide 1/2 inch elastomeric insulation around all piping through walls and floors.

G. Test all piping for 24 hours at 100 psi.

H. All interior piping shall be exposed. Exposed piping shall not be located where students could hang from the piping.

I. All exterior gas piping shall be buried a minimum of 30 inches.

J. Provide 6 foot high fence around tank(s).

K. Provide regulator on exterior wall of building, connected to the interior piping. Provide inlet and outlet shutoff valve.

L. Provide vaporizer within LP tank fence.

M. Science room auto shut-off valves can be located in teacher's demo unit, under sink, or exposed in storage room.

END OF SECTION

SECTION 232113

HVAC PIPING SPECIALITIES

GENERAL GUIDELINES

1.1 SECTION INCLUDES

A. Qualitative requirements for piping expansion joints and piping guides, pressure reducing valves, ASME safety relief valves, manual and automatic air vents, ASME compression and expansion tanks, air separators with automatic air vent, and strainers.

1.2 SUBMITTALS

A. Submittals are required and shall include product data noting materials, sizes, and dimensions.

1.3 QUALITY ASSURANCE

A. Pressure piping shall meet ASME B31.9 Code.

B. Safety relief valve requirements shall meet ASME Boiler and Pressure Vessel Code.

1.4 COMPONENTS

A. Expansion Joint: Housed stainless steel bellows type. Provide with piping expansion guides.

B. Pressure-Reducing Valves. Bronze or cast iron body with inlet strainer and noncorrosive valve seat and stem. Preset at 12 psig (adjustable).

C. ASME Safety-Relief Valves: Brass or bronze body with brass and rubber wetted internal working parts. Size for the pressure and capacity of the system.

D. Manual Air Vents: Provide 1/2 inch diameter piping loop with ball valve and standard hose end connection.

E. Automatic Air Vents: High capacity with float operation. Constructed of cast iron body with stainless steel, brass and EPDM internal parts. Rated for 250 degrees F at 150 psig. Unit shall be designed not to allow air into the vent in ***case*** of system pressure dropping below atmospheric pressure. Use for relieving air from the system at the air separator only.

F. ASME expansion tanks with air-control tanks fittings, gauge glass and tank drain fittings.

G. ASME diaphragm-type compression tanks.

H. Air separators with high capacity automatic air vent.

I. Y-Pattern Strainers: 125 psig working pressure cast iron or bronze body ASTM A126 Class B.

J. Duplex basket strainers for open condenser water systems. Cast iron body with stainless steel basket strainer. Provide with isolation valves for cleaning each strainer while remaining in service.

K. Corrosion coupons with associated holders in piping.

1.5 INSTALLATION

A. Provide piping expansion joints with piping control guides to control the expansion of the heating water piping systems where piping expansion loops cannot be used because of space restrictions.

B. Provide pressure reducing valves at the domestic cold water make-up connection to the closed loop heating water, chilled water piping systems, and heat pump.

C. Provide ASME safety relief valve in all closed hydronic loop systems. Relief valves shall be sized for the proper relief capacity to protect each system.

D. Provide manual air vent valves at all coils and at the high points of each system.

E. Provide automatic air vent valves on the air separator for each system. Pipe this air relief discharge to the nearest floor drain.

F. Provide either an ASME compression tank or an ASME bladder type expansion tank for each closed loop system.

G. Provide a full size (same size as the main piping system) centrifugal air separator on the suction side of the closed loop pumping system. The capacity shall meet or exceed the flow requirements of the system.

H. Provide basket strainer for all open loop condenser water systems.

I. Provide corrosion coupons and holders for all open loop condenser water systems.

J. Provide Y-pattern strainer at all coils including VAV reheat coils at inlet side of control valve and automatic flow controller.

END OF SECTION

SECTION 232117

GLYCOL HEAT TRANSFER FLUID

GENERAL GUIDELINES

1.1 SECTION INCLUDES

A. Qualitative requirements for pre-mixed [ethylene] [propylene] glycol solution for the closed loop heating water systems and chilled water systems.

1.2 SUBMITTALS

A. Submittals are required and shall include product data, system capacity adjustments, MSDS sheets, and requirements for installation.

1.3 QUALITY ASSURANCE

A. Chemical shall meet all state and local pollution control regulations.

B. Heat transfer solution shall be inhibited and specifically for use in commercial HVAC systems.

C. System shall have a minimum 8 inch by 10 inch metal system nameplate denoting the following:

1. Date of original HTF charge.
2. Description of heat transfer fluid.
3. Manufacturer's name, address, and telephone.
4. Percent ***glycol.***
5. Freeze point and burst point.
6. Total system gallons.
7. Reference to material safety sheet.
8. Instruction for sampling of fluid.
9. Month for annual sampling.
10. Mailing instructions.

1.4 ETHYLENE GLYCOL-BASED PRODUCT

A. Inhibited ethylene glycol containing inhibitors, buffers, and anti-foaming agents.

B. Minimum 25 percent solution of heat transfer fluid and deionized water.

1.5 PROPYLENE GLYCOL-BASED PRODUCT

A. Inhibited propylene glycol containing inhibitors, buffers, and anti-foaming agents.

B. Minimum 30 percent solution of heat transfer fluid and deionized water. A 20 percent solution shall be acceptable in geothermal, ground-coupled systems where required for protection of equipment - not for freeze (burst) protection for exterior piping.

1.6 INSTALLATION

A. Install fluid on suction side of system pump.

1.7 HYDRONIC SYSTEMS FLUSHING

A. Hydronic systems shall be throughly flushed with approved pre-cleaning agent prior to being placed into service.

END OF SECTION

SECTION 232119

HVAC FLOW CONTROL

GENERAL GUIDELINES

1.1 SECTION INCLUDES

A. Qualitative requirements for calibrated plug valves for manual system flow balancing and automatic flow balancing valves.

1.2 SUBMITTALS

A. Submittals are required and shall include product data noting materials, sizes, and dimensions.

1.3 COMPONENTS

A. Calibrated plug valves
1. 125 psig maximum working pressure 250 degrees Fahrenheit maximum operating temperature, bronze construction with calibrated orifice. Provide with pressure temperature taps. Two inches diameter and smaller shall have threaded connections. Two and one-half inches diameter and larger shall be flanged connections.

B. Automatic flow balancing valves:
1. 150 psig maximum working pressure, 250 degrees F maximum operating temperature. Brass or bronze housing for one and one-half inches diameter piping size and smaller and cast iron for two inches diameter and larger piping size with all stainless steel operating parts. Flow shall be controlled to plus or minus 5 percent of the required flow. Provide with threaded connections for two inches diameter and smaller. Provide flanged or grooved connections for two inches diameter and larger. Provide with pressure temperature taps on each side of the flow control cartridge. Provide the proper pressure control range for the system.

1.4 INSTALLATION

A. Provide (calibrated manual) (automatic) flow control valves at each coil, heat pump, boiler or each chiller of a multiple chiller installation to properly balance the flow to each device.

END OF SECTION

SECTION 232123

HVAC HYDRONIC PUMPS

GENERAL GUIDELINES

1.1 SECTION INCLUDES

A. Qualitative requirements for in-line circulators, vertical in-line pumps, base-mount end-suction pumps, close-coupled end-suction pumps, coil circulating pumps, and double-suction, vertical split-case pumps.

1.2 SYSTEM DESCRIPTION

A. Impellers shall be sized for a maximum diameter not to exceed 85 percent of the selected pump's largest diameter.

B. Each pump shall be selected for non-overloading operation throughout its curve.

C. Each pump shall be provided with high efficiency motors.

D. All three-phase motors shall be protected with phase loss protection. Protection shall be provided by the electrical system, by built-in protection, or by protection built into a variable frequency drive.

1.3 SUBMITTALS

A. Submittals are required and shall include pump performance curves.

1.4 HORIZONTAL IN-LINE CIRCULATORS

A. Each pump will be horizontal, centrifugal, single stage, design with cast iron casings and bronze impellers.

B. Mechanical seals.

C. Resiliently mounted motor.

1.5 VERTICAL IN-LINE PUMPS

A. Each pump will be vertical, centrifugal, single stage, design with cast iron casings and bronze impellers.

B. Mechanical seals.

C. Direct-mounted motor with lifting and supporting lugs.

1.6 BASE-MOUNT END-SUCTION PUMPS

A. Each pump will be single stage, base-mounted, end-suction design with cast iron casing, cast-bronze impeller, and bronze fitted construction.

B. Mechanical seals.

C. The pump and motor shall be mounted on a common baseplate of heavy structural steel.

1.7 CLOSE-COUPLED END SUCTION PUMPS

A. Each pump shall be closed-coupled, single-stage, end suction design with cast iron casing, cast-bronze impeller, and bronze-fitted construction.

B. Mechanical seals.

C. Direct-mounted motor.

1.8 COIL CIRCULATING PUMPS

A. Each pump will be horizontal, centrifugal, single stage, design with cast iron casings and nonmetallic impellers.

B. Mechanical seals.

C. Resiliently mounted motor.

1.9 DOUBLE-SUCTION, VERTICAL SPLIT-CASE PUMPS

A. Each pump will be single stage, double-suction, vertical split case design with cast iron casing, bronze impeller, and bronze fitted construction.

B. Mechanical seals.

C. The pump and motor shall be mounted on a common baseplate of heavy structural steel.

1.10 INSTALLATION

A. Install all pumps in accordance with manufacturer's requirements.

B. Base mounted pumps shall be mounted on a concrete housekeeping pad. In-line pumps shall be supported from the structure or floor. Pumps may be provided as part of a packaged pumping system. Base mounted pumps shall be set on concrete inertia base when provided as part of packaged pumping systems.

END OF SECTION

SECTION 232300

REFRIGERANT PIPING

GENERAL GUIDELINES

1.1 SECTION INCLUDES

A. Qualitative requirements for refrigerant piping and accessories.

1.2 SUBMITTALS

A. Submittals are required and shall include product data noting capacities at the specified conditions, materials, sizes, and dimensions.

1.3 QUALITY ASSURANCE

A. ASME B31.5 Refrigeration Piping latest edition.

B. UL 207 Refrigerant Containing Components and Accessories.

1.4 COMPONENTS

A. Piping: Type ACR hard copper tubing with wrought copper fittings and brazed joints.

B. Valves
1. Packed angle valve.
2. Solenoid valve.
3. Refrigerant check valve.
4. Thermal expansion valve.
5. Pressure relief valve.
6. Pressure regulating valve.
7. Hot gas bypass valve.
8. Suction accumulator.

C. Moisture indicators.

D. Replaceable type filter/dryer assemblies with three valve by-pass.

E. Flexible piping connectors.

1.5 INSTALLATION

A. Provide filter/dryer assemblies, moisture indicators, thermal expansion valve and solenoid valves for each refrigeration circuit.

B. Pressure test refrigerant piping system at 300 psi for high side and 150 psi for low side. Maintain pressure for a minimum of 24 hours.

C. Leak test piping and joints with an electronic or halide leak detector.

D. Evacuate entire system with an approved high vacuum pump system to 500 microns.

END OF SECTION

SECTION 232500

HVAC WATER TREATMENT

GENERAL GUIDELINES

1.1 SECTION INCLUDES

A. Qualitative requirements for closed water treatment system for heating hot water, chilled water, geothermal, and heat pump condenser water systems.

B. Qualitative requirements for open water treatment system for cooling tower condenser water systems.

1.2 SUBMITTALS

A. Submittals are required and shall include product data noting catalog data, specification data, dimensional and operational data, wiring requirements with diagram, chemical specification data, and warranty data.

1.3 QUALITY ASSURANCE

A. Chemical shall meet all state and local pollution control regulations.

B. Water chemistry and makeup must meet the installed equipment's operational and warranty requirements.

1.4 WARRANTY

A. Provide a 1 year ***service program including testing and required materials and maintenance.***

1. Chemical feed systems shall include all chemicals and additives.

B. Filter media is to be provided as necessary to maintain the required water quality over the installation, start-up, and ***warranty*** periods.

1.5 Applicable System Types

A. Closed Water Treatment Systems

1. Manual bypass chemical feeder.

2. Automatic glycol feeder pump.

B. Open Water Treatment Systems

1. Automatic chemical injection system.

2. Chemical-free Magnetic Field with alternating and reversing polarity field orientation.

3. Chemical-free Pulsed Electric Field.

4. Chemical-free Hydrodynamic Cavitation.

C. Open systems employing a chemical-free water treatment system shall also include a side stream filter and manual bypass chemical feeder for use with initial flushing, cleaning and cooling tower passivation. Bypass feeder shall also be utilized for additional biocide treatment if required by evidence of sampling and testing.

1.6 Performance Requirements

A. Water quality for HVAC systems shall minimize corrosion, scale buildup, and biological growth for optimum efficiency of HVAC equipment without creating a hazard to operating personnel or the environment.

B. Closed Hydronic Systems shall maintain the following water qualities:
1. pH: Maintain a value within 9.0 to 10.5 .
2. "P" Alkalinity: Maintain a value within 100 to 500 ppm.
3. Conductivity: Maintain a value within 300 to 5,000 S/cm.
4. ***Deleted***
5. Free Caustic Alkalinity: Maintain a maximum value of 20 ppm.
6. Microbiological Limits:
   a. Total Aerobic Plate Count: Maintain a maximum value of 1000 CFU's/ml.
   b. Total Anaerobic Plate Count: Maintain a maximum value of 100 CFU's/ml.
   c. Iron Bacteria: Maintain a maximum value of 0 CFU's/ml.

C. Open Hydronic Systems shall maintain the following water qualities:
1. pH: Maintain a value within 7.2 to 9.4 .
2. "P" Alkalinity: Maintain a maximum value of 100 ppm.
3. Conductivity: Maintain a value within 300 to 5,000 S/cm.
4. Chemical Oxygen Demand: Maintain a maximum value of 100 ppm.
5. ***Deleted***
6. Free "OH" Alkalinity: Maintain a maximum value of 0 ppm
7. Microbiological Limits:
   a. Total Aerobic Plate Count: Maintain a maximum value of 10,000 CFU's/ml.
   b. Total Anaerobic Plate Count: Maintain a maximum value of 1000 CFU's/ml.
   c. Iron Bacteria: Maintain a maximum value of 0 CFU's/ml.
8. Polymer Testable: Maintain a minimum value within 10 to 40.

D. Passivation for Galvanized Steel: For the first 60 days of operation.
1. pH: Maintain a value within 7 to 8 .
2. Calcium Carbonate Hardness: Maintain a value within 100 to 300 ppm.
3. Calcium Carbonate Alkalinity: Maintain a value within 100 to 300 ppm.

1.7 SYSTEM COMPONENTS

A. Side Stream Filters and Chemical Feeder: Cast iron or steel, [2 gallon][5 gallon][10 gallon] capacity, 300 psi at 200 degrees F, support legs, 20 micron filter, epoxy-coated, drain valve, spare filter, and spare lid gasket.

B. Conductivity Probe: Provide complete with probe and flow switch and dual flat switch surface carbon elements. Maximum pressure shall not exceed 150 psi and maximum temperature shall not exceed 140 degrees F.

C. Positive-displacement [diaphragm] [piston] pumps: Provide with ball type check valves, foot valves, and injection fittings.

D. Chemical Solution Tanks: [30 gallon] [50 gallon].

E. Packaged conductivity controller: Electronic operation with bleed and feed relays, feed timer, and digital display for control setting and adjustments.

F. Cold-water meter: Provide complete with contacting register sized to meter twice the volume of maximum makeup water rate for system.

G. Solenoid valves: Provide and wire as required.

H. Electronic timers: Provide a biocide control timer and lockout control timer.

I. Condenser water treatment control panel: Provide enclosed in a NEMA 4X, IP-65 rated enclosure with hinged lockable cover.

J. ***Water*** treatment test equipment
   1. Water test kit with spare reagents.
   2. Conductivity meter that compensates for differences in temperatures and analog meter.
   3. Corrosion test coupon assembly (open systems)

K. Chemicals
   1. Provide a minimum of 1 years supply.
   2. Include all MSDS sheets for chemicals provided.

L. Pre-cleaning and flushing materials: Provide chemicals produced specifically for use in cleaning piping systems after installation and prior to being placed into operation.

1.8 INSTALLATION

A. Install side stream filter and chemical feeder with 2 valve bypass and drain.

B. Install make-up water meter with 3-valve bypass, strainer, and unions.

C. Mount conductivity monitor, chemical feed pumps, and biocide timer on 304 stainless steel shelf.

D. Hydronic systems shall not be operated for any reason prior to complete flushing and charging with appropriate chemicals.

1.9 HYDRONIC SYSTEMS FLUSHING AND PRE-CLEANING

A. The following procedures is for flushing and pre-cleaning
   1. Determine the metallurgy of the system
   2. By-pass all HVAC equipment
   3. Determine the exact system volume. This may be accomplished by filling the system through a water meter or salt test.
   4. With all areas open to flow, add system cleaner through the By-Pass Filter Feeder or pump per manufacturer's recommendations.
   5. Cleaning and flush rates must be at a minimum of 6 ft/sec through the piping or maximum flow rate of the system.
   6. First flush the system to remove as much suspended material as possible with clear water.
   7. Second, cleaning shall maintain total alkalinity of 3000 ppm for twenty-four (24) to thirty-six (36) hours.
   8. Third, flush system until pH and Alkalinity return to make-up water levels and drain.

9. Fourth, fill system with OSDM-compliant clean water with a water chemistry (pH, alkalinity, etc.) and make-up that meets equipment water quality requirements.
   a. If the system is drained of water and a heat transfer solution added, a quality corrosion inhibitor shall be added to the system to protect against flash rust while the system is drained. Please consult your water treatment professional for recommendations.

10. Simply draining the loop and refilling with fresh water is not permitted. The loop needs to be flushed by adding fresh water and draining dirty water continuously. This procedure will help prevent foulants from dropping out on the pipe surfaces.

B. ADDITIONAL PROCEDURE FOR GEOTHERMAL SYSTEM FLUSHING AND CLEANING

1. It is imperative that the geothermal piping is sealed and capped during installation to keep debris out. Geothermal systems must be flushed after each stage of the installation.

2. Vertical well piping shall be flushed with high pressure water once they are installed and grouted to remove any debris in the pipe. Piping shall be recapped to prevent sand and dirt from entering the piping before they are connected to the header.

3. Main horizontal header shall be flushed with high pressure water once they are installed to remove any debris in the piping. Piping shall be recapped to prevent sand and dirt from entering the piping until they are connected to the vertical well piping.

4. The entire geothermal piping system shall be cleaned and flushed as indicated above in item A.

5. Architect, Engineer or CM shall signoff on pipe cleaning before system can be started.

1.10 WATER SERVICE PROGRAM

A. The ***water*** treatment contractor shall provide ***maintenance*** and consulting services for 1 year from date of acceptance of system by the Owner. Minimum service requirements shall include:

1. ***Monthly*** sample and testing
2. Additional chemical if needed
3. Side stream filter change
4. Testing of: PH, alkalinity, conductance, inhibitor, microbiological dip slide, and % glycol
5. Visual check of system
6. Written report documenting all of the items above.

1.11 TRAINING

A. Provide training for Owner's maintenance staff on testing of water samples.

END OF SECTION

THIS PAGE HAS BEEN INTENTIONALLY LEFT BLANK.

SECTION 233113

LOW-PRESSURE DUCTWORK

GENERAL GUIDELINES

1.1 SECTION INCLUDES

A. Qualitative requirements for low pressure supply (***3-inch wg and below*** pressure class) sheetmetal ductwork; and low pressure return, relief and exhaust (2-inch wg pressure class negative) sheetmetal ductwork.

C. Qualitative requirements for duct insulation liner. Application shall be limited; external wrapped insulation is preferred.

1.2 SUBMITTALS

A. Submittals are required and shall include 1/4 inch scale layout shop drawings showing duct location sizes, elevations and air flow quantities for each air terminal device. Electronic drawing files of floor plans and structural plans are available from the Architect/Engineer upon request.

1.3 QUALITY ASSURANCE

A. SMACNA HVAC Duct Construction Standards-Metal and Flexible.

B. UL181.

C. NAIMA AH124-94: Fibrous Glass Duct Liner Standard.

D. NFPA 90A and 90B.

E. ASHRAE Handbook, HVAC Systems and Equipment.

F. ***Ductwork shall be sealed as required*** by ASHRAE Standard 90.1.

1.4 COMPONENTS

A. Supply air, return air, relief air and exhaust air (except shower rooms, kitchen exhaust hoods, dishwasher exhaust and fume hood exhaust) shall be galvanized steel lock-forming quality ASTM A 653/A 653/M, G90 (Z275) coating designation; milli-phosphatized finish for surfaces of ducts exposed to view. Gauges shall be per the latest issue of SMACNA for listed pressure requirements.

1. Provide Class B seals for all joints.
2. Bolted-flange style duct connections shall be acceptable.

B. Fume hood exhaust shall be Type 304 stainless steel or PVC -coated galvanized steel lock forming quality meeting UL 181, ASTM A 653/A 653/M, G90 (Z275) coating designation. Provide 4-mil PVC coating on the interior of the duct and fittings. Gauges shall be per the latest issue of SMACNA for listed pressure requirements.

1. Provide Class A seals for all joints.

C. Shower exhaust ductwork shall be aluminum construction conforming to ASTM B 209 Alloy 3003, Temper H14, Gauges shall be per the latest issue of SMACNA for listed pressure requirements. Seal all joints liquid-tight. Pitch ductwork back toward grille.

D. Kitchen exhaust hood exhaust ductwork shall be 16 gauge steel with weld joints as required by the Ohio Basic Mechanical Code. All joints shall be welded liquid tight.

E. Dishwasher exhaust ductwork shall be 16 gauge type 304 stainless steel with liquid tight welded joints all the way to the fan. Pitch ductwork back toward dishwasher.

F. Flexible duct liner shall be a minimum of 1 inch thick and shall be applied in accordance with the latest addition of the SMACNA's Duct Liner Application Standard. All dimension shown on the plans are inside duct dimension and do not include the dimension of the duct liner.

END OF SECTION

SECTION 233115

MEDIUM-PRESSURE DUCTWORK

GENERAL GUIDELINES

1.1 SECTION INCLUDES

A. Qualitative requirements for medium-pressure round or flat oval supply ***(4-inch wg and higher pressure class, including all ductwork in VAV systems between the air handling units and VAV terminals).***

1.2 SUBMITTALS

A. Submittals are required and shall include 1/4 inch scale layout shop drawings showing duct location sizes, elevations and air flow quantities for each air terminal device. Electronic drawing files of floor plans and structural plans are available from the Architect/Engineer upon request.

1.3 QUALITY ASSURANCE

A. SMACNA HVAC Duct Construction Standards-Metal and Flexible.

B. UL181.

C. NFPA 90A and 90B.

D. ASHRAE Handbook, HVAC Systems and Equipment.

E. Ductwork shall be sealed and leak tested as required by ASHRAE Standard 90.1.

1.4 COMPONENTS

A. Supply air shall be spiral seam round or flat oval duct work constructed of galvanized steel lock-forming quality ASTM A 653/A 653/M, G90 (Z275) coating designation; milli-phosphatized finish for surfaces of ducts exposed to view. Gauges shall be per the latest issue of SMACNA for listed pressure requirements.

B. Minimum round duct sheet metal gauge shall be as follows:

Duct Diameter	Spiral Seam Gauge	Longitudinal Seam Gauge
3 through 14 inches	26	24
15 through 26 inches	24	22
27 through 36 inches	22	20
37 through 50 inches	20	20
51 through 60 inches	18	18
61 through 84 inches	18	16

C. Minimum flat oval duct gauges shall be as follows:

Major Dimension Duct Width	Spiral Seam Gauge	Longitudinal Seam Gauge
Up through 24 inches	24	20
25 through 36 inches	22	20
37 through 48 inches	22	18
49 through 60 inches	20	18
61 through 70 inches	20	16
70 inches and up	18	16

D. Fittings for duct construction shall be of sheet metal gauges as follows:

Duct Diameter/ Major Dimension	Round Fittings	Flat Oval Fittings
3 through 14 inches	24	20
15 through 26 inches	22	20
27 through 36 inches	20	20
37 through 50 inches	20	18
51 through 60 inches	18	18
61 through 84 inches	16	16

E. Provide with Class A seals for all duct joints.

END OF SECTION

SECTION 233117

FLEXIBLE DUCTWORK

GENERAL GUIDELINES

1.1 SECTION INCLUDES
- A. Qualitative requirements for flexible insulated HVAC ductwork and flexible ductwork joint connections.

1.2 SUBMITTALS
- A. Submittals are required and shall include material pressure ratings and dimensions.

1.3 QUALITY ASSURANCE
- A. SMACNA HVAC Duct Construction Standards-Metal and Flexible.
- B. UL181 .
- C. NFPA 90A and 90B.
- D. ASHRAE Handbook, HVAC Systems and Equipment.
- E. UL 191.
- F. ***Ductwork shall be sealed as required*** by ASHRAE Standard 90.1.

1.4 COMPONENTS
- A. Low Pressure Flexible Duct
  1. Inner Core: Reinforced 3-ply aluminum foil with mechanically lock helix.
  2. Outer Covering: 1 inch thick, 3/4 pound density fiberglass with fire retardant jacket.
  3. Pressure Rating: 5 inches positive or negative.
- B. High Pressure Flexible Duct
  1. Inner Core: All metal, bend 3-ply laminated aluminum.
  2. Outer Covering: 1 inch thick, 3/4 pound density fiberglass with fire retardant jacket.
  3. Pressure Rating: 10 inch positive.
- C. Flexible Joints
  1. Minimum 30 ounce neoprene coated fabric secured by bolted angles or band iron.
  2. Metal to metal contact shall not be permitted.

1.5 INSTALLATION
- A. Provide the flexible connections at ductwork connections to vibrating or rotating equipment, including fans.

END OF SECTION

SECTION 233300

DUCTWORK ACCESSORIES

GENERAL GUIDELINES

1.1 SECTION INCLUDES

A. Qualitative requirements for backdraft dampers, manual volume dampers, fire dampers, smoke dampers, duct silencers, turning vanes and duct access doors.

1.2 SUBMITTALS

A. Submittals are required and shall include material, sizes, quantities, and dimensions.

1.3 QUALITY ASSURANCE

A. SMACNA HVAC Duct Construction Standards-Metal and Flexible.

B. UL181 .

C. NFPA 90A and 90B.

D. ASHRAE Handbook, HVAC Systems and Equipment.

E. Dampers shall meet the requirements of ASHRAE Standard 90.1.

1.4 COMPONENTS

A. Backdraft Dampers
1. Frames: Galvanized steel.
2. Blades: Extruded aluminum.
3. Blade Seals: Neoprene.
4. Blade Axles: Galvanized steel.
5. Tie Bars and Brackets: Aluminum.
6. Return Spring: Adjustable tension for motor operated dampers only.
7. Dampers: Counter-balanced for building pressure activation.

B. Manual Volume Dampers
1. Frames: Galvanized steel.
2. Blades: Galvanized steel or Extruded aluminum.
3. Tie Bars and Brackets: Galvanized steel.
4. Blade Seals: Neoprene.
5. Dampers: Multiple, opposed blade design with linkage outside airstream.

C. Fire Dampers
1. UL listed and labeled for 1-1/2 hour or 3 hour.
2. Frame: Galvanized steel.
3. Blades: Mounted out of airstream.
4. Fusible Link: Replaceable 165 degrees F.

D. Smoke Dampers
   1. Actuators: Two-position with spring-return motors.

E. Duct Silencers: Factory-fabricated and -tested, 25/50 flame-spread/smoke-developed rating, with performance ratings determined by ASTM E 477.
   1. Fill Material: fiberglass.

F. Turning Vanes
   1. Installer fabricated or manufactured.

G. Duct-Mounted Access Panels and Doors
   1. Frame: Galvanized steel
   2. Door: Double wall galvanized steel with 1 inch insulation fill and neoprene seal.
   3. Access panels shall be rated to seal at air pressure of associated duct.

1.5 INSTALLATION

A. Provide backdraft dampers on all relief air and exhaust air outlets (except kitchen exhaust and fume hood exhaust).

B. Provide manual volume dampers at each supply air outlet, exhaust air inlet, ducted relief air, and return air inlet.

C. Provide fire dampers in all ducted and non-ducted openings in fire rated assemblies as required by the Ohio Basic Building.

D. Provide smoke dampers in smoke barriers where required by the Ohio Basic Building Code.

E. Provide duct silencers to control the air handling system discharge sound pressure level to acceptable levels.

F. Provide turning vanes in all mitered ductwork 90 degree elbows.

G. Provide duct mounted access doors and panels to all fire dampers, control damper, plenum housings.

END OF SECTION

SECTION 233313

EXTERIOR WALL LOUVERS

GENERAL GUIDELINES

1.1 SECTION INCLUDES
- A. Qualitative requirements for exterior wall louvers and soffit louvers.

1.2 SUBMITTALS
- A. Submittals are required and shall include scheduled material, sizes, quantities, and finish.

1.3 QUALITY ASSURANCE
- A. AMCA Standard 511.

1.4 COMPONENTS
- A. Rectangular Drainable Wall Louvers
  1. Stormproof, aluminum construction.
  2. Aluminum bird screen suitably braced to prevent sagging.
  3. Frame shall be constructed of 6063T5 extruded aluminum.
  4. Blades shall be constructed of 6063T5 extruded aluminum. Blades shall be the drainable type, positioned at a minimum 35 degree angle.
  5. Finish shall be factory applied baked enamel.

- B. Specialty Louvers-Polygon
  1. Stormproof, aluminum construction.
  2. Aluminum bird screen suitably braced to prevent sagging.
  3. Frame shall be constructed of 6063T5 extruded aluminum.
  4. Blades shall be constructed of 6063T5 extruded aluminum. Blades shall be the drainable type, positioned at a minimum 35 degree angle.
  5. Finish shall be factory applied baked enamel.

- C. Specialty Louvers Semi-Round or Round
  1. Stormproof, aluminum construction.
  2. Aluminum bird screen suitably braced to prevent sagging.
  3. Frame shall be constructed of 6063T5 extruded aluminum.
  4. Blades shall be constructed of 6063T5 extruded aluminum. Blades shall be the drainable type, positioned at a minimum 35 degree angle.
  5. Finish shall be factory applied baked enamel.

- D. Horizontal Soffit Louvers
  1. Horizontal soffit louvers shall be of aluminum construction.
  2. Frame to be of 6063T5 extruded aluminum.
  3. Blades to be of 6063T5 extruded aluminum.
  4. Aluminum bird screen suitably braced to prevent sagging.
  5. Finish shall be factory applied baked enamel.

1.5 INSTALLATION
- A. Install wall louvers of the sizes and quantities as required.

END OF SECTION

SECTION 233400

HVAC FANS

GENERAL GUIDELINES

1.1 SECTION INCLUDES
- A. Qualitative requirements for roof exhaust fans, in-line exhaust fans, utility fan sets, and ceiling exhaust fans.

1.2 SUBMITTALS
- A. Submittals are required and shall include material capacities, quantities, and accessories.

1.3 QUALITY ASSURANCE
- A. Sound Power Level Rating: AMCA 301.
- B. Performance Requirements: AMCA 210.
- C. All three-phase motors shall be protected with phase loss protection. Protection shall be provided by the electrical system, by built-in protection, or by protection built into a variable frequency drive.

1.4 COMPONENTS
- A. Utility Set Fans
  1. Drive: Belt driven.
  2. Housing: Steel, adjustable.
  3. Fan Wheel: Centrifugal, single inlet, steel [backward inclined] [forward curved].
  4. Fan Shaft: Steel.
  5. Shaft Bearings: Prelubricated, self-aligning, pillow block type ball bearings with 200,000 hour rated life.
  6. Belt Drives: Factory mounted, 1.4 service factor, adjustable pitch motor pulleys, oil-resistant non-sparking belts, and belt guards.
  7. Motors: Heavy duty, ball bearing type with overload protection.
  8. Accessories: [Gravity-actuated backdraft dampers] [Access doors] [Scroll dampers] [Spark-resistant construction] [Inlet screens] [Drain connection] [Weathershield hoods].
- B. Centrifugal Roof Ventilators
  1. Drive: [Belt] [Direct].
  2. Housing: Spun aluminum.
  3. Fan Wheel: Aluminum hub and wheel, backward-inclined blades.
  4. Belt Drive Assembly: Steel shaft, permanently lubricated ball bearings, cast iron adjustable pitch pulley, and fan motor isolated from airstream.
  5. Motor: Heavy duty, ball bearing type with overload protection.
  6. Accessories: [Variable speed controller] [Disconnect switch] [Bird screens] [Backdraft dampers].
  7. Roof Curb Configuration: [Self-flashing without cant strip and with mounting flange] [Built-in cant and mounting flange] [Built-in raised cant and mounting flange].
  8. Roof Curb Height: 12 inches standard above finished roof.

C. Upblast Centrifugal Roof Exhaust Fans

Spec Writer Note: Accessories not to be used on greese duct exhaust system.

1. Drive: Belt driven.
2. Wind Band, Fan Housing, and Base: Reinforced and braced aluminum.
3. Housing: Spun aluminum.
4. Fan Wheel: Aluminum construction, backward inclined centrifugal.
5. Belt Drive Assembly: Steel shaft, permanently lubricated ball bearings, cast iron adjustable pitch pulley with motor mounted outside the airstream.
6. Motor: Heavy duty, ball bearing type with overload protection.
7. ***Accessories: [Variable speed controller][Disconnect switch][Bird screen][Back draft dampers]***
8. Roof Curb Configuration: [Self-flashing without cant strip and with mounting flange] [Built-in cant and mounting flange] [Built-in raised cant and mounting flange].
9. Roof Curb Height: 18 inches.

D. Propeller Wall Ventilators

1. Drive: [Belt] [Direct].
2. Housing: [Spun aluminum] [Painted steel].
3. Fan Blade: Steel hub with steel propeller blades.
4. Belt Drive Assembly: Steel shaft, permanently lubricated ball bearings, cast iron adjustable pitch pulley, and fan motor isolated from airstream.
5. Motors: Shall be permanently lubricated, heavy duty type with overload protection.
6. Accessories: [Variable speed controller] [Disconnect switch] [Bird screens] [Backdraft dampers].

E. Ceiling Mounted Exhaust Fans

1. Drive: Direct.
2. Housing: Galvanized steel.
3. Fan Wheel: Centrifugal.
4. Grilles: Plastic, louvered.
5. Roof jack or wall cap and transition fittings.
6. Provide with backdraft dampers.
7. Provide with integral disconnect switch.

F. In-Line Centrifugal Fans.

1. Drive: [Direct] [Belt].
2. Housing: Galvanized sheet metal.
3. Fan Wheel: Centrifugal, aluminum.
4. Belt Drive Assembly: Steel shaft, permanently lubricated ball bearings, adjustable pitch motor pulleys, motor insulated from airstream, belt guards.
5. Motors: Heavy duty, ball bearing type with overload protection.
6. Accessories: [Variable speed controller] [Disconnect switch] [Backdraft dampers].

1.5 INSTALLATION

A. Install per manufacturers requirements.

END OF SECTION

SECTION 233423

ROOFTOP INTAKE, EXHAUST, AND RELIEF VENTILATORS

GENERAL GUIDELINES

1.1 SECTION INCLUDES

A. Qualitative requirements for rooftop intake and exhaust gravity ventilators.

1.2 SUBMITTALS

A. Submittals are required and shall include material and dimensions.

1.3 COMPONENTS

A. Low Silhouette Roof Ventilators
1. Shall be constructed of heavy gauge aluminum.
2. Support members shall be constructed of galvanized steel.
3. Hood shall be removable from base or hinged.
4. Shall include 2 inch galvanized steel bird screens.
5. Underside of hood shall be insulated to reduce condensation.
6. Exterior finish shall be baked enamel.

B. Louvered Penthouse Units
1. Shall be constructed of heavy gauge aluminum.
2. Support members shall be constructed of galvanized steel.
3. Hood shall be removable from base or hinged.
4. Shall include 2 inch galvanized steel bird screens.
5. Underside of hood shall be insulated to reduce condensation.
6. Exterior finish shall be baked enamel.

1.4 INSTALLATION

A. Provide the number and type of ventilators as required.

B. Mount units on roof curbs.

END OF SECTION

SECTION 233513

DUST COLLECTION SYSTEM

GENERAL GUIDELINES

1.1 SECTION INCLUDES

A. Qualitative requirements for woodworking shop dust collection cyclone separator, after-filter, ductwork, equipment hoods, floor sweeps, blast gates, and accessories.

1.2 SUBMITTALS

A. Submittals are required and shall include product data noting capacity, materials, controls, dimensions, and accessories and detailed ductwork layouts specific to each system.

1.3 QUALITY ASSURANCE

A. Design and installation shall be in accordance with the Industrial Ventilation Manual of the American Conference of Governmental Industrial Hygienists and the American National Standard for Fundamentals Governing the Design and Operation of Local Exhaust Ventilation Systems (ANSI/AIHA Standard Z9.2 – 2006).

B. All three-phase motors shall be protected with phase loss protection. Protection shall be provided by the electrical system, by built-in protection, or by protection built into a variable frequency drive.

1.4 DUST COLLECTOR

A. Primary collector shall be cyclone type for exterior installation.

B. Dust shall be precipitated into 55 gallon drums, (one or two as required).

C. Unit shall be constructed of heavy-gauge, cold rolled steel.

D. Final finish of primer and enamel paint.

E. Unit shall be factory assembled for final field assembly of major subassemblies.

1.5 AFTER-FILTER UNIT

A. After-filter shall be cloth tube type.

B. Dust removal shall be 100 percent down to 0.5 microns.

C. Unit shall be provided with a manually operated, motorized shaker.

D. Bottom of unit shall form a storage bin not less than 14 cubic feet for dust.

E. Unit shall be factory assembled for placement in field.

1.6 DUCTWORK AND ACCESSORIES

A. Ductwork shall be comprised of galvanized steel spiral pipe of not less than 22 gauge material.

B. Elbows used in installation shall be a minimum of 2 gauges heavier construction than the straight pipe of equal diameter.

C. Hoods shall be constructed of not less than 18 gauge galvanized steel material.

D. Flexible duct connections shall be noncollapsible, flexible metallic hose.

E. Blast gates shall allow for locking the gate in an open position or for removal of gate. Butterfly dampers are not permitted.

F. Cleanouts shall include a piano hinged door with spring clamps, locking latches, and edge felting to prevent air leaks.

1.7 INSTALLATION

A. Install in accordance with manufacturers requirements.

B. Secure all duct and elbow joints with self-tapping screws and caulk or hardcast type sealer. Duct tape is not acceptable.

C. Position cleanouts with hinged side at bottom center of ductwork.

D. Blast gates shall be positioned within ***easy*** reach of equipment operator.

E. Manufacturer's service representative shall provide compete check, test, and start-up on the system.

F. Construct hoods to suit actual equipment and site conditions.

END OF SECTION

SECTION 233515

WELDING EXHAUST SYSTEM

GENERAL GUIDELINES

1.1 SECTION INCLUDES
A. Qualitative requirements for source capture devices, ductwork, flexible hoses and accessories.

1.2 SUBMITTALS
A. Submittals are required and shall include product data noting capacity, materials, controls, dimensions, and accessories and detailed ductwork layouts.

1.3 QUALITY ASSURANCE
A. Design and installation shall be in accordance with 1) ANSI/AIHA Standard Z9.2 – 2006: American National Standard for Fundamentals Governing the Design and Operation of Local Exhaust Ventilation Systems and 2) Industrial Ventilation: A Manual of Recommended Practice, 4th Edition, Amercan Conference of Governmental Industrial Hygienists (ACGIH).

B. Flexible hoses shall meet UL-94 fire retardant requirements.

1.4 SOURCE CAPTURE DEVICES
A. Constructed of reinforced fiberglass for fire retardance.

B. Minimum 24 inches by 18 inches open face with an 8 inch diameter connection.

C. Vertical support rail that allows for adjustment of capture device height, designed for wall mounting.

D. Safety screen in throat.

1.5 DUCTWORK
A. Round ductwork shall be manufactured of heavy gauge galvanized steel with a spiral lockseam.

B. Fittings and couplings shall be constructed of 20 gauge galvanized steel.

1.6 FLEXIBLE HOSES
A. Manufactured of polyvinyl chloride reinforced with a hard drawn steel spiral bead wire.

B. Operating pressure of -7 psi to +5 psi.

C. Operating temperature of -10 degrees Fahrenheit to +180 degrees Fahrenheit.

1.7 INSTALLATION
A. Exhaust fans shall be as specified by Specification Section 233400 – HVAC Fans.
B. Install in accordance with manufacturers requirements.
C. Manufacturer's service representative shall provide compete check, test, and start-up on the system.

END OF SECTION

SECTION 233600

VARIABLE AIR VOLUME TERMINALS

GENERAL GUIDELINES

1.1 SECTION INCLUDES

A. Qualitative requirements for variable air volume reheat terminals and fan-powered variable air volume reheat terminals.

1.2 SUBMITTALS

A. Submittals are required and shall include product data noting the following:
1. Product data indicating dimensions, weights, capacities, and materials.
2. Static pressure requirements.
3. Sound performance levels.
4. Accessories.

1.3 QUALITY ASSURANCE

A. Construction standard shall meet NFPA 90A.

B. Product certification shall comply with ARI 880.

C. Sound power level rating shall comply with AMCA 300, ASHRAE 68, and AMCA 301.

D. Coil performance shall comply with ARI 410.

E. Insulation standard shall comply with UL 181.

1.4 COMPONENTS

A. Single-Duct Reheat Terminal Units
1. Configuration: Volume-damper assembly inside unit casing.
2. Casing: Zinc-coated steel
3. Casing Lining: 1-inch thick, 1-1/2 pound density fiberglass insulation with erosion-resistant coating or 0.75 inch thick, 1-1/2 pound density closed cell foam insulation (fiber free).
4. Air Inlets: Round or flat oval with air velocity sensor.
5. Volume Damper: [Galvanized steel] [extruded aluminum] [cylindrical flow control device] with maximum airflow leakage of [2 percent at 1-inch wg] [2 percent at 3-inch wg] [3 percent at 3-inch wg] [3 percent at 6-inch wg].
6. Damper Position: [Normally open] [Normally closed].
7. Multi-outlet Discharge Section: Insulated plenum with ductwork discharge collars and locking balancing damper.
8. Hot-Water Heating Coil: Copper tube and aluminum finned coil.
9. Velocity sensor: multi-point averaging type.
10. Controls: Electronic DDC controls.
11. Each unit shall include the following control accessories:
    a. Control transformer and disconnect switch.
    b. Mount controls in NEMA 250 Type 1 enclosure.

B. Fan-Powered Reheat Terminal Units
   1. Configuration: Volume-damper assembly inside unit casing.
   2. Casing: Zinc-coated steel
   3. Casing Lining: 1-inch thick, 1-1/2 pound density insulation with erosion-resistant coating.
   4. Air Inlets: Round or flat oval with air velocity sensor.
   5. Access: Removable panels with cam-lock fasteners.
   6. Volume Damper: [Galvanized steel] [extruded aluminum] [cylindrical flow control device] with maximum airflow leakage of [2 percent at 1-inch wg] [2 percent at 3-inch wg] [3 percent at 3-inch wg] [3 percent at 6-inch wg].
   7. Damper Position: [Normally open] [Normally closed].
   8. Fan: Series or parallel type unit located in acoustically lined plenum housing a direct-drive, forward-curved fan, and thermally protected PSC motor.
   9. Multi-outlet Discharge Section: Insulated plenum with ductwork discharge collars and locking balancing damper.
   10. Hot-Water Heating Coil: Copper tube and aluminum finned coil.
   11. Velocity sensor: multi-point averaging type.
   12. Filter: Attenuating air inlet section complete with 1 inch filter rack.
   13. Controls: Electronic DDC controls.
   14. Each unit shall include the following control accessories:
      a. Control transformer and fused disconnect switch.
      b. Fan solid state speed controller.
      c. Fan relay switch.
      d. Mount controls in NEMA 250 Type 1 enclosure.

1.5 INSTALLATION

A. Install in accordance with manufacturers requirements.
B. Startup and training to be provided by a factory-trained service technician.
C. Parallel fan-powered terminal units shall not be installed in classrooms or other acoustically sensitive spaces.

END OF SECTION

SECTION 233713

AIR OUTLETS AND INLETS

GENERAL GUIDELINES

1.1 SECTION INCLUDES

A. Qualitative requirements for supply air linear slot diffusers; return air linear diffusers; return air, exhaust air, and transfer air, grilles and registers; supply air registers; supply air diffusers; wall linear diffuser; egg crate return air or transfer air grilles; heavy duty wall return air grille or register; and above floor displacement type air devices.

1.2 SUBMITTALS

A. Submittals are required and shall be scheduled by room number to include material, sizes, quantities, finishes, and accessories.

1.3 QUALITY ASSURANCE

A. ASHRAE Standard 70 for performance testing.

B. NFPA 90A for installation.

1.4 COMPONENTS

A. Supply Air Linear Slot Diffusers
1. 22 gauge aluminum or heavy gauge steel diffusers assembly with factory baked white enamel finish or powder paint white finish.
2. 26 gauge zinc-coated steel inlet boot, maximum 12 inches high.
3. Single/multiple slots with extruded or stamped vanes.
4. Maximum 50 CFM/lineal ft./slot.
5. Third band SPL 40 DB without room credit.
6. 1/2 inch glass fiber acoustically insulated inlet plenum/boot.

B. Return Slot Diffusers
1. 22 gauge aluminum or heavy gauge steel diffuser assembly with factory baked white enamel finish or powder paint white finish.
2. 26 gauge zinc-coated steel inlet boot, maximum 12 inches high.
3. Single/multiple slots.
4. Maximum 100 cfm/lineal ft./slot.
5. 1/2 inch glass fiber insulated plenum/boot.

C. Return Air, Exhaust and Air Transfer Grilles and Registers
1. All aluminum construction.
2. Angled louvers spaced 1/2 inch on center.
3. One set of fixed louvers parallel to long dimension.
4. Baked white enamel finish or powder paint white finish.

D. Supply Air Registers
   1. All aluminum construction.
   2. Double deflection louvers.
   3. Front and rear louvers individually adjustable, horizontal to the front.
   4. Baked white enamel finish or powder paint white finish.

E. Supply Air Diffuser
   1. All 18 gauge steel diffuser.
   2. Solid face panel with curved back pan designed for VAV usage.
   3. Opposed blade volume damper in unaccessible locations.
   4. Baked white enamel finish or powder paint white finish.
   5. Provide with equalizing grid.

F. Wall Linear Diffuser
   1. All aluminum construction.
   2. Fixed bar type louvers.
   3. Provide with selected factory finish.

G. Eggcrate Grille Return Air Grille or Transfer Grille
   1. 1/2 inch by 1/2 inch by 1/2 inch aluminum grid.
   2. Aluminum border if required.
   3. Provide frame for appropriate ceiling mounting.
   4. Baked white enamel finish or powder paint white finish.

H. Heavy Duty Wall Return Air Grille (for use in gymnasiums and locker rooms)
   1. Heavy gauge steel construction.
   2. Angled louvers spaced 1/2 inch on center.
   3. Baked aluminum enamel or powder paint aluminum finish.

I. Displacement Type Air Devices
   1. Heavy duty galvanized steel construction
   2. Powder coated finish
   3. Rubber lip seal

1.5 INSTALLATION

A. Provide the number and type of air devices as required.

END OF SECTION

SECTION 233716

FABRIC AIR DISTRIBUTION DEVICES

GENERAL GUIDELINES

1.1 SECTION INCLUDES

A. Qualitative requirements for fabric ductwork/air distribution devices and its suspension.

1.2 SUBMITTALS

A. The fabric duct manufacturer shall study the floor plans and application and the design data noted on the floor plans, and shall provide engineered to scale drawings showing the supports layout, duct runs, orifice layout and performance data, including throws.

B. Manufacturer shall have documented design support information including duct sizing, vent and orifice location, vent and orifice sizing, length and suspension. Parameters for design, including maximum air temperature, velocity, pressure and fabric permeability, shall be considered and documented in the shop drawing submittal.

1.3 QUALITY ASSURANCE

A. Fabric ducts shall be classified by Underwriter's Laboratories in accordance with the 25/50 flame spread / smoke developed requirements of NFPA 90-A. All sections must be labeled with the logo and classification marking of Underwriter's Laboratories.

B. Fabric ducts shall be treated with an EPA registered antimicrobial agent.

C. Manufacturer shall provide a 10-year warranty for products supplied for the fabric portion of this system.

D. Installation shall be in strict accordance with the manufacturer's instructions.

1.4 CONSTRUCTION

A. Fabric ducts shall be constructed of woven fire retardant fabric complying with the following physical characteristics:
   1. Fabric Construction: 100% Flame Retardant and treated with a machine wash-able anti-microbial agent from the manufacturer.
   2. Weight: 6.75 oz./yd^2 per ASTM D3776
   3. Air Permeability: 2 (+2/-1)cfm/ft^2 per ASTM D737, Frazier
   4. Temperature Range: 0 degrees F to 180 degrees F
   5. Fire Retardancy: Classified by Underwriters Laboratories in accordance with the flame spread/smoke developed requirements of NFPA 90-A and ICC AC167.
   6. Antimicrobial agent shall be proven 99% effective after 10 laundry cycles per AATCC Test Method 100.

1.5 SYSTEMS FABRICATION REQUIREMENTS

A. Air dispersion accomplished by linear vent and permeable fabric, linear vent to consist of many 3/16" diameter open orifices rather than a mesh style vent to reduce maintenance requirements of mesh style vents.

B. Size of and location of linear vents to be specified and approved by manufacturer.

C. Inlet connection to metal duct via fabric draw band with anchor patches as supplied by manufacturer. Anchor patches to be secured to metal duct via. zip screw fastener – supplied by contractor.

D. Inlet connection includes zipper for easy removal / maintenance.

E. Lengths to include required zippers as specified by manufacturer.

F. System to include Adjustable Flow Devices to balance turbulence, airflow and distribution as needed. Flow restriction device shall include ability to adjust the airflow resistance from 0.06 – 0.60 in w.g. static pressure.

G. End cap includes zipper for easy maintenance.

H. Fabric system shall include connectors to accommodate suspension system listed below.

I. Any deviation from a straight run shall be made using a gored elbow or an efficiency tee. Normal 90 degree elbows are 5 gores and the radius of the elbow is 1.5 times the diameter of the Fabric ductwork.

1.6 DESIGN PARAMETERS

A. Fabric diffusers shall be designed from 0.25" water gage minimum to 3.0" maximum.

B. Fabric air diffusers shall be limited to design temperatures between 0 degrees F. and 180 degrees F.

C. Design CFM, static pressure and diffuser length shall be designed or approved by the manufacturer, in accordance with the plans and specs.

1.7 SUSPENSION HARDWARE

A. Tension Cable: System shall be installed using a tension cable system including double strands (2 Row) of heavy weight stainless steel cable located 3" above the 10 and 2 o'clock locations of the Fabric ductwork system. Hardware to include cable, eye bolts, cable clamps and turnbuckle(s) as required. System attachment shall be made using nylon snap clips spaced 24 inches.

B. Suspended H-Track: System shall include double (2 Row) runs of aluminum H-Track system located 1.5" above the 10 and 2 o'clock (2 Row) locations of Fabric ductwork system. Hardware to include 10' sections of track, splice connectors, track endcaps and vertical cable support kits – consisting of a length of cable with a locking stud end and quick cable connectors. Radius aluminum track must be included for all radius sections. Fabric / Track attachment shall be either a continuous supporting cord or snap tabs, a detachable sliding tab positioned every 24" along the length of the system.

C. Surface mount ("D" shape): System shall include aluminum Flush-Mount system located flush with the top of the fabric duct system. Width between mounting points shall be 2" wider than the specified diameter of the D-Shape fabric ductwork. Hardware to include 12' sections of track, splice connections and end caps as required. System attachment shall be made by cord sewn into top side flaps of fabric ductwork system supported entire length.

1.8 DELIVERY, STORAGE AND HANDLING

A. Protect fabric air dispersion systems from damage during shipping, storage and handling.

B. Where possible, store products inside and protect form weather. Where necessary to store outside, store above grade and enclose with a vented waterproof wrapping.

1.9 CLEANING AND PROTECTION

A. Clean air handling unit and ductwork prior to the fabric ductwork system unit-by-unit as it is installed. Clean external surfaces of foreign substances that may cause corrosive deterioration of facing.

B. Temporary Closure: At ends of ducts not connected to equipment or distribution devices at time of ductwork installation, cover with polyethylene film or other covering that will keep the system clean until installation is completed.

C. If fabric ductwork systems become soiled during installation, they should be removed and cleaned following the manufacturers standard terms of laundry.

END OF SECTION

SECTION 233718

UNDERFLOOR AIR DISTRIBUTION SYSTEM

PART 1 GENERAL

1.01 SECTION INCLUDES

A. The Contractor shall furnish and install a complete access floor air terminal system as shown on the drawings. All wiring, controls and other accessories required for a complete system shall be included. Contractor shall provide submittals, samples, and operation and maintenance documentation. Specific equipment includes: (List each type of terminal required on the project.)

1. Variable Volume Units
2. Variable Volume Units with Duct Collar
3. Perimeter Zone or Conference Room Heating/Cooling Units
4. Fan-Powered Underfloor Hydronic Heating Units
5. Power and Control Module for up to four (4) VAV units.
6. Power and Control Module for up to fourteen (14) VAV units
7. 25' Plug and Play Cable Set for Connection of VAV Actuators, power and control module, fan powered heating units, and/or cooling zones
8. 50' Plug and Play Cable Set for Connection of Controller to Thermostat
9. 25' Plug and Play Cable Set for Extension of Plug and Play Cable Sets
10. 25' Plug and Play Cable Set for Connection of Auxiliary Sensor to heating zones
11. PAP-E 5' Plug and Play Cable Set for Connection of fan powered heating units and heating zones
12. PAP-F 10' Plug and Play Cable Set for Connection of Controller to Thermostat

1.02 RELATED WORK NOT INCLUDED

A. The floor holes required for installation of floor air terminals shall be coordinated with the Access Floor Contractor. All floor openings shall be prepared by the Access Floor Contractor, as shown on the floor plan drawings. Required plenum barriers, sealing of plenum, structural supports, carpet cutouts and any other floor related appurtenances shall be prepared by the Access Floor Contractor as shown on the drawings.

B. All electrical power needed for terminal operation shall be coordinated with the Electrical Contractor. The electrical power shall be furnished by the Electrical Contractor and installed as shown on the drawings.

C. Control interfaces and/or integration with the Building Automation System (BAS) or other control system shall be furnished by the Controls Contractor.

1.03 QUALITY ASSURANCE

A. All equipment and components shall be suitable for use in an environmental air plenum.

B. All components within the air stream including under-floor terminals shall conform to the NFPA 90A Standard for Flame/Smoke/Fire contribution of 25/50/0.

C. All units shall be the product of a manufacturer regularly engaged in the production of terminal units and all supplied units shall be from the same manufacturer.

D. Units shall be specifically designed for an access floor installation and complete with all necessary controls and wiring as required to provide operation according to manufacturer's recommendations.

E. Terminal operation shall be coordinated with air handling system and control system to assure complete compatibility.

F. Equipment shall be listed under and conform to appropriate sections of U.L., CSA, E.T.L. and other testing laboratory requirements.

1.04 SUBMITTALS

A. Submit dimensioned drawings, performance and product data for approval. Include listing of discharge and radiated sound power level for each of second through sixth octave for fan-powered terminals. Data shall include all wiring diagrams, control sequences and power requirements as applicable to the product and coordination with other systems.

1.05 OPERATION AND MAINTENANCE DATA

A. Quantity: 3

B. Content:
1. Maintenance and Service Contracts: Provide a list, with each product, name, address and telephone number of:
   a. Subcontractor or installer.
   b. Maintenance contractor, as appropriate. Identify area of responsibility of each.
   c. Local source of supply for parts and replacement.
2. Table of Contents: List all products in the order in which they appear in the specifications and label accordingly.
3. Sections: All sections shall be separated with an appropriate tabbed section divider with the appropriate specification section number. Provide the manufacturer's written installation and maintenance instructions for all items required.
4. Routine Maintenance: Provide a list indicating all routine maintenance procedures based on recommended intervals.
5. Contents: Include copies of approved submittal data, installation instructions, operation and maintenance instructions and parts lists.

1.06 WARRANTY

A. The air terminal materials and workmanship shall be guaranteed to be free from defects for a period of one year after Owner acceptance.

B. Contractor and/or vendor shall maintain availability of replacement parts compatible with the terminals for no less than ten years after acceptance.

2.01 GENERAL DESCRIPTION

A. The Contractor shall furnish a pre-engineered, prefabricated, access floor air terminal system that includes all necessary components from a single source of responsibility/manufacturer. All components including any controls and wiring shall be furnished as a "plug-and-play" system of modular and interchangeable components that are factory prepared to operate as a complete system. (Because some owners may want special controls this section may need to be modified to address this issue.)

2.02 FABRICATION

A. VAV Terminal Units

1. Unit chassis shall be minimum 18-gauge galvanized steel that shall enclose and support all components. Chassis construction shall admit plenum air from only one direction to provide a method of adjusting delivery volume for floor velocity pressure.
2. Unit shall have a die cast aluminum trim ring that shall engage with the chassis and floor to provide complete support for the air grilles. Die cast aluminum ring color shall be as shown on the finish schedule or manufacturer's standard color to be selected from submittal data. Trim ring shall be attached to chassis and floor panel by means of concealed removable screws. (A round trim ring option is available at no additional cost. Special colors are available at additional cost.)
3. Unit shall have one or more removable grilles made of die cast aluminum material that matches the trim ring in color. Grilles shall include a means for adjusting air throw and pattern and shall fit securely within the trim ring and chassis without mechanical fasteners. Grilles shall be capable of supporting a load of 1250 pounds (565 kg) without permanent damage. No openings in the grilles shall be larger than .30 inches (7.6 mm) for shoe heal penetration protection.
4. Unit shall include an integral damper and damper operator. Damper shall be made of 20-gauge galvanized steel and be sealed with felt or foam type gasket material. Damper operation shall provide a throttling of the airflow that produces a nominal constant velocity, variable volume flow from full shut-off to full open condition. The damper shall vary the active outlet area of the grilles while maintaining velocity of the supply air through the grille. Damper operator shall operate on 24VAC and use no more than 6 volt-amperes per unit. Damper motor electrical connection shall be by means of a modular connector, polarized to prevent incorrect connection. Noise produced by damper motor shall not exceed 35 dB-A at a distance of 1 meter from the unit.

B. Ducted Collar; VAV Terminal Units (These units provide control of the air flow for a ducted system.)

1. Unit chassis shall be minimum 18-gauge galvanized steel that shall enclose and support all components. Chassis construction shall admit plenum air from only one direction to provide a method of adjusting delivery volume for floor velocity pressure.

2. Unit shall have a die cast aluminum trim ring that shall engage with the chassis and floor to provide complete support for the air grilles. Die cast aluminum ring color shall be as shown on the finish schedule or manufacturer's standard color to be selected from submittal data. Trim ring shall attached to chassis and floor panel by means of concealed removable screws. (A round trim ring option is available at no additional cost. Special colors are available at additional cost.)
3. Unit shall have one or more removable grilles made of die cast aluminum material that matches the trim ring in color. Grilles shall include a means for adjusting air throw and pattern and shall fit securely within the trim ring and chassis without mechanical fasteners. Grilles shall be capable of supporting a load of 1250 pounds (565 kg) without permanent damage. No openings in the grilles shall be larger than .30 inches (7.6 mm) for shoe heal penetration protection.
4. Unit shall include an integral damper and damper operator. Damper shall be made of 20-gauge galvanized steel and be sealed with felt or foam type gasket material. Damper operation shall provide a throttling of the airflow that produces a nominal constant velocity, variable volume flow from full shut-off to full open condition. The damper shall vary the active outlet area of the grilles while maintaining velocity of the supply air through the grille. Damper operator shall operate on 24VAC and use no more than 6 volt-amperes per unit. Damper motor electrical connection shall be by means of a modular connector, polarized to prevent incorrect connection. Noise produced by damper motor shall not exceed 35 dB-A at a distance of 1 meter from the unit.
5. The chassis design shall include a removable end panel for attachment of a supply air duct using standard duct size of 6 inches (152 mm) round for a 10 inch deep unit and 5 inches (127 mm) round for a 7 inch deep unit.

C. Perimeter Zone Heating/Cooling VAV Terminal Units (These units provide control of the air flow from the plenum for cooling and from an attached duct for heating with a switchover mode of control.)

1. Unit chassis shall be minimum 18-gauge galvanized steel that shall enclose and support all components. The chassis design shall include an end panel for attachment of a supply air duct using standard duct size of 6 inches (152 mm) round for a 10 inch deep unit and 5 inches (127 mm) round for a 7 inch deep unit. Chassis construction shall admit plenum air from only one direction to provide a method of adjusting delivery volume for floor velocity pressure. Plenum air admittance openings shall be on opposite end of the chassis from the duct connection.
2. Unit shall have a die cast aluminum trim ring that shall engage with the chassis and floor to provide complete support for the air grilles. Die cast aluminum ring color shall be as shown on the finish schedule or manufacturer's standard color to be selected from submittal data. Trim ring shall be attached to chassis and floor panel by means of concealed removable screws. (A round trim ring option is available at no additional cost. Special colors are available at additional cost.)

3. Unit shall have one or more removable grilles made of die cast aluminum material that matches the trim ring in color. Grilles shall include a means for adjusting air throw and pattern and shall fit securely within the trim ring and chassis without mechanical fasteners. Grilles shall be capable of supporting a load of 1250 pounds (565 kg) without permanent damage. No openings in the grilles shall be larger than .30 inches (7.6 mm) for shoe heal penetration protection.
4. Unit shall include an integral damper and damper operator. Damper shall be made of die cast aluminum material and be sealed with felt or foam type gasket material. Damper operation shall provide a throttling of the airflow that produces a nominal constant velocity, variable volume flow from full shut-off to full open condition. The damper shall vary the active outlet area of the grilles while maintaining velocity of the supply air through the grille. Damper operator shall operate on 24VAC and use no more than 6 volt amperes per unit. Damper motor electrical connection shall be by means of a modular connector, polarized to prevent incorrect connection. Noise produced by damper motor shall not exceed 35 dB-A at a distance of 1 meter from the unit.
5. Unit damper shall be sequenced to admit heating air from duct connection and cooling air from the plenum. In switchover mode, unit shall also act as a return air grille to remove air from the space and deliver it through the duct connection to a heating terminal under the floor.

D. Fan Powered Underfloor Heating Terminal Unit – 150 CFM Nominal Size (These units are required when using terminals for perimeter heating. They include a power transformer to provide power to up to 14 VAV terminals and chaining ports for zones with up to 3 fan powered heating terminal units.)

1. Unit casing: 22-gauge minimum galvanized steel lined with 1/2 in. thick, 1-1/2 lb./ft.3 density, dual thermal/acoustical fiberglass insulation meeting NFPA 90A requirements and U.L. 181 erosion control requirements. Insulation shall be protected with continuous vapor barrier. Casing shall have a removable side or top panel suitable for equipment service. Leakage not to exceed 2% of design flow at 2.0" w.g. Enclosure to have Plug and Play connectors for attachment of thermostat inputs, thermostat outputs, and outputs to VAV terminals in the zone.
2. Fan assembly: Direct drive centrifugal with forward curved blades, internally suspended on rubber isolators. Motor to be permanent split capacitor with thermal overload protection and toggle disconnect.
3. Return air filter frame and 1" throw-away filter.
4. Discharge and radiated sound power levels shall not exceed those shown on the schedule.
5. Hydronic Heating Coil
   a. Heating coil shall be integral with the terminal unit, with coils having one row, same end connections. Tube-to-header joints shall be expanded and reinforced with brass bushing for pressure-tight joint. Maximum working ratings shall be 200 PSIG, 325°F. Plate-type aluminum fins with full fin collars for maximum fin-tube contact and accurate spacing, mechanically bonded to tubes for permanent fin-tube bond.
   b. Galvanized steel casing with flanged or drive and slip connection.

6. Control transformers rated for specified line voltage input and 24VAC output at 40VA for thermostat operation and 100 VA for VAV operation (adequate power for up to 14 VAV units in zone.)

E. Power and Control Module
1. 120 Volt, single-phase power input.
2. Integral Transformer, 24VAC, 40 volt-ampere output rating.
3. One modular output plug and play connector compatible with MIT Plug and Play wiring system.
4. Modular input connector for thermostat connection using Plug and Play wiring system.
5. Steel housing, minimum 24-gauge with knockouts.

F. Power and Control Module
1. 120 or 277 Volt, single-phase power input.
2. Integral Transformer, 24VAC, 90 volt-ampere rated output with 3-amp switching module.
3. Two modular output plug and play connectors compatible with Plug and Play wiring system.
4. One modular input connector for thermostat connection using Plug and Play wiring system (One is used for daisy-chaining zones larger than 14 terminals).
5. One modular output connector for daisy-chaining units (up to 3 total) using a single controller for use in zones larger than 14 boxes.
6. Steel housing, minimum 24-gauge with knockouts.

G. Plug and Play Cable Set for VAV connection
1. Plenum rated, 4 conductor, 16-gauge, 25 feet (8 m) long, with Plug and Play wiring connectors attached on each end.
2. Factory tested for continuity, shorts, opens and proper impedance.

H. Plug and Play Cable Set for Thermostat Connection
1. Plenum rated, 4 conductor, 16-gauge, 50 feet (16 m) long, with Plug and Play wiring connector attached on one end and pig tail on the other.
2. Factory tested for continuity, shorts, opens and proper impedance.

I. Plug and Play Extension Cable Set
1. Plenum rated, 4 conductor, 16-gauge, 25 feet (8 m) long, with male Plug and Play wiring connector attached on one end and female connection on the other end.
2. Factory tested for continuity, shorts, opens and proper impedance.

J. Plug and Play Cable Set for connection to auxiliary input sensor
1. Plenum rated, 2 conductor, 18-gauge, 25 feet (8 m) long, with Plug and Play wiring connector attached on one end and pig tail on the other.
2. Factory tested for continuity, shorts, opens and proper impedance.

K. Plug and Play Cable Set for connection to fan powered terminals
1. Plenum rated, 4 conductor, 16-gauge, 5 feet (2 m) long, with Plug and Play wiring connectors attached on each end.
2. Factory tested for continuity, shorts, opens and proper impedance.

L. Plug and Play Cable Set for Thermostat connection
   1. Plenum rated, 4 conductor, 16-gauge, 10 feet (2 m) long, with Plug and Play wiring connector attached on one end and pig tail on the other.
   2. Factory tested for continuity, shorts, opens and proper impedance.

M. Space Thermostat and DDC Controller (Required when using LON bus for local and remote setpoint adjustment and monitoring of a cooling only zone or cooling/heating zone with fan powered heating unit, 1 or 2 stage electric, or 2 position hot-water heat.)
   1. Plastic enclosure, UL 94-5V rated, suitable for wall mounting with control setpoint consisting of an adjustable setpoint knob. Size of enclosure shall be suitable for mounting on a single/double gang electrical box in either the horizontal orientation. Provide terminal block connection to wiring. Thermostat enclosure shall consist of a base and separate enclosure to permit attachment of wiring independently of the electronics.
   2. Device shall provide proportional-integral, PI, control and use an NTC thermistor with low drift and have compatible output/input with controller. Setpoint knob shall have optional range stops with maximum range of 55 to 90 degrees F. (12.8 to 32.2 C).
   3. Unit shall comply with FCC Part 15, NEC Class B, and be listed by UL.
   4. Device shall include an interface and jack for connection of LON bus.

N. Space Thermostat and DDC Controller (Required when using bus for local and remote setpoint adjustment and monitoring of a cooling only zone or cooling/heating zone with modulating heat.)
   1. Plastic enclosure, UL 94-5V rated, suitable for wall mounting with control setpoint consisting of an adjustable setpoint knob. Size of enclosure shall be suitable for mounting on a single/double gang electrical box in either the horizontal orientation. Provide terminal block connection to wiring. Thermostat enclosure shall consist of a base and separate enclosure to permit attachment of wiring independently of the electronics.
   2. Device shall provide proportional-integral, PI, control and use an NTC thermistor with low drift and have compatible output/input with VAV controller. Setpoint knob shall have optional range stops with maximum range of 55 to 90 degrees F. (12.8 to 32.2 C).
   3. Unit shall comply with FCC Part 15, NEC Class B, and be listed by UL.
   4. Device shall include an interface and jack for connection of LON bus.

3.01 INSTALLATION

A. Provide the number and type of components as required for complete and functional system.

END OF SECTION

SECTION 233800

KITCHEN HOOD VENTILATION SYSTEM

GENERAL GUIDELINES

1.1 SECTION INCLUDES

A. Qualitative requirements for kitchen canopy hood exhaust and make-up air system complete with fans, heating equipment, roof curbs, ductwork, controls, fire suppression system, and related accessories.

1.2 SUBMITTALS

A. Submittals are required and shall include product data noting capacity, materials, controls, dimensions, and accessories and detailed ductwork and fire suppression layouts specific to each system.

1.3 QUALITY ASSURANCE

A. Canopies shall be labeled and listed in accordance with UL 710.
   1. Listing shall be for installation without exhaust dampers.

B. Fabrication shall be in accordance with NFPA 96.

C. Assembly shall bear the National Sanitation Foundation (NSF) Seal of Approval.

D. Fan performance rating shall comply with AMCA 210.

E. Fan systems shall be UL listed and labeled for transfer of grease laddened vapors.

F. Canopies shall comply with the requirements approved by BOCA, SBCC, and ICBO.

G. Gas-fired system shall comply with AGA requirements.

H. Rooftop, gas-fired make-up air handling units shall have the ETL label.

I. Balance of air systems shall be by an independent air balancing firm certified as NEBB or AABC.

J. All three-phase motors shall be protected with phase loss protection. Protection shall be provided by the electrical system, by built-in protection, or by protection built into a variable frequency drive.

K. Kitchen hood systems shall meet the requirements of ASHRAE Standard 90.1.

1.4 CANOPY

A. Canopy interior and exterior exposed surfaces shall be constructed of 18 gauge, type 304 stainless steel.

B. Integral duct collars for exhaust without fire dampers.

C. Liquid tight external welds at all joints and seams.

D. Filter housing shall be constructed of 304 stainless steel complete with UL Classified aluminum baffle-type grease filters.

E. ***Fluorescent*** vapor-proof lights in quantity to provide a minimum of 50 footcandles on the lowest cooking surface.

F. Insulated supply air plenum with minimum 1 inch, 3 pounds per cubic foot material.

G. Integral supply air duct collar with 18 gauge steel fire damper having fusible link operation.

1.5 EXHAUST FAN

A. Upblast type arrangement and UL listed for operation in grease removal having built-in grease trough and isolated motor compartment.

B. Bird screens and dampers are not permitted.

C. Fan discharge shall be minimum 40 inches above roof surface.

D. Unit shall include a hinged base for access to duct and blower.

1.6 NO-HEAT SUPPLY AIR FAN

A. Fan shall be a forward-curved, double-width, belt-driven, double-inlet blower, roof-mounted in a downblast configuration, statically and dynamically balanced.

B. Fan motor shall include permanently lubricated ball bearings

C. Housing shall be constructed of heavy gauge, galvanized steel, primed and painted with removable top for service access.

D. Unit shall be provided with a minimum 12 inch high roof curb.

E. Filters shall be 1 inch thick aluminum mesh and UL Classified.

1.7 HEATED MAKE-UP AIR SYSTEM

A. Roof-mount makeup air system shall be factory assembled and tested.

B. Fan and motor assembly shall be mounted on vibration isolators.

C. Motors shall be permanently lubricated, heavy-duty, ball bearing-type.

D. Fan wheels shall be forward-curved, double-width, double-inlet type, statically and dynamically balanced.

E. Housing shall be constructed of heavy gauge, galvanized steel, primed and painted with removable panels for service access.

F. A pre-wired control center shall include master disconnect switch, fuse blocks, magnetic motors starters, control circuit transformer, distribution terminal control strip, all UL Listed.

G. Direct-fired gas heater section
1. Burner shall be constructed of stainless steel having a gas valve control with capillary type sensor, main and pilot gas valves and pressure regulators, main and pilot shut off valves, airflow switch, high limit control, flame safeguard control, flame rod and electronic ignition pilot.
2. Turndown range of 20 to 1.
3. Piping and controls housed within the galvanized housing of the make-up air unit.

H. Electric heater section
1. Heater terminal box and frame shall be constructed of heavy-gauge galvanized steel.
2. Heating elements shall be supported using ceramic insulators.
3. Heating element shall be a UL Listed open coil type electric heater.
4. Provide with a disc type automatic high limit switch and closed disc type manual reset switch.
5. Unit shall include modulating step controller, airflow switch, circuit fusing, and door interlocking disconnect switch.
6. Heater and controls housed within the galvanized housing of the make-up air unit.

I. Commercial kitchen Type I and Type II hood systems larger than 5,000 cfm shall have variable-speed control for exhaust and makeup air fans to reduce hood airflow rates at least 50 percent during those times when cooking is not occurring and the cooking appliances are up to temperature in a standby, ready to cook mode.

1.8 FIELD FABRICATED DUCTWORK AND ACCESSORIES

A. Exhaust ductwork shall be constructed of 16 gauge carbon steel, welded liquid tight.

B. Supply ductwork shall be constructed of 18 gauge galvanized steel and installed with external duct insulation and vapor barrier.

C. Cleanouts are required in changes of direction of exhaust ductwork.

1.9 ELECTRICAL

A. Motor control panel enclosing motor contactors, overload relays, interface terminals for fire protection system and remote switch panel shall be located in the kitchen storage room.

B. Remote switch panel shall be mounted on face of kitchen canopy and shall include the following:
1. Lights on-off switch
2. Exhaust/supply fan systems on-off switch with pilot light
3. [Temperature setting for heating make-up air system]

1.10 FIRE PROTECTION SYSTEM

A. Fire protection system shall be a wet chemical system and shall be installed to be in compliance with UL.

B. System to be activated by fusible links connected to an automan release.

C. Automan release shall trip 2 electric, double-pole, double-throw micro switches.

D. Piping shall be concealed wherever possible. Exposed piping, fittings, and nozzles shall be constructed of stainless steel with chrome plated elbows.

E. Supply fan shall shut down upon activation of fire suppression system. Exhaust fan shall remain running.

F. Provide automatic, non-electric; or manual reset, electric, gas appliance shut off valves.

G. Provide remote manual fire pull device.

H. Provide storage tank and mounting hardware.

1.11 INSTALLATION

A. Install in accordance with manufacturers requirements.

B. Manufacturer's service representative shall provide compete check, test, and start-up on the system.

C. Locate the manual pull station a minimum of 10'-0" from the kitchen canopy in the path of egress from the cooking area.

END OF SECTION

SECTION 234323

AIR CLEANING SYSTEM

Spec Writer Note: If the project is to be LEED Certified, the IAQ procedure is not permitted in LEED Prereq. EQp1.

GENERAL GUIDELINES

1.1 DESCRIPTION OF WORK

A. Qualitative requirements for the design, performance and installation of an air purification system intended for use as part of the air handling units. For the purpose of compliance with the ventilation code using the indoor air quality procedure.

1.2 RELATED WORK PERTAINING TO OTHER SPECIFICATIONS

A. Testing, balancing and inspection services

B. Duct work

C. Electrical Wiring

D. Control Wiring

1.3 SUBMITTALS: The following information shall be submitted to the design professional prior to the release of any equipment for fabrication.

A. Product performance data for filters, gauges and housings.

B. Product drawings detailing all physical, electrical, duct work and control requirements.

C. Manufacturer's Follow-up Service Program.

1.4 REFERENCE CODES AND STANDARDS

A. ASHRAE Standards 62 & 52

B. UL Standard 867

C. CFR 39-75 Title 21 April 17, 1974

D. National Electric Code NFPA 70, 1990

1.5 QUALITY ASSURANCE

A. The Air Purification System shall be a product of an established manufacturer with installations in successful operation for a minimum of 10 years.

B. A qualified representative from the manufacturer shall be available to inspect the installation of the air purification system to ensure installation in accordance with manufacturer's recommendation.

C. The complete Air Purification System complete with power and control wiring, safety switches, airflow switches, controls, housing and filters shall be listed by either UL or ETL.

D. Provide Indoor Air Quality calculations using the formulas within ASHRAE Standard 62-01 to validate acceptable indoor air quality at the quantity of outside air scheduled.

1.6 DESIGN AND PERFORMANCE CRITERIA: The operation of the air purification system shall be through a combination of Catalytic, and Association / Disassociation processes.

A. Each air handling unit shall contain an Air Purification System capable of:
   1. Effectively controlling microorganisms (mold, bacteria, etc.).
   2. Controlling gas phase contaminants generated from food, human occupants and the school building.
   3. High efficiency particulate filtration.

B. The Air Purification System shall operate in such a manner so that agglomeration or precipitation of airborne particulate shall not be permitted to collect on occupants, walls, floor or furnishings by virtue of its operation.

C. Air Exchange Rate: Air exchange rates may vary through the full operating range of a VAV system. The quantity of air exchange shall not be increased due to requirements of the air purification system.

D. Velocity Profile: The air velocity through the plenum approaching the air purification system shall not exceed 1,000 fpm (5 m/s).

E. Humidity: Electrodes or gas phase filters shall not require preheat protection when the relative humidity of the entering air exceeds 85%. Relative humidity from 0 - 99% shall not cause damage, deterioration or dangerous conditions within the air purification system.

F. Ozone Generation: The operation of the electrodes unit shall conform to ASHRAE Standard 62-01 and CFR 39-75 with respect to ozone generation.

1.7 EQUIPMENT REQUIREMENTS

A. A schematic representation of the air purification system is indicated on the drawings. Each unit shall include mounting rack, electrodes, generator, safety switches, prefilters, primary filters, differential pressure gauge and accessories.

B. Electrode: Each unit shall include the required number of electrodes and power generators sized to the air handling unit capacity. Electrical power to the electrodes shall be interrupted when the airflow is less than 100 fpm or when access doors to the electrode plenum section are opened.

C. Plenum Specifications: Housings shall be of (horizontal / vertical) design with (single / double) wall construction. Refer to air handling unit specification for construction details.

D. Filter Gages: Differential pressure gages shall be provided to indicate filter status.

1.8 FILTRATION REQUIREMENTS

A. Provide particulate and gas phase filtration equipment in order to achieve the performance detailed within the IAQ Model described in paragraph 1.5 D. Performance of fibrous filters shall conform to ASHRAE Standard 52.2 unless specified otherwise. Provide a fully assembled and tested system from a single manufacturer.

1.9 ELECTRICAL REQUIREMENTS

A. Wiring, conduit and junction boxes shall be installed within housing plenums in accordance with NEC NFPA 70. Electrical service shall be 115/208/230 volts, 1 phase, 50/60 Hz. In the event line voltage varies 10% or greater from nominal or when electrical spikes or transients are present power conditioning shall be provided.

1.10 ASSEMBLY AND ERECTION

A. Assemble mounting racks within the air handling unit in accordance with manufacturer's recommendations and instructions.

B. The air purification system manufacturer shall complete all interconnecting control and power wiring. The electrical contractor shall complete single point power connections.

C. All equipment shall be assembled and installed in a workman like manner to the satisfaction of the owner, architect, and consulting engineer.

D. Any material damaged by water or moisture shall be replaced at no cost to the owner.

E. All equipment shall be protected from dust and damage on a daily basis throughout construction.

F. Clean all components prior to commissioning.

1.11 TESTING

A. Provide the manufacturer's recommended electrical and static pressure tests.

1.12 COMMISSIONING & TRAINING

A. A manufacturer's authorized representative shall provide start-up supervision and training of owner's personnel in the proper operation and maintenance of all equipment.

B. Service

1. A manufacturer's authorized service representative shall provide service support to insure satisfactory air purification system operation. The service program shall include at minimum, regular site visits, inspection of the air purification system and air handling unit, monitoring and validation, inspection of protected areas and the submission of a written report to the owner.
   a. Submit the Manufacturer’s Service Program with the shop drawing submittal.
2. Provide one (1) year Factory Follow-up Service including repairs to the gas phase equipment, replacement of electrodes or removal of disposable modules, installation of new modules with fresh media, administration of hauling and disposal of spent media modules through the owner’s normal channel of disposal and hauling.

3. Validate performance of the Air Purification System through accepted test procedures and independent testing.
4. Particulate filters are not covered by this service agreement and remain the responsibility of the Owner.

1.13 WARRANTY

A. The equipment shall be warranted against defects in material and workmanship for a period of 12 months from commissioning and acceptance.

END OF SECTION

SECTION 235100

BREECHING, CHIMNEYS, AND STACKS

GENERAL GUIDELINES

1.1 SECTION INCLUDES

A. Qualitative requirements for venting for fuel burning equipment.

1.2 SUBMITTALS

A. Submittals are required and shall include product data noting materials, sizes, and dimensions. Detailed shop drawings denoting layouts, specific to project for each vent is required.

1.3 QUALITY ASSURANCE

A. Products and installation shall be in accordance with NFPA 211 and UL Listed.

B. Each vent section/fitting shall be labeled for UL compliance.

C. Installation shall be in conformance with OBC.

1.4 COMPONENTS

A. Type B Gas Vents
1. Round double-wall, with aluminized steel inner pipe and galvanized-steel outer pipe. Use for negative pressure venting systems

B. Steel, Positive-Pressure, Double-Wall Vents
1. Construction: Inner and outer shells separated by at least 1-inch air space, with positive sealing joints. The inner piping shall be stainless steel. The outer piping shall be aluminized steel construction. Use for all positive pressure systems including forced draft boilers and water heaters.

C. Rain cap shall be of galvanized steel construction and attached firmly to stack top.

D. Roof penetrations shall include an insulating thimble complete with proper flashing.

E. Cleanouts shall be provided at all changes in direction.

1.5 INSTALLATION

A. Provide independent or combined flues for each piece of gas burning equipment directly to the outside of the building.

B. Each flue shall be support from the building structure, not from or on the equipment.

END OF SECTION

SECTION 235213

ELECTRIC BOILERS

GENERAL GUIDELINES

1.1 SECTION INCLUDES

A. Qualitative requirements for electric resistance boilers.

1.2 SUBMITTALS

A. Submittals are required and shall include product data noting materials, sizes, capacity, accessories, and dimensions.

1.3 QUALITY ASSURANCE

A. Unit shall be constructed in accordance with ASME Boiler and Pressure Vessel Code Section VIII.

B. UL Listed.

C. Constructed in accordance to the National Electric Code.

D. Controls wired in accordance to ANSI/UL 834.

E. Boiler shall have a minimum thermal efficiency of 95 percent.

1.4 COMPONENTS

A. Pressure vessel: Constructed of carbon steel with ASME stamp.

B. Pressure Rating: 60 psig, water.

C. Heavy-steel mounting base frame.

D. Removable access panels and doors for inspection and cleaning.

E. Insulation and jacket.

F. Hot-Water Boiler Trim:
1. Safety-Relief Valves: ASME rated.
2. Water Connections: Internal thermal circulation to mix return water with boiler water.
3. Dip tube.
4. Low-water cutoff.
5. Pressure and temperature gauges.
6. Temperature controls.
7. Boiler high-pressure-limit controller.

G. Heating Elements:
   1. Replaceable sheathed heating elements.
   2. Minimum 75 watts/sq. in. heat transfer.
   3. Wire with UL Listed conductors.

H. Power Panel:
   1. NEMA 1 enclosure with hinged door and key-locking handle.
   2. Mechanical lugs bolted to copper bus bars.
   3. NEMA Class J or K5 dual-element fuses.
   4. 3-pole magnetic contactors.
   5. Fused disconnect switch.

1.5 INSTALLATION

A. Install boilers and accessories in accordance with manufacturers requirements.

B. Startup shall be by a factory trained technician.

C. Set boilers on four inches thick reinforced concrete pad.

D. Boil out all boilers per the manufacturer's recommendations before using the boilers to heat the building in a temporary or permanent basis. The water shall be tested by the chemical treatment subcontractor for acceptability. The heating water system shall have the proper water treatment chemicals installed immediately after the system has been flushed, boiled-out and refilled and before the system is used for temporary or permanent heating of the building.

END OF SECTION

SECTION 235216

FLUE GAS CONDENSING BOILERS

GENERAL GUIDELINES

1.1 SECTION INCLUDES

A. Qualitative requirements for flue gas condensing boilers.

B. Qualitative requirements for gas fired, oil fired, or combination gas/oil burners.

1.2 SUBMITTALS

A. Submittals are required and shall include product data noting materials, sizes, capacities, accessories, and dimensions.

1.3 QUALITY ASSURANCE

A. Gas trains shall comply with requirements of CSD-1.

B. Boilers shall be National Board listed.

C. Boiler shall have a minimum thermal efficiency of 88 percent at 120 degree Fahrenheit return water temperature.

D. All three-phase motors shall be protected with phase loss protection. Protection shall be provided by the electrical system, by built-in protection, or by protection built into a variable frequency drive.

E. Units must meet minimum efficiency requirements of ASHRAE Standard 90.1.

1.4 COMPONENTS

A. Heat Exchangers:
   1. Fire tube design that is self-supporting, baffle-free, and warranted to withstand thermal shock.
   2. Copper***, stainless steel, aluminum alloy, or cast iron*** finned tube design, gasket-free, and warranted to withstand thermal shock.

B. Pressure Rating: 160 psig, water.

C. Exhaust manifold shall include condensate drain.

D. Exhaust manifold shall be corrosion-resistant porcelain enameled cast iron or other corrosion resistant material.

E. Exhaust gas vent.

F. Insulation and jacket.

G. Hot Water Boiler Trim:
1. Safety-Relief Valves: ASME rated.
2. Low-water cutoff.
3. Pressure and temperature gauges.
4. Temperature controls.
5. Boiler high-pressure-limit controller.

H. Gas Burners: Power burner forced draft design.
1. Fuel: [Natural gas] [Propane gas].
2. Gas-pressure regulator.
3. Gas valves.
4. Manual shutoff.
5. Thermistor flame-sensing device.
6. Automatic 100 percent safety gas shutoff.
7. Burner Firing: Modulating.
8. Burner Ignition: Standing pilot or spark ignition.
9. Safety controls.
10. Flue-Gas Collector: Integral with boiler casing.
11. Gas Piping Train: Factory Mutual approved.

I. Factory-mounted control panel.
1. Dry contacts for DDC signal.
2. Alarm contacts for flame failure, low water cutoff, low temperature and high temperature alarms.

J. Motors: NEMA MG 1, general purpose, continuous duty, Design B, open-drip-proof type.

1.5 INSTALLATION

A. Set boilers on minimum 3-1/2 inch thick reinforced concrete pad.

B. Provide dual wall independent flues for each boiler.

C. Pipe all gas pressure regulator vents to the outside of the building

D. Boil out all boilers per the manufacturer's recommendations before using the boilers to heat the building in a temporary or permanent basis. The water shall be tested by the chemical treatment subcontractor for acceptability. The heating water system shall have the proper water treatment chemicals installed immediately after the system has been flushed, boiled-out and refilled and before the system is used for temporary or permanent heating of the building.

E. Combustion air shall be directly connected or the boiler controls shall be interlocked with the combustion air system to operate the combustion air make-up system when the boiler is firing. The boiler shall not operate without the combustion make-up air system operating.

END OF SECTION

SECTION 235223

CAST IRON BOILERS

GENERAL GUIDELINES

1.1 SECTION INCLUDES

A. Qualitative requirements for cast iron boilers.

B. Qualitative requirements for gas fired, oil fired, or combination gas/oil burners, power or atmospheric.

1.2 SUBMITTALS

A. Submittals are required and shall include product data noting materials, sizes, capacity, accessories, and dimensions.

1.3 QUALITY ASSURANCE

A. Unit shall be constructed in accordance with the ASME Boiler and Pressure Vessel Code Section IV and shall be National Board listed.

B. Gas trains shall comply with requirements of CSD-1.

C. Boilers shall be UL 795 Listed.

D. Boiler shall have a minimum thermal efficiency of 80 percent.

E. All three-phase motors shall be protected with phase loss protection. Protection shall be provided by the electrical system, by built-in protection, or by protection built into a variable frequency drive.

F. Units must meet minimum efficiency requirements of ASHRAE Standard 90.1.

1.4 COMPONENTS

A. Heat Exchangers: Cast iron sectional bolted together.
B. Pressure Rating: 60 psig, water.
C. Heavy-steel mounting base frame.
D. Removable access panels and doors for inspection and cleaning.
E. Observation ports.
F. Exhaust gas vent.
G. Insulation and jacket.
H. Hot Water Boiler Trim:
   1. Safety-Relief Valves: ASME rated.
   2. Dip tube.
   3. Low-water cutoff and auxiliary low-water cutoff.
   4. Pressure and temperature gauges.
   5. Temperature controls.
   6. Boiler high-pressure-limit controller.

I. Gas Burners: Power burner, forced draft design.
   1. Fuel: [Natural gas] [Propane gas].
   2. Gas-pressure regulator.
   3. Gas valves.
   4. Manual shutoff.
   5. Thermistor flame-sensing device.
   6. Automatic 100 percent safety gas shutoff.
   7. Burner Firing: Modulating.
   8. Burner Ignition: Standing pilot
   9. Safety controls.
   10. Flue-Gas Collector and Draft Hood: Integral with boiler casing.
   11. Gas Piping Train: Factory Mutual approved.

J. Oil Burners: Pressure-atomizing type.
   1. Fuel: No. 2 fuel oil.
   2. Operation and combustion-air controls.
   3. Oil pump.
   4. Oil-piping train.

K. Combination Gas/Oil Burners: Power burner, forced draft design with pressure-atomizing burner.
   1. Fuel: [Natural gas] [Propane gas] and No. 2 fuel oil.
   2. Burner operation and combustion-air controls.
   3. Gas pilot.
   4. Gas piping train.
   5. Oil pump.
   6. Oil-piping train.

L. Gas Burners: Atmospheric Design
   1. Tubular alloy steel burners with natural draft.
   2. Electronic pilot and burner ignition.
   3. Gas pressure regulator.
   4. Gas valves.
   5. Manual shutoffs
   6. Automatic 100 percent safety gas shutoff.
   7. Safety controls.
   8. Flue-gas collector and draft hood.
   9. Factory Mutual approved gas train.

M. Factory-mounted control panel.
   1. Dry contacts for DDC signal.
   2. Alarm contacts for low water cutoff, low temperature and high temperature alarms.

N. Motors: NEMA MG 1, general purpose, continuous duty, Design B, open-drip-proof type.

1.5 INSTALLATION

A. Set boilers on minimum 3-1/2 inch thick reinforced concrete pad.

B. Provide dual wall independent flues for each boiler.

C. Pipe all gas pressure regulator vents to the outside of the building

D. Boil out all boilers per the manufacturer's recommendations before using the boilers to heat the building in a temporary or permanent basis. The water shall be tested by the chemical treatment subcontractor for acceptability. The heating water system shall have the proper water treatment chemicals installed immediately after the system has been flushed, boiled-out and refilled and before the system is used for temporary or permanent heating of the building.

E. The boiler controls shall be interlocked with the combustion air system to operate the combustion air make-up system when the boiler is firing. The boiler shall not operate without the combustion make-up air system operating.

END OF SECTION

SECTION 235225

STEEL FIREBOX BOILERS

GENERAL

1.01 SECTION INCLUDES

A. Qualitative requirements for steel firebox boilers.

B. Qualitative requirements for gas fired, oil fired, or combination gas/oil burners.

1.02 SUBMITTALS

A. Submittals are required and shall include product data noting materials, sizes, capacities, accessories, and dimensions.

1.03 QUALITY ASSURANCE

A. Gas trains shall comply with requirements of CSD-1.

B. Units shall be constructed in accordance with the ASME Pressure Vessel Code Section IV and shall be National Board listed.

C. Boiler shall have a minimum thermal efficiency of 80 percent.

D. All three-phase motors shall be protected with phase loss protection. Protection shall be provided by the electrical system, by built-in protection, or by protection built into a variable frequency drive.

E. Units must meet minimum efficiency requirements of ASHRAE Standard 90.1.

2.01 COMPONENTS

A. Heat Exchangers: 3 pass fire tube wet-back design with large fire box. 5 square feet of heating surface per boiler horsepower.

B. Pressure Rating: 60 psig, water.

C. Heavy-steel mounting base frame.

D. Removable access panels and doors for inspection and cleaning.

E. Observation ports.

F. Exhaust gas vent.

G. Insulation and jacket.

H. Hot Water Boiler Trim:
   1. Safety-Relief Valves: ASME rated.
   2. Water Connections: Internal thermal circulation to mix return water with boiler water.
   3. Dip tube.
   4. Low-water cutoff.
   5. Pressure and temperature gauges.
   6. Temperature controls.
   7. Boiler high-pressure-limit controller.

I. Gas Burners: Power burner forced draft design.
   1. Fuel: [Natural gas] [Propane gas].
   2. Gas-pressure regulator.
   3. Gas valves.
   4. Manual shutoff.
   5. Thermistor flame-sensing device.
   6. Automatic 100 percent safety gas shutoff.
   7. Burner Firing: Modulating.
   8. Burner Ignition: Standing pilot
   9. Safety controls.
   10. Flue-Gas Collector: Integral with boiler casing.
   11. Gas Piping Train: Factory Mutual approved.

J. Oil Burners: Pressure-atomizing type.
   1. Fuel: No. 2 fuel oil.
   2. Operation and combustion-air controls.
   3. Oil pump.
   4. Oil-piping train.

K. Combination Gas/Oil Burners: Pressure-atomizing type.
   1. Fuel: [Natural gas] [Propane gas] and No. 2 fuel oil.
   2. Burner operation and combustion-air controls.
   3. Gas pilot.
   4. Gas piping train.
   5. Oil pump.
   6. Oil-piping train.

L. Factory-mounted control panel.
   1. Dry contacts for DDC signal.
   2. Alarm contacts for low water cutoff, low temperature and high temperature alarms.

M. Motors: NEMA MG 1, general purpose, continuous duty, Design B, open-drip-proof type.

3.01 INSTALLATION

A. Set boilers on minimum 3-1/2 inch thick reinforced concrete pad.

B. Provide dual wall independent flues for each boiler.

C. Pipe all gas pressure regulator vents to the outside of the building

D. Boil out all boilers per the manufacturer's recommendations before using the boilers to heat the building in a temporary or permanent basis. The water shall be tested by the chemical treatment subcontractor for acceptability. The heating water system shall have the proper water treatment chemicals installed immediately after the system has been flushed, boiled-out and refilled and before the system is used for temporary or permanent heating of the building.

E. The boiler controls shall be interlocked with the combustion air system to operate the combustion air make-up system when the boiler is firing. The boiler shall not operate without the combustion make-up air system operating.

END OF SECTION

SECTION 235233

FLEXIBLE WATER TUBE BOILERS

GENERAL GUIDELINES

1.1 SECTION INCLUDES

A. Qualitative requirements for flexible steel water tube boilers

B. Qualitative requirements for gas fired, oil fired, or combination gas/oil fired burners, power or atmospheric.

1.2 SUBMITTALS

A. Submittals are required and shall include product data noting materials, sizes, capacity, accessories, and dimensions.

1.3 QUALITY ASSURANCE

A. Unit shall be constructed in accordance with the ASME Boiler and Pressure Vessel Code Section IV and shall be National Board listed.

B. Gas trains shall comply with requirements of CSD-1.

C. Boiler shall be UL 795 listed.

D. Boiler shall have a minimum thermal efficiency of 80 percent.

E. All three-phase motors shall be protected with phase loss protection. Protection shall be provided by the electrical system, by built-in protection, or by protection built into a variable frequency drive.

F. Units must meet minimum efficiency requirements of ASHRAE Standard 90.1.

1.4 COMPONENTS

A. Heat Exchangers: Flexible bent steel tubes wedged into steel headers
B. Pressure Rating: 160 psig, water.
C. Heavy-steel mounting base frame.
D. Removable access panels and doors for inspection and cleaning.
E. Observation ports.
F. Exhaust gas vent.
G. Insulation and jacket.
H. Hot Water Boiler Trim:
   1. Safety-Relief Valves: ASME rated.
   2. Water Connections: Internal thermal circulation to mix return water with boiler water.
   3. Dip tube.
   4. Low-water cutoff and auxiliary low water cutoff.
   5. Pressure and temperature gauges.
   6. Temperature controls.
   7. Boiler high-pressure-limit controller.

I. Gas Burners: Power burner, forced draft design.
   1. Fuel: [Natural gas] [Propane gas].
   2. Gas-pressure regulator.
   3. Gas valves.
   4. Manual shutoff.
   5. Thermistor flame-sensing device.
   6. Automatic 100 percent safety gas shutoff.
   7. Burner Firing: Modulating.
   8. Burner Ignition: Standing pilot
   9. Safety controls.
   10. Flue-Gas Collector and Draft Hood: Integral with boiler casing.
   11. Gas Piping Train: Factory Mutual approved.

J. Oil Burners: Pressure-atomizing type.
   1. Fuel: No. 2 fuel oil.
   2. Operation and combustion-air controls.
   3. Oil pump.
   4. Oil-piping train.

K. Combination Gas/Oil Burners: Power burner, forced draft design with pressure-atomizing oil burner.
   1. Fuel: [Natural gas] [Propane gas] and No. 2 fuel oil.
   2. Burner operation and combustion-air controls.
   3. Gas pilot.
   4. Gas piping train.
   5. Oil pump.
   6. Oil-piping train.

L. Gas Burners: Atmospheric Design
   1. Tubular alloy steel burners with natural draft.
   2. Electric pilot ignition.
   3. Gas pressure regulator.
   4. Gas valves.
   5. Manual shutoffs
   6. Automatic 100 percent safety gas shutoff.
   7. Safety controls.
   8. Flue-gas collector and draft hood.
   9. Factory Mutual approved gas train.

M. Factory-mounted control panel.
   1. Dry contacts for DDC signal.
   2. Alarm contacts for low water cutoff, low temperature and high temperature alarms.

N. Motors: NEMA MG 1, general purpose, continuous duty, Design B, open-drip-proof type.

1.5 INSTALLATION

A. Set boilers on minimum 3-1/2 inch thick reinforced concrete pad.

B. Provide dual wall independent flues for each boiler.

C. Pipe all gas pressure regulator vents to the outside of the building

D. Boil out all boilers per the manufacturer's recommendations before using the boilers to heat the building in a temporary or permanent basis. The water shall be tested by the chemical treatment subcontractor for acceptability. The heating water system shall have the proper water treatment chemicals installed immediately after the system has been flushed, boiled-out and refilled and before the system is used for temporary or permanent heating of the building.

E. The boiler controls shall be interlocked with the combustion air system to operate the combustion air make-up system when the boiler is firing. The boiler shall not operate without the combustion make-up air system operating.

END OF SECTION

SECTION 235239

PACKAGED FIRETUBE BOILERS

GENERAL GUIDELINES

1.1 SECTION INCLUDES

A. Qualitative requirements for package firetube boilers.

B. Qualitative requirements for gas fired, oil fired, or combination gas/oil burners.

1.2 SUBMITTALS

A. Submittals are required and shall include product data noting materials, sizes, capacity, accessories, and dimensions.

1.3 QUALITY ASSURANCE

A. Unit shall be constructed in accordance with ASME Boiler and Pressure Vessel Code Section IV and shall be National Board listed.

B. Gas trains shall comply with Factory Mutual Insurance (FM) requirements.

C. Gas trains shall comply with the requirements of CSD-1.

D. Boiler shall be UL 715 listed.

E. All three-phase motors shall be protected with phase loss protection. Protection shall be provided by the electrical system, by built-in protection, or by protection built into a variable frequency drive.

F. Units must meet minimum efficiency requirements of ASHRAE Standard 90.1.

1.4 COMPONENTS

A. Heat Exchangers: Horizontal- fire tube, multi-pass, dry-back or wet-back design.

B. Pressure Rating: 125 psig, water.

C. Heavy-steel mounting base frame.

D. Removable access panels and doors for inspection and cleaning.

E. Observation ports.

F. Exhaust gas vent.

G. Insulation and jacket.

H. Hot Water Boiler Trim:
1. Safety-Relief Valves: ASME rated.
2. Water Connections: Internal thermal circulation to mix return water with boiler water.
3. Dip tube.
4. Low-water cutoff.
5. Pressure and temperature gauges.
6. Temperature controls.
7. Boiler high-pressure-limit controller.

I. Gas Burners: Power burner, forced draft design.
1. Fuel: [Natural gas] [Propane gas].
2. Gas-pressure regulator.
3. Gas valves.
4. Manual shutoff.
5. Thermistor flame-sensing device.
6. Automatic 100 percent safety gas shutoff.
7. Burner Firing: Modulating.
8. Burner Ignition: Standing pilot
9. Safety controls.
10. Flue-Gas Collector: Integral with boiler casing.
11. Gas Piping Train: Factory Mutual approved.

J. Oil Burners: Pressure-atomizing type.
1. Fuel: No. 2 fuel oil.
2. Operation and combustion-air controls.
3. Oil pump.
4. Oil-piping train.

K. Combination Gas/Oil Burners: Power burner, forced draft design with pressure-atomizing oil burner.
1. Fuel: [Natural gas] [Propane gas] and No. 2 fuel oil.
2. Burner operation and combustion-air controls.
3. Gas pilot.
4. Gas piping train.
5. Oil pump.
6. Oil-piping train.

L. Factory-mounted control panel.
1. Dry contacts for DDC control.
2. Alarm contacts for low water cutoff, low temperature and high temperature cutoffs.

M. Motors: NEMA MG 1, general purpose, continuous duty, Design B, open-drip-proof type.

1.5 INSTALLATION

A. Set boilers on minimum 3-1/2 inch thick reinforced concrete pad.

B. Provide dual wall independent flues for each boiler.

C. Pipe all gas pressure regulator vents to the outside of the building.

D. Boil out all boilers per the manufacturer's recommendations before using the boilers to heat the building in a temporary or permanent basis. The water shall be tested by the chemical treatment subcontractor for acceptability. The heating water system shall have the proper water treatment chemicals installed immediately after the system has been flushed, boiled-out and refilled and before the system is used for temporary or permanent heating of the building.

E. The boiler controls shall be interlocked with the combustion air system to operate the combustion air make-up system when the boiler is firing. The boiler shall not operate without the combustion make-up air system operating.

END OF SECTION

SECTION 235700

HEAT EXCHANGERS

GENERAL GUIDELINES

1.1 SECTION INCLUDES

A. Qualitative requirements for shell and tube design; and plate and frame.

1.2 SUBMITTALS

A. Submittals are required and shall include product data noting capacities at the specified conditions, materials, sizes, and dimensions.

1.3 QUALITY ASSURANCE

A. ASME Boiler and Pressure Vessel Code Section VIII, Division 1.

1.4 WARRANTY

A. Provide 1 year parts and labor warranty.

1.5 COMPONENTS

A. Shell and Tube Exchangers
1. Shell shall be fabricated from steel, the head shall be cast iron.
2. Tube shall be constructed of seamless copper tubing
3. Piping connections shall be flanged or screwed connections.
4. Tube sheets shall be constructed of copper sheets.

B. Plate and Frame Exchangers
1. The plates shall be constructed of type 304 or 316 stainless steel.
2. Gasket material shall be one of the following: Nitrile rubber, EPDM, Butyl or Viton.
3. Piping connections shall be flanged or screwed connections.
4. Unit shall include aluminum shroud.
5. Frame shall be constructed of steel.

1.6 INSTALLATION

A. Install per the manufacturer's recommendations.

B. Provide a safety pressure relief valve on both water sides of each plate and frame heat exchanger. The relief valve shall be properly sized for the system application.

END OF SECTION

SECTION 236213

REFRIGERANT CONDENSING UNITS

GENERAL GUIDELINES

1.1 SECTION INCLUDES

A. Qualitative requirements for air-cooled refrigerant condensing units with single compressors.

1.2 SUBMITTALS

A. Submittals are required and shall include product data noting capacities at the specified conditions, materials, sizes, and dimensions.

1.3 QUALITY ASSURANCE

A. ASHRAE Standard 15.

B. Certified performance to ARI 210/270/340.

C. UL construction.

D. Units must meet minimum efficiency requirements of ASHRAE Standard 90.1.

1.4 WARRANTY

A. Compressors shall include an extended 5 year parts warranty.

1.5 COMPONENTS

A. Air-Cooled Units, single compressor 1 to 10 tons
1. Compressor: Reciprocating or scroll type, hermetically sealed and isolated with single-speed or two-speed motor, crankcase heater, and internal temperature and motor overloads.
2. Condenser: Copper-tube, aluminum-fin coil with integral liquid subcooler.
3. Condenser Fan: Vertical discharge, direct-drive, propeller.
4. Accessories: Suction and liquid line service valves with gauge ports, replaceable core filter driers, sightglass/moisture indicator, thermal expansion valve, automatic reset timer, and relief solder joints.
5. Casing: Heavy-gauge, zinc-coated galvanized steel with baked enamel finish.
6. Provide condenser coil protection.
7. Refrigerant: ***Must comply with the requirements of the U.S. EPA Clean Air Act***
8. Provide all required safeties including: overcurrent, thermal overload, and single-phasing motor protection.

1.6 INSTALLATION

A. Install the unit per the manufacturer's recommendations.

END OF SECTION

SECTION 236215

MULTIPLE-COMPRESSOR REFRIGERANT CONDENSING UNITS

GENERAL GUIDELINES

1.1 SECTION INCLUDES
- A. Qualitative requirements for air-cooled refrigerant condensing units with multiple compressors.

1.2 SUBMITTALS
- A. Submittals are required and shall include product data noting capacities at the specified conditions, materials, sizes, and dimensions.

1.3 QUALITY ASSURANCE
- A. ASHRAE Standard 15.
- B. Certified performance to ARI 340/360.
- C. UL construction.
- D. Units must meet minimum efficiency requirements of ASHRAE Standard 90.1.

1.4 WARRANTY
- A. Compressors shall include an extended 5 year parts warranty.

1.5 COMPONENTS
- A. Air-Cooled Units, multiple compressors
  - ***1.*** Compressor: Rotary screw or scroll type; semi-hermetic for the rotary screw, hermetically sealed for the scroll type. Compressors shall be isolated from the unit frame for vibration control. Compressors shall include crankcase heaters, suction strainer, oil strainer, and oil charging connection. Motors shall have internal thermal protection.
  - 2. Condenser: Copper-tube, aluminum-fin coil with liquid subcooler.
  - 3. Condenser Fans: Minimum one fan per compressor. Vertical discharge, direct-drive, propeller.
  - 4. Accessories: Delay timer, automatic reset timer, suction and liquid line service valves with gauge ports, replacable core filter driers, sightglass/moisture indicator, thermal expansion valve, automatic reset timer, suction accumulator, liquid receiver, and relief solder joints.
  - 5. Casing: Heavy-gauge, zinc-coated galvanized steel with baked enamel finish.
  - 6. Refrigerant: ***Must comply with the requirements of the U.S. EPA Clean Air Act***
  - 7. Provide all required safeties including overcurrent, thermal overload, and single-phasing motor protection.

1.6 INSTALLATION
- A. Install the unit per the manufacturer's recommendations.

END OF SECTION

SECTION 236416

PACKAGED, CENTRIFUGAL WATER CHILLER

GENERAL GUIDELINES

1.1 SECTION INCLUDES

A. Qualitative requirements for packaged centrifugal compressor, water-cooled water chiller.

1.2 SUBMITTALS

A. Submittals are required and shall include product data noting capacities at specified conditions, materials, sizes, and dimensions.

1.3 QUALITY ASSURANCE

A. Capacity certified to ARI 590.

B. Evaporator/condenser shall be constructed to ASME Boiler and Pressure Vessel Code Section VIII.

C. ASHRAE Standard 15 Safety Code for Mechanical Refrigeration.

D. Conformance to ANSI/Ul 465.

E. Units must meet minimum efficiency requirements of ASHRAE Standard 90.1.

1.4 WARRANTY

A. Compressors shall have an extended 5 year parts warranty.

1.5 COMPONENTS

A. Packaged centrifugal compressor water-cooled water chiller:
1. Compressor: Centrifugal design.
2. Refrigerant: ***Must comply with the requirements of the U.S. EPA Clean Air Act.***
3. Cooler: ASME vessel direct expansion, shell and tube design.
4. Condenser: ASME shell and tube vessel.
5. Evaporator shell shall be wrapped with 3/4 inch thick elastomeric foam insulation.
6. Starter: Unit mounted soft start design
7. Control panel: Unit mounted with complete diagnostics, direct digital control.
8. Provide all required safeties including: overcurrent, thermal overload, and single-phasing motor protection.
9. Provide complete charge of the selected refrigerant.
10. Provide with "marine" water boxes for the cooler and condenser piping connections. Option: Detachable piping connections.
11. Provide with safety flow switch for proof of flow.
12. Provide unit with refrigerant purge unit for applicable refrigerant.
13. Provide safety water flow switch.

1.6 INSTALLATION

A. Install per the manufacturer's requirements.

B. Set the chiller on properly sized vibration isolation devices.

C. Install the flow switch in the leaving water piping from the chiller and wire it into the chiller control panel. Chiller shall not start until proof of flow via the flow switch is established.

D. Vent the refrigerant safety relief valve to the outside of the building.

END OF SECTION

SECTION 236423

PACKAGED, SCROLL WATER CHILLER

GENERAL GUIDELINES

1.1 SECTION INCLUDES

A. Qualitative requirements for packaged scroll compressor, air-cooled water chiller.

1.2 SUBMITTALS

A. Submittals are required and shall include product data noting capacities at specified conditions, materials, sizes, and dimensions.

1.3 QUALITY ASSURANCE

A. Capacity certified to ARI 590.

B. Evaporator/condenser shall be constructed to ASME Boiler and Pressure Vessel Code Section VIII.

C. ASHRAE Standard 15 “Safety Code for Mechanical Refrigeration”.

D. Conformance to ANSI/Ul 465.

E. Units must meet minimum efficiency requirements of ASHRAE Standard 90.1.

1.4 WARRANTY

A. Compressors shall have an extended 5 year parts warranty.

1.5 COMPONENTS

A. Packaged air-cooled scroll water chiller:

1. Compressor : Hermetic scroll design.
2. Refrigerant: ***Must comply with the requirements of the U.S. EPA Clean Air Act.***
3. Evaporator: ASME vessel direct expansion, shell and tube design. Provide with thermostatically controlled electric heat tracing.
4. Condenser: Air-cooled condenser coils with integral sub-cooling circuit.
5. Evaporator shell shall be wrapped with 3/4 inch thick elastomeric foam insulation.
6. Starter: Unit mounted soft start design
7. Control panel: Unit mounted with complete diagnostics, direct digital control.
8. Provide all required safeties including: overcurrent, thermal overload, and single-phasing motor protection.
9. Provide complete charge of the selected refrigerant.
10. Provide with integral condenser fans
11. Provide with safety flow switch for proof of flow.
12. Condenser coil protection.
13. Provide with safety water flow switch.

1.6 INSTALLATION

A. Install per the manufacturer's requirements.

B. Set the chiller on properly sized vibration isolation devices.

C. Install the flow switch in the leaving water piping from the chiller and wire it into the chiller control panel. Chiller shall not start until proof of flow via the flow switch is established.

END OF SECTION

SECTION 236426

PACKAGED, ROTARY SCREW WATER CHILLER

GENERAL GUIDELINES

1.1 SECTION INCLUDES

A. Qualitative requirements for packaged rotary screw air-cooled or water-cooled, water chiller.

1.2 SUBMITTALS

A. Submittals are required and shall include product data noting capacities at specified conditions, materials, sizes, and dimensions.

1.3 QUALITY ASSURANCE

A. Capacity certified ARI 590.

B. Evaporated/condenser shall be constructed to ASME Boiler and Pressure Vessel Code Section VIII.

C. ASHRAE Standard 15 Safety Code for Mechanical Refrigeration.

D. Conformance to ANSI/UL 465.

E. Units must meet the minimum efficiency requirements of ASHRAE Standard 90.1.

1.4 WARRANTY

A. Compressors shall have an extended 5 year parts warranty.

1.5 COMPONENTS

A. Water-cooled and air-cooled helical rotary screw chiller:

1. Compressor: Semi-hermetic helical rotary screw design with double wall construction for sound attenuation.
2. Refrigerant: ***Must comply with the requirements of the U.S. EPA Clean Air Act***
3. Cooler: ASME vessel direct expansion, shell and tube design. Provide thermostatically controlled electric heat tracing for exterior air-cooled chillers.
4. Condenser: ASME vessel, shell and tube design for water-cooled design.
5. Evaporator shell shall be wrapped with 3/4 inch thick elastomeric foam insulation.
6. Starter: Unit mounted soft start design
7. Control panel: Unit mounted with complete diagnostics, direct digital control.
8. Provide all required safeties including: overcurrent, thermal overload, and single-phasing motor protection.
9. Provide with "marine" water boxes for the cooler and condenser piping connections for water-cooled design.
10. Provide complete charge of the select refrigerant.
11. Provide integral multiple compressor fans for air-cooled design.
12. Provide condenser coil protection on outdoor air-cooled units.
13. Provide with water flow switch.

1.6 INSTALLATION

A. Install per the manufacturer's requirements.

B. Minimize the number of daily starts as recommended by the manufacturer.

C. Vent the refrigerant safety relief valve to the outside of the building.

D. Set the chiller on properly sized vibration isolation devices.

E. Mount the safety flow switch in the chilled water supply piping. Wire the flow switch to the chiller control panel. Chiller shall not start until proof of flow via the flow switch is established.

END OF SECTION

SECTION 236440

REFRIGERANT MONITORING SYSTEMS

GENERAL GUIDELINES

1.1 SECTION INCLUDES

A. Qualitative requirements for refrigerant monitoring equipment and breathing apparatus.

1.2 SUBMITTALS

A. Submittals are required and shall include product data noting materials, sizes, and dimensions.

1.3 QUALITY ASSURANCE

A. Products and installation shall comply with requirements of ASHRAE Standard 15.

1.4 COMPONENTS

A. Gas Detection System

1. ***System shall be capable of detecting presence of any HCFC, CFC, or HFC refrigerant.*** Provide the appropriate sensors for the refrigerant being used.
2. The system shall indicate alarm and shut down the refrigeration equipment and start the refrigerant ventilation fan system.
3. Oxygen deprivation monitoring shall not be used in lieu of TLV-TWA monitoring for human safety exposure.
4. Sequential sampling and multi-point monitoring shall be required as defined in the latest issue of ASHRAE Standard 15.
5. The analyzer shall be microprocessor based and employ infrared (IR) sensor technology and shall accurately provide sensing down to 1 part per million.
6. Unit shall be factory calibrated for the refrigerant and sensors.
7. Sensors shall be capable of being installed up to 500 feet from the microprocessor.

B. Breathing Apparatus

1. Self-contained with 30 minutes of air. Provide with full face mask, breathing tube, air tank, controls and harness. Provide with wall mounted storage cabinet.

1.5 INSTALLATION

A. Provide refrigerant monitoring/alarm system for refrigeration equipment located inside the building.

B. The monitoring system shall shut-down all refrigeration equipment in the room, start the refrigerant emergency exhaust system, and sound the alarm.

C. Locate the breathing apparatus in a protective wall mounted enclosure immediately outside of the refrigeration room.

D. Mount and wire the remote audible alarms inside the room containing the refrigeration equipment and immediately outside of the refrigeration room.

END OF SECTION

SECTION 236500

PACKAGED COOLING TOWERS

GENERAL GUIDELINES

1.1 SECTION INCLUDES

A. Qualitative requirements for induced draft cross-flow package cooling towers, and forced-draft, counter-flow packaged cooling towers.

1.2 SUBMITTALS

A. Submittals are required and shall include product data noting capacities at the specified conditions, materials, sizes, and dimensions.

1.3 QUALITY ASSURANCE

A. Certified for thermal performance to CTI 201.

B. ASTM E84 for burning characteristics of building materials.

C. All three-phase motors shall be protected with phase loss protection. Protection shall be provided by the electrical system, by built-in protection, or by protection built into a variable frequency drive.

D. Units must meet minimum efficiency requirements of ASHRAE Standard 90.1.

1.4 COMPONENTS

A. Induced-Draft, Cross-Flow Cooling Towers
1. Fan Type: Propeller with cast-aluminum, fixed-pitch or galvanized-steel, fixed-pitch blades.
2 Fan Drive: Gear, with speed reducer or belt drive.
3 Fan Motor: Two-speed or suitable for variable-frequency drive control, totally enclosed, fan-cooled.
4. Fan-vibration cutoff switch.
5. Hot-water distribution system.
6. Hot-Water Basin Control Valves: Globe.
7 Casing: Galvanized steel with polymer coating or stainless steel.
8. Collecting Basin: Galvanized steel with polymer coating or stainless steel.
9. Fill Material: Formed PVC or CPVC.
10. Drift Eliminator Material: Formed PVC.
11. Louver Material: Galvanized steel with polymer coating.
12. Water Level Control: Electric float switch with solenoid make-up valve.
13. Basin Heaters: Electric immersion sized to maintain a minimum 40 degree F pan water temperature.
14. Handrails, Ladders, and Safety Cage: Galvanized steel pipe.
15. Vibration Controls: Manufacturer recommended. Rubber and glass-fiber pad isolators.
16. Basin drain connection and overflow connections.
17. Anti-vortex suction diffuser/screen constructed of stainless steel.

B. Forced-Draft, Counter-Flow Cooling Towers
1. Fan Type: Propeller with cast-aluminum, fixed-pitch or galvanized steel, fixed-pitch blades. Centrifugal forward curved fans are also acceptable.
2. Fan Drive: Gear, with speed reducer or belt drive.
3. Fan Motor: Two speed or suitable for variable frequency drive control, totally enclosed, fan cooled.
4. Fan vibration cutoff switch.
5. Hot water distribution system.
6. Hot Water Basin Control Valves: Globe.
7. Casing: Galvanized steel with polymer coating or stainless steel.
8. Collecting Basin: Galvanized steel with polymer coating or stainless steel.
9. Fill Material: Formed PVC or CPVC.
10. Drift Eliminator Material: Formed PVC.
11. Louver Material: Galvanized steel with polymer coating.
12. Water Level Control: Electric float switch with solenoid makeup valve.
13. Basin Heaters: Electric immersion sized to maintain a minimum 40 degree F pan water temperature.
14. Handrails, Ladders, and Safety Cage: Galvanized steel pipe.
15. Vibration Controls: Manufacturer recommended. Rubber and glass fiber pad isolators.
16. Basin drain connection and overflow connections.
17. Anti-vortex suction diffuser/screen constructed of stainless steel.

1.5 INSTALLATION

A. Install cooling towers to conform with the manufacturer's requirements

END OF SECTION

SECTION 236533

CLOSED CIRCUIT FLUID COOLERS

GENERAL GUIDELINES

1.1 SECTION INCLUDES

A. Qualitative requirements for closed-circuit evaporative fluid coolers.

1.2 SUBMITTALS

A. Provide submittals indicating capacity at the specified conditions, electrical requirements, construction material, and dimensions.

1.3 QUALITY ASSURANCE

A. Units must meet minimum efficiency requirements of ASHRAE Standard 90.1.

1.4 COMPONENTS

A. Coil: Continuous serpentine, cleanable, galvanized tubes with removable cover plates on headers.

B. Drift Eliminator Material: Hot-dip galvanized steel with polymer coating.

C. Hot Water Distribution System: Schedule 40 PVC with removable branch pipes.

D. Inlet Screens: Galvanized steel mesh with polymer coating mounted on removable frame.

E. Basin Heaters: Electric.

F. Circulating Pumps: Centrifugal, closed-coupled, bronze fitted with mechanical seals.

G. Water Level Control: Electric float switch with solenoid makeup valve.

H. Fan: Centrifugal
   1. Drive: Belt.
   2. Motor: Totally enclosed, fan-cooled energy-efficient type.
   3. Motor Speed: Single speed.
   4. All three-phase motors shall be protected with phase loss protection. Protection shall be provided by the electrical system, by built-in protection, or by protection built into a variable frequency drive.

I. Vibration cutout switch.

J. Discharge dampers, inlet dampers, and controls.

K. Casing Material: Galvanized steel with polymer coating or stainless steel.

L. Collecting Basin: Galvanized steel with polymer coating or stainless steel.

M. Vibration Controls: Manufacturer's recommended rubber and glass-fiber pads or restrained spring isolators.

1.5 INSTALLATION

A. Mount fluid cooler on vibration isolators.

B. Provide open circuit cooling tower chemical water treatment for control of scale, corrosion, and biological growth.

END OF SECTION

SECTION 237119

ICE STORAGE SYSTEM

GENERAL GUIDELINES

1.1 SECTION INCLUDES

A. Qualitative requirements for ice storage tanks.

1.2 SUBMITTALS

A. Submittals are required and shall include product data noting capacities at the specified conditions, materials, sizes, and dimensions.

1.3 QUALITY ASSURANCE

A. Unit controls shall be UL or ETL listed and labeled.

1.4 COMPONENTS

A. Thermal ice storage tanks shall be constructed of galvanized steel or polyethylene.

B. Heat exchangers shall be constructed of polyolefin, polyethylene or galvanized steel.

C. The bottom, sides, and cover(s) of each ice storage tank shall be factory insulated to ensure standby losses do not exceed one percent of system capacity in 24 hours.

D. Ice storage tanks that are to be buried shall be specifically designed for burial.

E. An ice inventory measuring device shall be provided to interface with the HVAC Direct Digital Controls system.

1.5 Install per manufacturer's requirements.

1.6 Manufacturer shall check-test-start units.

END OF SECTION

SECTION 237200

AIR TO AIR ENERGY RECOVERY EQUIPMENT

GENERAL GUIDELINES

1.1 SECTION INCLUDES

A. Qualitative requirements for total energy heat recovery wheels and energy recovery modules.

1.2 SUBMITTALS

A. Submittals are required and shall include product data noting capacities at the specified conditions, materials, sizes, and dimensions.

1.3 QUALITY ASSURANCE

A. Recovery performance shall be tested in accordance with ASHRAE Standard 84.

B. Units shall bear the ETL label and shall be ETL certified.

C. Recovery performance at specified conditions shall be guaranteed by the manufacturer.

1.4 COMPONENTS

A. Energy Recovery Wheel
1. The energy recovery wheel shall have a minimum heating and total cooling effectiveness of 80%, based on balanced airflow (relief airflow matching outside airflow). The effectiveness of this wheel shall not be below 70% under design airflow conditions.
2. The unit shall be constructed of structural steel tubular frame with epoxy primer and finish. The cabinet shall be of 16 gauge bright galvanized steel construction.
3. The heat wheel transfer media shall be a coated aluminum or polymer media with air permeable matrix with laminar flow flutes coated with a renewable desiccant. The heat wheel media shall be driven by an electric motor.
4. The face velocity across each side of the media (supply and exhaust) shall be less than 800 FPM and more than 350 FPM with a purge method that prevents exhaust air from being recirculated.
5. Each unit shall include a frost control method. The control of the unit shall be provided by the DDC control system.

B. Energy Recovery Module
(This type of energy recovery does not meet the prescriptive path requirements of the energy code. If this type is to be used, compliance with the energy cost-budget method must be demonstrated – ASHRAE 90.1 ***(most recent as adopted by OBC or USGBC.)***)
1. The energy recovery module shall have a heating net total effectiveness of 62% and a cooling net total effectiveness of 41%.
2. The module shall be constructed of 16 gauge galvanized steel with epoxy primer. Access doors shall have gasket, hinge, and door latches to provide a

tight seal.

3. The fixed plate exchange module shall be fixed plate cross-flow construction. Water vapor transfer shall be through molecular transport by hydroscopic resin.

C. Furnish a digital display for readout of both air stream temperatures and control settings.

D. Provide filter racks and filters with a minimum MERV rating of 7 on both entering air sides of the wheel or energy recovery module.

E. Each unit shall include a frost control method. The control for the unit shall be provided through the building DDC control system.

1.5 INSTALLATION

A. Install per manufacturers requirements.

B. Manufacturer shall test-check-start units.

END OF SECTION

SECTION 237313

MODULAR INDOOR AIR HANDLING UNITS

GENERAL GUIDELINES

1.1 SECTION INCLUDES

A. Qualitative requirements for central station modular air handling units including fan sections hot water heating coils, chilled water cooling coils, filter sections, mixing boxes, face and bypass dampers, access modules, and other such equipment and accessories.

1.2 SUBMITTALS

A. Submittals are required and shall include product data noting the following:
1. Product data indicating dimensions, weights, capacities, and materials.
2. Fan performances including curves.
3. Sound power levels.
4. Filter data, mounting method, and performance.

1.3 QUALITY ASSURANCE

A. Construction standard shall meet NFPA 90A.

B. Product certification shall comply with ARI 430.

C. Sound power level rating shall comply with AMCA 300, ASHRAE 68, and AMCA 301.

D. Fan performance rating shall comply with AMCA 210.

E. Damper leakage rating shall comply with AMCA 500.

F. Coil performance shall comply with ARI 410.

G. Safety code for mechanical refrigeration shall comply with ASHRAE 15.

H. Filtration shall comply with ASHRAE 52.

1.4 COMPONENTS

A. Unit Casing
1. Galvanized steel framing on channel base with welding construction.
2. Zinc coated steel with primer coat and final finish of protective enamel.
3. Dual wall construction throughout.
4. 2 inch thick insulation with minimum R-value of R-8.3 ft^2●h●°F/Btu.
5. Double wall, stainless steel drain pan, insulated and sloped to assure drainage.
6. ***Access doors shall be 2" thick dual wall construction with hinge and door latches to provide a tight seal. Bolted doors are not acceptable.***

B. Water Coils
1. Common or individual with minimum 16 gauge galvanized steel casings and intermediate supports for lengths over 60 inches.
2. Constructed of seamless copper tubes with aluminum plate fins, cast iron or copper headers, with connections for drain valve and air vent.
3. Drainable serpentine type.
4. Tested at 300 psi under water.

5. Dual wall, insulated, stainless steel drain pan of IAQ design under all cooling coils.

C. DX Refrigerant Coils
1. Constructed of seamless copper tubes with aluminum plate fins,
2. Seamless copper suction header and distributor tube with low pressure drop distributors.
3. Multi-circuited, fully intertwined, staggered row for full face cooling at variable air flows.
4. Tested at 400 psi under water.

D. Face and Bypass Dampers
1. Dampers shall be opposed acting, with break-formed dampers having gaskets and edge seals.

E. Access Section
1. Section shall include an access door.
2. Access sections shall be placed between coil sections to allow access for cleaning and repair.

F. Mixing Box
1. Section shall be provided with return air and economizer air connections.
2. Dampers shall be provided and installed by the Temperature Control Contractor.

G. Fans
1. Fan type shall be (airfoil) (backward inclined) (forward curved) type.
   a. Double width, double inlet multi-blade fan wheel.
   b. Self aligning, grease lubricated ball bearings with lubrication fittings
   c. Fan and motor assembly internally isolated from unit casing.
2. Fan type shall be plug type.
   a. Single width, single inlet, multi-blade fan wheel.
   b. Self aligning, anti-friction pillow block bearings.
   c. Fan and motor assembly internally isolated including spring-supported inertia pad.
3. Fan assemblies shall be statically and dynamically balanced.
4. Guards for belts and fans shall be provided to meet OSHA requirements.

H. Motors/Drives
1. Heavy-duty, high efficiency designed specifically for use with electronic variable frequency drives. Efficiency shall meet the minimum requirements of IEEE 112, Test Method B.
2. Temperature rating shall be 50 deg C maximum rise at 40 deg C ambient.
3. Service factor shall be 1.15 for polyphase motors and 1.35 for single-phase motors.
4. Each motor shall be mounted on an adjustable base.
5. Noise rating shall be quiet.
6. Overload protection shall be built-in thermal with automatic-reset.
7. Sheaves shall be cast iron with v-belt sized for 150 percent BHP.
8. All three-phase motors shall be protected with phase loss protection. Protection shall be provided by the electrical system, by built-in protection, or by protection built into a variable frequency drive.

I. Filter Section
   1. Filter section shall be a cartridge section separate from the mixing box.
   2. The pre-filters shall be 2 inch and have a minimum MERV rating of 7.
   3. The primary filters shall have a minimum MERV rating ***between 11-14***, and be mounted just after the pre-filters.
   4. Refer to "LEED For Schools" for additional requirements.

J. Vibration Isolation
   1. Each fan system shall be isolated from the cabinet with spring-type isolation.
   2. Fans shall include concrete-filled inertia bases where recommended by unit manufacturer.
   3. Thrust restraints shall be included for all fan types.

K. Lighting and Convenience Outlet Circuit
   1. 1 vapor-proof service light and 1 convenience outlet shall be provided in each fan section and mixing box section. (optional for units less than 15,000 cfm)

1.5 INSTALLATION

A. Install in accordance with manufacturers requirements.

B. Startup and training to be provided by a factory-trained service technician.

LESSONS LEARNED

3.1 Air handling units designed and utilized at 100 percent outside air units (DOAS) should be equipped with a return/recirculation damper to assist the building in morning warm-up mode before occupancy. Reliance on heat pumps, VRF fan coils or chilled beams to warm up the building alone will cause longer warm-up times and using the DOAS unit for assistance without recirculating the return air will cause unnecessary energy consumption. Once the building enters morning warm-up, the recirculation damper should be closed and the unit operated per design.

END OF SECTION

SECTION 237323

CUSTOM INDOOR AIR HANDLING UNITS

GENERAL GUIDELINES

1.1 SECTION INCLUDES

A. Central station custom air handling units including fan sections, hot water heating coils, chilled water cooling coils, filter sections, mixing boxes, access modules, and other such equipment and accessories. Custom air handling units are intended only to be used to accommodate unusual mechanical room configurations where modular air handling units will not fit space allocated.

1.2 SUBMITTALS

A. Submittals are required and shall include product data noting the following:
   1. Product data indicating dimensions, weights, capacities, and materials.
   2. Fan performances including curves.
   3. Sound power levels.
   4. Filter data, mounting method, and performance.

1.3 QUALITY ASSURANCE

A. Construction standard shall meet NFPA 90A.

B. Product certification shall comply with ARI 430.

C. Sound power level rating shall comply with AMCA 300, AMCA 301, and ASHRAE 68.

D. Fan performance rating shall comply with AMCA 210.

E. Damper leakage rating shall comply with AMCA 500.

F. Coil performance shall comply with ARI 410.

G. Safety code for mechanical refrigeration shall comply with ASHRAE 15.

H. Filtration shall comply with ASHRAE 52.

1.4 COMPONENTS

A. Unit Construction
   1. Unit base shall be constructed of structural steel channel with welded construction. Include lifting lugs and internal supports for spans over 96 inches.
   2. Exterior housing shall be dual wall constructed with minimum 16 gauge galvanized exterior skin and 20 gauge interior skin over 2 inch, 3 pounds per cubic foot insulation.
   3. Unit floor shall be minimum 16 gauge galvanized steel and shall be welded to the floor structural system.
   4. Access doors shall be dual wall, and installed in each fan section and mixing box section as a minimum. Each door shall be fully gasketed with heavy-duty hinges and adjustable latches. Insulation and panel construction shall match the rest of the unit sections.

5. Insulation shall be minimum 2 inch thick, R-8.3 ft^2●h●°F/Btu for all wall and door assemblies. Floor insulation shall be 2 inch, R-8.3 ft^2●h●°F/Btu and installed directly beneath floor surface.
6. The finish for the unit shall include a painted exterior over galvanized steel having a minimum A-60 application.

B. Water Coils
1. Common or individual with minimum 16 gauge galvanized steel casings and intermediate supports for lengths over 60 inches.
2. Constructed of seamless copper tubes with aluminum plate fins, cast iron or copper headers, with connections for drain valve and air vent.
3. Drainable serpentine type.
4. Tested at 300 psi under water.
5. Dual wall, insulated, stainless steel drain pan of IAQ design ***under all cooling coils.***

C. Access Section
1. Section shall include an access door.
2. Access sections shall be placed between coil sections to allow access for cleaning and repair.

D. Mixing Box
1. Section shall be provided with return air and economizer air connections.
2. Dampers shall be provided and installed by the Temperature Control Contractor.

E. Fans
1. Fan type shall be (airfoil) (backward inclined) (forward curved) type.
   a. Double width, double inlet multi-blade fan wheel.
   b. Self aligning, grease lubricated ball bearings with lubrication fittings
   c. Fan and motor assembly internally isolated from unit casing.
2. Fan type shall be plug type.
   a. Single width, single inlet, multi-blade fan wheel.
   b. Self aligning, anti-friction pillow block bearings.
   c. Fan and motor assembly internally isolated including spring-supported inertia pad.
3. Fan assemblies shall be statically and dynamically balanced.
4. Guards for belts and fans shall be provided to meet OSHA requirements.

F. Motors/Drives
1. Heavy-duty, high efficiency designed specifically for use with electronic variable frequency drives. Efficiency shall meet the minimum requirements of IEEE 112, Test Method B.
2. Temperature rating shall be 50 deg C maximum rise at 40 deg C ambient.
3. Service factor shall be 1.15 for polyphase motors and 1.35 for single-phase motors.
4. Each motor shall be mounted on an adjustable base.
5. Noise rating shall be quiet.
6. Overload protection shall be built-in thermal with automatic-reset.
7. Sheaves shall be cast iron with v-belt sized for 150 percent BHP.
8. All three-phase motors shall be protected with phase loss protection. Protection shall be provided by the electrical system, by built-in protection, or by protection built into a variable frequency drive.

G. Filter Section
   1. Filter section shall be a cartridge section separate from the mixing box.
   2. The pre-filters shall be 2 inch and have a minimum MERV rating of 7.
   3. The primary filters shall have a minimum MERV rating ***between 11-14*** and be mounted just after the pre-filters.
   4. Refer to "LEED for Schools" for additional requirements.

H. Vibration Isolation
   1. Each fan system shall be isolated from the cabinet with spring-type isolation.
   2. Fans shall include concrete-filled inertia bases where recommended by unit manufacturer.
   3. Thrust restraints shall be included for all fan types.

I. Lighting and Convenience Outlet Circuit
   1. 1 vapor-proof service light and 1 convenience outlet shall be provided in each fan section, and mixing box section.

1.5 INSTALLATION

A. Install in accordance with manufacturers requirements.

B. Startup and training to be provided by a factory-trained service technician.

LESSONS LEARNED

3.1 Air handling units designed and utilized at 100 percent outside air units (DOAS) should be equipped with a return/recirculation damper to assist the building in morning warm-up mode before occupancy. Reliance on heat pumps, VRF fan coils or chilled beams to warm up the building alone will cause longer warm-up times and using the DOAS unit for assistance without recirculating the return air will cause unnecessary energy consumption. Once the building enters morning warm-up, the recirculation damper should be closed and the unit operated per design.

END OF SECTION

SECTION 238113

UNITARY AIR CONDITIONING EQUIPMENT

GENERAL GUIDELINES

1.1 SECTION INCLUDES

A. Qualitative requirements for packaged through-the-wall terminal air conditioning equipment and accessories.

1.2 SUBMITTALS

A. Submittals are required and shall include product data noting capacity, materials, controls, dimensions, and accessories.

1.3 QUALITY ASSURANCE

A. Refrigeration system shall meet ASHRAE 15.

B. Units must meet minimum efficiency requirements of ASHRAE Standard 90.1.

C. Performance rating shall comply with ARI 310/380.

D. All three-phase motors shall be protected with phase loss protection. Protection shall be provided by the electrical system, by built-in protection, or by protection built into a variable frequency drive.

1.4 WARRANTY

A. The unit compressor shall be warranted for 5 years.

1.5 COMPONENTS

A. The cabinet shall be constructed of galvanized steel with removable front panel.
1. Mounting: Wall installation with wall sleeve.
2. Finish: Baked enamel over heavy, 18 gauge, phosphatized galvanized steel.
3. Subbase: Enameled steel.
4. Louvers: Extruded aluminum, architectural style grille with horizontal louvers and baked enamel finish.
5. Discharge grille and access door: Extruded aluminum.
6. Cabinet extensions matching cabinet construction.

B. The refrigeration system shall be direct-expansion indoor coils with capillary restrictor and constant-pressure expansion valve, hermetically sealed compressor, outdoor coil and fan, and coaxial tube-in-tube condenser.

C. The indoor air system shall include forward-curved centrifugal indoor fan and motor, and permanent filters. Motors shall be high efficiency, permanent split capacity type. A positive pressure ventilation damper with connection cable shall be included with each unit.

D. The outdoor fan system shall include forward-curved centrifugal fan with separate motor from indoor system. Motors shall be high efficiency, permanent split capacity type.

E. Heating coils shall be electric resistance type with fusible link and an overheat limit control.

F. Condensate drain shall be provided for direct flow to the exterior of building.

G. The control system shall include a unit mounted control panel for setting of fan speeds, heating/cooling mode and automatic control.
   1. A unit mounted thermostat shall sense the air temperature at the fan inlet for control. The setting shall be adjustable.

1.6 INSTALLATION

A. Install in accordance with manufacturers requirements.

END OF SECTION

SECTION 238123

COMPUTER ROOM AIR CONDITIONERS

GENERAL GUIDELINES

1.1 SECTION INCLUDES

A. Qualitative requirements for air conditioning units intended specifically for computer rooms including package unit, refrigerant piping and specialties, reheat control, valves, and unit control.

1.2 SUBMITTALS

A. Submittals are required and shall include product data noting capacity, materials, controls, dimensions, and accessories.

1.3 QUALITY ASSURANCE

A. Refrigeration system shall meet ASHRAE 15.

B. Units must meet minimum efficiency requirements of ASHRAE Standard 90.1.

C. Units shall be UL Listed and CSA Certified.

D. All three-phase motors shall be protected with phase loss protection. Protection shall be provided by the electrical system, by built-in protection, or by protection built into a variable frequency drive.

1.4 WARRANTY

A. The entire unit shall be warranted for 5 years.

1.5 COMPONENTS

A. Cabinet and frame construction
1. Welded, heavy gauge galvanized steel frame
2. Zinc-coated steel with primer coat and baked enamel finish
3. Minimum 2 inch, 2 pound density fiber insulation
4. Hinged filter and grille for access

B. Filters
1. 1 inch thick, disposable and ***minimum MERV 7.***
2. Provide extra set at completion of work

C. Evaporator fan assembly
1. Fan shall be direct-drive with double inlet blower.

D. Refrigeration system
   1. Direct expansion coil with aluminum fins, copper tubes, thermal expansion valve, liquid line filter-dryer, service shutoff valves, charging valves, and stainless-steel drain pan.
   2. Hermetic compressor with vibration mounts.

E. Condenser section
   1. Air-cooled, copper tubes, aluminum fins, with refrigerant circuit of counterflow design including desuperheating section.
   2. Fan shall be double inlet, direct drive with a 3-speed motor and low limit ambient control to prevent evaporator freezeup.

F. Reheat section
   1. Electric reheat coils shall be low-density, tubular type elements, with UL approved safety switches.

G. Condensate drain system
   1. The condensate drain system shall include a condensate pump with integral float switch, pump/motor assembly, and reservoir.

H. Control system
   1. The control system shall be solid state and shall include a remote thermostat and shutoff switch for field installation.

1.6 INSTALLATION

A. Install in accordance with manufacturers requirements.

B. Startup and training to be provided by a factory-trained service technician.

END OF SECTION

SECTION 238146

WATER SOURCE HEAT PUMPS

GENERAL GUIDELINES

1.1 SECTION INCLUDES

A. Qualitative requirements for packaged horizontal or vertical water source heat pump air conditioning/heating unit, unit-mounted controls, and accessories.

1.2 SUBMITTALS

A. Submittals are required and shall include product data noting capacity, materials, controls, dimensions, and accessories.

1.3 QUALITY ASSURANCE

A. Refrigeration system shall meet ASHRAE 15.

B. Units must meet minimum efficiency requirements of ASHRAE Standard 90.1.

C. Performance rating shall comply with ARI/ASHRAE/ISO 13256-1.

D. Safety requirements shall comply with UL 484/559.

E. All three-phase motors shall be protected with phase loss protection. Protection shall be provided by the electrical system, by built-in protection, or by protection built into a variable frequency drive.

1.4 WARRANTY

A. Heat pump unit shall be warranted for one year for all parts including labor and a total of 5 years on compressor parts.

1.5 COMPONENTS

A. Unit shall be rated to operate with an entering water temperature from 25 degrees Fahrenheit to 115 degrees Fahrenheit. Note that operating the ground loop below 40 degrees will require glycol freeze protection.

B. The cabinet shall be constructed of galvanized steel with 0.5 inch, 1-1/2 pound per cubic foot density insulation. Internal sheet metal parts shall be protected with a thermosetting, plastic coating.

C. Heat pump shall include refrigeration circuit with single or dual capacity hermetic compressor.

1. Refrigerant air-to-air copper-tube coil heat exchanger.
2. Refrigerant shall be HFC
2. Water-to-refrigerant coaxial tube-in-tube heat exchanger.
3. Refrigerant flow control using capillary tube or thermal expansion valve.
4. High and low pressure safety cutoffs.
5. Pilot controlled reversing valve.

6. Thermal overload protection.
7. External vibration isolation.
8. Internal compressor vibration isolation.
9. Insulate water-to-refrigerant heat exchanger and refrigerant suction lines.

D. Forward curved, centrifugal type evaporator fan with multi-speed, high-efficiency PSC or ECM type motor including integral mounting brackets and thermal overload protection.

E. Galvanized steel insulated drain pan with external drain connection. Provide with solid-state liquid detection device in the drain pan to stop compressor if condensate accumulates.

F. Filter frame with 1 inch throwaway filter. Filter must be MERV 13 if designer is going after LEED EQ 5.0.

G. The control system shall include a unit-mounted microprocessor control panel design for interface to the building DDC electronic control system. Controller shall be capable of auto heating and cooling changeover and capacity control. Manufacturer shall provide all necessary control components (t-stats, humidistats, etc.) necessary for control of heat pump.

H. Units shall be finished with enamel paint to the manufacturer's standard color.

I. Provide interior acoustical insulation to deaden fan and compressor noise.

J. Provide insulated auxiliary drain pan under the coil connections if equipment is above finished ceilings.

1.6 INSTALLATION

A. Install in accordance with manufacturers requirements.

B. Hose kit and associated shutoff and flow control devices shall be field installed by the HVAC Contractor.

END OF SECTION

SECTION 238156

GROUND SOURCE HEAT PUMPS (GEOTHERMAL)

GENERAL GUIDELINES

1.1 SECTION INCLUDES

A. Qualitative requirements for packaged horizontal or vertical ground source heat pump air conditioning/heating unit, unit-mounted controls, and accessories.

1.2 SUBMITTALS

A. Submittals are required and shall include product data noting capacity, materials, controls, dimensions, and accessories.

1.3 QUALITY ASSURANCE

A. Refrigeration system shall meet ASHRAE 15.

B. Units must meet minimum efficiency of 16 EER cooling and 3.5 COP Heating under ARI/ISO Standard 13256-1 Ground Loop Conditions (ARI 330). Multiple or variable speed heat pumps shall achieve this rating at high speed.

C. Performance rating shall comply with ARI/ASHRAE/ISO 13256-1.

D. Safety requirements shall comply with UL 484/559.

E. All three-phase motors shall be protected with phase loss protection. Protection shall be provided by the electrical system, by built-in protection, or by protection built into a variable frequency drive.

1.4 WARRANTY

A. Heat pump unit shall be warranted for one year for all parts including labor and a total of 5 years on compressor parts.

1.5 COMPONENTS

A. Unit shall be rated to operate with an entering water temperature from 25 degrees F. to 115 degrees F. Note that operating the ground loop below 40 degrees will require glycol freeze protection.

B. The cabinet shall be constructed of galvanized steel with 0.5 inch, 1-1/2 pound per cubic foot density insulation. Internal sheet metal parts shall be protected with a thermosetting, plastic coating.

C. Heat pump shall include refrigeration circuit with single or dual capacity hermetic compressor.
   1. Refrigerant air-to-air copper-tube coil heat exchanger.
   2. Refrigerant shall be HFC.
   2. Water-to-refrigerant coaxial tube-in-tube heat exchanger.

3. Refrigerant flow control using capillary tube or thermal expansion valve.
4. High and low pressure safety cutoffs.
5. Pilot controlled reversing valve.
6. Thermal overload protection.
7. External vibration isolation.
8. Internal compressor vibration isolation.
9. Insulate water-to-refrigerant heat exchanger and refrigerant suction lines.

D. Forward curved, centrifugal type evaporator fan with multi-speed, high-efficiency ECM type motor including integral mounting brackets and thermal overload protection.

E. Galvanized steel insulated drain pan with external drain connection. Provide with solid-state liquid detection device in the drain pan to stop compressor if condensate accumulates.

F. Filter frame with 1 inch throwaway filter. Filter must be MERV 13 if designer is going after LEED EQ 5.0.

G. The control system shall include a unit-mounted microprocessor control panel design for interface to the building DDC electronic control system. Controller shall be capable of auto heating and cooling changeover and capacity control. Manufacturer shall provide all necessary control components (t-stats, humidistats, etc.) necessary for control of heat pump.

H. Units shall be finished with enamel paint to the manufacturer's standard color.

I. Provide interior acoustical insulation to deaden fan and compressor noise.

1.6 INSTALLATION

A. Install in accordance with manufacturers requirements.

B. Hose kit and associated shutoff and flow control devices shall be field installed by the HVAC Contractor.

END OF SECTION

SECTION 238219

FAN COIL UNITS – FOUR PIPE

GENERAL GUIDELINES

1.1 SECTION INCLUDES

A. Qualitative requirements for fan coil units and accessories.

1.2 SUBMITTALS

A. Submittals are required and shall include product data noting capacity, materials, controls, dimensions, and accessories.

1.3 QUALITY ASSURANCE

A. Units must meet minimum efficiency requirements of ASHRAE Standard 90.1.

B. Performance rating shall conform to N.E.C requirements and shall be UL labeled.

C. Unit capacities shall be certified in accordance with ARI Standard 440-98.

1.4 WARRANTY

A. The entire unit shall be warranted for 5 years.

1.5 COMPONENTS

A. Cabinet and frame construction
1. Welded, heavy gauge galvanized steel frame
2. Zinc-coated steel with primer coat and baked enamel finish
3. Minimum 2 inch, 2 pound density fiber insulation
4. Hinged filter and grille for access

B. Filters
1. 1 inch thick, disposable and ***MERV 7*** efficiency.
2. Provide extra set at completion of work.

C. Centrifugal supply air fan
1. Fan shall be forwardly curved double width-double inlet, with common shaft mounted on a removable fan board, driven by a three-speed permanent split capacitor motor having built-in overload protection.

D. Chilled water cooling coil
1. Coil shall consist of seamless copper tubes with bonded aluminum fins. Coils shall be designed for 300 psi w.p.
2. A manual air vent shall be provided on each coil.

E. Hot water heating coil
1. Coil shall consist of seamless copper tubes with bonded aluminum fins. Coils shall be designed for 300 psi w.p.
2. A manual air vent shall be provided on each coil.

F. Condensate drain system

1. The condensate drain system shall include a condensate drain pan under the cooling coil, pitched to drain, and an auxiliary drain pan under the coil connections. Provide auxiliary drain pan and/or condensate high limit fan cutoff as required by code.

G. Control system

1. The control system shall be a complete system of electronic direct digital controls.

1.6 INSTALLATION

A. Install in accordance with manufacturers requirements.

B. Startup and training to be provided by a factory-trained service technician.

END OF SECTION

SECTION 238223

UNIT VENTILATORS – FOUR PIPE

GENERAL GUIDELINES

1.1 SECTION INCLUDES

A. Qualitative requirements for unit ventilator units and accessories.

1.2 SUBMITTALS

A. Submittals are required and shall include product data noting capacity, materials, controls, dimensions, and accessories.

1.3 QUALITY ASSURANCE

A. Units shall be tested and performance certified in accordance with ARI 840-98.

B. Units must meet minimum efficiency requirements of ASHRAE Standard 90.1.

C. Units shall be UL or ETL listed.

1.4 WARRANTY

A. The entire unit shall be warranted for 5 years.

1.5 COMPONENTS

A. The cabinet shall be constructed of galvanized steel with removable front panel.
   1. Mounting: Wall installation with wall sleeve.
   2. Finish: Baked enamel over heavy, 18 gauge, phosphatized galvanized steel.
   3. Subbase: Enameled steel.
   4. Louvers: Extruded aluminum, architectural style grille with horizontal louvers and baked enamel finish.
   5. Discharge grille and access door: Extruded aluminum.
   6. Cabinet extensions matching cabinet construction.

B. Centrifugal fans, forwardly curved double width-double inlet, with common shaft mounted on a removable fan board, driven by a single speed, permanent split capacitor motor having built-in overload protection and Class F winding insulation. The motor shall be factory wired to a solid state, single phase, variable speed controller with minimum turndown to 30% of total motor speed. A toggle type disconnect switch shall be furnished with each unit to provide electrical disconnect of power to all components.

C. Chilled water cooling coil and separate hot water heating coil for a four-pipe system, each consisting of seamless copper tubes with bonded aluminum fins. Coils shall be designed for 300 psi w.p. A manual air vent shall be provided on each coil.

D. Outside Air – Return air dampers with edge seals arranged for automatic operation modulating form zero to 100% outside air intake.

E. Coil face and bypass modulating dampers with edge seals, arranged for automatic operation to regulate heat output.

F. Insulated drain pan under the cooling coil and insulated auxiliary drain pan under the coil connections shall be furnished.

G. Air filter, 1" pleated filter with cardboard frame. MERV value shall be 7.0.

H. Control system
   1. The control system shall be a complete system of electronic direct digital controls.

1.6 Outside air intake louver and protective lattice grille. Louver shall have vertical blades and bird screen. Louver and grilles shall be furnished in Kynar 500 with color selected by the Architect. Louvers and grilles shall be standard sizes except where otherwise noted on the drawings.

1.7 INSTALLATION

A. Install in accordance with manufacturers requirements.

B. Startup and training to be provided by a factory-trained service technician.

END OF SECTION

SECTION 238233

CONVECTORS

GENERAL GUIDELINES

1.1 SECTION INCLUDES

A. Qualitative requirements for convectors and fin tube radiation.

1.2 SUBMITTALS

A. Submittals are required and shall include product data noting capacities at the specified conditions, materials, sizes, and dimensions.

1.3 QUALITY ASSURANCE

A. Radiation pressure tested to 200 psig.

1.4 COMPONENTS

A Hydronic Finned-Tube Radiation and Enclosure
1. Finned Tubes: Constructed of copper tube and aluminum fins
2. Enclosure: Steel, sloped front with factory baked enamel finish.
3. Provide with wall hang brackets for piping, finned tube element and enclosure support.

1.5 INSTALLATION

A. Install per manufacturers requirements.

END OF SECTION

SECTION 238239

CABINET UNIT HEATERS

GENERAL GUIDELINES

1.1 SECTION INCLUDES
- A. Qualitative requirements for ceiling mounted hydronic and electric cabinet unit heaters.

1.2 SUBMITTALS
- A. Submittals are required and shall include product data noting capacities at the specified conditions, materials, sizes, and dimensions.

1.3 QUALITY ASSURANCE
- A. Capacity rated in accordance with ARI.
- B. Hydronic coils shall be pressure tested to 400 psig.
- C. Units shall be UL or ETI listed and labeled.

1.4 COMPONENTS
- A Hydronic Cabinet Unit Heaters
  1. Cabinets shall be formed steel suitable for recessed ceiling mounting. Provide with stamped grilles for air inlet and outlet or ducted connections.
  2. Coils shall be constructed of seamless copper tubing that is mechanically bonded to aluminum fins.
  3. Fans shall be forward curved centrifugal direct drive.
  4. Provide with disconnect switch, fused motor protection and fan speed controller switch.
  5. Provide with 1 inch throw away fiberglass filter.
  6. Provide with end pockets on both ends of the cabinet suitable in size for concealing piping and valving.
  7. Provide factory enamel finish.
- B. Electric Cabinet Unit Heaters
  1. Cabinets shall be formed steel suitable for wall mounting (surfaced or semi-recessed to 8 inches) or recessed ceiling mounting. Provide with stamped grilles for air inlet and outlet (location dependent on style selected).
  2. Coils shall be constructed of nickel chromium wire in a metallic sheath with fins no closer than .16 inches and free from expansion noise and 60-Hz hum.
  3. Fans shall be forward curved centrifugal direct drive.
  4. Provide with disconnect switch, coil relay switches, and fan speed controller switch.
  5. Provide with fan and electric coil circuit protection.
  6. Provide factory enamel finish.

1.5 INSTALLATION
- A. Install per manufacturers requirements.

END OF SECTION

SECTION 238240

PROPELLER UNIT HEATERS

GENERAL GUIDELINES

1.1 SECTION INCLUDES

A. Qualitative requirements for horizontal or vertical hydronic and electric propeller unit heaters.

1.2 SUBMITTALS

A. Submittals are required and shall include product data noting capacities at the specified conditions, materials, sizes, and dimensions.

1.3 QUALITY ASSURANCE

A. Capacity rated in accordance with ARI.

B. Hydronic coils shall be pressure tested to 400 psig.

C. Units shall be UL or ETI listed and labeled.

1.4 COMPONENTS

A Hydronic Propeller Unit Heaters
1. Cabinets shall be formed steel. Provide with louvered adjustable grilles for air outlet.
2. Coils shall be constructed of seamless copper tubing that is mechanically bonded to aluminum fins.
3. Fans shall be propeller type direct drive.
4. Provide factory enamel finish.

B. Electric Propeller Unit Heaters
1. Cabinets shall be formed steel. Provide with louvered adjustable grilles for air outlet.
2. Coils shall be constructed of nickel chromium wire in a metallic sheath with fins no closer than .16 inches and free from expansion noise and 60-Hz hum.
3. Fans shall be forward curved centrifugal direct drive.
4. Provide with fused fan and electric coil circuit protection.
5. Provide factory enamel finish.

1.5 INSTALLATION

A. Install per manufacturers requirements.

END OF SECTION

SECTION 238316

RADIANT HEATING HYDRONIC SYSTEM

GENERAL GUIDELINES

1.1 SECTION INCLUDES

A. Qualitative requirements for hydronic ceiling radiation and enclosure.

1.2 SUBMITTALS

A. Submittals are required and shall include product data noting capacities at the specified conditions, materials, sizes, and dimensions.

B. Shop drawings are required denoting layout of each radiant panel.

1.3 QUALITY ASSURANCE

A. Radiation pressure tested to 400 psig.

1.4 COMPONENTS

A Hydronic ceiling radiation:
1. Panels: Constructed of extruded ribbed aluminum with copper serpentine coil. The coil shall be mechanically bonded to the aluminum panel.
2. Provide 2 inch thick fiberglass insulation on the top side of the radiant panel.
3. Provide factory enamel finish.

1.5 INSTALLATION

A. Install per manufacturers requirements.

END OF SECTION

26 DIVISION

ELECTRICAL

TABLE OF CONTENTS

DIVISION 26: ELECTRICAL

260513	Medium Voltage Cables 2001 to 35,000 v
260519	Low Voltage Electrical Power Conductors and Cables
260526	Grounding and Bonding of Electrical Systems
260529	Hangers and Supporting Devices
260533	Raceway and Boxes for Electrical Systems
260536	Cable Tray for Electrical Systems
260543	Underground Ducts and Raceways for Electric Systems
260923	Lighting Control Devices
261200	Medium Voltage Transformers
261300	Medium Voltage Switchgear
262200	Low Voltage Transformers
262413	Switchboards
262416	Panelboards
262419	Motor Control Centers
262726	Wiring Devices
262813	Fuses and Fuse Holders
262816	Enclosed Switches and Circuit Breakers
262913	Enclosed Controllers
263213	Package Engine Generators
263600	Transfer Switches
264313	Transient Voltage Suppression for Low-Voltage Electrical Power Circuits
265100	***Interior Lighting***
265561	***Theatrical Dimming System***
265600	Exterior Lighting

SECTION 260513

MEDIUM VOLTAGE CABLES ***601*** to 35,000 V

GENERAL GUIDELINES

1.1 SECTION INCLUDES

A. Qualitative requirements for cables, related splices, and terminations.

1.2 QUALITY ASSURANCE

A. IEEE C2

B. NFPA 70 – National Electric Code

C. Underwriter's Laboratory

D. Trained and Certified Cable Splicer – by material manufacturer

1.3 CABLES

A. UL Cable Type MV 90

B. UL 1072, AEIC CS 8, ***ICEA S-94-649***, ICEA s-97-682 compliant

C. Conductor material shall be copper ***or aluminum***

D. Cross linked polyethylene 133 percent insulation

E. ***Bare*** copper shielding wire

1.4 SPLICE KITS

A. Comply with IEEE 404

B. Type recommended by manufacturer

1.5 TERMINATIONS

A. Comply with IEEE 48

1.6 INSTALLATION

A. Install cables according to IEEE 576

END OF SECTION

SECTION 260519

LOW VOLTAGE ELECTRICAL POWER CONDUCTORS AND CABLES

GENERAL GUIDELINES

1.1 SECTION INCLUDES

A. Qualitative requirements for building wire and cable for wiring systems of 600V or less

B. Qualitative requirements for connectors, splices, terminations, and accessories for electrical distribution systems rated 600 volt or less.

1.2 QUALITY ASSURANCE – Copper Conductors

A. NFPA 70 - National Electrical Code

B. Underwriter's Laboratory

C. Copper Conductors NEMA WC 70.

D. 600V Insulating Material NEMA WC 70.

E. Conductor Connection Torque Value UL 486A.

1.3 QUALITY ASSURANCE – Aluminum Conductors

A. NFPA 70 – National Electrical Code

B. Underwriter's Laboratory 1581 – table 10.1

C. Aluminum Association 8000 series

D. Conductor Connectors UL 486 B

E. UL Standard 44

F. ICEA S-95-658 NEMA WC 70

1.4 COPPER CABLE AND WIRING - 600V OR LESS

A. Conductor material shall be copper.

B. Wire and cable shall be rated 600V.

C. Minimum conductor size shall be #12 AWG

D. Type XHHW

E. Type THHN/THWN

F. Type AC, 3 conductor, 75C insulation, copper conductor, armored cable.

G. Type MC, 3 conductor, 75C insulation, copper conductor, metal clad cable.

1.5 ALUMINUM CABLE AND WIRING – 600v or less

A. Conductor material shall be aluminum

B. Minimum size conductor shall be No. 6 AWG

C. Type XHHW-2

D. 90 degree Celsius temperature rating

E. Cable rated for 600 volts

1.6 MANUFACTURED WIRING SYSTEMS

A. Premanufactured, relocatable, integrated electrical branch wiring system for lighting in accessible ceilings.

B. Minimum No. 12 AWG copper wire with 600-volt, 90 degree insulation.

C. Minimum No. 12 AWG insulated copper ground wire.

D. Pin and socket contacts connected to branch circuit conductor.

E. Metal constructed cable heads with corrosion-resistant heads.

F. Designed so no interconnection can occur between different electrical voltages.

G. System shall be completely modular in construction incorporating conversion modules, prefabricated receptacles located in top of light fixtures, modular selector cables for connecting to light fixtures, and cable extenders.

H. System shall be capable of being manufactured to conforming to light switching arrangements required.

1.7 COPPER PERFORMANCES

A. Type THHN/THWN or XHHW in raceway for service entrance wiring.

B. Type THHN/THWN in raceway for feeders and branch circuits.

C. Type THHN/THWN for exterior branch circuits.

D. Minimum conductor size shall be #12 AWG for power circuits, #14 AWG for controls.

E. Feeders and branch circuits shall be concealed above accessible ceilings, in walls, chases, and below slab-on-grade.

F. Manufactured wiring system installation shall be limited to wiring between light fixtures located in accessible acoustical tile ceilings and from junction box located above ceiling to fixtures. Conduit shall be provided from light fixture switch location to junction box located above ceiling.

1.8 ALUMINUM PERFORMANCES

A. Type XHHW-2 in raceway for service entrance wiring, branch circuit feeders to panelboards, and distribution panels.

B. Connectors shall be dual-rated (AL7CH or AL9CH).

C. Aluminum conductor is not approved for branch circuits to receptacles, lighting fixtures, or mechanical/electrical motor circuits.

D. Feeders and branch circuits shall be concealed above accessible ceilings, in walls, chases, and below slab-on-grade.

E. Aluminum conductors shall be connected, terminated, and torque per manufacturer's recommendations.

END OF SECTION

SECTION 260526

GROUNDING and BONDING OF ELECTRICAL SYSTEMS

GENERAL ***GUIDELINES***

1.1 SECTION INCLUDES

A. Qualitative requirements for grounding for low and medium voltage systems and equipment

B. Qualitative requirements for basic requirements for grounding for protection of life, equipment, circuits, and systems

C. Qualitative requirements for grounding of underground distribution components.

1.2 QUALITY ASSURANCE

A. NFPA 70 - National Electrical Code

B. UL 467

C. Bare solid copper conductors ASTM B3.

D. Bare stranded copper conductors ASTM B8.

E. Underground distribution components IEEE C2.

1.3 MATERIALS

A. Minimum No. 12 AWG 600V insulated copper equipment grounding conductor insulated with green colored insulation.

B. Stranded cable grounding electrode conductors.

C. Bare copper conductors.

D. Grounding bus consisting of bare annealed ¼ inch by 2 inch copper bars of rectangular cross section.

E. Braided No. 30 AWG bare copper wire bonding jumpers.

F. Copper clad steel 3/4 inch grounding rods.

1.4 PERFORMANCES

A. Conduit is not an allowable grounding means.

B. Continuous grounding conductor carried throughout the power system.

C. Grounding of voice, video and data systems.

D. Provide grounding of circuits, equipment, conduits and etc. as required by the NEC.

E. Ground manholes and handholes with grounding electrode and No. 1/0 AWG bare copper conductor.

END OF SECTION

SECTION 260529

HANGERS AND SUPPORTING DEVICES

GENERAL ***GUIDELINES***

1.1 SECTION INCLUDES

A. Hangers and supporting devices for electrical components

1.2 QUALITY ASSURANCE

A. NFPA 70 - National Electrical Code

B. Underwriter's Laboratory

1.3 MATERIALS

A. Steel Slotted Support Systems: Comply with MFMA-4, factory-fabricated components for field assembly.

B. Raceway and Cable Supports: As described in NECA 1 and NECA 101.

C. Conduit and Cable Support Devices: Steel hangers, clamps, and associated fittings, designed for types and sizes of raceway or cable to be supported.

D. Structural Steel for Fabricated Supports and Restraints: ASTM A 36/A 36M, steel plates, shapes, and bars; black and galvanized.

E. Mounting, Anchoring, and Attachment Components:
1. Mechanical-Expansion Anchors: Insert-wedge-type, zinc-coated steel
2. Concrete Inserts: Steel or malleable-iron
3. Clamps for Attachments to Steel Structural Elements
4. Through Bolts: Structural type, hex head, and high strength
5. Toggle Bolts: All-steel springhead type
6. Hanger Rods: Threaded steel

1.4 Hangars, supports, and fastening methods used shall be suitable for the weight of the components being supported.

END OF SECTION

SECTION 260533

RACEWAY AND BOXES FOR ELECTRICAL SYSTEMS

GENERAL ***GUIDELINES***

1.1 SECTION INCLUDES

A. Qualitative requirements for raceways, boxes, wireways, raceway fittings, and technology raceways.

1.2 QUALITY ASSURANCE

A. NFPA 70 - National Electrical Code

B. Underwriter's Laboratory

. C. Rigid Metal Conduit (RMC) ANSI C80.1.

D. Intermediate Metal Conduit (IMC) ANSI C 80.6.

E. Electrical Metallic Tubing (EMT) ANSI C 80.3.

F. Liquidtight Flexible Metal Conduit (LFMC) UL 360.

G. Underground Non-Metallic Conduit (RNC) NEMA TC 2, Type EPC-40-PVC.

1.3 RACEWAY MATERIALS

A. Rigid Metal Conduit.

B. Intermediate Metal Conduit.

C. Electrical Metallic Tubing (EMT).

D. Liquidtight Flexible Metal Conduit.

E. Underground Non-Metallic Conduit.

1.4 TECHNOLOGY RACEWAY

A. From technology outlet box provide two 1 inch conduits and extend the conduits to the associated telecommunications cable tray. Coordinate requirements with the Technology Designer.

B. Utility Entrances
   1. Two 4 inch for telephone service from service pole to main technology equipment room.
   2. One 3 inch for cable television service from service pole to main technology equipment room.
   3. One 4 inch from service pole to main technology equipment room for wide area network (WAN).

1.5 METAL WIREWAYS

A. Sheet metal sized for conductors.

B. NEMA 250 Type 1.

C. Screw-on covers.

D. NEMA 1 general purpose rating at interior of building.

E. NEMA 3R raintight rating at exterior applications.

1.6 OUTLET C-D DEVICE BOXES

A. Metal boxes NEMA OS 1 compliant.

B. Cast metal, fully adjustable, rectangular floor box.

C. Metal pull boxes NEMA OS 1 compliant.

D. Exposed boxes cast type FS or FSA.

E. Outlet boxes for technology shall be minimum 3 ½ inch deep.

1.7 FITTINGS

A. NEMA FB 1 listed.

B. Hazardous (classified) location UL 886 compliant.

C. EMT Fittings: Metal compression or set screw type.

1.8 PERFORMANCES

A. RNC conduit may be used under building slab on grade for branch feeder and branch circuits. Conduit shall be installed in drainage fill.

B. RNC conduit may be used for exterior branch circuits. Encase PVC conduit in concrete when under drives and parking areas.

C. Raceway installation shall comply with NECA 1.

ALLOWABLE CONDUIT USAGE

CIRCUIT IDENTIFICATION	***ALLOWABLE TYPE CONDUIT***						
	GRC	IMC	EMT**	RNC*	Flex	W.P.Flex	MC Cable
Underground secondary service entrance conduit	X			X			
Feeders to switchboards, panels, motors, transformers, exposed conduit	X	X	X				
Connections to interior light fixtures & transformers					X		
Connections to motors & motorized equipment, interior & exterior						X	
Underground interior feeder conduit	X	X		X			
Branch circuit wiring from light fixture to light fixture						X	X
Underground exterior branch conduit	X	X		X			
Exposed conduits	X	X	X				
Conduits in metal stud partitions			X				X
Conduits buried in block walls	X	X	X				
Conduits above suspended ceilings	X	X	X				
Misc. low voltage systems (fire alarm) up to 4”C size. (EMT not allowed underground or as otherwise limited above)	X	X	X				
Interior above ceiling conduits 3 ½” and larger except as otherwise permitted	X	X	X				

* With 3 inch concrete envelope under drives and sidewalks.
** Not approved for exterior or exposed below 8 feet AFF.

END OF SECTION

SECTION 260536

CABLE TRAY FOR ELECTRICAL SYSTEMS

GENERAL ***GUIDELINES***

1.1 SECTION INCLUDES

A. Qualitative requirements for cable tray.

1.2 QUALITY ASSURANCE

A. NFPA 70 - National Electrical Code.

B. Underwriter's Laboratory.

C. NEMA VE1 Cable Tray Systems.

1.3 MATERIALS

A. Non-corrosive metal constructed center spine or wire baskets.

B. Rungs at 9 inch on center.

C. Wire mesh basket.

D. Cold-rolled steel ventilated tray.

E. Minimum size shall be 18 inches wide with 6 inch loading depth.

F. Color coded rung caps.

1.4 PERFORMANCES

A. Provide grounding per NFPA 70.

B. Install per NEMA VE2.

C. Install with ½ inch threaded rods.

END OF SECTION

SECTION 260543

UNDERGROUND DUCTS AND RACEWAYS FOR ELECTRIC SYSTEMS

GENERAL ***GUIDELINES***

1.1 SECTION INCLUDES

A. Qualitative requirements for conduits, ducts, handholes, and manholes.

1.2 QUALITY ASSURANCE

A. NFPA 70 – National Electric Code.

B. ANSI C2.

1.3 NON-METALLIC CONDUITS

A. Rigid non-metallic conduit type EPC-40-PVC, NEMA TC2, UL 561.

1.4 NON-METALLIC DUCTS

A. Rigid non-metallic Type EB-20-PVC, ASTM F 512, UL 651A.

1.5 HANDHOLES

A. Reinforced – concrete complying with ASTM C 858.

B. Cast-iron weatherproof frame.

C. Cast-iron cover with “electric” or “communication” legend.

1.6 MANHOLES

A. Reinforced concrete complying with ASTM C 858.

B. Cast-iron weatherproof frame.

C. Cast-iron cover with “electric” or “communication” legend.

1.7 PERFORMANCE

A. Verify ductbank applications with local utility company.

B. Verify loading requirements of manholes and handholes depending on locations.

END OF SECTION

SECTION 260923

LIGHTING CONTROL DEVICES

GENERAL ***GUIDELINES***

1.1 SECTION INCLUDES

A. Qualitative requirements for time switches, outdoor photoelectric switches, indoor occupancy sensors, and lighting contactors.

1.2 QUALITY ASSURANCE

A. Underwriter's Laboratory

B. NFPA 70 – National Electric Code

1.3 TIME SWITCHES

A. Contact configuration: SPST, DPST, SPDT, or DPDT.

B. Comply with UL 917.

C. 40-amp contact rating.

D. Electromechanical or fully electronic.

E. Skip-a-Day mode.

F. Astronomic time dial.

1.4 OUTDOOR PHOTOELECTRIC SWITCH

A. Solid State with SPDT or DPST contacts required for application.

B. 1800 VA tungsten or 1000 VA inductive load.

C. Comply with UL 773 A.

D. Illumination monitoring range from 1.5 to 10 foot candles with turn "on" and "off" adjustments.

E. 15 second minimum time delay.

1.5 INDOOR OCCUPANCY SENSORS

A. Contacts rated to operate connected relay complying with UL 773 A.

B. Dry contacts rated for 20 amp ballast load ct 120 and 277 voH.

C. Power supply to server shall be 24-Vdc or 150-mA.

D. Recessed and concealed time delay and sensitivity adjustments.

E. LED indicator to show motion is being detected.

F. Equipped with bypass sensor override switch in case of sensor failure.

G. Passive infrared type.

H. Ultrasonic type.

I. Dual technology combination of infrared and ultrasonic.

1.6 LIGHTING CONTACTORS

A. Electrically or mechanically held type complying with NEMA ICS 2 and UL 508.

B. Two through 12 poles field convertible contacts.

C. 20-A tungsten lighting rating or 30-A fluorescent lighting rating.

D. NEMA 250 type I indoor enclosure.

1.7 INSTALLATION

A. Install and aim sensors to achieve 90 percent of area.

B. Verify operation of each lighting control device and adjust time delays.

END OF SECTION

SECTION 261200

MEDIUM VOLTAGE TRANSFORMERS

GENERAL ***GUIDELINES***

1.1 SECTION INCLUDES

A. Qualitative requirements for pad mounted, liquid filled transformers.

1.2 QUALITY ASSURANCE

A. ANSI C57.12.26

B. NFPA 70- National Electric Code

C. IEEE C 57.12

D. Underwriter's Laboratory

E. ANSI C57.12.13.

F. Mineral Oil ASTM D 3487

1.3 MATERIALS

A. The mineral oil filled transformer shall be compartmental type, self-cooled and weather protected.

B. Tap changing mechanism for accurate voltage adjustment without opening the tank.

C. Compartments for medium and low voltage separated by a steel barrier.

D. Surge arresters for each primary phases.

E. Primary fuses complying with IEEE C 37.47.

F. Arranged for radial or loop feed as required for application.

G. Primary and secondary voltage as required.

H. Mineral Oil tested according to ASTM D 117.

I. Basic input level shall be standard value for primary equipment voltage per applicable IEEE standard.

END OF SECTION

SECTION 261300

MEDIUM VOLTAGE SWITCHGEAR

GENERAL ***GUIDELINES***

1.1 SECTION INCLUDES

A. Qualitative requirements for metal enclosed interruptor switchgear.

1.2 QUALITY ASSURANCE

A. NFPA – National Electric Code

B. Underwriter's Laboratory

C. IEEE C2

D. IEEF C37.20.3

1.3 METAL-ENCLOSED INTERRUPTOR SWITCHGEAR

A. Suitable for application in 3-phase, 60 Hz, solidly grounded-neutral system.

B. System Voltage: KV nominal to match utility voltage available.

C. 600 amp main continuous bus rating.

D. Power fuses to comply with NEMA SG-2.

E. Outdoor enclosure of weatherproof steel construction.

F. Surge arrestors to comply with NEMA LA1.

G. Tin-plated copper or aluminum busing.

1.4 INSTALLATION

A. Coordinate location and voltage with local electric utility and authority having jurisdiction.

B. Provide arc flash hazard label on equipment per the National Electrical Code.

END OF SECTION

SECTION 262200

LOW VOLTAGE TRANSFORMERS

GENERAL ***GUIDELINES***

1.1 SECTION INCLUDES

A. Qualitative requirements for dry type distribution transformers rated 600V or less, buck-boost transformers, and energy efficient dry type transformers.

1.2 QUALITY ASSURANCE

A. Dry Type Distribution Transformers: NEMA TP-1.

B. High Efficiency Dry Type Distribution Transformers: Department of Energy CSL 3.

C. Buck-Boost Transformers NEMA ST 1, UL 506.

D. Sound levels NEMA ST1-4 and ANSI C89.1.

1.3 DRY TYPE TRANSFORMERS (NEMA TP-1)

A. Transformers shall be dry type gravity ventilated for wall or floor mounting.

B. KVA rating shall be as denoted on the drawings.

C. Transformers rated 7.5 kVA through 24 kVA shall have two -5 percent taps, below rated voltage.

D. Transformers rated 25 kVA and larger shall have two 2-1/2 percent F.C.A.N. taps and four 2-1/2 percent F.C.B.N. taps, unless otherwise noted.

E. Coils: continuous windings without splices except for taps.

F. Insulation Class for Transformers 14 kVA and smaller: 180 degrees C, UL component recognized insulation system with a maximum of 115 degrees C rise above 25 degrees C ambient temperature.

G. Insulation Class for Transformers 15 kVA and Larger: 220 degrees C, UL component recognized insulation system with a maximum of 150 degrees C rise above 40 degrees C ambient temperature.

H. Cores shall be manufactured with non-ageing silicon steel.

I. The core and coil assembly shall be mounted on vibration pads and bolted to the enclosure.

J. Copper or aluminum windings to brace coil layers.

K. Enclosure shall be heavy gauge steel.

L. There shall be no metal to metal contact between the core, coil, and the enclosure.

1.4 DRY TYPE TRANSFORMER (***NEMA Premium***)

A. Transformer shall be dry type gravity ventilated.

B. KVA rating shall be as shown as drawings.

C. Transformers rated 30 KVA–300 KVA shall have two 2-1/2% F.C.A.N. and two 2-1/2% F.C.B.S. taps. Transformers rated 15 KVA–500 KVA shall have one 5% F.C.A.N. and one 5% F.C.B.N. tap.

D. Copper ***or aluminum***-wound, 3-phase, common core insulation transformer built to NEMA ST20.

E. 200% rated neutral, 60 Hz, 10kV BIL.

F. Insulation class 220 degrees C.

G. Labeled K Rating: K-7.

H. Minimum efficiency shall comply with the following when tested per ***10 C.F.R. Part 431 and TP-2 procedures***:

Three Phase Efficiencies	
KVA Size	Efficiency
15	***97.90***
30	***98.25***
45	***98.39***
75	***98.60***
112.5	***98.74***
150	***98.81***
225	***98.95***
300	***99.02***
500	***99.09***
750	***98.16***
1000	***99.23***

1.5 BUCK-BOOST TRANSFORMER

A. Self-cooled dry type: continuous duty rating.

B. Ventilated enclosure NEMA 250 Type 2.

END OF SECTION

SECTION 262413

SWITCHBOARDS

GENERAL ***GUIDELINES***

1.1 SECTION INCLUDES

A. Qualitative requirements for switchboards and fusible bolted-pressure contact switch.

1.2 QUALITY ASSURANCE

A. Switchboards 600 v or less: NEMA PB-2.

B. NFPA 70 - National electrical Code

C. Underwriter's Laboratory

1.3 SWITCHBOARDS

A. Nominal system voltage, main bus continuous with uniform capacity for entire length of bus.

B. Short circuit rating of 65K, 100K, or 200K to meet or exceed application.

C. Low voltage circuit breakers to be continuous current, interrupting, and short-time current ratings for each circuit breaker suitable for use. Voltage and frequency ratings same as switchboard.

D. Fusible switch branch units.

E. Three-phase, four-wire configuration.

F. Front connected, front accessible with fixed main device, panel-mounted branches and sections front and rear aligned.

G. Tin plated copper or aluminum neutral and phase bussing.

H. Minimum .25 by 2 inch full length ground buss.

I. One hundred percent rated full length neutral buss.

J. Utility Metering Compartment: Acceptable to local utility company.

K. Integral fusible or circuit breaker type main switch.

L. NEMA 1 enclosure.

1.4 FUSIBLE BOLTED-PRESSURE CONTACT SWITCH

A. Labeled for use as service equipment.

B. Manual handle operation for opening and closing.

C. Contact interruption capability: twelve times switch rating.

D. Ground fault relay: comply with UL 1053.

E. Fused switch: NEMA KS 1 Type HD with clips to accommodate specified fuses.

1.5 INSTALLATION

A. Provide arc flash hazard label on equipment per the National Electrical Code.

1.6 MULTI-FUNCTION DIGITAL METERING MONITOR

A. Microprocessor-based unit.

B. Mounted flush or semi-flush in unit.

C. RS485 / RS232 and Modbus protocol digital communications output.

D. Monitoring functions including:

1. Phase currents each phase
2. Phase to phase voltages
3. Phase to neutral voltages
4. Megawatts – kilowatt hours
5. Megavars
6. Power factor
7. Power demand
8. Harmonics

END OF SECTION

SECTION 262416

PANELBOARDS

GENERAL ***GUIDELINES***

1.1 SECTION INCLUDES

A. Qualitative requirements for lighting and appliance branch circuit panelboards and distribution panelboards.

1.2 QUALITY ASSURANCE

A. Lighting and appliance branch circuit panelboards – NEMA PB 1.

B. Distribution Panelboards: NEMA PB.1.

C. NFPA 70 - National Electrical Code

D. Underwriter's Laboratory

1.3 LIGHTING AND APPLIANCE BRANCH CIRCUIT PANELBOARDS / DISTRIBUTION PANELBOARDS

A. Tin plated copper or aluminum phase and neutral bussing.

B. Integral ground bus.

C. Lighting and appliance branch circuit panelboards to be provided with circuit breaker type overcurrent protective devices with short circuit current available at terminals.

D. Distribution panelboards to be provided with fusible or circuit breaker type overcurrent protective devices with short circuit current rating available at terminals.

E. Mechanical type main and neutral lugs.

F. Feed-through lugs suitable for use with conductor material. Locate at opposite end of incoming lugs on main device.

G. Bus bars in lighting and appliance branch circuit panelboards and distribution panel assemblies shall be adequately braced to withstand the maximum short circuit current at the point of application.

1.4 INSTALLATION

A. Provide arc flash hazard label on equipment per the National Electrical Code.

END OF SECTION

SECTION 262419

MOTOR CONTROL CENTERS

GENERAL ***GUIDELINES***

1.1 SECTION INCLUDES

A. Qualitative requirements for motor control centers rated 600 V or less.

1.2 QUALITY ASSURANCE

A. NFPA 70 - National Electrical Code

B. Underwriter's Laboratory

1.3 MOTOR CONTROL CENTER

A. NEMA 250 Type 1 indoor enclosure.

B. Modular construction with individual doors.

C. Compartments constructed to allow for removal of units without opening adjacent doors.

D. Copper or tin plated aluminum bus.

E. Full size neutral bus.

F. Non-insulated equipment ground bus.

G. Phase, neutral, and ground buses to have same capacity the entire length.

H. Unit to have short circuit withstand rating shall as rating of section.

I. NEMA size 3 and smaller controllers shall be constructed with drawout mountings.

J. Equipment unit with controller to meet application as specified in specification section 262913.

1.4 INSTALLATION

A. Provide arc flash hazard label on equipment per the National Electrical Code.

END OF SECTION

SECTION 262726

WIRING DEVICES

GENERAL ***GUIDELINES***

1.1 SECTION INCLUDES QUALITATIVE REQUIREMENTS FOR:

A. High Capacity Floor Boxes

B. Duplex Receptacles and Integral GFCA Receptacles

C. Tamper-Resistant Duplex Receptacles

D. Wall Switches

E. Wall Switch Occupancy Sensors

F. Dimmer Switches

G. Poke Through Assemblies

H. Device Coverplates

1.2 QUALITY ASSURANCE

A. High Capacity Floor Boxes: Underwriter's Laboratory Listed.

B. Duplex Receptacles and Integral GFCA Receptacles: Underwriter's Laboratory 498, NEMA WD 1.

C. Tamper-Resistant Duplex Receptacles: NEMA WD 1, UL 498..

D. Wall Switches: NEMA WD 1, UL 20.

E. Wall Switch Occupany Sensors: Underwriter's Laboratory.

F. Dimmer Switches: UL 1472.

G. Poke Through Assemblies: Underwriter's Laboratory.

1.3 HIGH CAPACITY FLOOR BOXES

A. Stamped steel 8 gang 2 compartments units.

B. Fully adjustable.

C. Rectangular steel with carpet flange and carpet insert.

D. Blank aluminum plate where floor finish is not carpet.

1.4 DUPLEX RECEPTACLES AND INTEGRAL GFCI RECEPTACLES

A. 1-pole, 3 wire, grounding.

B. 20 amp, 125 volt rated.

C. Heavy Duty Specification grade, Duplex, back and side wired.

D. Ground fault protection where required shall be built into receptacle. Trippins values shall conform: UL 1436 and UL 943.

1.5 TAMPER-RESISTANT DUPLEX RECEPTACLES

A. 1-pole, 3 wire, grounding.

B. 20 amp, 125 volt rated.

C. Hospital grade.

1.6 WALL SWITCHES

A. 20 amp, 120/277 volt rated with ground screw.

B. Specification grade.

1.7 WALL SWITCH OCCUPANY SENSORS

A. Adaptive technology with adjustable time delay.

B. 180 degree field of view.

C. 1800 watts at 120-volt.

D. 4155 watts at 277-volt.

E. Passive infrared.

F. Push “on”-“off” occupant switch

1.8 DIMMER SWITCHES

A. Architectural grade, rotary knob series.

B. 120 volt, wattage as required by fixture wattage.

1.9 POKE THROUGH ASSEMBLIES

A. Factory fabricated.

B. Fire rated or non-fire rated assemblies.

C. Flush with floor type.

1.10 DEVICE COVERPLATES

A. Stainless steel jumbo size with U.S. 32D finish.

B. Configuration of plates to match devices.

C. Weatherproof type stainless steel with U.S. 32D finish on exterior mounted duplex receptacles.

1.11 PERFORMANCES

A. Provide receptacles on roof as required by National Electric Code.

B. Toggle type in classrooms and key type in public areas.

C. Provide tamper-resistant receptacles in pre-kindergarten and kindergarten classrooms.

END OF SECTION

SECTION 262813

FUSES AND FUSE HOLDERS

GENERAL ***GUIDELINES***

1.1 SECTION INCLUDES

A. Qualitative requirements for cartridge fuses rated 600 V and less and spare fuse cabinets.

1.2 QUALITY ASSURANCE

A. NFPA 70 - National Electrical Code

B. Underwriter's Laboratory

C. Cartridge Fuses: NEMA FU 1

1.3 CARTRIDGE FUSES

A. Fuses shall be nonrenewable cartridge type, noninterchangeable type.

B. Service entrance fuses shall be Class R or Class L rejection type, time delay, high interrupting, current limiting, dual element.

C. Feeder fuses shall be Class L or J time delay.

D. Motor branch circuit shall be NEMA Class "RK1" time delay.

E. Other branch circuits Class J time delay.

1.4 SPARE FUSE CABINET

A. Wall mounted steel constructed unit with hinged door and cam lock and pull.

B. Three spare fuses for each type and size.

END OF SECTION

SECTION 262816

ENCLOSED SWITCHES AND CIRCUIT BREAKERS

GENERAL ***GUIDELINES***

1.1 SECTION INCLUDES

A. Qualitative requirements for molded case circuit breakers, fusible and non-fusible switches, bolted-pressure contact switches, enclosures.

1.2 QUALITY ASSURANCE

A. Molded Case Circuit Breakers: UL 489, NEMA AB 1.

B. Fusible and Non-Fusible Switches, NEMA KS 1.

C. Bolted-Pressure Contact Switches UL 977.

D. Enclosures, NEMA AB 1 and NEMA KS 1.

E. NFPA 70 - National Electrical Code

1.3 MOLDED CASE CIRCUIT BREAKER

A. Interrupting capacity to meet available fault current at point of application.

B. Magnetic trip elements.

C. Lugs: Suitable for number, size, trip ratings, and conductor material.

D. GFCI Circuit Breakers: Single and two pole with 5mA trip sensitivity.

E. Type SWD for switching fluorescent lights.

F. Type HACR for heating, air conditioning, and refrigerant equipment.

G. Shunt trip: 120 v coil energized from separate circuit.

1.4 FUSIBLE AND NON-FUSIBLE SWITCHES

A. Fusible Switches, 1200 amp and Smaller: NEMA KS 1, Type HD (heavy duty) with lockable handle.

B. Non-fusible Switches: NEMA KS 1, Type HD (heavy duty) with lockable handle.

1.5 BOLTED-PRESSURE CONTACT SWITCHES

A. Labeled for use as service equipment.

B. Manual handle operation for opening and closing.

C. Contact interruptions capability: twelve times switch rating.

D. Ground fault relay comply with UL 1053.

1.6 ENCLOSURES

A. NEMA AB 1 and NEMA KS 1 to meet environmental conditions.
   1. Outdoor locations: NEMA 250 Type 3R
   2. Kitchen areas: NEMA 250 Type 4X, stainless steel.

1.7 INSTALLATION

A. Series rated circuit breaker not acceptable.

END OF SECTION

SECTION 262913

ENCLOSED CONTROLLERS

GENERAL ***GUIDELINES***

1.1 SECTION INCLUDES

A. Qualitative requirements for across-the-line, manual, and magnetic controllers; and reduced-voltage controllers.

1.2 QUALITY ASSURANCE

A. NFPA 70 - National Electrical Code

B. Underwriter's Laboratory

1.3 ACROSS-THE-LINE MANUAL CONTROLLERS

A. Manual controller with quick make or quick break toggle switch or push button.

B. General purpose Class A type.

C. Equipped with heaters and sensors in each phase matched to nameplate full-load current of motor.

1.4 ACROSS-THE-LINE MAGNETIC CONTROLLERS

A. Nonreversing across the line full voltage type.

B. NEMA ICS 2 Class A full voltage.

C. 120 volt control circuit obtained from integral control transformer.

D. Heavy duty type, hand/off/auto selector switch with pilot light and test push button.

E. Equipped with under voltage and phase-failure relays.

1.5 COMBINATION ACROSS-THE-LINE CONTROLLER / DISCONNECT

A. Nonreversing across-the-line full voltage type.

B. NEMA ICS 2 Class A full voltage.

C. 120 volt control circuit obtained from integral control transformer.

D. Heavy duty, fusible switch with rejection type fuses. NEMA KS 1.

E. Heavy duty type, hand/off/auto selector switch with pilot light and test push button.

F. Equipped with under voltage and phase-failure relays.

1.6 REDUCED-VOLTAGE ENCLOSED CONTROLLERS

A. Solid state controller suitable for use with polyphase induction motor.

B. Adjustable acceleration rate and adjustable starting torque control.

C. Surge suppressor in solid-state power circuit.

D. LED indicators showing motor and control status.

E. Heavy duty type, hand/off/auto selector switch with pilot light and test push button.

F. Equipped with under voltage and phase-failure relays.

1.7 ENCLOSURES

A. NEMA 250 Type 1 for indoor applications.

B. NEMA 250 Type 3R for outdoor applications.

C. NEMA 250 Type 1 for kitchen areas.

END OF SECTION

SECTION 263213

PACKAGE ENGINE GENERATORS

GENERAL ***GUIDELINES***

1.1 SECTION INCLUDES

A. Qualitative requirements for packaged engine generator system

1.2 QUALITY ASSURANCE

A. Compliance with NFPA 110

B. Factory testing

C. Field testing

D. NFPA 70 - National Electrical Code

E. UL 2200 – Stationary generators
UL 142 – Subbase fuel storage tanks

F. Installation of stationary generator - NFPA 37

1.3 PACKAGED GENERATOR SYSTEM CHARACTERISTICS

A. Type: Standby automatically started engine coupled to an AC generator unit.

B. Ratings: Voltage, frequency, and power output ratings suitable for use.

C. Maximum transfer time to assume full load: Per NEC.

D. Fuel type: Diesel or natural gas dependent upon application and authorities having jurisdiction.

E. Fuel supply: Minimum per NEC.

1.4 PACKAGED GENERATOR SYSTEM COMPONENTS

A. Engine

B. Cooling system: liquid-cooled unit mounted radiator.

C. Subbase diesel double wall fuel storage tank with leak monitor or natural gas supply.

D. For outdoor generator set provide weatherproof steel housing, louvers, and dampers.

E. Provide vibration isolators.

F. Critical type muffler/silencer.

END OF SECTION

SECTION 263600

TRANSFER SWITCHES

GENERAL ***GUIDELINES***

1.1 SECTION INCLUDES

A. Qualitative requirements for automatic transfer switch for packaged engine generators.

1.2 QUALITY ASSURANCE

A. NFPA 70 – National Electric Code.

B. NFPA 110 – Emergency and Standby Power Systems Level 1

C. NEMA ICS 1

1.3 AUTOMATIC TRANSFER SWITCH

A. Fault current and withstand ratings adequate for available fault currents.

B. Solid state controls.

C. Double-throw type, incapable of pauses or intermediate positions stops.

D. 3 pole (phase) switching type.

END OF SECTION

SECTION 264313

TRANSIENT VOLTAGE SUPPRESSION FOR LOW-VOLTAGE ELECTRICAL POWER CIRCUITS

GENERAL ***GUIDELINES***

1.1 SECTION INCLUDES
- A. Transient Voltage Surge Suppressors

1.2 QUALITY ASSURANCE
- A. NFPA 70 - National Electrical Code. Including article 285, NEC 2002.
- B. Underwriter's Laboratory
- C. Transient Voltage Surge Suppressors: UL 1449 2nd Edition and UL 1283, ANSI/IEEE C62.41 Category A, B, C, and C62.45 testing.
- D. NEMA LS-1

1.3 TRANSIENT VOLTAGE SURGE SUPPRESSORS
- A. Individually fused Metal oxide varistors (MOVs) or each mode of protection is to be protected with surge rated fuses and thermal disconnects.
- B. Line protection
  1. Line to line
  2. Line to neutral
  3. Line to ground
  4. Neutral to ground

- C. UL 1449 Edition suppressed voltage rating:

Voltage Configuration	L-N	L-G	N-G	L-L
120/208 Three Phase Wye	400v	400v	400v	800v
277/480 Three Phase Wye	800v	800v	800v	1200v

- D. One percent variation in metal oxide varistors.
- E. LED indicator light.
- F. Rated as a UL 1283 electromagnetic interference filter.
- G. NEMA 1 rated enclosure.

1.4 SERVICE ENTRANCE
- A. Integral or external mounting.
- B. Minimum single surge current rating of 120k per node.

1.5 BRANCH PANELBOARD
- A. Integral or external mounting.
- B. Minimum single surge current rating of 80k per node.

1.6 INSTALLATION
- A. Install transient voltage surge suppressors on the load side of the main disconnect at the main switchboard and each branch circuit panelboard serving duplex receptacles. Utilize a spare 30 to 60a two or three pole breaker for TVSS disconnect.

END OF SECTION

SECTION 265100

INTERIOR LIGHTING

GENERAL GUIDELINES

1.1 SECTION INCLUDES

A. Qualitative requirements for interior lighting fixtures, lamps and ballast, emergency lighting units, exit sign, and lighting fixture support.

1.2 QUALITY ASSURANCE

A. Underwriter's Laboratory

B. NFPA 70 - National Electrical Code

C. Fluorescent fixtures UL 1598.

D. Explosionproof fixtures UL 844.

E. Track lighting UL 1574.

F. Exit signs UL 924.

G. Emergency lighting UL 924.

H. Solid state lighting (LED) UL 1598.

1.3 FLUORESCENT INTERIOR LIGHTING FIXTURES

A. Fluorescent Troffers
1. Static Recessed 2 by 4 foot, 2 by 2 foot, or 1 by 4 foot
2. .125 inch Prismatic virgin acrylic A12 lens
3. Flat steel door
4. Number of lamps as required
5. Steel construction

B. Fluorescent Troffers – Specular Reflector
1. Static recessed 2 foot by 4 foot, 2 foot by 2 foot, or 1 foot by 4 foot
2. 0.125 inch prismatic virgin acrylic A12 lens
3. Flat steel door
4. 0.020 inch aluminum reflector, 92% specular, 3% diffuse
5. Number of lamps as required
6. Steel construction

C. Fluorescent Wraparound Fixtures
1. One piece acrylic prismatic
2. Number of lamps as required
3. Four foot length
4. Steel construction
5. Surface or suspended mounting

D. Fluorescent Strip Fixtures
   1. No lenses
   2. Four foot length
   3. Asymmetric or Symmetric reflectors as required.
   4. Steel construction

E. Fluorescent Recessed Cans
   1. Minimum 6 inch diameter
   2. Clear alzak reflector
   3. Compact fluorescent
   4. Open lens unless required.

F. ***Deleted***

G. Fluorescent Recessed Indirect/Direct
   1. Static recessed by 2 by 4 foot, 2 by 2 foot
   2. Perforated metal round shield
   3. Number of lamps as required
   4. Matte white aluminum reflector
   5. Steel housing construction

H. Fluorescent Pendant High-Bays
   1. 15 inch minimum round
   2. Steel stem or aircraft cable support
   3. Open or enclosed bottom
   4. UV stabilized prismatic acrylic reflector
   5. Die-cast aluminum ballast housing
   6. Compact fluorescent lamps
   7. Number of lamps as required
   8. Safety chain
   9. Wireguard

I. Interior Track Lighting
   1. Track
      a. Surface or recessed track
      b. Two circuit minimum
      c. Standard lengths with all fittings
   2. Fixtures
      a. Shape per Design Professional
      b. ***Dimmable LED***
      c. Color selection by design professional

J. High output Fluorescent High-Bay Industrial Fixtures
   1. Sizes
      a. 16” x 4’
      b. 2’ x 4’
      c. 16” x 8’
      d. 2’ x 8’
   2. Steel Construction
   3. No lens
   4. High output T5HO lamps

5. 95% reflectance segmented specular aluminum reflector
6. Full wireguard

K. Labels and Miscellaneous
1. Wet and damp location labels as required.
2. Provide wireguards on fixtures, exit signs, and emergency lighting in gymnasiums.

L. Installation
1. Chain hang troffer type fixtures from structural steel independent of grid or screw attach fixtures to grid and grid support at each corner of grid.

1.4 TRACK LIGHTING

A. Types
1. Open front type
2. Round or flat back
3. Porcelain socket

1.5 SOLID STATE LIGHTING (LED) LUMINAIRES
A. Types
1. Recessed or surface mount
2. Comply with IES LM-79
3. CRI 75 minimum
4. Color consistency NEMA SSL 3
5. B50 rating at least 50,000 hours per IES LM-80

1.6 EXPLOSIONPROOF FIXTURES

A. Types
1. Comply with hazardous classification for its location per the National Electrical Code
2. Lamp type suitable for condition.

1.7 EMERGENCY LIGHTING UNITS

A. Type
1. Provide from fixtures above connected to emergency generator.

1.8 EXIT SIGNS

A. Type
1. Cast aluminum construction
2. Color by design professional
3. LED lamp type
4. Wireguards as required
5. Red lettering
6. Directional arrows

1.9 LINEAR FLUORESCENT BALLAST

A. Electronic type with maximum 10 percent total harmonic distortion.
B. Rapid start, instant start, or programmed start type.
C. Suitable for T8, T5, or T5HO lamps.
D. 95 percent minimum power factor.
E. Class A sound rating.
F. .71, .88, or 1.15 ballast factor.

1.10 DIMMABLE LINEAR FLUORESCENT BALLAST

A. Electronic type.
B. 100 percent to 5 percent dimming range.

1.11 COMPACT FLUORESCENT BALLAST

A. Electronic type with maximum 20 percent total harmonic distortion.
B. Programmed rapid start.
C. 95 percent minimum power factor.
D. 95 percent or higher ballast factor.
E. Class A sound rating.

1.12 DIMMABLE COMPACT FLUORESCENT BALLAST

A. Electronic type.
B. 100 percent to 5 percent dimming range.

1.13 DIGITAL ELECTRONIC DIMMING BALLAST

A. Provides a continuous 2-wire dimming signal.
B. Internal circuitry to limit inrush current.
C. Operating voltages of 120/240/277 volts at 50 or 60 Hz.
D. Continuous flicker free dimming range from 100% to 10%.
E. Capable of connecting one or multiple sensors.
F. Capable of generating digital communication commands to digital bus.
G. Capable of monitoring lamp and ballast conditions.
H. Total harmonic distortion (THD) less than 20%.
I. Power factor greater than 95%.
J. Ballast factor greater than 85% for T8 lamps and equal to 1.0 for T5 and T5HO lamps.

1.14 FLUORESCENT LAMPS

A. T8 rapid-start low-mercury lamps, rated 32 W maximum, nominal length of 48 inches, 2950 initial lumens (minimum), CRI 85 (minimum), color temperature ***of 4100K*** and average rated life 30,000 hours, unless otherwise indicated.

B. T8 rapid-start low-mercury lamps, rated 17 W maximum, nominal length of 24 inches, 1350 initial lumens (minimum), CRI 85 (minimum), color temperature ***of 4100K*** and average rated life 20,000 hours, unless otherwise indicated.

C. T8 rapid-start low-mercury lamps, rated 28 W maximum, nominal length of 18 inches, 2725 initial lumens (minimum), CRI 85, color temperature ***of 4100K*** and average rated life 36,000 hours, unless noted otherwise.

D. T8 rapid-start low-mercury lamps, rated 32 W maximum, nominal length of 48 inches, 3100 initial lumens (minimum), CRI 85, color temperature ***of 4100K*** and average rated life of 36,000 hours, unless rated otherwise.

E. T5 rapid-start low-mercury lamps, rated 28 W maximum, nominal length of 45.2 inches, 2900 initial lumens (minimum), CRI 85 (minimum), color temperature ***of 4100K*** and average rated life 20,000 hours, unless otherwise indicated.

F. T5HO rapid-start high output low-mercury lamps, rated 54 W maximum, nominal length of 45.2 inches, 5000 initial lumens (minimum), CRI 85 (minimum), color temperature ***of 4100K*** and average rated life 20,000 hours, unless otherwise indicated.

G. Compact Fluorescent Lamps: 4-pin, low mercury, CRI 80 (minimum), color temperature ***of 4100K*** and average rated life of 10,000 hours at 3 hours operation per start, and suitable for use with dimming ballasts, unless otherwise indicated.
1. 13 W: T4, double or triple tube, rated 900 initial lumens (minimum).
2. 18 W: T4, double or triple tube, rated 1200 initial lumens (minimum).
3. 26 W: T4, double or triple tube, rated 1800 initial lumens (minimum).
4. 32 W: T4, triple tube, rated 2400 initial lumens (minimum).
5. 42 W: T4, triple tube, rated 3200 initial lumens (minimum).
6. 55 W: T4, triple tube, rated 4300 initial lumens (minimum).

1.15 LIGHT FIXTURES SUPPORT COMPONENTS

A. 1/4 inch minimum diameter thread steel rod hangers

B. ½ inch steel tubing with swivel ball fittings and ceiling canopy.

END OF SECTION

THIS PAGE HAS BEEN INTENTIONALLY LEFT BLANK.

SECTION 265561

THEATRICAL DIMMING SYSTEM

GENERAL ***GUIDELINES***

1.1 SECTION INCLUDES

A. Stage dimming and control.

B. Stage lighting.

1.2 QUALITY ASSURANCE

A. NFPA - National Electrical Code.

B. Underwriter's Laboratory.

C. Light Fixtures UL 1573.

D. Main Control Console UL 508.

1.3 MAIN CONTROL CONSOLE

A. Minimum 48 channel single scene microprocessor based.

B. Non-volatile memory disk backup.

C. Minimum 12 scene masters.

D. Console receptacles located at stage managers panel, at rear of cafetorium and in booth (if one is provided).

E. Minimum 10 foot cables for power and signal.

F. Tabletop unit.

1.4 DIMMER RACK

A. Dual 2400 watt dimmers.

B. Free standing rack mounted with cooling fan(s).

C. Primary circuit breaker with fault current rating for point of service.

D. Capable of data transmission with USITT DMX 512.

1.5 LIGHTING UNITS

A. Front Lighting (cafetorium ceiling)

1. Connector Strips: Approximately 4 inch by 4 inch with flush receptacles, hangers, interior terminal strip.

For School	Overall Dimmed Length Circuits	Number of Receptacles	Minimum Quantity
Middle 10’	Six each	Six each	Two
High 10’	Six each	Six each	Three

Locate at minimum the distance equal to proscenium height from the stage out onto the ceiling, centered on proscenium edges plus at proscenium center line for high school.

2. Lighting Instruments: Ellipsoidal spotlights, 6 inch by 20 degrees, 575 watt lamp, 36 inch leads, connector, color frame, safety cable, “C” Clamp.

For School	Minimum Quantity	Initial Location
Middle	Six	Three each connector strip
High	Nine	Three each connector strip

E. Overstage Lighting (Electrics): Should appear approximately 3 feet back, then at intervals of approximately eight feet.

1. Connector strips approximately 4 inch by 4 inch plus junction box, with receptacles on 18 inch pigtails, double pipe hangers. Provide additional (*) three receptacles at ends and center on a circuit switched at stage managers panel for worklights.

For School	Minimum overall Length	Dimmed Circuits	Number of Receptacles	Minimum Quantity
Middle	3/4 proscenium width	Twelve	Fifteen*	Two
High	3/4 proscenium width	Eighteen	Twenty-one*	Two

2. Additional Overstage: Third Electric (fourth electric if stage is more than 25 foot deep). Four, 4 circuit/receptacle plug boxes on flexible cables capable of reaching a point 5 feet above the stage floor.

3. Spotlights: Fresnel Spotlights: 6 inches, 750 watt lamp, 36 inch leads, connector, color frame, safety cable, “C” Clamp.

For School	Minimum Quantity	Initial Location
Middle	Twelve	Six each connector strip
High	Eighteen	Nine each connector strip

4. Striplights: 7'-6" x 4 circuit, with red, green, blue, and clear roundels, 200 watt lamps, 36 inch leads at each end with appropriate connectors.

For School	Minimum Quantity	Initial Location
Middle	Six	Three each connector strip
High	Six	Three each connector strip

5. Stage Worklights: Scoops: 10 inches, 150 watt lamp 36 inch leads, connector, color frame, safety cable, "C" Clamp.

For School	Minimum Quantity	Initial Location
Middle	Six	Three each connector strip
High	Six	Three each connector strip

C. Backstage Worklights:
   1. ***2700 Lumen Fluorescent or LED*** in industrial reflectors to limit spill onto the stage.
   2. Minimum two each side of either type stage.

1.6 MISCELLANEOUS

A. Provide stage managers panel to allow control of area lighting functions.

B. Provide a minimum of two floor pockets, one each side of the stage, each with three dimmed circuits/receptacles and one constant duplex receptacle.

1.7 INSTALLATION

A. Neutrals from system feed to be 130 percent of hot line size.

B. All branch circuits are to be two wire no common neutrals.

C. All strips and floor pockets shall be grounded per NEC.

END OF SECTION

SECTION 265600

EXTERIOR LIGHTING

GENERAL GUIDELINES

1.1 SECTION INCLUDES

A. Qualitative requirements for exterior luminaries with lamps and ballast; and poles.

1.2 QUALITY ASSURANCE

A. Underwriter's Laboratory

B. NFPA 70 - National Electrical Code

C. Luminaires UL 1598.

D. High intensity discharge (HID) ballast UL 1029.

E. Solid state lighting (LED) UL 1598

1.3 STRUCTURAL ANALYSIS CRITERIA FOR POLE SELECTION

A. Dead load weight of luminaire, supports, lowering devices as stated in AASHTO LTS-4.

B. Fixtures and poles shall be designed for wind load pressures conforming to the Ohio Basic Code.

1.4 LUMINAIRES

A. Listed and labeled for installation in wet location.

B. Metal parts free of burrs, sharp corners, and edges.

C. Constructed of corrosion-resistant aluminum.

D. Rigidly formed housings that provide weathertight and lighttight enclosures.

E. Stainless steel exposed hardware.

F. Doors and frames shall prevent accidental falling during relamping or ballast replacement.

G. Heat and aging-resistant reslient gasket to seal lenses to luminaire door.

1.5 FLUORESCENT BALLAST AND LAMPS

A. Low temperature ballast for reliable starting and operation of lamps to minus 20 degrees Fahrenheit.

B. Ballast to have less than 10 percent total harmonic distortion.

C. Electromagnetic ballast to be high power factor Class P.

D. Fluorescent lamps shall be low-mercury type and reliable starting and operation to minus 20 degrees Fahrenheit.

1.6 BALLAST FOR HID LAMPS

A. Constant wattage autotransformer or high power factor type.

B. Minimum starting temperature of minus 22 degrees Fahrenheit.

C. High pressure sodium ballast shall be electro magnetic type with solid state igniter/starter and minimum starting temperature of minus 40 degrees Fahrenheit.

1.7 HID LAMPS

A. High-Pressure Sodium Lamps: ANSI C78.42, CRI 21 (minimum), color temperature 1900K, and average rated life of 24,000 hours, minimum.

B. Metal-Halide Lamps: ANSI C78.1372, with a minimum CRI 65, and color temperature 4000 K.

C. Pulse-Start Metal-Halide Lamps: Minimum CRI 65, and color temperature 4000 K.

D. Ceramic, Pulse-Start, Metal-Halide Lamps: Minimum CRI 80, and color temperature 4000 K.

1.8 SOLID STATE LIGHTING (LED) LUMINAIRES

A. Wall or pole mounted

B. Comply with IES LM-79

C. CRI 75 minimum

D. Color consistency NEMA SSL 3

E. B50 rating at least 50,000 hours per IES LM-80

1.9 DRIVERS FOR SOLID STATE LIGHTING (LED) LUMINAIRES

A. Comply with ANSI 82.11

B. UL 935 approved

C. 100 to 277-volt input rating

D. 24v DC output rating

E. Power Factor: .90 or higher

1.10 POLES

A. Structural Characteristics: Comply with AASHTO LTS-5.

1.11 STEEL POLES

A. Poles complying with ASTM A 500 Grade B carbon steel with minimum yield of 46,000 psig.

B. One piece construction.

C. Weld ½ inch threaded lug for grounding conductor connections.

D. Vibration dampeners for Mode 1 and Mode 2

E. Factory-painted finish.

1.12 ALUMINUM POLES

A. Poles complying with ASTM B429 / B429M constructed with extruded seamless 6063 alloy.

B. Heat treated full length shaft to produce a T6 temper.

C. 1/2” threaded lug for grounding conductor connections.

D. A356 aluminum anchor base welded to shaft.

E. Vibration dampeners for Mode 1 and Mode 2.

F. Integrally-colored or electrolytically deposited color coating complying with AAMA 611.

1.13 FIBERGLASS POLES

A. 65% fiberglass with resin.

B. Resin color uniform throughout entire wall thickness UV inhibited.

C. Direct embedded along pedestrian walkways.

D. Concrete base mounted in vehicular traffic areas.

1.14 CONCRETE POLES

A. Poles: Manufactured by centrifugal spin-casting process or of cast concrete.

B. Cure with wet steam and age for a minimum of 15 days before installation.

C. Fabricate poles with a hard, non-porous surface that is resistant to water, frost, and road and soil chemicals and that has a maximum water-absorption rate of 3 percent.

END OF SECTION

See additional resources for updates

27 DIVISION COMMUNICATIONS

See additional resources for updates

TABLE OF CONTENTS

DIVISION 27: COMMUNICATIONS

270526 Grounding and Bonding for Communications Systems
271100 Communications Equipment Room Fittings
271313 Communications Copper Backbone Cabling
271323 Communications Optical Fiber Backbone Cabling
271513 Communications Copper Horizontal Cabling
271543 Audio-Video Communications Horizontal Transport System
272100 Data Communications Network Equipment
272133 Data Communications Wireless Access Points
273113 IP-Enabled PABX System
273123 IP Only PABX System
274119 Video Display Equipment
274125 Digital Media Management System
275121 Student Dining / Auditeria Sound Reinforcement System – High School
275122 Student Dining / Cafeteria Sound Reinforcement System
275123 Central Sound and Paging System
275124 Gymnasium Sound Reinforcement System
275125 Music Room Audio Program Playback System - Middle School
275126 Music Room Audio Recording/Playback System - High School
275127 Classroom Sound Reinforcement System
275313 Clock Systems

See additional resources for updates

SECTION 270526

GROUNDING AND BONDING FOR COMMUNICATIONS SYSTEMS

GENERAL GUIDELINES

1.1 SUMMARY

A. This Section defines the general design requirements for a uniform Telecommunications Grounding and Bonding infrastructure that shall be followed for all OSFC Technology construction projects.

1. Figure 1 describes the Telecommunications Bonding System

2. Refer to Section 8500, Technology Systems, and Section 8600, Electrical Systems, for additional information.

1.2 SECTION INCLUDES

A. Telecommunications Main Grounding Busbar (TMGB)

B. Telecommunications Grounding Busbar (TGB)

C. Telecommunications Bonding Backbone (TBB) ***– optional.***

1.3 QUALITY ASSURANCE

A. All equipment shall be UL listed.

B. All equipment and Installation Practices shall comply with the latest ANSI/NFPA-70 National Electric Code.

C. All equipment Installation Practices shall comply with the Local Electric Code.

D. All equipment Installation Practices shall comply with the latest ANSI/TIA/EIA-758 Customer Owned Outside Plant Standard.

E. All equipment shall comply with the latest ANSI-J-STD-607 Commercial Building Grounding (Earthing) and Bonding Requirements for Telecommunications Standard.

F. All equipment and Installation Practices shall comply with the latest BICSI Telecommunications Distribution Methods Manual (TDMM).

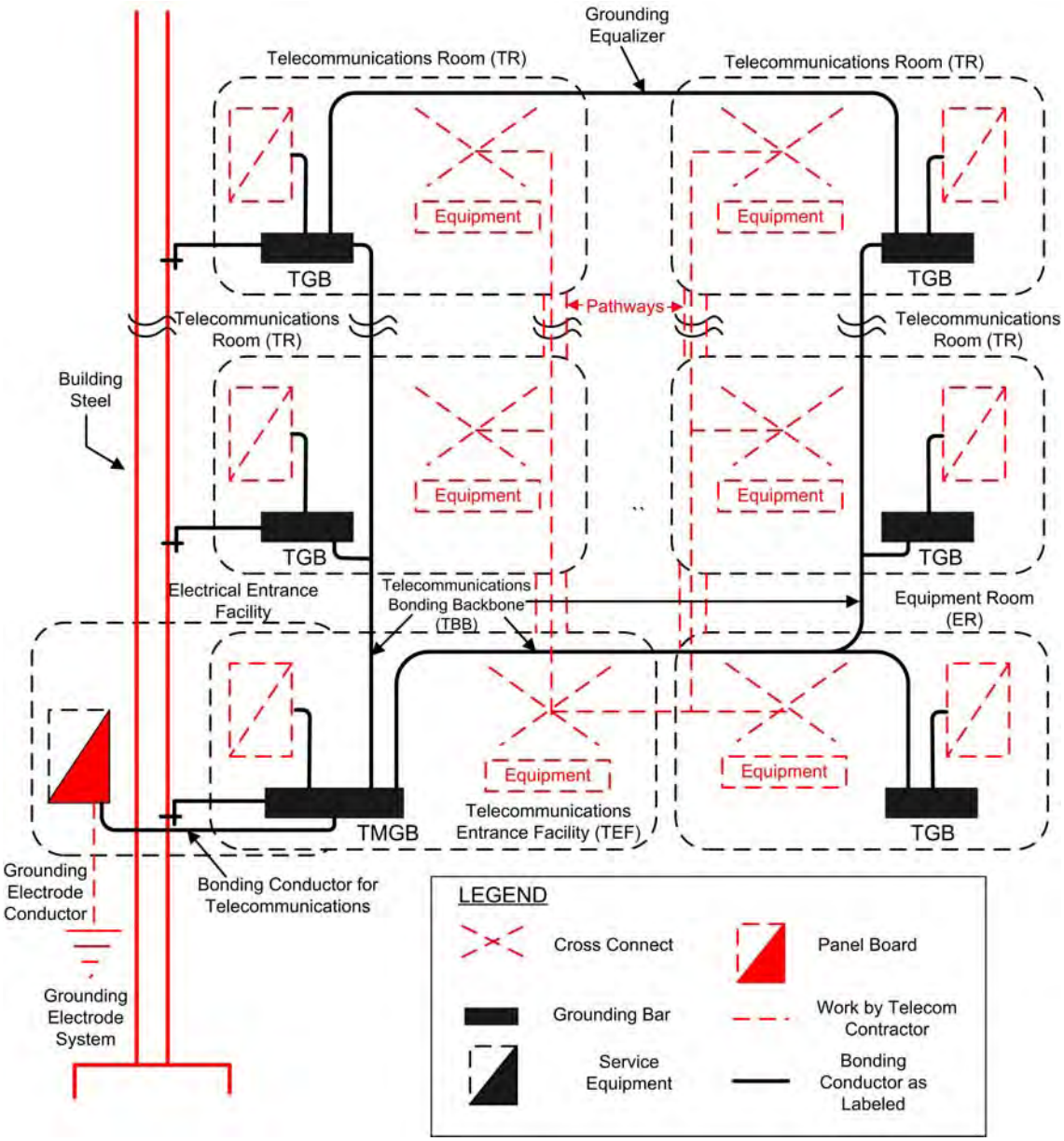

Figure 1 – Telecommunications Bonding System

1.4 TELECOMMUNICATIONS MAIN GROUNDING BUSBAR (TMGB)

A. Provide Telecommunications Main Grounding Busbar (TMGB) in Main Equipment Room (ER) and Telecommunications Room (TR).

B. All TMGB Connections to be made with double-bolted, Compression style, Grounding Lugs.

1.5 TELECOMMUNICATIONS GROUNDING BUSBAR (TGB)

A. Provide Telecommunications Grounding Busbar (TGB) in all Telecommunications Rooms (TRs) and AV Equipment Cabinets.

B. All TGB Connections to be made with double-bolted, Compression style, Grounding Lugs.

1.6 TELECOMMUNICATIONS BONDING BACKBONE (TBB) - OPTIONAL

A. Provide Telecommunications Bonding Backbone (TBB) between all TGBs and the TMGB.

B. All TBB Connections to be made with double-bolted, Compression style, Grounding Lugs.

C. ***Where a TBB is provided, install in accordance with BICSI Telecommunications Design Method Manual chapter 9 (Bonding and Grounding).***

1.7 GROUNDING/BONDING CONDUCTORS

A. All Grounding and bonding conductors shall be copper and may be insulated. When Conductors are insulated, they shall be listed for the application. The minimum bonding conductor shall be No. 6 AWG.

1.8 INSTALLATION

A. As a minimum, Bond TMGB to following:

1. Building Steel, (minimum No. 2 AWG insulated copper bonding conductor). CAD Weld Bonding Conductors to Building Steel.

2. Main Electrical Service Grounding Electrode System (minimum No. 2 AWG insulated copper bonding conductor).

3. Local Service Panel Ground (minimum No. 6 AWG insulated copper bonding conductor).

4. Telecommunications Bonding Backbone (TBB) that connects TMGB to other TGBs (***size per BICSI TDMM***) **–** optional.

5. Associated Telecommunications Cable Tray(s) (continuous No. 6 AWG bare copper bonding conductor connecting all Cable Tray Sections).
6. Telecommunications Conduit(s) Entering TR (minimum No. 6 AWG insulated copper bonding conductor).

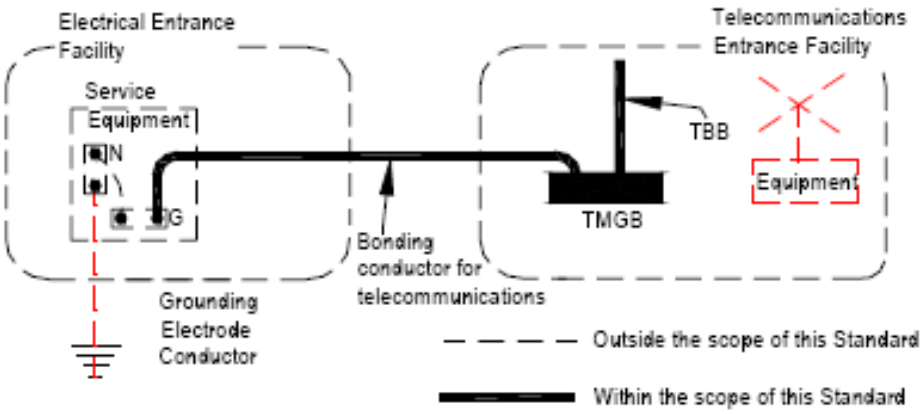

Figure 3 – Connection to Grounding Electrode

B. As a minimum, Bond TGB to following:

1. Building Steel, (minimum No. 2 AWG insulated copper bonding conductor). CAD Weld Bonding Conductors to Building Steel.

2. Local Service Panel Ground (minimum No. 6 AWG insulated copper bonding conductor).

3. Telecommunications Bonding Backbone (TBB) that connects TGB to other TGBs and TMGB (***size per BICSI TDMM***) - Optional.

4. Associated Telecommunications Cable Tray(s) (continuous No. 6 AWG bare copper bonding conductor connecting all Cable Tray Sections).

5. Telecommunications Conduit(s) Entering TR (minimum No. 6 AWG insulated copper bonding conductor).

C. As a minimum, the Technology Contractor shall bond the following devices to the associated TMGB and TGBs using a minimum No. 6 AWG insulated copper bonding conductor using compression style lugs:

1. Antenna Cable Shields
2. Backbone Cable Shields
3. CATV Equipment
4. Coupled Bonding Conductors (CBCs)
5. Equipment Racks and Cabinets
6. Lightning and Surge Protectors
7. PABX Equipment
8. Raised Floors
9. Telecommunication and Fiber Cable Shields
10. Telecommunications Devices
11. TR Cable Ladder and Tray

END OF SECTION

See additional resources for updates

SECTION 271100

COMMUNICATIONS EQUIPMENT ROOM FITTINGS

GENERAL ***GUIDELINES***

1.1 GENERAL

A. This Section defines the general design requirements for a uniform Communications Room Infrastructure that shall be followed for all OSFC Technology construction projects.
   1. Communications Rooms consist of:
      a. Main Equipment Room (ER)
      b. Telecommunication Rooms (TR)
   2. Figure 1 describes a typical Communications Room
   3. Refer to Section 8500, Technology Systems, and Section 8600, Electrical Systems, for additional information.

1.2 SECTION INCLUDES

A. Equipment Room (ER)

B. Telecommunication Rooms (TR)

C. Equipment Backboards

D. Equipment Racks and Cabinets

E. Cable Ladder and Cable Tray

1.3 QUALITY ASSURANCE

A. All equipment shall be UL listed.

B. All equipment and Installation Practices shall comply with the latest ANSI/NFPA-70 National Electric Code.

C. All equipment Installation Practices shall comply with the Local Electric Code.

D. All equipment shall comply with the latest ANSI-J-STD-607 Commercial Building Grounding (Earthing) and Bonding Requirements for Telecommunications Standard.

E. All equipment and Installation Practices shall comply with the latest BICSI Telecommunications Distribution Methods Manual (TDMM).

F. All equipment Racks and Cabinets shall comply with the latest ANSI/EIA-310 Cabinets, Racks, Panels and Associated Equipment Standard.

See additional resources for updates

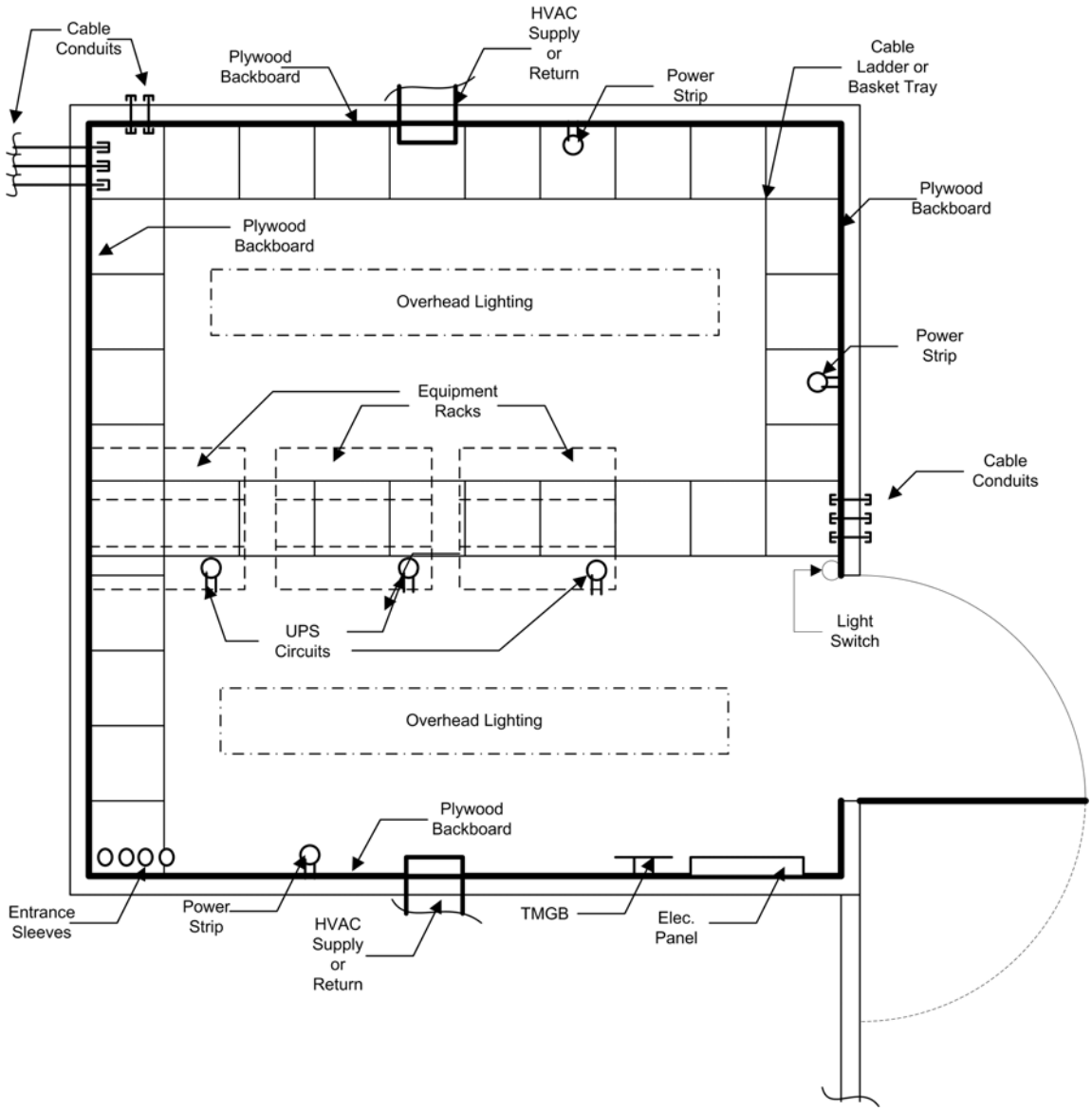

Figure 1 - Typical 10 ft x 10 ft Communications Room

1.4 EQUIPMENT ROOM (ER) GENERAL

A. Each Building shall be equipped with at least 1 ER

B. Locate the ER in a Central area of the Building.

C. For multiple story buildings, consider centrally locating the ER so it can serve multiple floors.

D. Extend Service Entrance Conduits to the ER

E. The ER typically contains the following equipment:

See additional resources for updates

1. ACTIVE EQUIPMENT
   a. Access Control Systems
   b. CATV Systems
   c. CCTV Systems
   d. Clock Systems
   e. Intercom Systems
   f. Network Electronics
   g. Paging Systems
   h. PBX Equipment
   i. Security Electronics
   j. UPS Systems
   k. Video Systems
   l. Voice Mail Systems
   m. Wireless Electronics

2. CROSS-CONNECT EQUIPMENT
   a. Racks
   b. Cabinets
   c. Patch Panels
   d. Backboards
   e. 110 Blocks

3. BUILDING FACILITIES EQUIPMENT
   a. Associated HVAC Equipment
   b. Associated Electrical Equipment

1.5 TELECOMMUNICATION ROOM (TR) GENERAL

A. When more than one Equipment Room (ER) is required, additional satellite Telecommunications Rooms (TRs) shall be provided.

B. Centrally locate the TRs in the areas being served.

C. For multiple story buildings, consider centrally locating the TRs so they can serve multiple floors.

D. The TR typically contains the following equipment:
   1. ACTIVE EQUIPMENT
      a. CATV Systems
      b. Network Electronics
      c. UPS Systems
   2. CROSS-CONNECT EQUIPMENT
      a. Racks
      b. Cabinets
      c. Patch Panels
      d. Backboards
      e. 110 Blocks
   3. BUILDING FACILITIES EQUIPMENT
      a. Associated HVAC Equipment
      b. Associated Electrical Equipment

E. Fiber and Copper Backbone cables shall be provided to interconnect the TR(s) with the ER.

1.6 ER AND TR REQUIREMENTS

A. ***Verify and coordinate ER/TR quantity, size and location with the Design Professional during the programming phase.***

1. ***Refer to the OSDM space plates for minimum SF requirements.***

2. ***Consider additional space requirements if district is considering thin client or N.O.C. applications.***

B. The minimum ER and TR minimum ceiling heights shall be 8 feet (2.4 m) above finished floor (AFF). Consideration should be given to 10 ft (3 m) ceilings.

C. The ER and TR shall be rectangular in shape.

D. Consolidate multiple floors and serving areas into a single TR whenever possible. For example, a centrally located TR on the 2nd floor could also serve the 1st and 3rd floor.

E. The ER and TR shall have tiled floors.

F. The ER and TR shall have at least one lockable door that opens outward and has minimum dimensions of 3 feet (0.91 m) wide by 6.7 feet (2.0 m) tall.

G. Provide each ER and TR with an HVAC system that maintains continuous environmental control 24 hours per day, 365 days per year.

H. Maintain temperature between 64º F (18º C) to 75º F (24º C).

I. Maintain relative humidity between 30% and 55% -- non-condensing.

J. Provide Telecommunications Grounding Systems

K. Provide the following minimum clearances:

1. Minimum of 40 in. (1 m) between equipment racks and the front of cross-connect fields.
2. Allow a minimum of 6 in. (150 mm) from the wall for wall-mounted equipment.
3. Minimum of a 40 in. (1 m) aisle in front of and behind all equipment racks and cabinets.
4. Minimum of 36 in. (0.91 m) floor area depth for equipment racks and cabinets.

L. Provide sufficient Generator Electrical circuits to service the associated UPS units.

M. Power all active devices from UPS units, which are connected to the Building generator.

N. Provide a minimum of 500 lux (50-foot candles of uniform lighting when measured at 3 feet AFF.

O. Use light colored walls to enhance lighting.

1.7 EQUIPMENT BACKBOARDS

A. Cover at least two (2) walls with AC grade or better, void free ¾ in. (19 mm) plywood at least 8 feet (2.4 m) high.

B. Place the grade C surface towards the wall and coat the plywood with two coats of fire-retardant white paint.

1.8 EQUIPMENT RACKS

A. Place equipment racks or cabinets in a continuous row.

B. Equipment racks shall be black, 84 inches high, have 19 inch EIA, pre-tapped, mounting rails and shall have integral, 5 inch minimum, vertical cable organizers on both the left and right of the rack.

C. Equipment racks shall be provided with rear vertical cable organizers on both the left and right side of the rack.

D. Provide at least one 4-posted rack or equipment cabinet in the ER for placing file servers and other equipment requiring four-corner mounting.

E. Equipment racks are the preferred equipment-mounting device.

F. When equipment cabinets are furnished, they shall be black, have vented side panels and lockable front and back doors. ***Provide ventilation fans as required for active equipment.*** Cabinets shall be a minimum of 24 inches (610 mm) wide by a minimum of 42 in. (1.07 m) deep and 84 in. (2.15 m) high.

G. All equipment racks and cabinets shall be of the same manufacturer and model type.

1.9 CABLE LADDER AND CABLE TRAY

A. Line the walls of the ER and TR with a minimum of 12 in (305 mm) wide cable ladder or wire basket cable tray for cable management.

B. Provide a minimum of 12 in (305 mm) wide cable ladder or wire basket cable tray over the tops of racks and cabinets for cable management.

C. Provide waterfall support structure to assure proper cable bend radius.

Figure 2 -- Typical Communications Room Cable Conduits

See additional resources for updates

Figure 3 -- Typical Communications Room Overhead Cable Ladder and Backboard

1.10 GENERAL

A. All racks, patch panels, cables, jacks, system components, etc. shall be labeled according to ANSI/EIA/TIA-606 specifications and in coordination with the District/architect.

B. Coordinate the location of lighting equipment so that fully loaded cable trays and ladder do not impede or obstruct the lighting.

END OF SECTION

See additional resources for updates

SECTION 271313

COMMUNICATIONS COPPER BACKBONE CABLING

GENERAL ***GUIDELINES***

1.1 GENERAL

A. This Section defines the general design requirements for a uniform Intra and Inter-Building Communications Copper Backbone Cabling Infrastructure that shall be followed for all OSFC Technology construction projects.

1. Figures 1, 2 and 3 describe a typical Intra-Building Communications Copper Backbone Cabling Systems

2. Figure 4 describes a typical Inter-Building Communications Copper Backbone Cabling System

3. Refer to Section 8500, Technology Systems, and Section 8600, Electrical Systems, for additional information.

1.2 SECTION INCLUDES

A. INTRA-BUILDING COPPER BACKBONE CABLE SYSTEMS

1. Main Equipment Room (ER) to Telecommunication Rooms (TR) Voice Backbone Cable System.

2. Main Equipment Room (ER) to Telecommunication Rooms (TR) Data Backbone Cable System.

3. Entrance Facility (EF) to Main Equipment Room (ER) Voice Backbone Cable System.

4. Entrance Facility (EF) to Main Equipment Room (ER) Data Circuit Backbone Cable System.

B. INTER-BUILDING COPPER BACKBONE CABLE SYSTEMS

1. Main Equipment Room (ER) to Main Equipment Room (ER) Voice Backbone Cable System.

1.3 QUALITY ASSURANCE

A. All equipment shall be UL listed.

B. All equipment and Installation Practices shall comply with the latest ANSI/NFPA-70 National Electric Code.

C. All equipment Installation Practices shall comply with the Local Electric Code.

D. All equipment shall comply with the latest ANSI-J-STD-607 Commercial Building Grounding (Earthing) and Bonding Requirements for Telecommunications Standard.

E. All equipment and Installation Practices shall comply with the latest BICSI® Telecommunications Distribution Methods Manual (TDMM) and BICSI® Customer-Owned Outside Plant Design Manual.

F. All equipment shall comply with the latest ANSI TIA/EIA-568, 569, 606, 607, Standards.

G. All Inter-Building cabling shall comply with the latest ANSI/TIA/EIA-758. Customer-Owned Outside Plant Telecommunications Cabling, Standard, as applicable.

H. All Inter-Building cabling shall comply with the latest ANSI/ICEA S-98-688. Broadband Twisted-Pair, Telecommunications Cable Aircore, Polyolefin Insulated Copper Conductors, Standard, as applicable.

I. All Inter-Building cabling shall comply with the latest ANSI/ICEA S-99-689. Broadband Twisted-Pair, Telecommunications Cable Filled, Polyolefin Insulated Copper Conductors, Standard, as applicable.

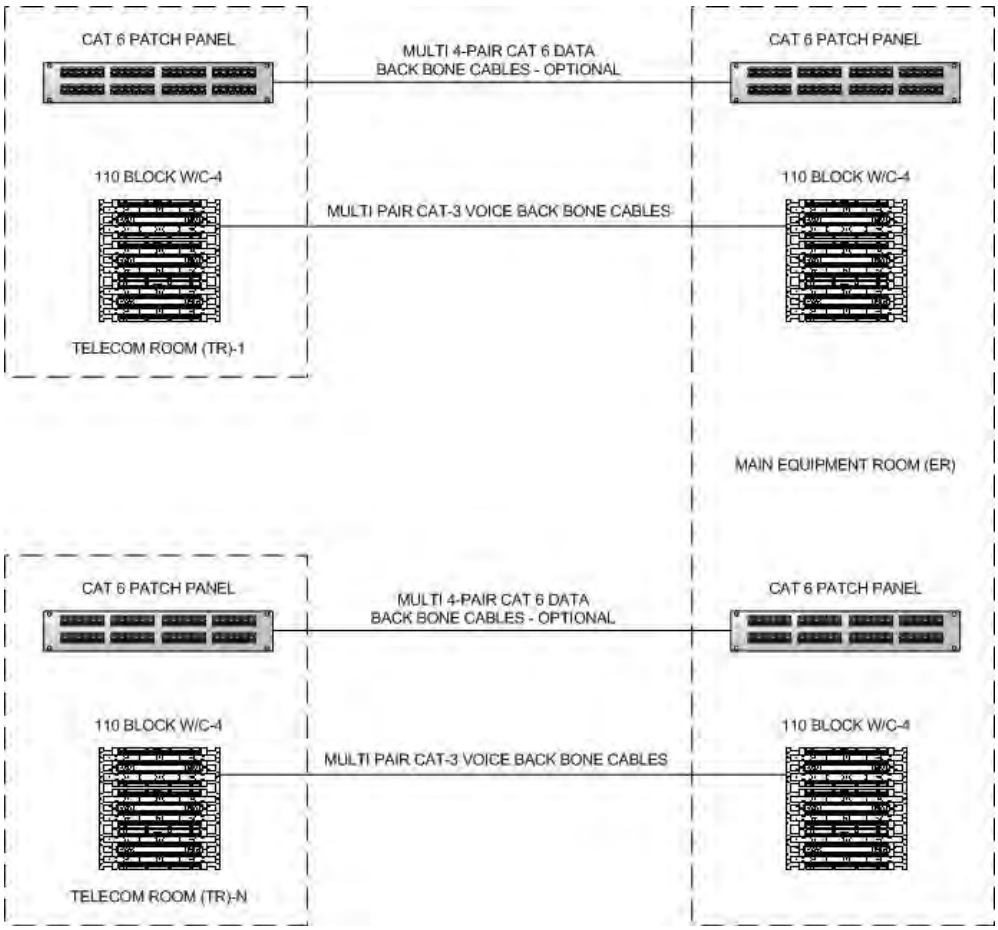

Figure 1 – Main Equipment Room (ER) to Telecommunication Rooms (TRs) Data and Voice Backbone Cable System, Option - 1

See additional resources for updates

Figure 2 – Main Equipment Room (ER) to Telecommunication Rooms (TRs) Data and Voice Backbone Cable System, Option – 2

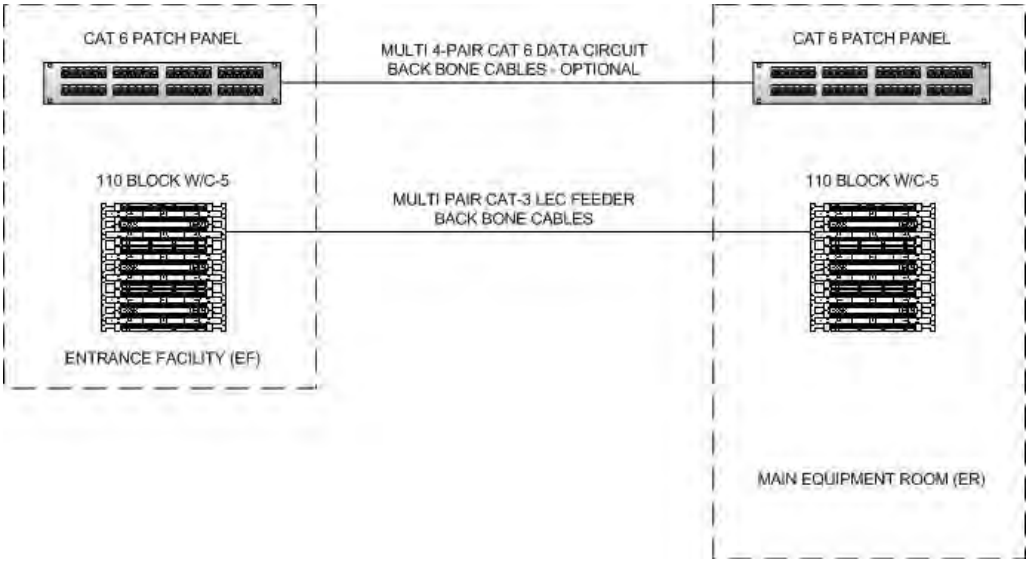

Figure 3 – Entrance Facility (EF) to Main Equipment Room (ER) Data Circuit and Voice Backbone Cable System

See additional resources for updates

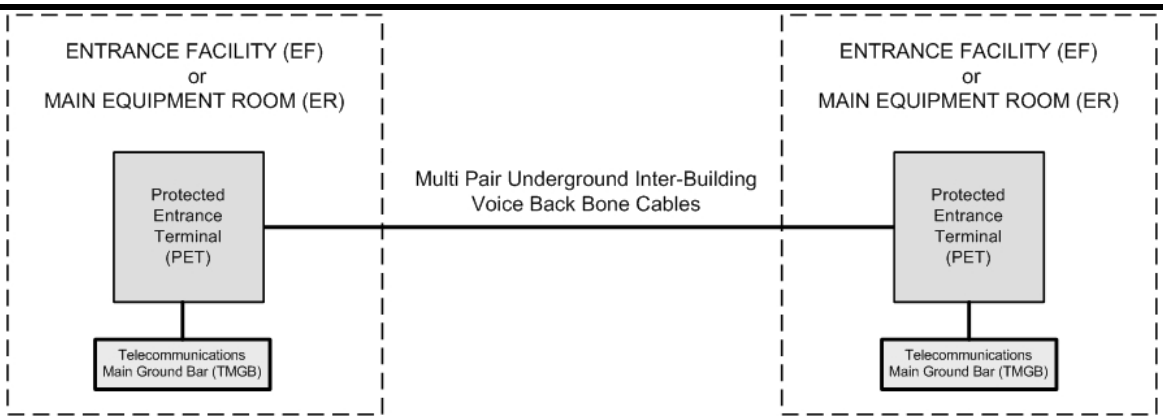

Figure 4 – Main Equipment Room (ER) to Main Equipment Room (ER) Inter-Building Voice Backbone Cable System

1.4 WARRANTY

A. System shall carry an industry standard, performance based warranty, by the manufacturer and contractor, for a period of at least 20 years on the complete cabling system; including patch panels, patch cables, terminations and labor. The remaining portions of the system shall be warranted for a period of three (3) years from date of substantial completion.

1.5 INTRA-BUILDING COPPER BACKBONE CABLE SYSTEMS

A. MAIN EQUIPMENT ROOM (ER) TO TELECOMMUNICATION ROOMS (TR) VOICE BACKBONE CABLE SYSTEM

1. When the School has a Traditional IP-Enabled PBX Phone System, provide a multi-pair CAT-3 Voice Backbone system between the ER and the associated TRs, sufficient to serve all voice stations with 2 pairs in the backbone.

2. When the School has an all-IP Phone System, a minimal 25-pair CAT-3 Voice Backbone is recommended ***but*** not required.

3. Provide a minimum of one (1) 100-pair cable between the ER and each associated TR. Equip cables in increments of 100 pairs. For TE/TR serving less than 24 users, provide a minimum 50 pair cable.

4. Provide a minimum of one (1) pair per associated TR telephone outlet with 50% spare capacity.

5. Terminate 100-pair cables on 110 Blocks using C-4 Clips or ***Cat-6***, rack-mounted, patch panels as minimum 2-pair circuits – See figures 1 and 2 above.

B. MAIN EQUIPMENT ROOM (ER) TO TELECOMMUNICATION ROOMS (TR) DATA CIRCUIT BACKBONE CABLE SYSTEM - OPTIONAL

1. Provide a minimum of six (6) four-pair, ***Cat-6*** cables to match category rating of data cables between the ER and each associated TR.

2. Terminate the cables on ***Cat-6***, rack-mounted, Patch panels at each end. – See figures 1 and 2 above.

C. ENTRANCE FACILITY (EF) TO MAIN EQUIPMENT ROOM (ER) VOICE BACKBONE CABLE SYSTEM

1. Separate Entrance Facilities (EF) are generally encountered during renovations to existing buildings and are not recommended for new construction. For new construction, co-locate the Entrance Facility (EF) in the Main Equipment Room (ER).

2. When the Entrance Facility is not co-located in the Main Equipment Room (ER), provide a multi-pair CAT-3 Voice Backbone system between the EF and the ER, for the extension of voice, FAX and alarm circuits provided by the Service Provider (SP).

3. Provide a minimum of one (1) 100-pair cable between the EF and each associated ER. Equip cables in increments of 100 pairs.

4. Terminate LEC Feeder, 100-pair cables on 110 Blocks using C-5 Clips at both ends. – See figure 3 above.

D. ENTRANCE FACILITY (EF) TO MAIN EQUIPMENT ROOM (ER) DATA CIRCUIT BACKBONE CABLE SYSTEM

1. When the Entrance Facility is not co-located in the Main Equipment Room (ER) provide a minimum of six (6) four-pair, ***Cat-6*** cables between the EF and the ER for the extension of special circuits (T-1, PRI, etc.) provided by the Service Provider (SP) - Optional.

2. Terminate the cables on a ***Cat-6***, wall-mounted, Patch panel at the EF end and on a ***Cat-6***, wall-mounted or rack-mounted patch panel at the ER end. – See figure 3 above.

3. Terminate LEC Feeder, 100-pair cables on 110 Blocks using C-5 Clips at both ends. – See figure 4 above.

1.6 INTER-BUILDING COPPER BACKBONE CABLE SYSTEMS

A. MAIN EQUIPMENT ROOM (ER) TO MAIN EQUIPMENT ROOM (ER) VOICE BACKBONE CABLE SYSTEM

1. When multiple School Buildings are located on the same campus, and served by a common IP-Enabled Phone System, provide a multi-pair, underground or aerial telecommunications cable between the ER or EF of the building containing the common Phone System and the ER or EF of each of the associated satellite buildings.

2. Provide a minimum of 25 pairs.

3. Provide a minimum of one pair for each active telephone outlet in the associated satellite building.

4. Provide a minimum of 25 % spare pairs for growth.

5. When the School has an all-IP Phone System, the multi-pair inter-building Voice Backbone is optional. In cases where only one Service Provider DEMARC is provided per campus, provide an inter-building Voice Backbone cable for 911 backup and alarm circuits.

6. Terminate the inter-building cables on Protected Entrance Terminals (PETs) at both ends. – See figure 4 above.

7. Provide Gas-Tube Protector Modules for all pairs at both ends.

8. Ground the Cable sheath and the PET to the associated Telecommunications Main Grounding Bus (TMGB) at both ends.

9. Depending on the application, provide metal protective sheaths and appropriate rodent protection devices for aerially installed Telecommunications cables.

1.7 INSTALLATION

A. All cabling shall be installed according to ANSI/EIA/TIA specifications and BISCI standards.

B. All ***Cat-6*** cabling shall be terminated on ***Cat-6*** (minimum) patch panels and jacks as noted above.

C. All system multi-pair voice backbone cabling shall be terminated on ***Cat-6*** (minimum) patch panels or 110 style punch blocks as noted above.

D. Provide designated space on Telecommunications Backboard for location of Access Provider's (AP's) Service Entrance Cable Termination and Protection Point.

1.8 LABELING

A. All racks, patch panels, cables, jacks, system components, etc. shall be labeled according to ANSI/EIA/TIA-606 specifications and in coordination with the District/architect.

B. All cables shall be equipped with a self-laminating, wrap-around, machine printed label at both ends of the cable.

C. All Patch Panels shall be equipped with pre-printed, cable identification designation strips installed behind clear plastic label holders on the front of the patch panel.

1.9 TESTING

A. All ***Cat-6*** backbone cables shall be tested to ***Cat-6*** performance levels in accordance with ANSI/TIA/EIA-568-B.2 (or latest) specifications, using a Level III compliant tester.

B. All multi-pair, backbone cables shall be tested to Cat-3 (minimum) performance levels in accordance with ANSI/TIA/EIA-568-B.2 (or latest) specifications, using a Level III compliant tester.

See additional resources for updates

C. All multi-pair, inter-building backbone cables shall be tested to Cat-3 (minimum) performance levels in accordance with ANSI/TIA/EIA-568-B.2 (or latest) specifications, using a Level III compliant tester.

D. All Cable test results shall be stored and presented to the Architect in both hard copy and electronic format for approval.

E. All Cable Tester record designations shall match the associated cable label, and associated patch panel or 110-block label designation.

END OF SECTION

SECTION 271323

COMMUNICATIONS OPTICAL FIBER BACKBONE CABLING

GENERAL GUIDELINES

1.1 GENERAL

A. This Section defines the general design requirements for a uniform Intra and Inter-Building Communications Optical Fiber Backbone Cabling Infrastructure that shall be followed for all OSFC Technology construction projects.

1. Figure 1 describes a typical Intra-Building Communications Optical Fiber Backbone Cabling System

2. Figure 2 describes a typical Inter-Building Communications ***Optical Fiber*** Backbone Cabling System

3. Refer to Section 8500, Technology Systems, and Section 8600, Electrical Systems, for additional information.

1.2 SECTION INCLUDES

A. INTRA-BUILDING OPTICAL FIBER BACKBONE CABLE SYSTEMS
1. Main Equipment Room (ER) to Telecommunication Rooms (TR) Fiber Optic Backbone Cable System

B. INTER-BUILDING OPTICAL FIBER BACKBONE CABLE SYSTEMS
1. Main Equipment Room (ER) to Main Equipment Room (ER) Fiber-Optic Backbone Cable System

C. OPTICAL FIBER PATCH PANEL SYSTEMS
1. Fiber-Optic Patch Panels
2. Fiber-Optic Connectors
3. Fiber-Optic Splice Trays

1.3 QUALITY ASSURANCE

A. All equipment shall be UL listed.

B. All equipment and Installation Practices shall comply with the latest ANSI/NFPA-70 National Electric Code.

C. All equipment installation practices shall comply with the local electric code.

D. All equipment shall comply with the latest ANSI-J-STD-607 Commercial Building Grounding (Earthing) and Bonding Requirements for Telecommunications Standard.

E. All equipment and Installation Practices shall comply with the latest BICSI® Telecommunications Distribution Methods Manual (TDMM) and BICSI® Customer-Owned Outside Plant Design Manual.

See additional resources for updates

F. All equipment shall comply with the latest ANSI TIA/EIA-568, 569, 606, 607, standards.

G. All 62.5 micron, multi-mode fiber equipment shall comply with the latest American National Standards Institute/Telecommunications Industry Association/Electronic Industries Alliance Specification ANSI/TIA/EIA-492AAAA. Detail Specification for 62.5-µm Core Diameter/125-µm Cladding Diameter Class 1a Graded-Index Multimode Optical Fibers. Note: 62.5 micron is only for legacy systems.

H. All 50 micron, multi-mode equipment shall comply with the latest American National Standards Institute/Telecommunications Industry Association/Electronic Industries Alliance Specification ANSI/TIA/EIA-492AAAB. Detail Specification for 50-µm Core Diameter/ 125-µm Cladding Diameter Class 1a Multimode Graded-Index Optical Waveguide Fibers. 50 micron fiber shall be OM4 laser optimized with support for 10 GB serial at 500m.

I. All single-mode equipment shall comply with the latest American National Standards Institute/Telecommunications Industry Association/Electronic Industries Alliance Specification ANSI/TIA/EIA-492CAAA. Detail Specification for Class IVa Dispersion—Unshifted Single-Mode Optical Fibers.

1.4 SYSTEM WARRANTY

A. System shall carry an industry standard, performance based warranty, by the manufacturer and contractor, for a period of at least 20 years on the fiber-optic cabling; including patch panels, patch cables, terminations and labor. The remaining portions of the system shall be warranted for a period of ***three (3) years*** from date of substantial completion.

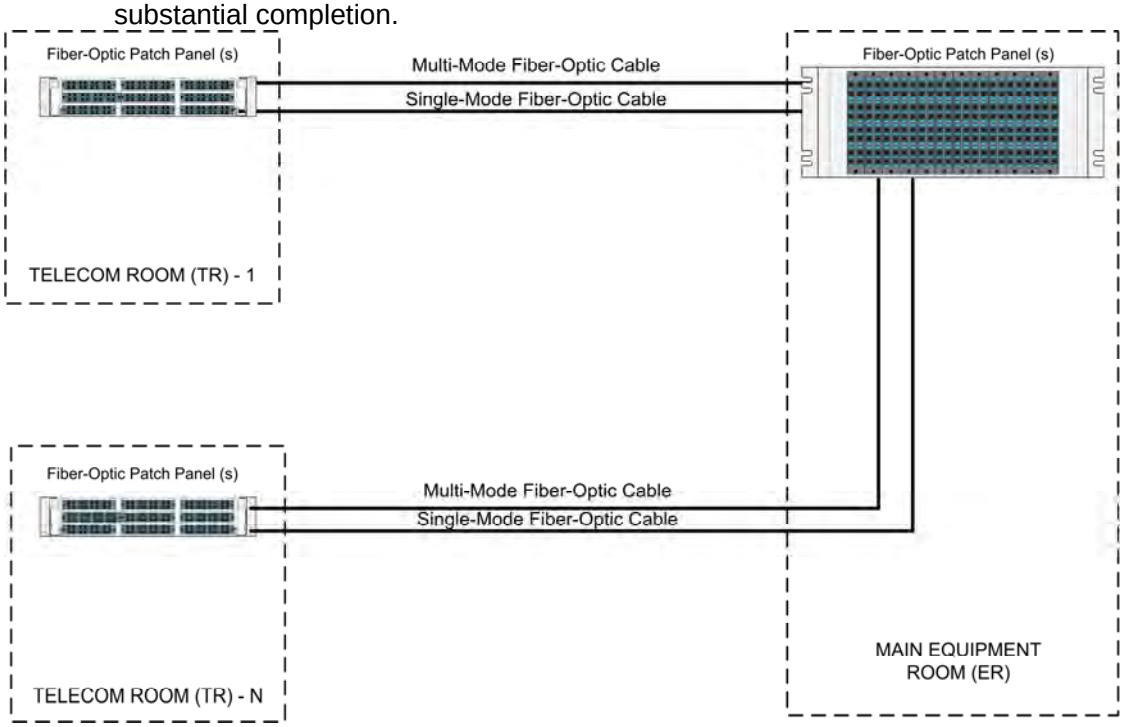

Figure 1 – Main Equipment Room (ER) to Telecommunication Rooms (TRs) Fiber-Optic Backbone Cable System

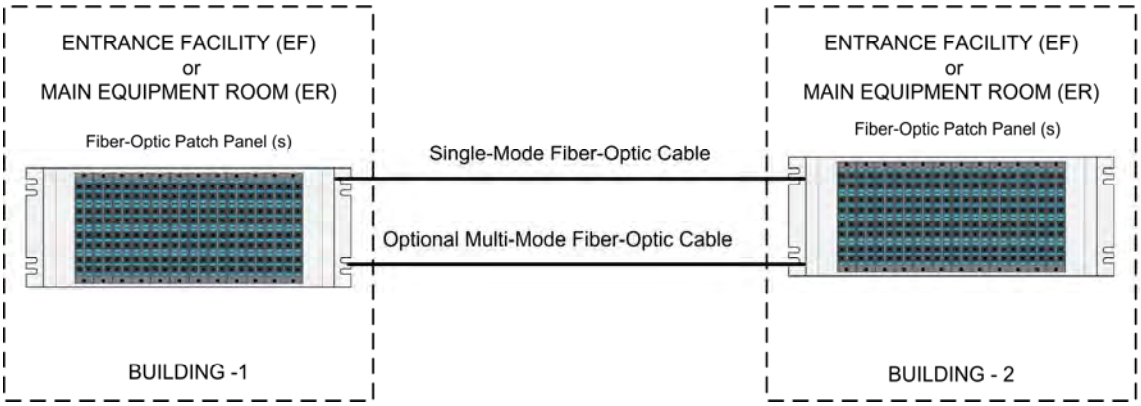

Figure 2 – Main Equipment Room (ER) to Main Equipment Room (ER) Inter-Building Fiber-Optic Backbone Cable System

1.5 INTRA-BUILDING OPTICAL FIBER BACKBONE CABLE SYSTEMS

A. MAIN EQUIPMENT ROOM (ER) TO TELECOMMUNICATION ROOMS (TR) FIBER-OPTIC BACKBONE CABLE SYSTEM

1. GENERAL

a. Provide a multi-mode and single-mode Optical Fiber Backbone System for all new and renovated Buildings when the building contains more than one (1) Telecommunications Closet.

b. Upgrade existing Optical Fiber Backbone Systems to the following requirements.

c. Ground the Cable sheath of aerial fiber-optic cables to the associated Telecommunications Main Grounding Bus (TMGB) at both ends.

d. Depending on the application, provide metal protective sheaths and appropriate rodent protection devices for aerially installed fiber-optic cables.

2. MULTI-MODE FIBER-OPTIC CABLE

a. Provide a Multi-Mode, Fiber-Optic Cable between the Main Equipment Room and each associated Telecommunications Room (TR).

b. The Multi-Mode, Fiber-Optic cable shall be 50/125, OM4 micron laser optimized fiber.

c. The Multi-Mode, Fiber Optic cable shall be OFNP rated, tight-buffered and installed in plenum rated inner-duct.

d. The Multi-Mode, Fiber-Optic cable shall be sized per the following formula; # strands: 6 strands per 48 ports. TR serving less than 96 users shall be minimum 12 strands.

e. Provide spare fibers after initial Network Configuration Design.

f. The Multi-Mode fibers shall be terminated with fusion-spliced, factory-polished, SC or LC Pigtails or pre-terminated backbone fiber with associated fiber cassettes.

g. Classroom fibers are not supplied for new construction; however, for existing construction (renovations), the fibers may be terminated with epoxy cured, field-terminated, SC or LC Connectors.

3. SINGLE-MODE FIBER-OPTIC CABLE
   a. Provide a Single-Mode, Fiber-optic Cable between the Main Equipment Room (ER) and each associated Telecommunications Room (TR).
   b. The Single-Mode, Fiber Optic cable shall be ***OS2*** 8.7/125 micron fiber.
   c. The Single-Mode, Fiber Optic cable shall be OFNP rated, tight-buffered and installed in plenum rated inner-duct.
   d. The Single-Mode, Fiber Optic cable shall be a minimum ***12 strands*** per TR to ER.
   e. The Single-mode fibers shall be terminated with fusion-spliced, factory-polished, SC or LC Pigtails or pre-terminated backbone fiber with associated fiber cassettes capable of 10 Gbps operation.
   f. Angle-Polished Connectors (APC) shall be utilized on all Single-mode fibers used to support AM Video (CATV, etc.) applications.

1.6 INTER-BUILDING OPTICAL FIBER BACKBONE CABLE SYSTEMS

A. MAIN EQUIPMENT ROOM (ER) TO MAIN EQUIPMENT ROOM (ER) INTER-BUILDING FIBER-OPTIC BACKBONE CABLE SYSTEM

1. GENERAL
   a. Provide a single-mode Optical Fiber Backbone System between all buildings on the same campus.
   b. Provide an optional, multi-mode Optical Fiber Backbone System between all buildings on the same campus that are less than 250 meters between building ERs.
   c. Upgrade existing Optical Fiber Backbone Systems to the following requirements.

2. MULTI-MODE FIBER-OPTIC CABLE - OPTIONAL
   a. Provide an optional Multi-Mode, Fiber-Optic Cable between the Main Equipment Room (ER) of the Network Center and each associated Building's Main Equipment Room (ER).
   b. The Multi-Mode, Fiber-Optic cable shall be 50/125, OM4 micron laser optimized fiber.
   c. The Multi-Mode, Fiber Optic cable shall be gel-filled or indoor/outdoor rated, tight-buffered cable installed in underground duct banks or aerially between buildings.
   d. If the fiber-optic cable shares the duct bank with other cables, install an inner-duct.
   e. The Multi-Mode, Fiber-Optic cable shall be a minimum 12 strands between buildings -- ER to ER.
   f. Provide a minimum of 25% spare fibers after initial Network Configuration Design.

g. The Multi-Mode fibers shall be terminated with fusion-spliced, factory-polished, SC or LC Pigtails or pre-terminated backbone fiber with associated fiber cassettes.

3. SINGLE-MODE FIBER-OPTIC CABLE
   a. Provide a Single-Mode, Fiber-optic Cable between the Main Equipment Room (ER) of the Network Center and each associated Building's Main Equipment Room (ER).
   b. The Single-Mode, Fiber Optic cable shall be an ***OS2*** 8.7/125 micron fiber.
   c. The Single-Mode, Fiber Optic cable shall be gel-filled or indoor/outdoor rated, tight-buffered cable installed in underground duct banks or aerially between buildings.
   d. If the fiber-optic cable shares the duct bank with other cables, install an inner-duct.
   e. The Single-Mode, Fiber-Optic cable shall be a minimum 12 strands between buildings -- ER to ER.
   f. The Single-mode fibers shall be terminated with fusion-spliced, factory-polished, SC or LC Pigtails or pre-terminated backbone fiber with associated fiber cassettes capable of 10 Gbps operation.
   g. Angle-Polished Connectors (APC) shall be utilized on all Single-mode fibers used to support AM Video (CATV, etc.) applications.

1.7 OPTICAL FIBER PATCH PANEL SYSTEMS

A. FIBER-OPTIC PATCH PANELS
   1. Fiber-Optic patch panels shall be mounted in equipment racks.
   2. Fiber-Optic patch panels shall be rack-mounted and shall be 24/48/72/144 port, or as required.
   3. Provide "Dual SC or LC" type couplers for multi-mode and single-mode cables.

B. FIBER-OPTIC CONNECTORS
   3. Terminate Multi-Mode fibers with factory-terminated SC or LC multi-mode pigtails. Match fiber cable type provided.
   4. Terminate Single-Mode fibers with factory-terminated SC or LC single-mode pigtails. Match fiber cable type provided.

C. FIBER-OPTIC SPLICE TRAYS (Fusion Splice Pigtails)
   3. Provide Fiber-Optic Fusion Splice Trays for connecting the factory-terminated, SC or LC pigtails to the associated Multi-Mode and Single-Mode fibers.

1.8 INSTALLATION

A. All cabling shall be installed according to ANSI/EIA/TIA specifications and BISCI standards.

B. All fiber-optic cabling shall be terminated on rack-mounted patch panels using fusion-spliced, pigtails, as noted above, or pre-terminated connector panel assembly.

See additional resources for updates

C. Provide space in rack (min 3 units) for possible District or DA-Site-provided, inter-building Fiber-Optic Cable Patch Panel.

1.9 LABELING

A. All racks, patch panels, cables, jacks, system components, etc. shall be labeled according to ANSI/EIA/TIA-606 specifications and in coordination with the District/architect.

B. All Fiber-Optic cables shall be equipped with a self-laminating, wrap-around, machine printed label at both ends of the cable.

C. All Fiber-Optic Patch Panels shall be equipped with pre-printed, cable identification designation strips installed behind clear plastic label holders on the front of the patch panel.

1.10 TESTING

A. All Cable test results shall be stored and presented to the Architect in both hard copy and electronic format for approval.

B. All Cable Tester, Record designations shall match the associated cable label, and associated patch panel label designation.

C. All Fiber-Optic Cables shall be tested with both a power meter and an OTDR.

END OF SECTION

SECTION 271513

COMMUNICATIONS COPPER HORIZONTAL CABLING

GENERAL GUIDELINES

1.1 GENERAL

A. This Section defines the general design requirements for a uniform Communications Copper Horizontal Cabling System Infrastructure that shall be followed for all OSFC Technology construction projects.
   1. Refer to Section 8500, Technology Systems, and Section 8600, Electrical Systems, for additional information.

1.2 SECTION INCLUDES

A. COMMUNICATIONS COPPER HORIZONTAL CABLING SYSTEM SYSTEMS
   1. Modular Jacks
   2. Modular Cover Plates
   3. Horizontal Cable
   4. Modular Patch Panels

1.3 QUALITY ASSURANCE

A. All equipment shall be UL listed.

B. All equipment and Installation Practices shall comply with the latest ANSI/NFPA-70 National Electric Code.

C. All equipment Installation Practices shall comply with the Local Electric Code.

D. All equipment shall comply with the latest ANSI-J-STD-607 Commercial Building Grounding (Earthing) and Bonding Requirements for Telecommunications Standard.

E. All equipment and Installation Practices shall comply with the latest BICSI® Telecommunications Distribution Methods Manual (TDMM).

F. All equipment shall comply with the latest ANSI TIA/EIA-568, 569, 606, 607, 862, standards.

G. All connecting equipment shall be from the same manufacturer.

1.4 SYSTEM WARRANTY

A. System shall carry an industry standard, performance based warranty, by the manufacturer and contractor, for a period of at least 20 years on the horizontal cabling; including patch panels, patch cables, terminations and labor. The remaining portions of the system shall be warranted for a period of ***three (3) years*** from date of substantial completion.

See additional resources for updates

1.5 MODULAR JACKS

A. Each 4-pair 100-ohm UTP data cable shall be terminated in an eight position, modular jack at the Work Area (WA).

B. The data cable shall be terminated directly to the modular jack with insulation displacement connectors.

C. The modular jack shall be a minimum of Category 6 compliant and 6a compliant for wireless solution.

D. The modular jack pair/pin assignments shall be T568B.

1.6 COVER PLATES

A. Plates shall be modular, front-loading and colored to match the video/data wall plates.

B. All plate colors shall be coordinated with the architect to match furnishings and fixtures.

C. Wall mounted phones shall utilize 630 style faceplates.

1.7 HORIZONTAL CABLE

A. In accordance with ANSI/EIA/TIA 568B.2 all horizontal data cable shall be:
   1. UL listed, 4-pair 100 ohm, UTP, Category 6 / ***shielded*** Category 6a (wireless) compliant
   2. Conductors shall be 24 AWG, solid bare annealed copper.
   3. Cable shall be insulated with FEP material.
   4. Cable shall be NEC CMP rated.

B. Cable shall be sequentially marked at 2-foot intervals.

C. Cable pairs shall be color coded:
   1. Pair 1- White/Blue and Blue.
   2. Pair 2- White/Orange and Orange
   3. Pair 3- White/Green and Green
   4. Pair 4- White/Brown and Brown

D. Provide horizontal voice / data cable drops for:
   1. Administrative Computers
   2. Bulletin Board System
   3. CCTV Cameras (as required)
   4. Classroom and Lab Computers
   5. Desk top phones
   6. Distance Learning Systems
   7. Door Phones (as required)
   8. Electrical Closets
   9. Elevator Phones
   10. Energy Management Systems (EMS)
   11. Fax Machines
   12. Fire Alarm Systems
   13. HVAC Equipment

14. LCD TVs
15. Master Clock System (as required)
16. Mechanical Closets
17. Miscellaneous Network Attached Devices
18. Pay Station Phones (as required)
19. Point of Sale Terminals (as required)
20. Printers
21. Projectors
22. Security and Access Control Systems
23. Set Top Boxes (as required)
24. Teacher Technology Centers
25. Video Conference Units
26. Wall mounted phones

E. Provide horizontal Category 6a cable drops for wireless access points***.***

F. Telecommunication outlet/connectors that serve an individual work area may be located in multiple faceplates.

1.8 MODULAR PATCH PANELS

A. All patch panels shall be in accordance with ANSI/EIA/TIA 568B.2 (or latest) and shall be equipped with eight position, modular jacks with insulation displacement connectors, rear cable-management bars/standoffs and front label designation strips.

B. Provide 24 or 48 port, Category 6 rated patch panels for termination of horizontal cabling. When the Equipment Room (ER) or Telecommunications Room (TR) serves more than one floor, sequentially group the cables by floor on separate patch panels.

C. Provide 24 or 48 port, Category 6a rated patch panels for termination of all wireless horizontal cabling. When the Equipment Room (ER) or Telecommunications Rooms (TR) serves more than one floor, sequentially group the cables by floor on separate patch panels.

D. Provide color-coded, Category 6 / ***shielded*** Category 6a (wireless) rated patch cords for all connections (plus 10% spare).

1.9 INSTALLATION

A. All cabling shall be installed according to ANSI/EIA/TIA specifications and BISCI standards.

B. All horizontal voice / data cabling shall be terminated on patch panels and jacks as noted above.

C. Consider providing cable slack at both ends of the horizontal cables to accommodate future cabling system changes.

See additional resources for updates

1.10 LABELING

A. All patch panels, cables, jacks, system components, etc. shall be labeled according to ANSI/EIA/TIA-606 specifications and in coordination with the owner/architect.

B. All horizontal cables shall be equipped with a self-laminating, wrap-around, machine printed label at both ends of the cable.

C. All Patch Panels shall be equipped with pre-printed, cable identification designation strips installed behind clear plastic label holders on the front of the patch panel.

D. All Modular Plates shall be equipped with a pre-printed, cable identification strip, installed behind a clear plastic label holder.

1.11 TESTING

A. All horizontal cabling shall be tested to Category 6 / ***shielded*** Category 6a (for wireless solution) performance levels in accordance with ANSI TIA/EIA-568-B.2 (or latest) specifications, using a Level III compliant tester.

B. All Cable test results shall be stored and presented to the Architect in both hard copy and electronic format for approval.

C. All Cable Tester Record designations shall match the associated cable label, patch panel label and faceplate label.

END OF SECTION

SECTION 271543

AUDIO-VIDEO COMMUNICATIONS HORIZONTAL TRANSPORT SYSTEM

GENERAL GUIDELINES

1.1 GENERAL

A. The baseline A/V system shall utilize digital sources and digital transport medium, to all display devices. The Technology Designer shall provide active electronics where required due to cable distance limitations. Coordinate infrastructure sizes and routing with the Electrical Designer.

B. The use of analog sources and transport medium shall be ***legacy only.***

C. ***All new work shall be digital systems.*** This Section defines the general design requirements for a uniform Audio-Video Horizontal Transport System Infrastructure that shall be followed for all OSFC Technology construction projects.

D. Refer to Section 8500, Technology Systems, and Section 8600, Electrical Systems, for additional information.

E. Refer to Figure 1 – Typical classroom audio-visual system components for general overview of equipment and interconnectivity

1.2 SECTION INCLUDES

A. AUDIO-VIDEO COMMUNICATIONS HORIZONTAL TRANSPORT SYSTEM
   1. ***Instructor AV interface outlet.***
   2. ***Guest AV Interface Outlet (optional)***
   3. ***Wardrobe AV equipment interface outlet***
   4. ***Instructor AV equipment interface outlet***
   5. ***Classroom Interactive Projector AV interface outlet***
   6. ***Public Monitor/TV AV Interface Outlet***

1.3 QUALITY ASSURANCE

A. All equipment shall be UL listed.

B. All equipment and Installation Practices shall comply with the latest ANSI/NFPA-70 National Electric Code.

C. All equipment Installation Practices shall comply with the Local Electric Code.

D. All equipment shall comply with the latest ANSI-J-STD-607 Commercial Building Grounding (Earthing) and Bonding Requirements for Telecommunications Standard.

E. All equipment and Installation Practices shall comply with the latest BICSI® Telecommunications Distribution Methods Manual (TDMM).

F. All equipment shall comply with the latest ANSI TIA/EIA-568, 569, 606, 607, 862, standards.

1.4 SYSTEM WARRANTY

A. System shall carry an industry standard, performance based warranty, by the contractor, for a period of at least 20 years on the cabling; including patch panels, patch cables, terminations and labor. The remaining portions of the system shall be warranted for a period of ***three (3)*** years from date of substantial completion.

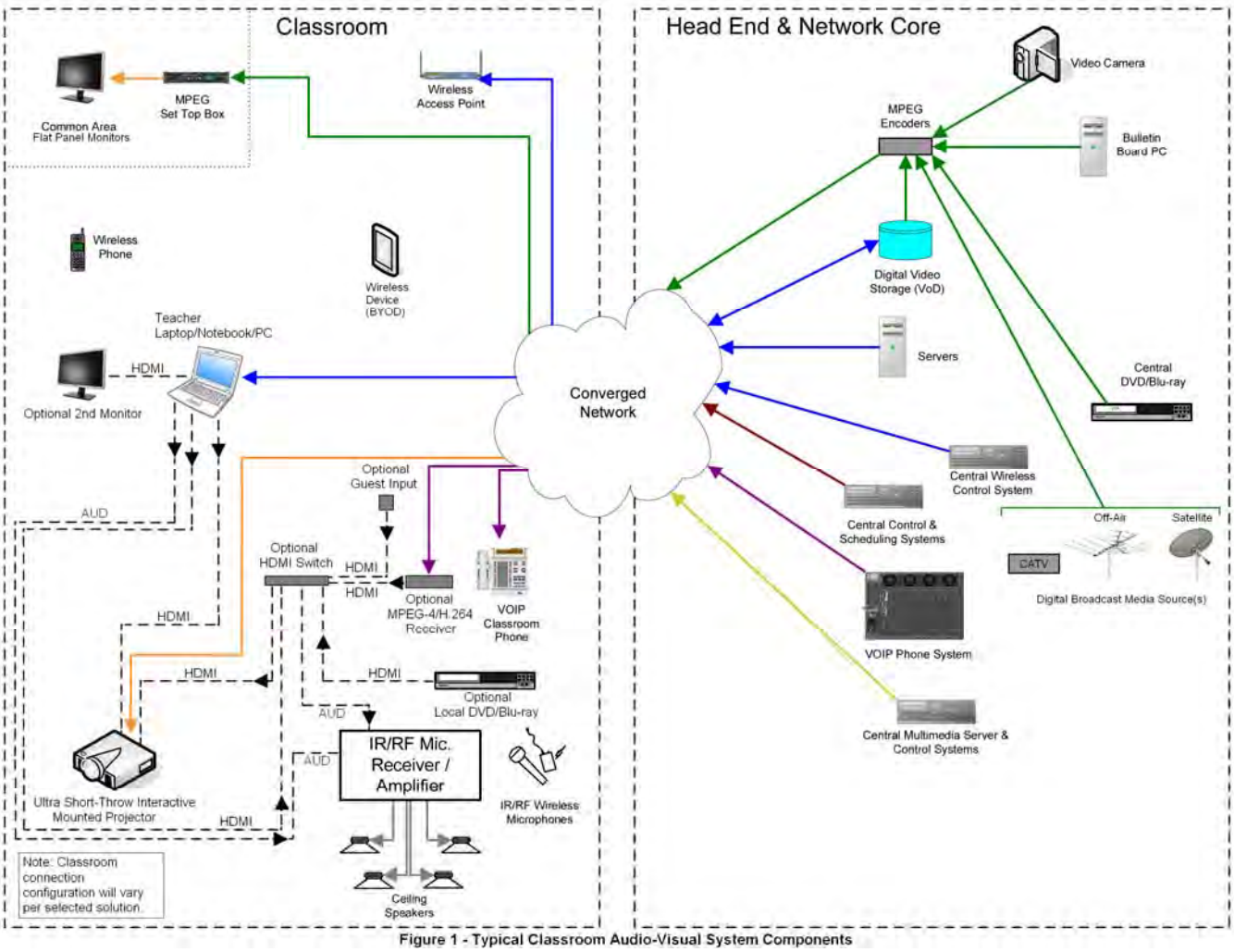

Figure 1 - Typical Classroom Audio-Visual System Components

1.5 AV INTERFACE OUTLETS

A. Each classroom/lab shall be provided with AV system interface outlets to transport digital media from and to the required AV equipment.

B. The video cabling shall utilize the appropriate media to transport digital signals including HDMI, DVI and USB. In addition, where required the cabling shall be provided to transport analog audio media, RS-232 controls and IR controls.

C. Instructor AV Interface Outlet

1. Provide Digital AV interface of HDMI or DVI for connection to the room projector or room HDMI/DVI switch. Utilize either HDMI/DVI cables, shared sheath cabling systems, or an active UTP based solution with appropriate transmitters/receivers based upon cabling distance limitations.

2. Where the room sound enhancement system is not co-located at the Instructor location, provide additional analog audio cabling to the sound enhancement system.

3. Provide interface for USB cabling to local interactive projector.

D. Guest AV Interface Outlet ***(Optional)***

1. Provide Digital AV interface of HDMI or DVI for connection to the room projector or room HDMI/DVI switch. Utilize either HDMI/DVI cables, shared sheath cabling systems, or an active UTP based solution with appropriate transmitters/receivers based upon cabling distance limitations.

E. Wardrobe AV Equipment Interface Outlet – Provide the following cables as required by room interconnectivity design

1. HDMI/DVI switch
   a. Provide Digital AV interface of HDMI or DVI for connection from the Instructor AV Interface, Guest AV Interface, local AV device (BluRay player, Set-top box) and the room projector. Utilize either HDMI/DVI cables, shared sheath cabling systems, or an active UTP based solution with appropriate transmitters/receivers based upon cabling distance limitations
2. Sound Enhancement System
   a. Provide speaker, line level audio (from Instructor AV Interface Outlet, HDMI/DVI switch) and IR sensor cabling.

3. Provide RS-232 cabling (optional) to projector for remote RS-232 to IP interface device.

F. Instructor AV Equipment Interface Outlet - Provide the following cables as required by room interconnectivity design.

1. Provide Digital AV interface of HDMI or DVI for connection from the Guest AV Interface, local AV device (BluRay player, Set-top box) and the room projector. Utilize either HDMI/DVI cables, shared sheath cabling systems, or an active UTP based solution with appropriate transmitters/receivers based upon cabling distance limitations.

2. Sound Enhancement System
   a. Provide speaker, line level audio (from Instructor AV Interface Outlet, HDMI/DVI switch) and IR sensor cabling.

3. Provide RS-232 cabling (optional) to projector for remote RS-232 to IP interface device.

G. Classroom Projector Display AV Interface Outlet

1. Provide Digital AV interface of HDMI or DVI for connection to the Instructor AV Interface Outlet, the Wardrobe AV Equipment Interface Outlet and/or the Instructor AV Equipment Interface Outlet. Utilize either HDMI/DVI cables, shared sheath cabling systems, or an active UTP based solution with appropriate transmitters/receivers based upon cabling distance limitations.

2. Provide interface for USB cabling to Instructor AV Interface Outlet

3. Provide RS-232 cabling (optional) to projector for remote RS-232 to IP interface device.

H. Public Monitor/TV AV Interface Outlet

1. Provide ***CAT 6*** network connectivity as a dual data drop.

2. Where required to have local input - Provide Digital AV interface of HDMI or DVI for connection to the Guest AV Interface Outlet, the Wardrobe AV Equipment Interface Outlet and/or the Instructor AV Equipment Interface Outlet. Utilize either HDMI/DVI cables, shared sheath cabling systems, or an active UTP based solution with appropriate transmitters/receivers based upon cabling distance limitations.

1.6 AV INTERFACE CABLES

A. Digital Video Cables

1. Provide listed cabling to support digital format such as DVI, HDMI, etc. Provide active electronics where required for selected cable distance limitations or for UTP based solutions.

2. The use of HDMI cables may present specific challenges due to the limited bending radius of the cables, the depth of the outlet boxes, and the conduit installation requirements to pull the pre-terminated cables through.

B. Line Level Audio Cable

1. Provide shielded twisted pair cable connected to Female RCA connectors (White/Red).

C. Projector Network Cable

1. Option 1 – Provide one (1) ***Category-6*** UTP cable connected to ***Category-6*** patch panel in associated Telecommunications room.

2. Option 2 – Provide one (1) RS-232 cable connected to RS-232 to IP Interface.

D. Set-Top-Box Network Cable

1. Provide one (1) ***Category-6*** UTP cable connected to ***Category-6*** patch panel in associated Telecommunications room.

E. Instructor Technology Center Network Cable

1. Provide two (2) ***Category-6*** UTP cables connected to the ***Category- 6*** patch panel in associated Telecommunications room.

F. USB Cable

1. Provide one (1) UTP to USB converter on each end with corresponding cabling to connect interactive projector and Teacher Workstation together through UTP based cabling.

1.7 VIDEO COVER PLATES

A. Plates shall be modular to fit all video jack components and shall match the associated voice/data plates.

1.8 INSTALLATION

A. Contractor shall provide and install AV Interface Wiring System.

B. Cables and associated connectors shall be terminated in accordance with industry standards.

C. Route the classroom Sound Reinforcement Amplifier IR sensor coax and associated speaker cables through faceplate to the Amplifier.

1.9 LABELING

A. Cables, jacks, system components, etc. shall be labeled according to ANSI/EIA/TIA-606 specifications and in coordination with the District/architect.

B. All Audio-Video Cables shall be equipped with a self-laminating, wrap-around, machine printed label at both ends of the cable.

See additional resources for updates

1.10 TESTING

A. ***Audio-v***ideo Wiring system and associated systems shall be tested end-to-end complete.

END OF SECTION

SECTION 272100

DATA COMMUNICATIONS NETWORK EQUIPMENT

GENERAL GUIDELINES

1.1 GENERAL

A. This Section defines the general design requirements for a uniform Data Communications Network Infrastructure that shall be followed for all OSFC Technology construction projects.
   1. Refer to Section 8500, Technology Systems, and Section 8600, Electrical Systems, for additional information.

1.2 SECTION INCLUDES

A. DATA COMMUNICATIONS NETWORK EQUIPMENT
   1. File/Building Server – optional.
   2. Network Switches.
   3. Network Core Switch.
   4. Network Security Equipment.
   5. Uninterruptible Power Supplies (UPSs).

1.3 QUALITY ASSURANCE

A. All equipment shall be UL listed.

B. All equipment and Installation Practices shall comply with the latest BICSI® Telecommunications Distribution Methods Manual (TDMM).

1.4 SYSTEM WARRANTY

A. ***The Local Area Network Electronics and software shall be fully warranted for three (3) years from date of substantial completion by the contractor and manufacturer. If any defects are found within this warranty period, the defective system component shall be replaced at no extra cost to the Owner for parts or labor. Provide a statement of this warranty with the O&M manuals and to the Director of IT. Make available a service contract offering continuing factory authorized service of this system after the initial warranty period.***

1.5 GENERAL

A. Each Building shall be provided with a Local Area Network (LAN) System.

B. Existing Facilities that are being remodeled shall be upgraded to the current requirements stated herein.

C. Single Building projects shall be compatible with the existing District Network infrastructure.

D. Wide Area Network (WAN) Interfaces shall be provided to interface the District's WAN provider. Coordinate WAN requirement with the District's fiber provider or DA-Site as applicable.

E. Buildings shall be designed as to minimize the quantity of Telecommunications Rooms and to centralize as much of the Data Network Equipment as possible.

F. Multiple buildings on the same campus should be designed to share common Data Network Electronics and equipment wherever possible.

G. Districts should design their Data Networks to take advantage of Centralization of Common Network Equipment at a Network Operations Center(s).

H. Items that should be centralized include:
1. File/Building Servers.
2. L-3 Routing Devices.
3. Network Management Equipment.
4. Security Devices, Radius Servers, etc.
5. WAN access equipment.
6. Wireless Management Equipment.

I. As a minimum, the Network may be used to support the following applications on a Local and Wide Area basis:
1. Automation Systems.
2. Clock Systems.
3. Control Systems.
4. Data Networking
5. Security Systems.
6. Video Conferencing.
7. Video Streaming/Media Retrieval.
8. VoIP Telecommunications.
9. Wireless Access Points.

1.6 FILE/BUILDING SERVER – Optional (Coordinate need with district)

A. Provide Network File/Building Server for the central administration and storage of computer files and information. The Networked Server shall be of a current design criteria, utilizing SAS 10k-15k rpm RAID level 5 hard drive storage (minimum 2TB)--Quad core processor. Coordinate OS with District. Min. 64-bit Windows Server 2008 if Windows based. Minimum 16 GB of RAM, 2 x 10Gig NIC. Attach to Core via 10 Gig DAC. 22" LED monitor, rack mounted.

B. Provide Operating System based on District requirements.

1.7 NETWORK SWITCHES

A. Provide 1000 Base T Layer 2 Manageable Ethernet Switches with ports in a quantity to support all initially planned devices, ***including wireless access points,*** with 15% spare.

B. Provide a configuration of switch ports utilizing either stackable edge switches or a modular chassis with single engine and dual PS.
1. Provide dual 10GB uplinks to each switch stack or modular chassis.

C. The 1000 switches shall be "non-blocking" and support a minimum forwarding bandwidth equal to the number of switch ports x 1 Gbps.

D. Utilize 10GB uplinks for all uplinks. Switches may be stacked, but provide each stack with a minimum of two uplinks for redundancy.

E. Chassis mounted units are acceptable for Edge Switches, provided that dual power supplies and equivalent uplink bandwidth is supplied.

F. The Network switches shall support advanced services such as:
1. IP Telephony.
2. Wireless Access Points.
3. Building Management Systems.
4. Video Streaming.
5. IP CCTV/Access Control

G. POE+ switches shall be rated to provide POE+ class 3 on all ports simultaneously. Standard 30 watts per port. ***Reference 802.3at standard.***

H. The 1000 switches shall support the following features and specifications:
1. 1000BASE-LX/LH.
2. 1000BASE-SX.
3. 1000BASE-X (SFP).
4. 1000BASE-ZX.
5. Access Control Lists (ACL).
6. Advanced QoS.
7. IEEE 802.1s.
8. IEEE 802.1D Spanning Tree Protocol.
9. IEEE 802.1p CoS Prioritization.
10. IEEE 802.1Q VLAN.
11. IEEE 802.1s.
12. IEEE 802.1w.
13. IEEE 802.1x.
14. IEEE 802.3 10BASE-T specification.
15. IEEE 802.3ab 1000BASE-T specification.
16. IEEE 802.3ad.
17. IEEE 802.3af and 802.11at POE.
18. IEEE 802.3u 100BASE-TX specification.
19. IEEE 802.3x full duplex on 10BASE-T, 100BASE-TX, and 1000BASE-T ports.
20. IEEE 802.3z 1000BASE-X specification.
21. IPv6.
22. Rapid Spanning Tree.
23. Rate Limiting.
24. RMON I and II standards.
25. SNMPv1, SNMPv2c, and SNMPv3.

I. Provide sufficient 1000 ports to accommodate, as a minimum, the following devices as required:
1. Access Control System.
2. Admin PCs.
3. Classroom PC Devices.

4. Clock Systems.
5. Distant Learning Systems.
6. Instructor PCs.
7. Monitor/TVs, as required.
8. MPEG Encoders.
9. PABX System.
10. Printers.
11. Projectors.
12. Set Top Boxes, as required.
13. UPS Units.

J. Provide ***all GB*** POE+ ports to accommodate, as a minimum, the following devices as required:
1. IP Phones
2. IP CCTV Cameras
3. WLAN access points.

1.8 NETWORK CORE SWITCH

A. Provide a modular chassis-based central Layer-3 ethernet routing switch with advanced QoS to serve the entire building or campus. The Core switch shall be provided with backplane capacity to provide full non-blocking support of all installed line cards plus 15% growth.

B. Equip the Central Layer-3 switch with a minimum of two (2) Power Supplies and two (2) Redundant Central Control/Supervisor Units.

C. All Core switch Blades must support full line speed and shall not be over-subscribed.

D. Provide sufficient Ports on the Layer-3 Core Switch, as a minimum, for the following devices:
1. Provide Network Switch uplink ports to support all edge switches plus 15% spare. The switch shall have at least one spare uplink card for redundancy.
2. Building Automation Systems, as required (typically TX).
3. CCTV DVR System (typically TX).
4. File Servers (typically TX, 10GB).
5. Firewall, as required (typically TX).
6. Media Distribution Servers & Controllers (typically TX).
7. Radius Authentication Server, as required, (typically TX).
8. WAN Connectivity (typically LX or CWDM).
9. Wireless Controllers (typically TX, 10GB).
10. Wireless Phone Controller (typically TX).
11. Wireless Control Console (typically TX).

E. In addition to the above listed features and specifications for the Network Switches, the Network Core Switch shall support the following Features and Specifications:
1. 10 Gbps Support capabilities.
2. BGP4 and Multicast Border Gateway Protocol (MBGP).
3. Full Internet Control Message Protocol (ICMP) support.
4. Hot Standby Router Protocol (HSRP).
5. ICMP Router Discovery Protocol.
6. IGMP filtering.

7. IGMP v1, v2, and v3.
8. IP Multicast routing protocols.
9. IP routing protocols: EIGRP, OSPF, Routing Information Protocol (RIP), and RIP2.
10. Non-Blocking GBE Ports.
11. NSF awareness.
12. Policy-based routing (PBR).
13. Virtual Router Redundancy Protocol (VRRP).

1.9 NETWORK SECURITY EQUIPMENT

A. RADIUS SERVER
1. If the District does not have a Central Radius Server, provide a Radius Server for Network Authentication, VLAN Assignment and Policy Assignment for IP Network Attached Devices.

B. FIRE WALL
1. If the District does not have a Central Firewall and Intrusion Detection Device for connection to the Wide Area Network and Internet, provide a Firewall and Intrusion Detection Device for Protection and Security. Establish all Internet Connections via a Firewall.
2. Size the Firewall based on planned Network throughput, available WAN bandwidth and attached IP Devices.
3. Provide VPN services in the Firewall for remote access and network maintenance services.
4. Coordinate requirements with District Technology Department.

1.10 UNINTERRUPTIBLE POWER SUPPLIES (UPSs)

A. Provide Dual Conversion UPS units for ER and TR Local area Network Electronics and File Server, providing sufficient protection from power anomalies.

B. Provide Power strips, connected to the UPS Unit via twist-lock plugs. Locate the power strips in the equipment racks and on the equipment backboards for powering all electronics systems in the ER and TRs.

C. Provide multiple UPS Units based on expected power load or a single large UPS Unit. Locate the multiple UPS units in the associated equipment racks or locate a larger central UPS unit in the Room.

D. Connect the UPS Units to Building Emergency Generator when available.

E. For buildings without a Generator, supply a two-hour (2) standby.

F. Provide shutdown connections from the UPS to servers for graceful power down in the event of a power failure.

G. Equip the UPS Units with a twist-Lock Power cable and SNMP Management Card.

H. Connect the UPS SNMP Management to the Management VLAN.

I. Coordinate UPS voltage, circuit size, and connection requirements with the Electrical Design Professional.

See additional resources for updates

1.11 INSTALLATION

A. Install File Server (optional) and setup basic user accounts and network configuration.

B. Install Data Network Ethernet Switches and validate connectivity throughout. Establish all VLANs, QoS, IP Routing and IP Subnets.

C. Consult with the District and consider providing the following VLANs as a minimum:
1. Administration.
2. HVAC.
3. Management.
4. Point of Sale.
5. Student.
6. Video.
7. Voice.
8. Wireless.
9. Security, CCTV

D. Coordinate network installation and integration with other systems connected to the network with District's and applicable DA-Site's technical and operational requirements.

E. Install and setup UPS units and establish power down procedures.

F. Connect System to DA-Site WAN Links and configure as per DA-Site requirements, when applicable.

G. Program and configure any State of Ohio Educational Network ATM switches required to access the DA-Site or the State of Ohio IVDL Network.

1.12 LABELING AND MARKING

A. Provide a typed schedule of all data ports according to each related room jack designation for all TRs, and ER, in accordance with District's requirements.

1.13 TESTING

A. Test the system "end-to-end" (from TR to ER, and from TR to station jack) at the direction of the Design Professional and verify, in writing, that the data network system is in proper working condition.

B. Verify and demonstrate proper operation of all switches, Access Points, VLANs, Routing, WAN Connectivity and possible ATM Connectivity with District and DA-Site representative, if applicable.

1.14 TRAINING

A. Provide a minimum of forty (40) hours of training to the District's personnel. Plan for multiple training trips to the site. Training session(s) shall cover the following topics at a minimum:
1. System Equipment Connectivity

See additional resources for updates

2. Device Configurations
3. Operation, maintenance, and upgrade procedures.

B. Training to be arranged with District personnel. 40 hours should be spread out over the length of the warranty (Ex: 8 hours at project turnover/completion, 8 hours at 3 months, 8 hours at 6 months, 8 hours at 1 year, 4 hours at 2 years, 4 hours at 3 year).

C. Training to occur in maximum of 2 hour increments per personnel or groups of personnel.

D. Consider requiring Contractor to provide manufacturer training vouchers for a portion of the training, which are valid during the warranty period.

E. Training shall be by certified manufacturer instructor.

F. Training schedule shall be coordinated with District personnel and their needs.

G. Training plan, time line, and agenda shall be provided to District IT personnel and signed off by District and Contractor.

H. Warranty certificate and agreement shall be provided to District IT personnel at initial training session.

I. Provide a digital video copy of the training sessions.

END OF SECTION

See additional resources for updates

THIS PAGE HAS BEEN LEFT INTENTIONALLY BLANK.

SECTION 272133

DATA COMMUNICATIONS WIRELESS ACCESS POINTS

GENERAL GUIDELINES

1.1 GENERAL

A. This Section defines the general design requirements for a uniform Data Communications Wireless Network Infrastructure that shall be followed for all OSFC Technology construction projects.

B. Refer to Section 8500, Technology Systems, and Section 8600, Electrical Systems, for additional information.

1.2 SECTION INCLUDES

A. DATA COMMUNICATIONS WIRELESS ACCESS POINTS
1. Wireless Controllers
2. Wireless Software Management
3. Network Tracking
4. Wireless Access Points
5. Mobile Device Management
6. Application Management

1.3 QUALITY ASSURANCE

A. All equipment shall be UL listed.

B. All equipment and Installation Practices shall comply with the latest ANSI/NFPA-70 National Electric Code.

C. All equipment Installation Practices shall comply with the Local Electric Code.

D. All equipment shall comply with the latest ANSI-J-STD-607 Commercial Building Grounding (Earthing) and Bonding Requirements for Telecommunications Standard.

E. All equipment and Installation Practices shall comply with the latest BICSI® Telecommunications Distribution Methods Manual (TDMM).

F. All equipment shall comply with the latest ANSI TIA/EIA-568, 569, 606, 607, 862, standards.

G. All equipment shall provide protection and containment of unwanted wireless signals and prevent student access to unwanted networks and content, in accordance with CIPA requirements.

H. All equipment shall meet or exceed ***802.11ac*** requirements.

1.4 SYSTEM WARRANTY

A. The Wireless Network Electronics and software shall be fully warranted for three (3) years from date of substantial completion by the contractor and manufacturer. If any defects are found within this warranty period, the defective system component shall be replaced at no extra cost to the Owner for parts or labor. Provide a statement of this warranty with the O&M manuals and to the Director of IT. Make available a service contract offering continuing factory authorized service of this system after the initial warranty period.

1.5 WIRELESS NETWORKING

A. GENERAL

1. Design Wireless System for full building coverage and to assure coverage for ubiquitous high density coverage for an average of 15-20 users per AP in educational areas and standard high density coverage throughout the remainder of the building, as per parameters in this specification.
2. Design Wireless System with 30% growth factored.
3. Design shall allow for additional bandwidth growth and shall be capable of limiting the bandwidth used by each device
4. Design shall provide for multi-state radios that can be switched from 2.4GHz to 5GHz
5. System shall allow bandwidth limits and time of day restrictions to be placed on particular users or particular device types
6. System shall allow network administrators to set QoS parameters for different traffic types
7. Provide ***802.11ac*** Wireless Access Points, management software and associated Wireless Network Controller(s), to support wireless Network Devices and Phones throughout the building and the associated campus.
8. Provide a ***shielded*** CAT 6A horizontal data cable drop for each AP. Terminate the AP Cable drop on a Patch Panel at the associated Telecommunication Room (TR).
9. Connect the AP to the IP Network via an IEEE ***802.3at*** Power Over Ethernet ***(POE+)*** 1 Gbps Switch Port.
10. Coordinate 802.31x, VLAN and Security Settings/Requirements with the District.
11. Shall provide proper network authentication and authorization
12. Security shall have the ability to check antivirus software
13. Wireless network management shall utilize the same firewall, NAC, and RADIUS as the LAN
14. System shall allow different user groups to be created with each group mapped to specific VLANS, access control list, and QoS parameters
15. System shall provide device fingerprinting identifying devices operating systems such as iOS, Microsoft Windows, Blackberry, or Android and shall classify the device type such as tablet, laptop, or smartphone.
16. Once the system has identified the device, a policy can be applied to control a device's reach and behavior
17. The device ID along with the user ID shall be used together to map that instance to a specific user group
18. Provide Wireless coverage for the entire building and associated perimeter area.
19. Provide minimum of -65 dB signal level ***and minimum 36dB SNR*** at all locations in building for ***802.11ac*** coverage.
20. Provide a minimum of 7 Mbps throughput per user.
21. Technology Designer shall verify quantity of users with the District.

22. Supply sufficient Access Points to provide for expected throughput and load sharing.
23. Users can "see" at least 3 Access points to provide for load sharing and balancing.
24. Wireless system shall have full multi-media capabilities by integrating:
    a. 802.11e
    b. WMM
    c. QoS
    d. Stateful Firewall
    e. Wired to wireless mapping and traffic management services based on device, user and/or traffic types. This includes priority queuing for multiple traffic types as well as multicast snooping and pruning.
    f. All APS/Arrays shall provide the ability to optimize multicast traffic by converting to unicast and/or optimize multicast traffic transmit rates to better match speeds of connected users.
25. Wireless system shall provide the following security functions:
    a. Dedicated 24/7 threat sensor radio
    b. Stateful firewall
    c. Integrated RADIUS
    d. Integrated ACLs, 802.11i, 802.1
    e. Line rate encryption, no matter the traffic volume of encryption protocol in use.
26. Wireless Design Validation
    a. During Design Phase, the Technology Designer shall utilize WLAN modeling software to plan the wireless access point deployment in a building and/or campus.
    b. The Technology Designer shall submit a predictive analysis survey via use of WLAN modeling software, along with the OSFC DD and CD technology phase submissions for review.
    c. As a minimum, this analysis shall indicate protocol, through-put and client density.
    d. The WAP quantity and layout shall be based on this modeling.
    e. ***Predictive analysis survey modeling shall be performed for 2.4 Ghz and 5 Ghz. Include both results in the submittal.***
27. Wireless Installation Validation
    a. Prior to installation of cabling for Access Points, the contractor shall perform an on-site Validation Survey. This survey shall be utilized to obtain actual site conditions including RF environment and RF properties of the construction. Prepare an AP placement plan utilizing the Validation Survey information and using the AP controllers "planning" tools. Provide a report to the Owner and Technology Designer for review and approval.
    b. After complete install of all AP's, perform a final survey and tune/optimize the system, ***while the building is occupied,*** to verify coverage. Move any AP's required to guarantee that coverage and performance requirements are met. Provide final report to the Owner and Technology Designer for review and approval.
28. Coordinate with local Law Enforcement and Safety Forces regarding their requirements for remote and wireless access into building Security and Energy Management Systems.
29. Law Enforcement and Safety Forces shall be responsible for providing their own remote access equipment.

See additional resources for updates

B. CABLING INFRASTRUCTURE FOR WIRELESS LOCAL AREA NETWORK
1. Shall consist of single mode fiber for the backbone to enable 10Gig backbone and provide upgradability for future.
2. Shall utilize ***shielded*** CAT 6A horizontal cable solution.
3. Baseline includes ***shielded*** CAT6A cable to each classroom. Wireless design will determine quantity and placement of WAP's.
4. Shall utilize 1 Gig uplink to the switch and a 10 Gig uplink to the headend equipment.

C. WIRELESS SYSTEM SPECIFICATIONS
1. RF Management
2. In-band per IAP Spectrum Analysis
3. Dynamic Channel Configuration
4. Dynamic Cell Size Configuration
5. Monitor radio for threat assessment and mitigation
6. Wired and Wireless Packet Captures (including all 802.11 headers)
7. Radio Assurance for radio self test and healing
8. RF Monitor
9. High Availability Supports Hot Stand-By for mission critical areas
10. Supports ability to turn off radios based on schedule configuration

D. WIRELESS PROTOCOLS
1. IEEE 802.11
2. IEEE 802.11 a
3. IEEE 802.11 b
4. IEEE 802.11 d
5. IEEE 802.11 e
6. IEEE 802.11 g
7. IEEE 802.11 h
8. IEEE 802.11 i
9. IEEE 802.11 j
10. IEEE 802.11 n
11. ***IEEE 802.11ac***

E. WIRED PROTOCOLS
1. IEEE 802.1p – Layer 2 Traffic Prioritization
2. IEEE 802.1q – VLAN Tagging
3. RFC Support
4. RFC 768 UDP
5. RFC 791 IP
6. RFC 2460 IPV6 (Bridging only)
7. RFC 792 ICMP
8. RFC 793 TCP
9. RFC 1122 Requirements for Internet Hosts – Communication Layers
10. RFC 1542 BOOTP
11. RFC 2131 DHCP

F. SECURITY
1. IEEE 802.11iWPA2, RSN
2. RFC 1321 MD5 Message-Digest Algorithm
3. RFC 2246 TLS Protocol Version 1.0
4. RFC 3280 Internet X.509 PKI Certificate and CRL Profile
5. RFC 4347 Datagram Transport Layer Security

6. ***RFC 4346 TLS Protocol Version 1.1***
7. ***WEP***
8. ***WPA™ – Personal***
9. ***WPA™ – Enterprise***
10. ***WPA2™ – Personal***
11. ***WPA2™ – Enterprise***
12. ***EAP Type(s)***
13. ***EAP-TLS***
14. ***EAP-TTLS/MSCHAPv2***
15. ***PEAPv0/EAP-MSCHAPv2***
16. ***PEAPv1/EAP-GTC***
17. ***Encryption Type***
18. ***Open***
19. ***WEP***
20. ***TKIP-MIC: RC4 40, 104 and 128 bits***
21. ***SSL and TLS: RC4 128-bit and RDA 1024 and 2048 bit***

G. ***AUTHENTICATION***

1. ***IEEE 802.1x***
2. ***RFC 2548 Microsoft Vendor-Specific RADIUS Attributes***
3. ***RFC 2716 PPP EAP-TLS***
4. ***RFC 2865 RADIUS Authentication***
5. ***RFC 2866 RADIUS Accounting***
6. ***RFC 2867 Tunnel Accounting***
7. ***RFC 2869 RADIUS Extensions***
8. ***RFC 3576 Dynamic Authorizations Extensions to RADIUS RFC 3579*** **RADIUS Support for EAP**
9. ***RFC 3748 Extensible Authentication Protocol***
10. ***Web Page Authentication***
11. ***WPR, Landing Page, Redirect***
12. ***Support for Internal WPR Landing Page and Authentication***
13. ***Support for External WPR, Landing Page, and Authentication***

H. ***CHANNEL SUPPORT 2.4GHz***

1. ***1 2 3 4 5 6 7 8 9 10 11 12 13 14***

I. ***CHANNEL SUPPORT 5GHz***

1. ***Uni 1 – Non-DFS Channels***
2. ***36 40 44 48***
3. ***UNI I DFS Channels***
4. ***52 56 60 64***
5. ***UNI II DFS Channels***
6. ***100 104 108 112 116 120 124 128 132 136 140***
7. ***UNI III Non-DFS Channels***
8. ***149 153 157 161 165***

J. ***MANAGEMENT INTERFACES***

1. ***Command Line Interface via serial console, SSHv2, Telnet***
2. ***Web interface (http / https)***

K. ***MANAGEMENT***

1. ***SNMP v1, v2c, v3***

2. ***RFC 854 Telnet***
3. ***RFC 1155 Management Information for TCP/IP Based Internets***
4. ***RFC 1156 MIB***
5. ***RFC 1157 SNMP***
6. ***RFC 1213 SNMP MIB II***
7. ***RFC 1350 TFTP***
8. ***RFC 1643 Ethernet MIB***
9. ***RFC 2030 Simple Network Time Protocol SNTP***
10. ***RFC 2616 HTTP 1.1***
11. ***RFC 3636 Definitions of Managed Objects for IEEE***
12. ***RFC 2674 Definitions of Managed Objects for Bridges with Traffic Classes, Multicast Filtering, and Virtual LAN Extensions***
13. ***RFC 2819 Remote Network Monitoring Management Information Base***
14. ***RFC 2863 The Interface Group MIB***
15. ***RFC 3164 BSD Syslog Protocol***
16. ***RFC 3414 User-based Security Model (USM) for version 3 of the Simple Network Management Protocol (SNMPv3)***
17. ***RFC 3418 Management Information Base (MIB) for the Simple Network Management protocol (SNMP)***

L. ***RADIO OPTIMIZATION MANAGEMENT***

1. ***Shall individually control band selection (2.4GHz or 5GHz), transmit power, and channel allocation.***
2. ***Shall have option of controlling band selection either automatically or manually.***
3. ***Shall support Auto Channel which provides an automatic means of allocating Wi-Fi channels between radios in a deployment.***
4. ***Shall provide Auto Channel. System scans the RF environment on a radio-by-radio basis, coordinated among all AP's/Arrays in the network, to determine the best channel of operation per radio.***
5. ***Auto Channel function shall be scheduled periodically to tune the design in response to potential environmental changes.***
6. ***Shall support Auto Cell – an automatic, self-tuning mechanism that balances cell size between AP's/Arrays. Shall ensure sufficient coverage while limiting the RF energy that would extend beyond the organizational boundary between AP's/Arrays.***

M. ***RESOURCE ASSURANCE MANAGEMENT***

1. ***Shall continuously monitor wireless client behavior for potential issues.***
2. ***If a client is detected encountering connectivity or performance issues, a notification is logged.***
3. ***Elements to be monitored:***
   - ***a. Authentication failures***
   - ***b. Packet error rates***
   - ***c. Packet retry rates***
   - ***d. Data rates***
   - ***e. Signal strength***
   - ***f. Signal-to-noise ratio***

4. ***Shall execute local testing of radio resources and self-healing to ensure wireless service availability.***

5. ***The monitor radio shall periodically function as a wireless client and connect to each of the user servicing radios. If a problem is detected, multiple options for action may be taken, including logging a notification or resetting the radio itself.***
6. ***Network Assurance shall actively monitor the status of key network elements, including the Gateway, RADIUS servers, NTP servers, SNMP trap hosts, and DNS servers. If any of these are unreachable, a notification is logged.***
7. ***The System shall be optionally configured to disassociate users proactively if network resources are not available so that clients do not remain connected wirelessly with no network service.***

N. ***DEVICE OPTIMIZATION MANAGEMENT***

1. ***Wi-Fi devices shall be identified by type upon connecting to the network, e.g. laptop, tablet, smartphone, gaming device, etc.***
2. ***This information is then used to map the device to specific resources as desired. Dedicated radios and wireless networks (SSIDs) can be assigned to devices that need high bandwidth or are operating in a specific mode.***
3. ***Shall provide Station Load Balancing.***

O. ***SECURE WIRELESS NETWORK***

1. ***Shall perform packet encryption and decryption. All encryption processes are performed at line-rate in hardware.***
2. ***Wireless encryption supported shall include the standard three encryption options:***
   - ***a. Wi-Fi Protected Access with AES***
   - ***b. Wi-Fi Protected Access (WPA & WPA2)***
   - ***c. WEP-40 bit or WEP-128bit – only use this for legacy devices that cannot support a stronger encryption type***
3. ***Should also support TKIP and AES protocols simultaneously on the same SSID to support mixed and dynamic client environments.***
4. ***Shall include PCI and FIPS140-2 audit modes of operation to monitor for compliance.***
5. ***Shall monitor, detect, mitigate and report on active or potential wireless threats to your network. These include:***
   - ***a. Dedicated threat sensor radio, depending on network design, for complete 24x7 IDS/IPS coverage of the RF environment.***
   - ***b. Continuous 24x7 monitoring of the wireless RF environment.***
   - ***c. Detection of potential rogue or malicious APs, ad hoc, and stations.***
   - ***d. Rogue device classification***
   - ***e. Automatic alerts, alarms, and logging of rogue devices.***
   - ***f. Key rogue device information such as first seen, last seen, manufacturer, SSID, and channel.***
   - ***g. Automatic shielding of rogue devices by Array radios to contain threatening devices when detected, while still scanning for new threats.***
6. ***Ensures compliance with wireless security policies and regulations through automated reporting.***
7. ***Continuously monitor all 802.11 channels for throughput, signal, noise, errors, and interference levels continually per channel.***

See additional resources for updates

8. ***Administrators centrally collect data from their desk and monitor the entire network at one time.***
9. ***Monitor all 802.11 channels, not just the ones that are currently being used for data traffic.***
10. ***Provides device locating via analysis of Received Signal Strength Indication (RSSI) data collected by radios. This capability is available via the CLI, WMI, and XMS interfaces/applications at different levels of functionality.***
11. ***Use integrated directional antennas on each radio, providing angle of orientation information about device location in addition to estimated distance based on RSSI level.***
12. ***Both associated and unassociated stations can be located in this fashion.***
13. ***Aggregate data from multiple AP's/Arrays to determine device positioning. Multi-AP/Array design provides for even greater accuracy than single AP/Array methods.***
14. ***Locating in normal conditions shall provide accuracy within a 5-meter radius or better.***
15. ***User access control protocols and features designed to classify, assign, and monitor associated and unassociated clients. These include:***
    - ***a. RADIUS 802.1x***
    - ***b. Fully support 802.1x authentication servers***
    - ***c. MAC Access Control Lists (ACLs) supports 512 ACL entries***
    - ***d. Web Page Redirect (Captive Portal) capabilities***
    - ***e. Web-based authentication against internal or external RADIUS server***
    - ***f. Local host or remotely hosted web page redirect (log-in/splash screen)***
    - ***g. Configure splash screen time-out***
16. ***Failover capability by allowing the specification of primary and secondary RADIUS servers and timeout values.***
17. ***Each SSID can specify a unique RADIUS server set enabling each SSID independent authentication control.***
18. ***Each SSID can define limits for users based on time of day, day of week, and traffic volume.***
19. ***Identify devices by operating systems, such as iOS®, Microsoft®, BlackBerry®, or Android™***
20. ***Identify devices by type, such as tablet, laptop or smartphone.***
21. ***The device ID, along with the user ID, can be used together to map the device to a policy to control a user's reach and behavior.***

P. ***LOCATION SERVICES***

1. ***Provide Wi-Fi client location services across the entire wireless network using a Management System. Each AP provides a signal reading for each client, and the direction of the antenna provides information about the direction of the client relative to the AP/Array.***
2. ***Mapping – Based on RF settings and properties of the environment, the management software shall generate heat maps showing RF coverage patterns across the environment.***

3. ***Asset Tracking – Can have the ability to track assets across a wide variety of devices and use cases. Devices can be tracked to within 3-5 feet accuracy.***

Q. ***GUEST SERVICES***

1. ***Web Page Redirect (WPR) allows a guest to be presented with a web browser welcome screen before gaining access to the wireless network.***
2. ***Directory Integration – Shall integrate with the same systems used for the wired network.***
3. ***Policy Management – Bandwidth limits can be configured to ensure guest users do not overrun educational staff and student traffic usage. Restrictions can be placed on time of day access and day of the week access. Policies can be set to enforce use policies for different device types. Policies can be set and enforced on a user, role, device, and time basis.***

R. ***VOICE AND MULTI-MEDIA SUPPORT (QoS)***

1. ***Optimize application support so all standard QoS (802.11e) and Wireless Multi-Media (WMM) features including multiple traffic queues (4) and packet level identification of voice traffic. Wired to wireless QoS mapping (802.11p/q) support. Separate protocol support for the leading providers of 802.11 handsets.***
2. ***Enable end-to-end QoS support and tag 802.1P packets.***
3. ***Shall have multicast-to-unicast conversion and IGMP snooping to optimize the performance of multicast in a Wi-Fi environment. IGMP (Internet Group Management Protocol) is used to establish and manage the membership of multicast groups. The following configuration options are available:***
   - ***a. Send multicasts unmodified***
   - ***b. Convert to unicast and send unicast packets to all stations***
   - ***c. Convert to unicast, snoop IGMP, and only send to stations subscribed (send as multicast if no subscription).***
   - ***d. Convert to unicast, snoop IGMP, and only send to stations subscribed (don't send packet if no subscription).***
4. ***Each SSID can define separate traffic controls based on business requirements, including QoS (VoIP) and QoS tags can also be updated based on policy rules via the integrated Stateful firewall.***

S. ***MOBILE DEVICE MANAGEMENT***

1. ***Provide a high level of flexibility in allocating Wi-Fi users and devices among system resources to optimize overall performance.***
2. ***Wi-Fi devices shall be identified by type upon connecting to the network (e.g. laptop, tablet, smartphone, gaming device).***
3. ***Dedicated radios and wireless networks (SSIDs) can be assigned to devices that need high bandwidth or are operating in a specific mode. Coordinate with Owner.***
4. ***Based on device type, specific policies can be applied such as bandwidth restrictions, application types, and time restrictions. Coordinate with Owner.***

5. Resources can also be allocated based on device performance ensuring the performance of faster device types (e.g. ***802.11ac***) are not negatively impacted by slower device types (e.g. 802.11b). Coordinate with Owner.
6. Users can be assigned to specific resources based on not just login information, but also client type and class. Identify the devices' operating systems such as iOS®, Microsoft® Windows®, BlackBerry®, or Android™ and can then classify the device type such as tablet, laptop, or smartphone. Once the device has been identified, a policy can then be applied to control a user's reach and behavior. The device ID, along with the user ID, can be used together to map that instance to a specific user group.
7. Allow different user groups to be created with each group being mapped to specific VLANs, access control list, and QoS parameters.

T. WIRELESS CONTROLLERS AND LOCATION TRACKING
1. Equip each building with a Wireless Controller(s). Provide Location Tracking as an option. This may be a separate appliance or software upgrade to wireless controller(s).
2. These devices shall be directly attached to the associated L-3 Network Core Switch via 10 Gigabit interfaces as required.
3. Shall adhere to all requirements in the aforementioned sections.
4. Hosted Control Systems can be utilized as long as all required features are provided as well as a minimum 5 years of licensing.

U. WIRELESS ACCESS POINTS
1. Provide centrally powered IEEE ***802.11ac*** Wireless Access Points (APs) for each new and remodeled building.
2. Each Access Point shall support a minimum of 14 VoWLAN Phones and dynamically throttle back non-VoIP traffic.
3. Place and dimension the number of Access Points based on required throughput, load balancing and location tracking.
4. Shall adhere to all requirements in the aforementioned sections.

1.6 INSTALLATION

A. Contractor shall provide and install Wireless System and associated cabling, POE devices, Central Controllers and Console.

B. The Building Floor Plans and Site Plans shall be entered into the Central Wireless Control Console.

C. The Central Wireless Control Console floor and site plans shall be calibrated after the installation has been performed.

D. Access Point cables and associated connectors shall be terminated in accordance with industry standards.

E. Balance Wireless Access Points to insure complete coverage with minimal service degradation.

F. Setup Wireless Access Security and provide for CIPA Compliance.

G. Determine the optimum location of all devices in the wireless LAN coverage areas and consider the access point density and location.

H. Locate all internal Access Points above the ceiling tile grid wherever possible.

I. Provide Antennas mounted external to the building for coverage of areas surrounding the building such as: playgrounds, parking lots, athletic fields, etc.

J. Connect the external antennas to APs mounted inside of the building.

1.7 LABELING

A. Cables, jacks, system components, etc. shall be labeled according to ANSI/EIA/TIA-606 specifications and in coordination with the District requirements.

B. All AP Cables shall be equipped with a self-laminating, wrap-around, machine printed label at both ends of the cable.

1.8 TESTING

A. Perform complete site survey after system placement and verify coverage and throughput to comply with the specifications and to optimize the system.

1.9 TRAINING

A. Provide a minimum of ***forty (40)*** hours of training to the District's personnel and/or designated representative. Plan for multiple training trips to the site. Training session(s) shall cover the following topics at a minimum:

1. System Equipment Connectivity
2. Device Configurations
3. Operation, maintenance, and upgrade procedures.

B. Training to be arranged with District personnel. 40 hours should be spread out over the length of the warranty (Ex: 8 hours at project turnover/completion, 8 hours at 3 months, 8 hours at 6 months, 8 hours at 1 year, 4 hours at 2 years, 4 hours at 3 year).

C. Training to occur in maximum of 2 hour increments per personnel or groups of personnel.

D. Consider requiring Contractor to provide manufacturer training vouchers for a portion of the training, which are valid during the warranty period.

E. Training shall be by certified manufacturer instructor.

F. Training schedule shall be coordinated with District personnel and their needs.

G. Training plan, time line, and agenda shall be provided to District IT personnel and signed off by District and Contractor.

H. Warranty certificate and agreement shall be provided to District IT personnel at initial training session.

I. ***Provide a digital video copy of the training session.***

END OF SECTION

SECTION 273113

IP-ENABLED PABX SYSTEM

GENERAL GUIDELINES

1.1 GENERAL

A. This Section defines the general design requirements for a uniform IP-Enabled PABX System that shall be followed for all OSFC Technology construction projects.
B. Refer to Section 8500, Technology Systems for additional information.
C. An IP-Enabled PBX shall only be specified for projects that are expanding or extending existing systems.

1.2 SECTION INCLUDES

A. Central IP-Enabled PABX.
B. Attendant Console Terminal.
C. Executive Display Digital Voice Terminal.
D. Standard Display Digital Voice Terminal.
E. Single Line Voice Terminal.
F. Voice Mail with Automated Attendant.
G. E-911 Console.
H. Uninterruptible Power Supply (UPS)

1.3 QUALITY ASSURANCE

A. All equipment shall be UL listed.
B. Compliance with the National Electric Code.
C. Compliance with FCC rules.
D. Comply with latest NENA E-911 requirements.

1.4 SYSTEM WARRANTY

A. ***The IP Enabled PABX System and software shall be fully warranted for three (3) years from date of substantial completion by the contractor and manufacturer. If any defects are found within this warranty period, the defective system component shall be replaced at no extra cost to the Owner for parts or labor. Provide a statement of this warranty with the O&M manuals and to the Director of IT. Make available a service contract offering continuing factory authorized service of this system after the initial warranty period.***

1.5 GENERAL REQUIREMENTS

A. Each Building's telephone system must provide the following minimum requirements:
   1) Support for E-911.
      a. ***Allow the caller to be located down to the specific office/room on a particular floor of a building.***
   2) Support for the following carrier and Inter-switch interfaces:
      a. Digital (T-1, PRI).
      b. Session Initiation Protocol (SIP).
      c. Analog (POTS) lines.

d. Provide carrier circuit interfaces adequate to handle ALL incoming and outgoing calls.

3) Support for Direct inward Dialing (DID).

4) Support for the following endpoints (phones/devices):

a) Digital (TDM)

b) IP (must support non proprietary H.323 and SIP compliant devices).

c) Analog (phones/faxes etc.)

d) Endpoints that provide "full duplex speakerphone" capability must be provided in specific rooms.

e) Provide system with capacity for all endpoints required plus 10% spare.

5) Provide support for a minimum of two (2) fax stations per building.

6) Provide UPS.

B. System to have maintenance and administration terminal and remote access capabilities.

C. A common Telephone Switching Platform shall be used across the District to insure inter-operability. In the event that the District already has an established Telephone System that meets OSFC requirements, additional buildings may be added to the District, specifying existing Vendor's system.

D. In the event that no standard system exists for the District, then the OSFC PA shall decide if the first systems bid establish a critical mass and if the multiple vendor requirement can be waived.

1.6 WORK BY LOCAL UTILITIES

A. Coordinate all work with the local and long-distance Service Providers (SPs).

1.7 IP-ENABLED PABX

A. The Central Switching Exchange shall be a fully-digital, IP-Enabled (minimum) PBX Telephone Switch. Key Systems and hybrid intercom/telephone systems will NOT be acceptable.

B. The IP-ENABLED PABX must be modular in design.

C. The IP-ENABLED PABX shall be sized according to student population and traffic requirements and shall be equipped with carrier circuit interfaces for incoming/outgoing call lines. The minimum circuits shall be as follows:

1. One PRI or equivalent SIP trunk for up to 100 stations.

2. Two PRIs or equivalent SIP trunks for greater than 100 stations.

3. Additional PRIs or equivalent SIP trunks based on traffic requirements.

4. The use of analog central office (CO) line interface is acceptable if system is supporting existing analog phone service and as long as adequate line capacity is provided to support call traffic. System must still include digital carrier interface for future growth.

D. The IP-ENABLED PABX shall be equipped with full Name and Number Caller ID functions for incoming and outgoing calls.

E. The IP-ENABLED PABX must be equipped with a minimum of three (3) analog lines to the local Service Provider for E-911 services and PRI backup.

1. ***Allow the caller to be located down to the specific office/room on a particular floor of a building.***

F. Connect the Analog Lines to a Power Failure Transfer (PFT) Unit and supply a minimum of three (3) analog phones, located in the Central Office Area for emergency operation.

See additional resources for updates

G. The telephone system must have the following minimum features:
1) Access Codes.
2) Attendant's Console.
3) Automatic Location Identifier (ALI).
4) Automatic Number Identification Support (ANI).
5) Call Accounting Software and Hardware.
6) Call Conferencing.
7) Call Forwarding on Busy.
8) Call Forwarding External Calls
9) Call Forwarding Internal Calls.
10) Call Hold.
11) Call Pickup.
12) Call Screening.
13) Dialed Number Identification Service (DNIS).
14) Direct Inward Dialing (DID).
15) Distinctive ring tones.
16) Do Not Disturb
17) E-911 and latest NENA support.
18) E-911 Call Recording and Bridging to E-911 Central Console.
19) FCC Registration.
20) Full Caller ID – Incoming/Outgoing.
21) Full duplex, Digital Display, Speaker Phones.
22) Hands Free Intercom – Phone-to-Phone.
23) IEEE 802.3af compliant VoIP Power
24) Least Cost Routing.
25) Maintenance and Administration Terminal.
26) Malicious Call Trace/Hold.
27) Message Waiting Lamp.
28) Paging Interface (minimum 6 zones).
29) Minimum of eight (8) Pre-program buttons.
30) PRI/T-1 Trunking.
31) Remote diagnostics.
32) SIP Signaling Protocol
33) Standards Based, VoIP Phone Support.
34) Support wireless 802.11 VoWLAN phones
35) System Speed Dial.
36) Unified Messaging.
37) VoIP Trunking – H.323 and SIP.

H. Inter-Building Trunks (Links) between Systems shall be designed using T-1 Lines, PRI Lines or VoIP Trunking. A minimum capacity of 23 inter-building links shall be provided. Dimension all Trunks based on a minimum of P=0.01 Grade of Service.

I. When a high-speed WAN connection exists, use a VoIP connection between buildings.

J. Design the District-Wide system to provide for Least-Cost Routing and Toll-Bypass when applicable. Supply additional PRI circuits as required.

K. Provide IEEE 802.3af compliant Power Injectors/switches for all VoIP Phone instruments.

L. Each District Building's IP-ENABLED PABX shall be capable of complete stand-alone operation (with the exception of centralized voicemail) in the event that the Inter-Building Trunks (Links) are not operational.

M. District-Wide Systems shall function as a single system with Common Features, Centralized Voice Mail, and Centralized Call Detail Recording with a single record per call and the ability for Centralized Attendant Service for the entire District.

N. When more than one building per District is involved, all incoming and outgoing calls may be routed over carrier circuits connected to a Central IP-Enabled PABX. The Central IP-ENABLED PABX capacity shall be dimensioned to handle all current and planned District buildings.

O. IP-ENABLED PABX units shall employ a hardened Operating System that is not susceptible to Internet Computer Viruses.

P. IP-ENABLED PABX units shall be provided with a minimum of 10% spare line/station capacity at initial installation.

Q. The PABX shall be an IP-Enabled PABX or an IP Based PABX. The all IP Based system shall maintain the same high level of functionality, redundancy and programmable features as originally specified. Any all-IP system shall employ standards based signaling, instrument powering and redundant call servers in each District Building served by the system. See Section 273123 for additional details.

R. Provide centralized PABX and phone instrument power with a minimum of two (2) Busy-Hour standby capabilities for all PABX equipment. IP Based systems shall also be provided with two (2) Busy-Hour standby capabilities for all powered Switches or Patch Panels located in each Telecommunications Room (TR). Connect the Central Power Supplies to Building Emergency Power when available.

S. All IP Instruments and power sources shall be IEEE 802.3af compliant.

T. All PABX systems shall support IP Inter-building trunking (H.323 or SIP) and the attachment of IP Instruments such as IP Phones, PDAs, Soft Phones and 802.11 Phones.

U. As a minimum, the Call Accounting shall include date, time, duration of call, extension number, account code (if applicable) and number dialed along with software export features to standard spread sheets.

See additional resources for updates

1.8 ATTENDANT CONSOLE TERMINAL

A. Minimum of 32 Character LCD Display.

B. Display day, date and time.

C. Display call durations.

D. Display caller name and extension/telephone number and incoming caller-ID information.

E. Hands free, Full-Duplex, Speakerphone.

F. Shall have a system display panel capable of showing all system extension numbers and their status and capable of extending calls via single touch operation.

G. Provide a minimum of two (2) consoles per building for load sharing and redundancy.

1.9 ADMINISTRATIVE DISPLAY DIGITAL VOICE TERMINAL

A. Provide one administrative phone for all administrative areas, conference rooms, small group rooms, nurse/health office, and special needs rooms.

B. At least sixteen characters display window.

C. At least sixteen programmable keys.

D. Hands free, Full-Duplex Speakerphone.

E. Display caller name and extension/telephone number.

F. Message Waiting Lamp.

G. Pre-programmed E-911 button that automatically puts the phone into a hands-free mode, and initiates a 3-way conference call with the central console, as well as the local 911 center.

1.10 STANDARD DISPLAY DIGITAL VOICE TERMINAL

A. Provide one standard 8 button phone for all classrooms, labs, general offices, and other areas not covered above in section 1.9.

B. At least sixteen characters display window.

C. At least eight (8) programmable keys.

D. Hands free, Speakerphone. Full Duplex required if One Way Paging Variance is utilized.

E. Display caller name and extension/telephone number.

F. Message Waiting Lamp.

G. Pre-programmed E-911 button that automatically puts the phone into a hands-free mode, and initiates a 3-way conference call with the central console, as well as the local 911 center.

1.11 CONFERENCE PHONE

A. As a minimum, provide Multi-User, Full-Duplex conference Speakerphone for Conference Rooms and/or Principal's Office.

1.12 VoWLAN PHONES

A. Provide a minimum of two Wireless VoIP (VoWLAN) Phone instruments, with carrying case and charger units.

B. Provide integral VoWLAN 802.11e QoS capability or SVP server for VoWLAN QoS.

1.13 VOICE MAIL SYSTEM

A. System shall have the following number of voice ports:
   1) Minimum of 4 ports (450 students).
   2) Minimum of 8 ports (650 students).
   3) Minimum of 12 ports (850 students).

B. System shall have the following capacity:
   1) One voice mail box per station plus 20% minimum spares.

C. System shall have an automated attendant.

D. System shall be fully integrated with IP-Enabled PABX.

E. System shall activate telephone station "message waiting" light.

F. System shall have Integrated Messaging capability. Supply based on District's requirements. Verify E-Mail Server compatibility (Exchange, Notes, Groupwise, etc.)

1.14 E-911 CONSOLE

A. System shall support Call Bridging at Console for all E-911 calls.

B. System shall provide Call Recording for E-911 Calls.

C. System shall support full NENA Compliant ANI and ALI data transmission from local Data Base to PSAP.
   1) ***Allow the caller to be located down to the specific office/room on a particular floor of a building.***

1.15 UNINTERRUPTIBLE POWER SUPPLIES (UPS)

A. Provide Dual Conversion UPS units for Main Telephone Switch, providing sufficient protection from power anomalies for two (2) busy hours.

B. Provide multiple UPS Units based on expected power load or a single large UPS Unit. Locate the multiple UPS units in the associated equipment racks or locate a larger central UPS unit in the Room.
C. Connect the UPS Units to Building Emergency Generator.
D. For buildings without a Generator, supply a four-hour (4) standby.
E. Provide shutdown connections from the UPS for graceful power down in the event of a power failure.
F. Equip the UPS Units with a twist-Lock Power cable and SNMP Management Card.
G. Connect the UPS SNMP Management to the Management VLAN.
H. Coordinate UPS voltage, circuit size, and connection requirements with the Electrical Design Professional.

1.16 INSTALLATION

A. Coordinate complete system installation, and Technology Head End Integration with District and other Technology Trades.
B. Coordinate installation and interconnect with local and long-distance Service Provider (SP). Contractor shall be responsible for all final cross connects and system Data Base loading and verification.
C. Contractor shall connect to, and interface with the in-house paging system and provide paging from any telephone handset.
D. Connect system to IP Data Network and program required VLANs and 803.11e support.
E. Interconnect with existing systems via VoIP trunking.
F. Integrate system with District's Numbering Plan.

1.17 SYSTEM PROGRAMMING

A. Contractor shall provide the District/architect with a complete set of forms for the entire system and extension features for final programming.
B. Final programming of the system shall be co-developed between the District/architect and the contractor and must be approved prior to being implemented for system tart-up.
C. tractor shall supply the "latest" software updates as part of the system configuration or ***three (3)*** years after system acceptance.

1.18 TRAINING

A. Provide a minimum of forty (40) hours of training to the District's personnel. Plan for multiple training trops to the site. Training session(s0) shall cover the following topics at a minimum:

1. System Equipment Connectivity
2. Device Configurations
3. Operations, maintenance, and upgrade procedures.

B. Training to tbe arrange with District Perconnel. 40 hours should be pread out over the length fo the warrany (Ex: 8 hours at project turnover/completion, 9 hours at 3 months, 8 hours at 6months, 8 hours at 1 year, 4 hours at 2 year, 4 hours ar 3 year.).

END OF SECTION

See additional resources for updates

THIS PAGE HAS BEEN INTENTAIONALLY LEFT BLANK.

See additional resources for updates

SECTION 273123

IP ONLY PABX SYSTEM

GENERAL GUIDELINES

1.1 GENERAL

A. This Section defines the general design requirements for a uniform IP ONLY PABX System that shall be followed for all OSFC Technology construction projects.

B. Refer to Section 8500, Technology Systems, 27 13 13, Copper Back Bone Systems and 27 31 13, IP-Enabled PABX System for additional information.

1.2 SECTION INCLUDES

A. Central IP PABX.

B. Attendant Console Terminal.

C. Executive Display Voice Terminal.

D. Standard Display Voice Terminal.

E. Single Line Voice Terminal.

F. Voice Mail with Automated Attendant.

G. E-911 Console.

H. Uninterruptible Power Supply (UPSs).

1.3 QUALITY ASSURANCE

A. All equipment shall be UL listed.

B. Compliance with the National Electric Code.

C. Compliance with FCC rules.

D. Comply with latest NENA E-911 requirements.

1.4 SYSTEM WARRANTY

A. ***The IP PABX System and software shall be fully warranted for three (3) years from date of substantial completion by the contractor and manufacturer. If any defects are found within this warranty period, the defective system component shall be replaced at no extra cost to the Owner for parts or labor. Provide a statement of this warrant with the O&M manuals and to the Director of IT. Make available a service contract offering continuing factory authorized service of this system, after the initial warranty period.***

1.5 GENERAL REQUIREMENTS

A. Each Building's telephone system must provide the following minimum requirements:

1) Support for E-911.

a) Allow the caller to be located down to the specific office/room on a particular floor of a building.

2) Support for the following carrier and Inter-switch interfaces:

a) Digital (T-1, PRI)

b) Session Initiation Protocol (SIP)

c) Analog (POTS) lines

d) Provide carrier circuit interfaces adequate to handle ALL incoming and outgoing calls.

3) Support for Direct inward Dialing (DID).

4) Support for the following endpoints (phones/devices):

a) Digital (TDM)

b) IP (must support non-proprietary H.323 and SIP-compliant devices)

c) Analog (phones/faxes etc.)

d) Endpoints that provide "full duplex speakerphone" capability must be provided in specific rooms.

e) Provide system with capacity for all endpoints required plus 10% spare.

5) Provide support for a minimum of two (2) fax stations per building.

6) Provide UPS.

B. System to have maintenance and administration terminal and remote access capabilities.

C. A common Telephone Switching Platform shall be used across the District to insure inter-operability. In the event that the District already has an established Telephone System that meets OSFC requirements, additional buildings may be added to the District, specifying existing Vendor's system.

D. In the event that no standard system exists for the District, then the OSFC PA shall decide if the first systems bid establish a critical mass and if the multiple vendor requirement can be waived.

1.6 WORK BY LOCAL UTILITIES

A. Coordinate all work with the local and long-distance Service Providers (SPs).

1.7 IP PABX

A. The Central Switching Exchange shall be a fully-digital, IP Based PBX Telephone Switch.

B. The IP PABX must be modular in design.

C. The IP PABX shall be sized according to student population and traffic requirements and shall be equipped with carrier circuit interfaces for incoming/outgoing call lines. The minimum circuits shall be as follows:

1) One PRI or equivalent SIP trunk for up to 100 stations.

2) Two PRIs or equivalent SIP trunks for greater than 100 stations.
3) Additional PRIs or equivalent SIP trunks based on traffic requirements.
4) The use of an analog central office (CO) line interface is acceptable if system is supporting existing analog phone service and as long as adequate line capacity is provided to support call traffic. System must still include digital carrier interface for future growth.

D. The IP PABX shall be equipped with full Name and Number Caller ID functions for incoming and outgoing calls.

E. With few exceptions, the IP Only PABX system shall provide the same basic features and functionality as an IP-Enabled PABX.

F. The IP PABX must be equipped with a minimum of three (3) analog lines to the local Service Provider for E-911 services and PRI backup.
a) Allow the caller to be located down to the specific office/room on a particular floor of a building.

G. Connect the Analog Lines to a Power Failure Transfer (PFT) Unit and supply a minimum of three (3) analog phones, located in the Central Office Area for emergency operation.

H. The common control units for the IP PABX shall be fully duplicated.

I. The media gateways and other ancillary devices shall be distributed across a minimum of at least two (2) units for redundancy. For example, analog interfaces, PRI interfaces, etc. shall be duplicated.

J. For single building configurations, the duplicate Common Control Units, media gateways and other common devices shall all be located in the Main Equipment Room.

K. For multiple building configurations, consideration shall be given to distributing the common control units and media gateways between two buildings.

L. When an IP PABX system is deployed across the District, all carrier circuits and Voice mail and other common Services shall be centralized – a minimum of two central locations is required.

M. Design the District-Wide system to provide for Least-Cost Routing and Toll-Bypass when applicable. Supply additional PRI circuits as required.

N. All buildings shall be equipped with a survivable remote unit that shall continue to provide basic call processing for users via the back-up analog lines. Voice mail will not be required during a WAN Link cut between a remote building and a Core Building.

O. When the Wide Area Network permits, remote buildings shall be configured in such a fashions as to “dual-home” on the two, distributed Central Processing units.

P. With few exceptions, all IP station devices shall be served by a dedicated Work Area Cable and Voice traffic shall be segregated from standard data traffic by providing dedicated 802.3af Power Over Ethernet (POE) Switches for the Voice Network.

Q. The POE switches shall follow the same design rules as the Data Network Switches, namely, one (1) dedicated GBE link to the Data Network Layer-3 Core switch per 24 10/100 ports.

R. The designer shall adjust the quantity of L-3 Core switch ports and associated fiber and UPS units to accommodate the additional POE switches.

S. All IP Phone instruments shall be 802.3af powered from POE Ethernet switches.

T. Due to the advanced features available on some IP Phones, consideration shall be given to locating selected IP instruments on desktops rather than wall mounting the units.

U. Consideration shall be given to supplying additional call processing software to enable user desk-top PCs to interoperate with the IP PABX advanced SIP based presence features (audio and video conferencing, integrated messaging, etc.).

V. Connections between the Data Network and the voice network shall be made via a vendor supplied firewall device.

W. As a minimum, the Call Accounting shall include date, time, duration of call, extension number, account code (if applicable) and number dialed along with software export features to standard spread sheets.

X. The IP PABX telephone system must have the following minimum features:

1) Access Codes.
2) Attendant's Console.
3) Automatic Location Identifier (ALI).
4) Automatic Number Identification Support (ANI).
5) Call Accounting Software and Hardware.
6) Call Conferencing.
7) Call Forwarding on Busy.
8) Call Forwarding External Calls
9) Call Forwarding Internal Calls.
10) Call Hold.
11) Call Pickup.
12) Call Screening.
13) Dialed Number Identification Service (DNIS).
14) Direct Inward Dialing (DID).
15) Distinctive ring tones.
16) Do Not Disturb
17) E-911 and latest NENA support. ***Allow the caller to be located down to the specific office/room on a particular floor of a building.***
18) E-911 Call Recording and Bridging to E-911 Central Console.
19) FCC Registration.
20) Full Caller ID – Incoming/Outgoing.
21) Full duplex, Digital Display, Speaker Phones.
22) Hands Free Intercom – Phone-to-Phone.
23) IEEE 802.3af compliant VoIP Power

24) Least Cost Routing.
25) Maintenance and Administration Terminal.
26) Malicious Call Trace/Hold.
27) Message Waiting Lamp.
28) Paging Interface (minimum 6 zones).
29) Minimum of eight (8) Pre-program buttons.
30) PRI/T-1 Trunking.
31) Remote diagnostics.
32) SIP Signaling Protocol
33) Standards Based, VoIP Phone Support.
34) Support wireless 802.11 VoWLAN phones
35) System Speed Dial.
36) Unified Messaging.
37) VoIP Trunking – H.323 and SIP.

Y. The IP PABX shall be dimensioned to support a minimum ABH traffic capacity of 7.0 ccs per line.

Z. Inter-Building Trunks (Links) between Systems shall be designed using T-1 Lines, PRI Lines or VoIP Trunking. A minimum capacity of 23 inter-building links shall be provided. Dimension all Trunks based on a minimum of P=0.01 Grade of Service.

AA. When a high-speed WAN connection exists, use a VoIP connection between buildings.

BB. Provide IEEE 802.3af compliant Power Injectors/switches for all VoIP Phone instruments.

CC. Each District Building's IP PABX shall be capable of complete stand-alone operation (with the exception of centralized voicemail) in the event that the Inter-Building Trunks (Links) are not operational. Calling operation shall be limited only by the external links (trunks) available,

DD. District-Wide Systems shall function as a single system with Common Features, Centralized Voice Mail, and Centralized Call Detail Recording with a single record per call and the ability for Centralized Attendant Service for the entire District.

EE. When more than one building per District is involved, all incoming and outgoing calls shall be routed over PRI Line(s) connected to a Central IP-Enabled PABX. The Central IP-ENABLED PABX capacity shall be dimensioned to handle all current and planned District buildings.

FF. IP PABX units shall employ a hardened Operating System that is not susceptible to Internet Computer Viruses.

GG. IP PABX units shall be provided with a minimum of 10% spare line/station capacity at initial installation.

HH. The all IP Based system shall maintain the same high level of functionality, redundancy and programmable features as originally specified. Any all-IP system shall employ standards based signaling, instrument powering and redundant call servers in each District Building served by the system.

II. Provide centralized PABX and phone instrument power with a minimum of two (2) Busy-Hour standby capabilities for all PABX equipment. IP Based systems shall also be provided with two (2) Busy-Hour standby capabilities for all powered Switches or Patch Panels located in each Telecommunications Room (TR). Connect the Central Power Supplies to Building Emergency Power when available.

JJ. All IP Instruments and power sources shall be IEEE 802.3af compliant.

KK. All PABX systems shall support IP Inter-building trunking (H.323 or SIP) and the attachment of IP Instruments such as IP Phones, PDAs, Soft Phones and 802.11 Phones.

1.8 ATTENDANT CONSOLE TERMINAL

A. Minimum of 32 Character LCD Display.

B. Display day, date and time.

C. Display call durations.

D. Display caller name and extension/telephone number and incoming caller-ID information

E. Hands free, Full-Duplex, Speakerphone.

F. Shall have a system display panel capable of showing all system extension numbers and their status and capable of extending calls via single touch operation.

G. Provide a minimum of two (2) consoles per building for load sharing and redundancy.

H. Optional soft consoles should be considered by the designer for the attendant.

1.9 ADMINISTRATIVE DISPLAY IP VOICE TERMINAL

A. Provide one administrative phone for all administrative areas, conference rooms, small group rooms, nurse/health office, and special needs rooms.

B. At least sixteen characters display window.

C. At least sixteen programmable keys.

D. Hands free, Full-Duplex Speakerphone.

E. Display caller name and extension/telephone number.

F. Message Waiting Lamp.

G. Pre-programmed E-911 button that automatically puts the phone into a hands-free mode, and initiates a 3-way conference call with the central console, as well as the local 911 center.

H. IEEE 802.3af powered.

1.10 STANDARD DISPLAY DIGITAL VOICE TERMINAL

A. Provide one standard 8-button phone for all classrooms, labs, general offices, and other areas not covered in section 1.9 above.

B. At least sixteen characters display window.

C. At least eight (8) programmable keys.

D. Hands free, Speakerphone. Full Duplex required if One Way Paging Variance is utilized.

E. Display caller name and extension/telephone number.

F. Message Waiting Lamp.

G. Pre-programmed E-911 button that automatically puts the phone into a hands-free mode, and initiates a 3-way conference call with the central console, as well as the local 911 center.

H. IEEE 802.3af powered.

1.11 CONFERENCE PHONE

A. At a minimum, provide Multi-User, Full-Duplex conference Speakerphone for Conference Rooms and/or Principal's Office.

1.12 VoWLAN PHONES

A. Provide a minimum of two Wireless VoIP (VoWLAN) Phone instruments, with carrying case and charger units.

B. Provide integral VoWLAN 802.11e QoS capability or SVP server for VoWLAN QoS.

1.13 VOICE MAIL SYSTEM

A. System shall have the following number of voice ports:
   1) Minimum of 4 ports (450 students).
   2) Minimum of 8 ports (650 students).
   3) Minimum of 12 ports (850 students).

B. System shall have the following capacity:
   1) One voice mailbox per station plus 20% minimum spares.

C. System shall have an automated attendant.

D. System shall be fully integrated with the IP PABX.

E. System shall activate telephone station "message waiting" light.

F. System shall have Integrated Messaging capability. Supply based on District's requirements. Verify E-Mail Server compatibility (Exchange, Notes, Groupwise, etc.)

1.14 E-911 CONSOLE

A. System shall support Call Bridging at Console for all E-911 calls.

B. System shall provide Call Recording for E-911 Calls

C. System shall support full NENA Compliant ANI and ALI data transmission from local Data Base to PSAP. ***Allow the caller to be located down to the specific office/room on a particular floor of a building.***

1.15 UNINTERRUPTIBLE POWER SUPPLIES (UPS)

A. Provide Dual Conversion UPS units for call processing equipment, providing sufficient protection from power anomalies for two (2) busy hours.

B. Provide multiple UPS Units based on expected power load or a single large UPS Unit. Locate the multiple UPS units in the associated equipment racks or locate a larger central UPS unit in the Room.

C. Connect the UPS Units to Building Emergency Generator when available.

D. For buildings without a Generator, supply a four-hour (4) standby.

E. Provide shutdown connections from the UPS for graceful power down in the event of a power failure.

F. Equip the UPS Units with a twist-Lock Power cable and SNMP Management Card.

G. Connect the UPS SNMP Management to the Management VLAN.

H. Coordinate UPS voltage, circuit size, and connection requirements with the Electrical Design Professional.

1.16 INSTALLATION

A. Coordinate complete system installation, and Technology Headend Integration with District and other Technology Trades.

B. Coordinate installation and interconnect with local and long-distance Service Provider (SP). Contractor shall be responsible for all final cross connects and system Data Base loading and verification.

C. Contractor shall connect to, and interface with the in-house paging system and provide paging from any telephone handset.

D. Connect system to IP Data Network and program required VLANs, Firewall and 803.11e support.

E. Interconnect with existing systems via VoIP trunking.

F. Integrate system with District's Numbering Plan.

1.17 SYSTEM PROGRAMMING

A. Contractor shall provide the District/architect with a complete set of forms for the entire system and extension features for final programming.

B. Final programming of the system shall be co-developed between the District/architect and the contractor and must be approved prior to being implemented for system start-up.

C. Contractor shall supply the "latest" software updates as part of the system configuration for ***three (3)*** years after system acceptance.

1.18 TRAINING

A. Provide a minimum of forty (40) hours of training to the District's personnel. Plan for multiple training trips to the site. Training session(s) shall cover the following topics at a minimum:

1. System Equipment Connectivity

2. Device Configurations

3. Operation, maintenance, and upgrade procedures.

B. Training to be arranged with District personnel. 40 hours should be spread out over the length of the warranty (Ex: 8 hours at project turnover/completion, 8 hours at 3 months, 8 hours at 6 months, 8 hours at 1 year, 4 hours at 2 years, 4 hours at 3 year).

C. Training to occur in maximum of 2 hour increments per personnel or groups of personnel.

D. Consider requiring Contractor to provide manufacturer training vouchers for a portion of the training, which are valid during the warranty period.

E. Training shall be by certified manufacturer instructor.

F. Training schedule shall be coordinated with District personnel and their needs.

G. Training plan, time line, and agenda shall be provided to District IT personnel and signed off by District and Contractor.

H. Warranty certificate and agreement shall be provided to District IT personnel at initial training session.

I. Provide a digital video copy of the training sessions

END OF SECTION

See additional resources for updates

THIS PAGE HAS BEEN INTENTIONALLY LEFT BLANK.

SECTION 274119

VIDEO DISPLAY EQUIPMENT

GENERAL GUIDELINES

1.1 GENERAL

A. This Section defines the general design requirements for uniform Interactive Video Display Equipment that shall be followed for all OSFC Technology construction projects.

B. Refer to Section 8500, Technology Systems, and Section 8600, Electrical Systems, for additional information.

1.2 SECTION INCLUDES

A. VIDEO DISPLAY EQUIPMENT
1. Flat Panel Monitor Mounts
2. Flat Panel Monitors
3. Projector Mounts
4. Ultra-Short Throw Interactive Projector
5. Large Venue Projector
6. Interactive Flat Panel Display - Optional

B. CLASSROOM INTERACTIVE EQUIPMENT
1. Interactive Tablets
2. Student Response System
3. Document Camera
4. Webcam

1.3 QUALITY ASSURANCE

A. All equipment shall be UL listed.

B. All equipment and Installation Practices shall comply with the latest ANSI/NFPA-70 National Electric Code.

C. All equipment and Installation Practices shall comply with the Local Electric Code.

D. All equipment and Installation Practices shall comply with the latest InfoComm International Installation Handbook.

E. All equipment and Installation Practices shall comply with the latest BICSI® Telecommunications Distribution Methods Manual (TDMM).

F. All equipment shall comply with the latest ANSI TIA/EIA-568, 569, 606, 607, 862, standards as applicable.

1.4 SYSTEM WARRANTY

A. The Video Display Equipment Systems and associated software shall be warranted by the contractor for a period of three (3) years from date of substantial completion.

1.5 FLAT PANEL MONITORS AND PROJECTOR MOUNTS

A. Provide wall type flat panel mounts with appropriate forward tilt, or fully articulating arm, as required. Provide appropriate provisions for electrical outlet and A/V cables.

B. Provide Ceiling or Wall Mounts for projectors with appropriate provisions for electrical outlet and A/V cables.

C. Utilize security/theft-deterrent mounting hardware on all projectors, displays and mounts as required.

1.6 INTERACTIVE PROJECTORS

A. Ambient light considerations shall be coordinated with the Architect and Electrical Engineer/Lighting Designer to produce a minimum contrast ratio of 10:1. This often requires blocking of daylighting and dimming of electric lights to produce no more than 10-14 vertical foot candles (108-151 lux) on the projection surface.

B. Provide high resolution video/data projectors for each classroom, laboratory, and media center.

C. Conference Rooms may be equipped with either a small venue projector or a flat-panel TV/Monitor.

D. Ultra-short throw interactive projectors are required in classrooms. They shall be capable of being interfaced with any interactive technology in the classrooms.
   1. Verify ADA requirements are met for mounting locations.

E. The aspect ratio of projectors shall be 16:9 or 16:10. Aspect ratios of 4:3 should be used only to accommodate legacy equipment.

F. Provide all projectors with an Ethernet control interface, either through direct connection or via Ethernet-to-RS-232 adaptor. Provide global central management control/tracking software.

G. Small Venue (Classroom/Labs/Small Rooms) Interactive Projectors
   1. The projector shall produce a minimum of 3000 ANSI Lumens for standard projectors or 2500 ANSI Lumens for ultra-short throw projectors.
   2. It shall have a minimum native resolution of 1280 x 800 and be capable of displaying resolutions up to 1080p (720p).
   3. Inputs/Outputs – Shall consist of the following:
      a. HDMI
      b. Computer / component video: D-sub 15 pin
      c. Composite video: RCA
      d. Audio in x 3: RCA (L and R), Mini stereo
      e. Variable audio out: Mini stereo

f. LAN networking: RJ-45
g. Serial: RS-232c
h. Monitor out: D-sub 15 pin
i. USB Type B (USB display, mouse, interactivity)
j. USB Type A (USB memory/document camera)
k. Wireless port 802.11 b/g/n/ac
l. Microphone port
m. EDID capable and HDCP compliant

4. Shall be connected to classroom sound reinforcement system for sound
5. Shall be able to use any interactive software (open architecture)
6. ***Shall be capable of interfacing wirelessly with mobile devices within the classroom.***

H. LARGE VENUE (STUDENT DINING) PROJECTORS

1. The projector shall produce a minimum of 6000 ANSI Lumens.
2. It shall have a minimum native resolution of 1920 x 1200 and be capable of displaying resolutions up to 1080p.
3. Inputs/Outputs – Shall consist of the following:
   a. HDMI
   b. Computer / component video: D-sub 15 pin
   c. Composite video: RCA
   d. Audio in x 3: RCA (L and R), Mini stereo
   e. Variable audio out: Mini stereo
   f. LAN networking: RJ-45
   g. Serial: RS-232c
   h. Monitor out: D-sub 15 pin
   i. USB Type B (USB display, mouse, interactivity)
   j. USB Type A (USB memory/document camera)
   k. Wireless port 802.11 b/g/n/ac
   l. Microphone port
   m. EDID capable and HDCP compliant.
4. Provide a lift system in lieu of a mount, allowing multiple height positions for storage, projection and service. As required.
5. Provide either front or rear screen projection based on District/Architect preferences and/or good projection system design.
6. Coordinate screen (size and type) specifications to provide an integrated design based on best practices and project-specific factors.
7. OSFC baseline funding is for only 1 projector in each large venue area.

1.7 FLAT PANEL TV/MONITOR

A. The Flat Panel TVs/Monitors shall be equipped with a QAM 181-channel tuner and shall have minimum native resolution of 1080p without the use of scan-converters.

B. The minimum Flat Panel TV/Monitor shall be 32 inches.

C. Provide Flat Panel TV/Monitor for Public viewing in Entrances, Corridors and/or Reception areas, small conference/meeting rooms, and Small Self-Contained Classrooms.

D. Provide Flat Panel TV/Monitor Units with Ethernet control connection and central management software.

E. Provide an Ethernet or wireless connection to Digital Media Management System.

1.8 OPTIONAL EQUIPMENT AND SYSTEMS (not baseline)

A. INTERACTIVE TABLETS
1. Considerations and guidelines:
a) Tablets should be specified based on each school's curriculum needs.
b) Assessment should be done about licensing and number of users
c) Charging stations/policies should be considered
d) Considerations regarding the iPad
1) iPads have lower transmit power (10dBm)
2) iPads use a single spatial stream with ***802.11ac***. They are unable to do channel bonding, limiting the link rate to a maximum of 65Mbps
3) iPads have dual band support. They can operate on both 2.4GHz and 5GHz frequencies. They default to the 5GHz band.
2. Recommended screen size is 7" – 12"
3. Touch screen
4. ***Cellular*** Wi-Fi optional
5. Wireless connectivity to all other classroom A/V equipment (interactive projector, etc.)
6. Minimum resolution 1280 x 600
7. Minimum processor 1GHz
8. Minimum storage 16GB
9. Minimum battery life 9 hours

B. STUDENT RESPONSE SYSTEM
1. Should have a full keyboard with direction pad and hot keys
2. Wireless range minimum of 328ft (100m)
3. Operates on batteries or charge by USB connectivity
4. Communication through wireless connection to computer with host software
5. All licenses should be included in specification

C. DOCUMENT CAMERA
1. Minimum 2.0 megapixels
2. Full autofocus lens
3. 3x digital zoom
4. Up to 30 fps live video capture
5. USB 2.0 minimum interface
6. Windows and Mac compatible
7. Open architecture to use multiple application software
8. Capture both digital and printed material

D. WEBCAM
1. Full 1080p live video
2. Minimum of 2 Mbps upload/download
3. H.264 video compression

4. Autofocus lens
5. Built-in mic with auto noise reduction
6. Automatic low-light correction
7. USB 2.0 interface
8. Tri-pod ready

E. A/V CONTROL SYSTEM
1. Full user control of program source device(s), projector, and lights through either web-based application or touch panel.
2. System diagnostics and scheduled operation of media devices via web-based application.

F. Interactive Flat Panel Display (Classrooms/Labs)
1. Backlit LED/LCD display, contrast ratio 3000:1, 3 year warranty.
2. Full HD-1080p with multi-touch (pen or finger) functionality.
3. Inputs/Outputs - Shall consist of the following:
a. HDMI
b. Computer / component video : D sub 15 pin
c. Composite video
d. Audio in x 3 : RCA (L and R), Mini stereo
e. Audio out : RCA (L and R)
f. LAN networking: RJ-45
g. Serial : RS-232C
h. AV input/output: DVI-D
i. USB
j. Wireless connectivity : 802.11 b/g/n/ac
k. EDID capable and HDCP compliant
4. Shall be connected to classroom sound reinforcement system for sound.
5. Shall be able to use any interactive software (open architecture).
6. Shall be able to interface wirelessly with mobile classroom devices (tablets, iPads, etc.).
7. Provide either wall mount or portable cart unit as coordinated with the Design Professional and District.
8. Installer shall be authorized service dealer of the unit.
9. Coordinate District operating system platform with specified manufacturers.
10. Provide integral surge suppression protection with the unit.
11. Technology Designer to determine size of the IFPD based on room size and application.

1.9 INSTALLATION
A. Mount Projectors and Flat Panel TV/Monitors using manufacturer's recommended hardware.
B. Connect Devices to IP Network for Central Control.
C. Adjust all Projectors for proper focus, keystone correction and display size.
D. Install all associated software monitoring and control programs.

1.10 TESTING
A. Verify picture and sound quality on all A/V inputs.
B. Test all associated software control programs.
C. The devices and associated software systems shall be tested end-to-end complete.

See additional resources for updates

1.11 TRAINING

A. Provide a minimum of forty (40) hours of training to the District's personnel. Plan for multiple training trips to the site. Training session(s) shall cover the following topics at a minimum:
   1. System Equipment Connectivity
   2. Device Configurations
   3. Operation, maintenance, and upgrade procedures.

B. Training to be arranged with District personnel. 40 hours should be spread out over the length of the warranty (Ex: 8 hours at project turnover/completion, 8 hours at 3 months, 8 hours at 6 months, 8 hours at 1 year, 4 hours at 2 years, 4 hours at 3 year).

C. Training to occur in maximum of 2 hour increments per personnel or groups of personnel.

D. Consider requiring Contractor to provide manufacturer training vouchers for a portion of the training, which are valid during the warranty period.

E. Training shall be by certified manufacturer instructor.

F. Training schedule shall be coordinated with District personnel and their needs.

G. Training plan, time line, and agenda shall be provided to District IT personnel and signed off by District and Contractor.

H. Warranty certificate and agreement shall be provided to District IT personnel at initial training session.

I. Provide a digital video copy of the training sessions.

END OF SECTION

SECTION 274125

DIGITAL MEDIA MANAGEMENT SYSTEM

GENERAL GUIDELINES

1.1 GENERAL

A. This Section defines the general design requirements for a uniform Digital Media Management System that shall be followed for all OSFC Technology construction projects.

B. Figure 1 describes Typical Digital Media Management System.

C. Refer to Section 8500, Technology Systems, and Section 8600, Electrical Systems, for additional information.

1.2 SECTION INCLUDES

A. DIGITAL MEDIA MANAGEMENT SYSTEM

1. Digital Video On-Demand System.
2. Digital Video Control and Scheduling System.
3. Video Bulletin Board System.
4. Video Camera System.
5. Digital Video Source System.

1.3 QUALITY ASSURANCE

A. All equipment shall be UL listed.

B. All equipment and Installation Practices shall comply with the latest ANSI/NFPA-70 National Electric Code.

C. All equipment Installation Practices shall comply with the Local Electric Code.

D. All equipment shall comply with the latest ANSI-J-STD-607 Commercial Building Grounding (Earthing) and Bonding Requirements for Telecommunications Standard.

E. All equipment and Installation Practices shall comply with the latest BICSI® Telecommunications Distribution Methods Manual (TDMM).

F. All equipment shall comply with the latest ANSI TIA/EIA-568, 569, 606, 607, 862, standards.

1.4 SYSTEM WARRANTY

A. The Digital Media Management System and software shall be fully warranted for three (3) years from date of substantial completion by the contractor and manufacturer. If any defects are found within this warranty period, the defective system component shall be replaced at no extra cost to the Owner for parts or labor. Provide a statement of this warrant with the O&M manuals and to the Director of IT. Make available a service contract offering continuing factory authorized service of this system, after the initial warranty period.

B. Provide advanced replacement for all Digital Media Management Equipment for the three (3) year-period.

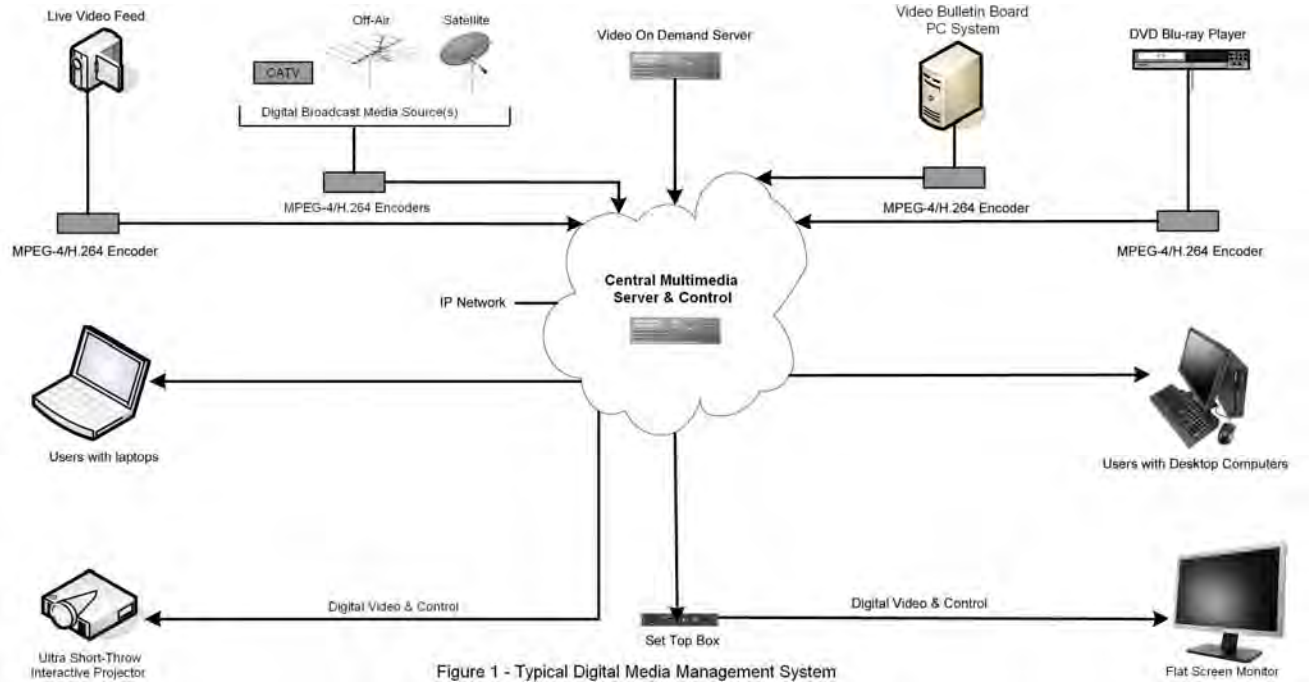

Figure 1 – Typical Digital Media Management System

1.5 DIGITAL VIDEO ON DEMAND SERVER

A. GENERAL

1. The system shall include a centrally based media retrieval system consisting of a video server-based, on-demand, MPEG-4, H.264 streaming video delivery system.
2. System shall include a video billboard message and information system delivered over the network or via Digital Decoders.
3. Control of the Central Media System components shall be via a WEB Browser interface from a PC or from a Digital Set-Top-Box.
4. The Digital Media Management System shall provide remote access to centrally stored digital video sources. The system shall transmit the video as a streaming data file format (H.264 or MPEG-4) over the Ethernet IP Network.
5. The system shall also be capable of direct access to the Internet (MPEG-4 /H.264). Program the required VLANs and provide sufficient 100/1000 Ethernet Ports for connection of all associated devices.
6. Classrooms may be equipped with Set-Top-Box (STB) for receiving streamed and pre-recorded Digital Video Signals. The STB shall be connected to the associated Classroom Projector and Audio System.
7. Provide Central Control System for Projectors for turning units on/off, selecting inputs and streaming scheduled program sources. Unit should turn all Projectors off at end of day.
8. Playback of the Videos at classroom and Lab PCs shall be through a standard WEB Browser interface using a standard Media Player such as Windows Media Player, Real Player or Apple Quick-Time.

B. DIGITAL VIDEO SERVER - VOD

1. Supply a centrally located MPEG-4 and H.264 Video Server Unit consisting of a PC based, Digital Video on Demand Server connected to the Network Electronics on a separate Video VLAN.
2. Consider supplying one large VOD Server per District when WAN bandwidth permits.
3. The Digital Video Server shall support True Video-on-Demand (VOD), Near-Video-on-Demand (NVOD), and Subscription-Video-on-Demand (SVOD).
4. The Digital Video Server shall have a scalable output from a minimum of 25 to 200 – 3 Mbps digital video streams.
5. The Digital Video Server shall have fault-tolerant, RAID storage with minimum capacity of 200 hours with hot-swappable drives.
6. The Digital Video Server shall be connected to the local area network through a minimum of one (1) Gigabit Ethernet connection.
7. Size the VOD Server based on District Video Storage requirements.
8. Hosted service can be utilized as long as all required features are provided.

1.6 DIGITAL VIDEO CONTROL AND SCHEDULING SYSTEM

A. The Video Control and Scheduling System shall provide a simple interface to easily locate available Live and On Demand media assets on Windows PCs, Macs, and Set Top Boxes.

B. Users shall be able to navigate and search for specific videos, select the video, and it immediately begins playing. For On Demand videos, users shall have full Fast Forward and Rewind capabilities.

C. The Video Control and Scheduling System shall provide a calendar-based scheduling system that shall allow users to quickly and easily schedule Live Broadcasts from MPEG encoders, Stored Broadcasts from Video on Demand servers, Recordings, and Conferences. Scripting functionality shall also allow users to set up custom schedules.

1.7 VIDEO BULLETIN BOARD SYSTEM ***- BASELINE***

A. Provide a PC based Bulletin Board system consisting of a Pentium-4 PC, minimum 2.0 GHz, equipped with minimum of 1 Gb of RAM, minimum of a 80 Gb, 7200 RPM Hard Drive, 15 inch Color Monitor/Panel, Multi-output Digital Video Card, Microsoft Windows XP-Pro or later, and Microsoft Office 2010 or later (BBS Software will consist of Power Point Presentations), and PC Anywhere Remote Control Software.

B. Connect Digital Video and Audio output of Bulletin Board PC to A/V MPEG-4/H.264 Encoder input for streaming of Bulletin Board Broadcasts to PCs and Set Top Boxes.

C. Connect the Bulletin Board PC to Network Electronics via a 1 Gb Ethernet Connection.

D. Digital messaging can be part of the Digital Media Management System.

1.8 VIDEO CAMERA SYSTEM ***- BASELINE***

A. Provide 1 digital Video Camera with a wheeled tripod for remote origination of video broadcasts, and announcements. Equip each camera with a dual MPEG 4/H.264 Encoder Unit for broadcasting low and high bit rate digital streams.

B. It shall be possible to broadcast the portable camera signal across the IP Network to Monitors, Projectors and/or PCs in the school or any of the other schools within the District, and simultaneously record the signal if desired. The Camera can be used for Video Announcements, recording of lessons and/or events or as a point-to-point link between any two (2) schools.

1.9 VIDEO BLU-RAY SYSTEM ***- BASELINE***

A. Provide 1 Blu-Ray player located in the Media Center for live streaming and recording. Equip each unit with a dual MPEG 4/H.264 Encoder Unit for broadcasting low and high bit rate digital streams.

1.10 DIGITAL BROADCAST MEDIA SOURCE SYSTEM ***- BASELINE***

A. Provide 6-12 channels of digital broadcast media sources. Connect sources to A/V MPEG-4/H.264 encoder input for streaming to the network.

B. The Technology Designer shall coordinate with the District to determine applicable digital broadcast media sources, such as specific CATV channels, off-air channels and satellite channels, as can be incorporated within the budget.

1.11 INSTALLATION

A. Contractor shall install and program all Digital Video Distribution Equipment and establish all necessary VLANs as required.

1.12 LABELING

A. Cables, jacks, system components, etc. shall be labeled according to ANSI/EIA/TIA-606 specifications and in coordination with the District.

B. All Video Cables shall be equipped with a self-laminating, wrap-around, machine printed label at both ends of the cable.

1.13 TESTING

A. Video Wiring system and associated systems shall be tested end-to-end complete.

1.14 TRAINING

A. Provide a minimum of forty (40) hours of training to the District's personnel. Plan for multiple training trips to the site. Training session(s) shall cover the following topics at a minimum:
   1. System Equipment Connectivity
   2. Device Configurations
   3. Operation, maintenance, and upgrade procedures.

B. Training to be arranged with District personnel. 40 hours should be spread out over the length of the warranty (Ex: 8 hours at project turnover/completion, 8 hours at 3 months, 8 hours at 6 months, 8 hours at 1 year, 4 hours at 2 years, 4 hours at 3 year).

C. Training to occur in maximum of 2 hour increments per personnel or groups of personnel.

D. Consider requiring Contractor to provide manufacturer training vouchers for a portion of the training, which are valid during the warranty period.

E. Training shall be by certified manufacturer instructor.

F. Training schedule shall be coordinated with District personnel and their needs.

G. Training plan, time line, and agenda shall be provided to District IT personnel and signed off by District and Contractor.

H. Warranty certificate and agreement shall be provided to District IT personnel at initial training session.

I. Provide a digital video copy of the training sessions

J. MPEG-4 encode and place a copy of training video on VOD server.

END OF SECTION

SECTION 275121

STUDENT DINING / AUDITERIA SOUND REINFORCEMENT SYSTEM – HIGH SCHOOL

GENERAL GUIDELINES

1.1 GENERAL

A. Refer to Section 8500, Technology Systems, for additional information.

1.2 SECTION INCLUDES

A. Sound Reinforcement System

B. Stage/Production Intercom System

C. Assistive Listening System

D. Monitor/Effects Foldback System

E. Backstage Monitor/Cue System

1.3 QUALITY ASSURANCE

A. NFPA 70 - National Electrical Code.

B. Underwriter's Laboratory.

C. TIA/EIA-607 Telecommunications Grounding.

D. Eleventh Edition (or latest) BICSI Telecommunications Distribution Methods Manual (TDMM).

E. Americans with Disabilities Act (ADA).

F. Federal Communications Commission Part 15.

G. Sound System Engineering (Davis & Patronis) – 3rd Edition 2006.

H. Audio Systems Design and Installation (Giddings) 1990.

1.4 SYSTEM WARRANTY

A. The Student Dining/Auditeria Sound Reinforcement System shall be warranted by the Contractor for a period of ***three (3)*** years from date of substantial completion.

1.5 RELATED SECTIONS

A. Specification section 271543–Audio-Video Communications Horizontal Transport System

B. Specification section 274119 – Video Display Equipment

1.6 MATERIALS

A. Stationary Main Equipment Cabinet with the following rack mounted equipment:
   1. Mixer/Preamplifier
   2. Power Amplifier(s)
   3. Digital Signal Processor(s)
      a. RS-232 Interface for Configuration and Tuning
      b. Equalization Filters – graphic and/or parametric
      c. Compressor/Limiter
      d. Digital Delay for cluster alignment (if applicable)
      e. High and Low Pass and Shelving Filters
      f. Feedback Suppression (may be incorporated in DSP or a stand-alone unit)
      g. Crossover (if bi-amplified speaker system is utilized)
      h. Selectable scene presets
   4. AM/FM radio tuner
   5. Assistive Listening Transmitter (provide with ADA-compliant quantity of receivers)
   6. Monitor/Effects Foldback System amplification and signal processing, including feedback eliminators and equalization
   7. Sequencing AC Power Control System
   8. Passive or Active thermal control
   9. Microphone termination/splitting panel in Main Equipment Cabinet

B. Program Source Cabinet
   1. i-Pod Docking Station
   2. Wireless microphone receivers (minimum qty. 4) and antenna distribution system. Provide with handheld and/or lavaliere microphones.
   3. CD/CD-R/CD-RW/MP3 Player
   4. Digital audio recording device.
   5. Production Intercom Wireless Base Station – Provide with a minimum of four (4) wireless beltpacks and headsets
   6. Input/output jack panel
   7. AC power distribution panel

C. House Speaker Options:
   1. Point source speaker or speaker cluster suspended from structure.
   2. Speaker cluster with delayed satellite speakers.
   3. Distributed full range speakers.
   4. Sub Woofer(s) – (optional)

D. Monitor Speakers – floor wedge or stand-mounted – minimum qty. 2. Provide with rubber-jacketed speaker cables.

E. Distributed Jackplates:
   1. Microphone jackplates (XLR-F connectors).
   2. Monitor/Effects speaker jackplates (Speakon style).
   3. Multi-pin send/return connectors at mixing locations in Control Room and at rear of audience seating area.

F. Multi-pair “snake cable” with individually shielded pairs, connectorized at both ends.

G. Direct box(es) for insertion of line level and laptop sound card signals into microphone jacks.

H. Mixing Console – Minimum requirements: 24-microphone input channels; 2-stereo line level input channels; stereo and mono output busses; 4-aux output busses

I. Hanging microphones – for use over stage (minimum qty. 2).
   1. Microphones, microphone stands, cords, and connectors.

J. Handheld, lavaliere or boundary microphones. (minimum qty. 2) Include floor or desk stands and cords.

1.7 INSTALLATION

A. Install and balance system. Adjust all sound levels for desired operation levels and evenness of coverage.

B. Adjust all wireless equipment and verify coverage areas.

C. Check polarity of all input jacks, signal chains, and speakers.

D. Check gain structure.

E. Connect FM Tuner to external, building mounted FM Antenna Distribution System. Ground antenna in accordance with NEC and TIA/EIA-607.
–OR-
Receive radio reception from Distributed Broadband RF system.

F. Ground equipment cabinet and associated equipment to cabinet-mounted telecommunications grounding buss bar in accordance with NEC and TIA/EIA-607.

G. Install in accordance with manufacturer's installation instructions.

1.8 PERFORMANCE TESTING

A. Frequency response: 80Hz – 14kHz +/- 3 dB.

B. Loudness: At least 96dB-SPL program level with an additional 6 dB Crest factor.

C. Evenness of coverage: Variation of less than +/- 3dB (400Hz to 4000Hz) at all seats.

1.9 TRAINING

A. Provide eight (8) hours training for District's personnel on the operation and maintenance of the system.

B. Provide ***a digital video*** copy of all training.

See additional resources for updates

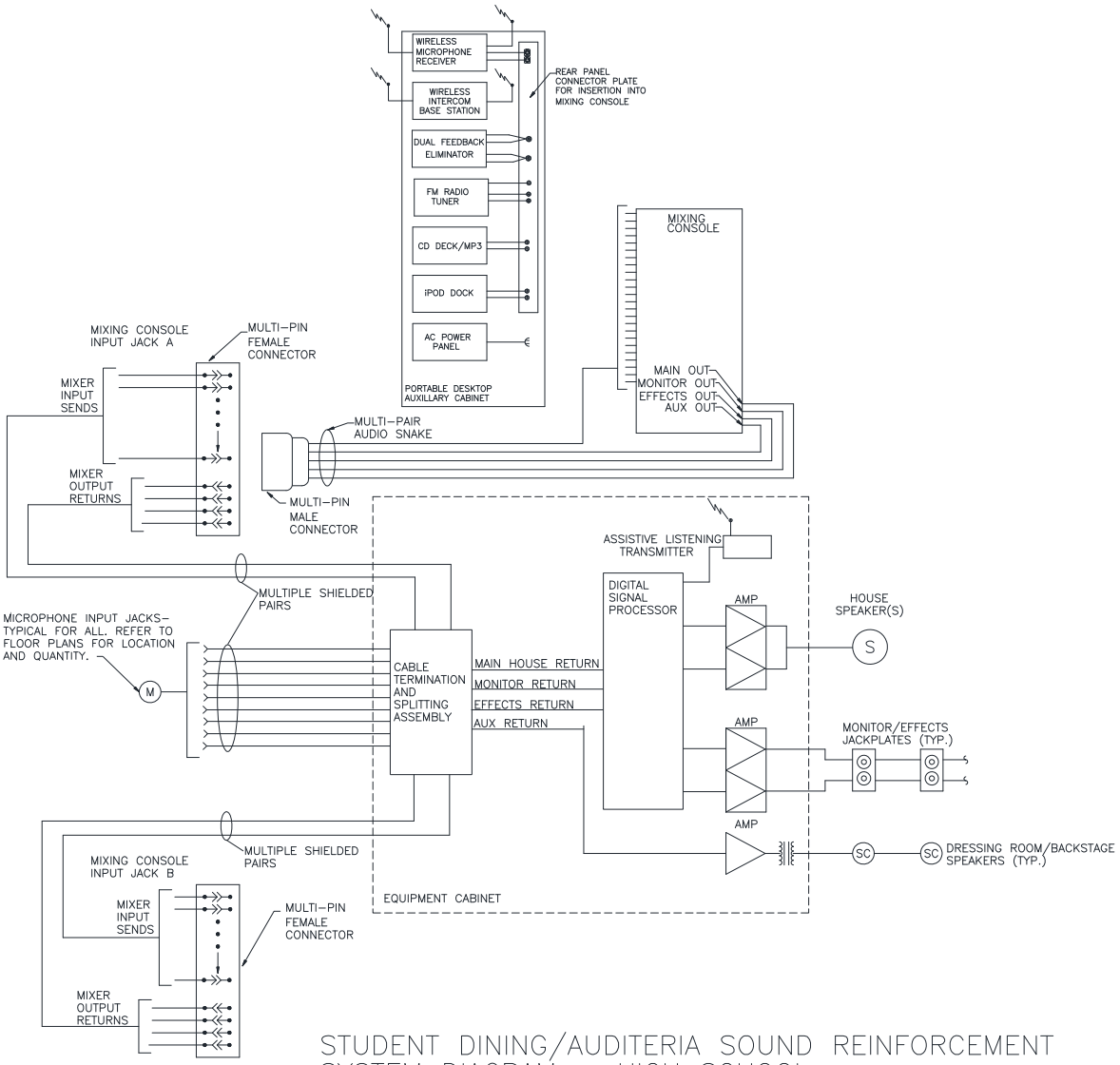

STUDENT DINING/AUDITERIA SOUND REINFORCEMENT SYSTEM DIAGRAM – HIGH SCHOOL

SCALE: NONE (RE: 27 51 21)

NOTE: THIS DIAGRAM IS SCHEMATIC IN NATURE ONLY. IT IS INTENDED TO SHOW GENERAL CONFIGURATION OF THE SYSTEM. MODIFY TO ACCOMMODATE DESIGN PREFERENCES, OWNER NEEDS AND PROJECT CONDITIONS.

END OF SECTION

SECTION 275122

STUDENT DINING / CAFETERIA SOUND REINFORCEMENT SYSTEM

GENERAL GUIDELINES

1.1 GENERAL

A. Refer to Section 8500, Technology Systems, for additional information.

1.2 SECTION INCLUDES

A. Sound Reinforcement System

B. Assistive Listening System

1.3 QUALITY ASSURANCE

A. NFPA 70 - National Electrical Code.

B. Underwriter's Laboratory.

C. TIA/EIA-607 Telecommunications Grounding.

D. Eleventh Edition (or latest) BICSI Telecommunications Distribution Methods Manual (TDMM).

E. Americans with Disabilities Act (ADA).

F. Federal Communications Commission Part 15.

G. Sound System Engineering (Davis & Patronis) – 3rd Edition 2006.

H. Audio Systems Design and Installation (Giddings) 1990.

1.4 SYSTEM WARRANTY

A. The Student Dining/Cafeteria Sound Reinforcement System shall be warranted by the contractor for a period of ***three (3)*** years from date of substantial completion.

1.5 RELATED SECTIONS

A. Specification Section 271543–Audio-Video Communications Horizontal Transport System

B. Specification Section 274119 – Video Display Equipment

1.6 MATERIALS

A. Stationary Main Equipment Cabinet with the following rack mounted equipment:
1. Mixer/Preamplifier (minimum of 8 channels)
2. Power Amplifier(s)
3. Digital Signal Processor(s)
4. RS-232 Interface for Configuration and Tuning
5. Equalization Filters – graphic and/or parametric
6. Compressor/Limiter
7. Digital Delay for cluster alignment (if applicable)
8. High and Low Pass and Shelving Filters
9. Feedback Suppression (may be incorporated in DSP or a stand-alone unit).
10. Crossover (if bi-amplified speaker system is utilized)
11. Selectable scene presets
12. AM/FM radio tuner
13. i-Pod Docking Station
14. CD/CD-R/CD-RW/MP3 Player
15. Digital audio recording device
16. Wireless microphone receivers (Minimum Qty. 1) and antenna distribution
17. Assistive Listening Transmitter (provide with ADA-compliant quantity of receivers)
18. Sequencing AC Power Control System
19. Passive or Active thermal control

B. Speaker Options:
1. Point source speaker or speaker cluster suspended from structure.
2. Speaker cluster with delayed satellite speakers.
3. Distributed full-range speakers.

C. Distributed Jackplates
1. Microphone input jackplates (XLR-F connectors).
2. Balanced, auxiliary-input, jack plate assemblies.

D. Microphones, microphone stands, cords, and connectors (minimum qty. 4).

1.7 INSTALLATION

A. Install and balance system. Adjust all sound levels for desired operation levels and evenness of coverage.

B. Adjust all wireless equipment and verify coverage areas.

C. Check polarity of all speakers and adjust all microphone and source input levels.

D. Connect FM Tuner to external, building mounted FM Antenna and Distribution System. Ground Antenna in accordance with NEC and TIA/EIA-607.
–OR-
Receive radio reception from Distributed Broadband RF system as specified in another spec section.

E. Ground equipment cabinet and associated equipment to cabinet-mounted telecommunications grounding busbar in accordance with NEC and TIA/EIA-607

F. Install in accordance with manufacturer's installation instructions and recommendations.

1.8 PERFORMANCE TESTING

A. Frequency response: 80Hz – 14kHz +/- 3 dB.

B. Loudness: At least 90 dB-SPL program level with an additional 6 dB Crest factor.

C. Evenness of coverage: Variation of less than +/- 3dB (400Hz to 4000Hz) at all seats.

1.9 TRAINING

A. Provide eight (8) hours training for District's personnel on the operation and maintenance of the system.

B. Provide ***a digital video*** copy of all training.

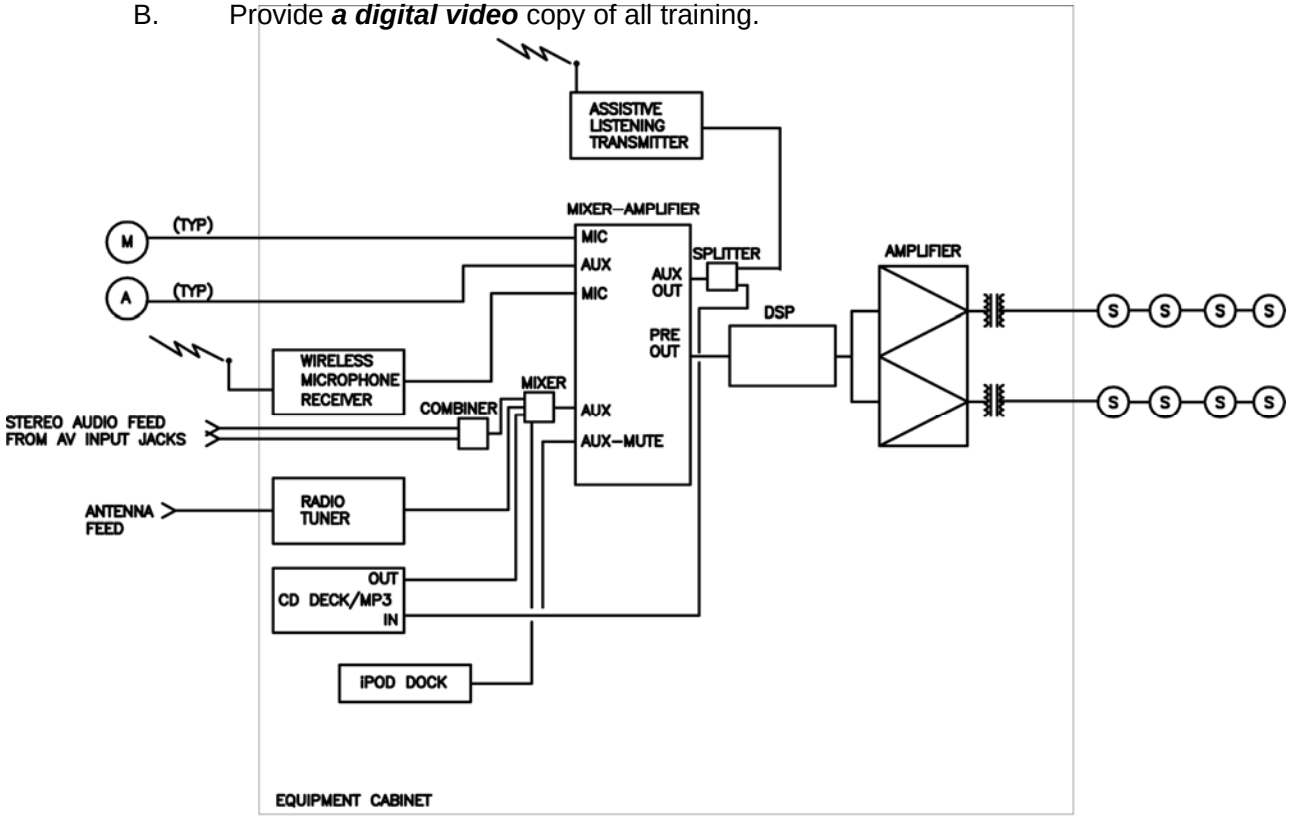

STUDENT DINING/CAFETERIA SOUND REINFORCEMENT SYSTEM DIAGRAM

SCALE: NONE (RE: 27 51 22)

NOTE: THIS DIAGRAM IS SCHEMATIC IN NATURE ONLY. IT IS INTENDED TO SHOW GENERAL CONFIGURATION OF THE SYSTEM. MODIFY TO ACCOMMODATE DESIGN PREFERENCES, OWNER NEEDS AND PROJECT CONDITIONS.

END OF SECTION

SECTION 275123

CENTRAL SOUND AND PAGING SYSTEM

GENERAL GUIDELINES

1.1 GENERAL

A. This section defines the general design requirements for a uniform Central Sound and Paging System that shall be followed for all OSFC Technology construction projects.

B. The basis of design is a full-function, microprocessor-based, two-way intercommunications/zoned paging/program distribution system interfaced with and operated by the telephone system (specified elsewhere).

C. An optional one-way zoned paging system, interfaced and operated by the telephone system (specified elsewhere) shall require an OSFC variance.

D. Refer to Section 8500, Technology Systems, for additional information.

1.2 SECTION INCLUDES

A. Central Sound and Paging System and all related components.

1.3 QUALITY ASSURANCE

A. NFPA 70 – National Electrical Code

B. Underwriter's Laboratory

C. TIA/EIA-607 Telecommunications Grounding

D. Eleventh Edition (or latest) BICSI Telecommunications Distribution Methods Manual (TDMM)

E. Americans with Disabilities Act (ADA)

F. Federal Communications Commission Part 15

G. Sound Systems Engineering (Davis & Patronis) – 3rd Edition 2006

H. Audio Systems Design and Installation (Giddings) 1990

1.4 SYSTEM WARRANTY

A. ***The Central Sound and Paging System shall be fully warranted for three (3) years from date of substantial completion by the contractor and manufacturer. If any defects are found within this warranty period, the defective system component shall be replaced at no extra cost to the Owner for parts or labor. Provide a statement of this warrant with the O&M manuals and to the Director of IT. Make available a service contract offering continuing factory authorized service of this system, after the initial warranty period.***

1.5 RELATED SECTIONS

A. Specification section 275313 – Clock Systems

B. Specification section 273113 – IP-Enabled PABX System
OR Specification section 273123 – IP-Only PABX System

1.6 MICROPROCESSOR-BASED TWO-WAY INTERCOM / PAGING / PROGRAM DISTRIBUTION SYSTEM (Base Design)

A. PABX System Interface

B. Administrative communications console – located in main office or at equipment headend

C. Microprocessor-based with RS-232 Interface for setup and/or control

D. Minimum eight (8) paging and time tone distribution zones

E. Internal time-tone schedule programming and software

F. Synchronization with clock system

G. Input signal prioritization

H. Dedicated home-run speaker circuits from each classroom or special function room (gymnasiums, dining rooms, multi-purpose rooms, exterior spaces, etc.). Call button cabling is included in baseline system whether the call button is installed or not. Extend to speaker location if call button is not installed.

I. Base Line - Call origination switches or handsets in each classroom with annunciator display in central school reception office. Variance required if District elects not to include. Technology Designer to review system with District, determine need for conduit/box rough-ins for future if District elects not to include in project via variance.

1.7 ONE-WAY ZONED PAGING SYSTEM (Optional System Requires Variance)

A. PABX System Interface.

B. Microprocessor-based, zoned paging/program distribution system

C. Minimum of six (6) paging zones

D. Distribution of class-change time tones as scheduled by Clock System

E. Input signal prioritization

F. One-Way Zoned Paging System Options:

1. High impedance, constant voltage system with centrally located power amplifiers and passive speakers with 25-volt transformers. Each classroom speaker circuit is to be individually wired and extended to head end equipment. Corridor and common area speakers are to be grouped according to zones.

See additional resources for updates

2. Low-voltage, amplified speakers with central power supplies and star-wired CAT3 cabling system terminated on 110-style cross-connect blocks, located on the backboard in main Equipment Room (ER). Each speaker wired with dedicated, individual home-run cable. Use pair 1 for paging signal and pairs 2-4 for power.

G. Central paging power supplies based on system load. Connect to Main Equipment Room (ER) UPS unit, powered by building emergency generator circuit(s).

1.8 COMPONENTS COMMON TO ALL SYSTEMS:

A. PROGRAM SOURCE CABINET - Locate a wall-mounted or desktop cabinet in the central school reception office area and place within the cabinet:
1. i-Pod Docking Station (optional)
2. Weather radio and associated antenna (optional)
3. CD player or changer
4. AM/FM radio connected to the building antenna/RF distribution system
5. Monitor speaker panel for program cueing and preview
6. Connect audio outputs to audio inputs on the paging adapter (when applicable)

B. EMERGENCY/EVACUATION ALARM TONE PANEL
1. Locate in central school reception office area – either as a stand-alone wall-mounted device or within Program Source Cabinet.
2. Minimum of three (3) clearly labeled switches to activate distinct tones: EMERGENCY, EVACUATION, ALL-CLEAR.
3. Assign highest priority level

C. ALL-CALL PAGING MICROPHONE
1. Locate in central school reception office area. Use of receptionist's telephone handset is permissible, if acceptable to the school.

D. Locate a minimum of one (1) paging speaker or horn in all building rooms, including Mechanical areas. Base the quantity of speakers/horns on the required signal level and the size of the area to be covered.

E. Speaker and horn types:
1. Flush-mounted ceiling speakers with all metal protective dome enclosures and ceiling bridge support.
2. Surface-mount wall or ceiling speakers
3. Compression driver paging horns in gymnasiums, shop areas, mechanical rooms, exterior of building (weather-proof type) and other areas with high ambient sound levels.
4. Wall mounted volume controls in meeting rooms and other District specified areas.

1.9 INSTALLATION

A. Install and balance the paging system volume levels according to ambient noise levels.

B. Integrate with Telephone System PABX for access to zone paging and intercom (if applicable) functions.

C. Establish building paging zones as directed by the School District.

D. Provide programming and setup of paging zones, signal priorities, and bell (time tone) schedule.

E. Connect to building antenna (if applicable) and ground in accordance with NEC and TIA/EIA-607.

F. Install in accordance with manufacturer's installation instructions and recommendations.

1.10 TRAINING

A. Provide a minimum of forty (40) hours of training to the District's personnel. Plan for multiple training trips to the site. Training session(s) shall cover the following topics at a minimum:

1. System Equipment Connectivity

2. Device Configurations

3. Operation, maintenance, and upgrade procedures.

B. Training to be arranged with District personnel. 40 hours should be spread out over the length of the warranty (Ex: 8 hours at project turnover/completion, 8 hours at 3 months, 8 hours at 6 months, 8 hours at 1 year, 4 hours at 2 years, 4 hours at 3 year).

C. Training to occur in maximum of 2 hour increments per personnel or groups of personnel.

D. Consider requiring Contractor to provide manufacturer training vouchers for a portion of the training, which are valid during the warranty period.

E. Training shall be by certified manufacturer instructor.

F. Training schedule shall be coordinated with District personnel and their needs.

G. Training plan, time line, and agenda shall be provided to District IT personnel and signed off by District and Contractor.

H. Warranty certificate and agreement shall be provided to District IT personnel at initial training session.

I. Provide a digital video copy of the training sessions.

See additional resources for updates

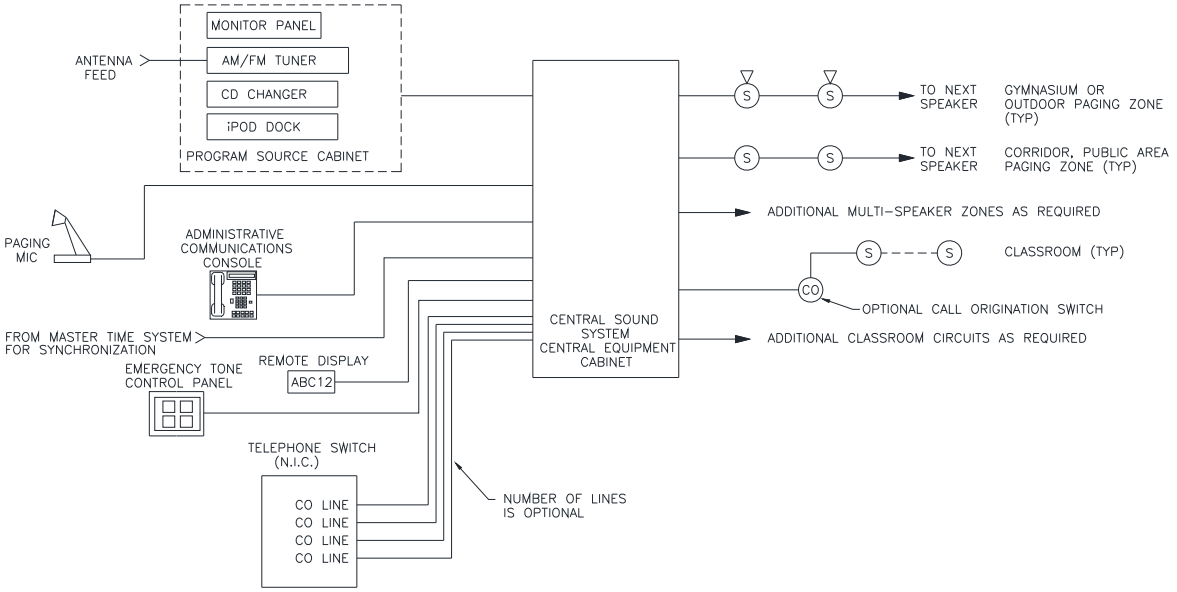

CENTRAL SOUND/INTERCOM SYSTEM DIAGRAM (BASELINE SYSTEM)

SCALE: NONE (RE: 27 51 23A)

NOTE: THIS DIAGRAM IS SCHEMATIC IN NATURE ONLY. IT IS INTENDED TO SHOW GENERAL CONFIGURATION OF THE SYSTEM. MODIFY TO ACCOMMODATE DESIGN PREFERENCES, OWNER NEEDS AND PROJECT CONDITIONS.

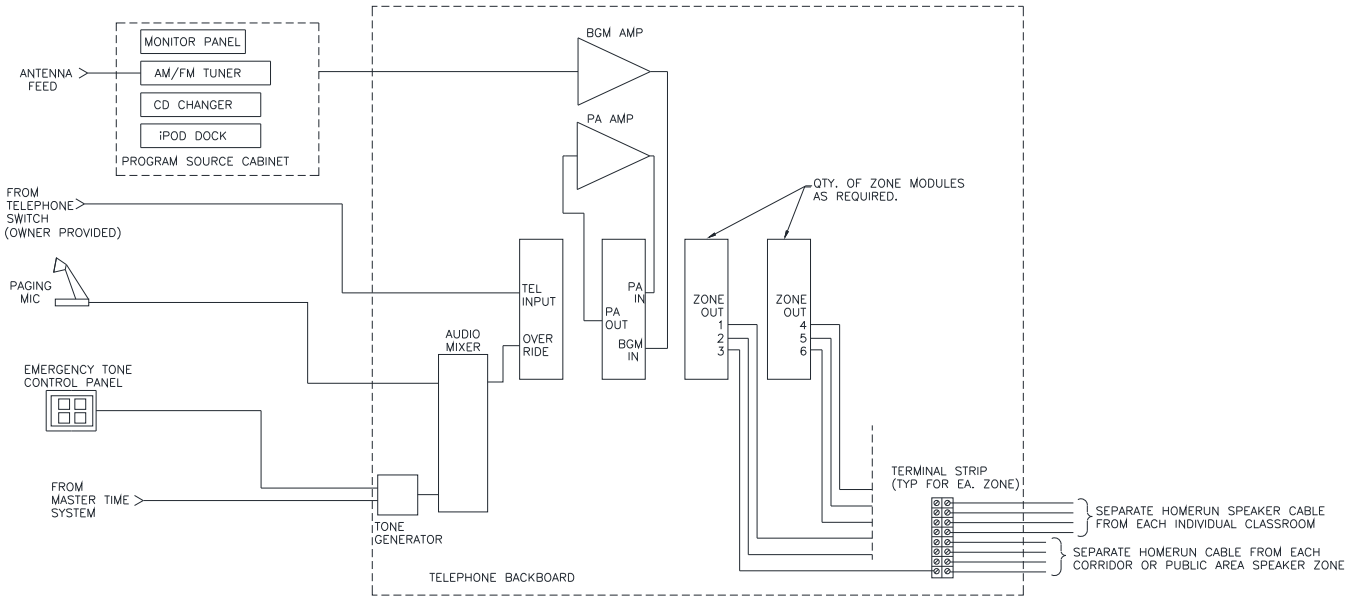

CENTRAL SOUND PAGING/PROGRAM DISTRIBUTION SYSTEM DIAGRAM – PASSIVE SPEAKERS

SCALE: NONE (RE: 27 51 23B) (OPTIONAL – REQUIRES VARIANCE)

NOTE: THIS DIAGRAM IS SCHEMATIC IN NATURE ONLY. IT IS INTENDED TO SHOW GENERAL CONFIGURATION OF THE SYSTEM. MODIFY TO ACCOMMODATE DESIGN PREFERENCES, OWNER NEEDS AND PROJECT CONDITIONS.

See additional resources for updates

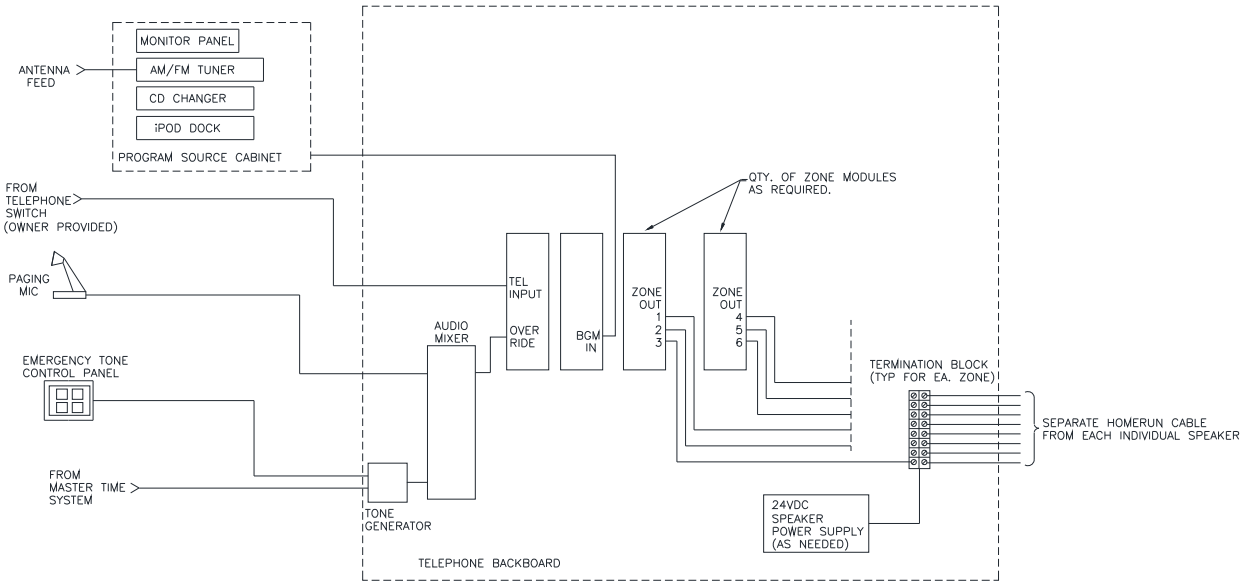

CENTRAL SOUND PAGING/PROGRAM DISTRIBUTION SYSTEM DIAGRAM – POWERED SPEAKERS

SCALE: NONE (RE: 27 51 23C) (OPTIONAL – REQUIRES VARIANCE)

NOTE: THIS DIAGRAM IS SCHEMATIC IN NATURE ONLY. IT IS INTENDED TO SHOW GENERAL CONFIGURATION OF THE SYSTEM. MODIFY TO ACCOMMODATE DESIGN PREFERENCES, OWNER NEEDS AND PROJECT CONDITIONS.

END OF SECTION

See additional resources for updates

THIS PAGE HAS BEEN INTENTIONALLY LEFT BLANK.

SECTION 275124

GYMNASIUM SOUND REINFORCEMENT SYSTEM

GENERAL GUIDELINES

1.1 GENERAL

A. This section defines the general design requirements for a uniform Gymnasium Sound Reinforcement System that shall be followed for all OSFC Technology construction projects – High School, Middle School, and Elementary School facilities.

B. The variations as related to school type are defined in Parts 2 and 3 of this guideline.

C. Refer to Section 8500, Technology Systems, for additional information.

1.2 SECTION INCLUDES

A. Gymnasium Sound Reinforcement System and all related components.

1.3 QUALITY ASSURANCE

A. NFPA 70 - National Electrical Code.

B. Underwriter's Laboratory.

C. TIA/EIA-607 Telecommunications Grounding.

D. Eleventh Edition (or latest) BICSI Telecommunications Distribution Methods Manual (TDMM).

E. Americans with Disabilities Act (ADA).

F. Federal Communications Commission Part 15.

G. Sound System Engineering (Davis & Patronis) – 3rd Edition 2006.

H. Audio Systems Design and Installation (Giddings) 1990.

1.4 SYSTEM WARRANTY

A. The Gymnasium Sound Reinforcement System shall be warranted by the contractor for a period of ***three (3)*** years from date of substantial completion.

See additional resources for updates

1.5 MATERIALS

A. Stationary Main Equipment Cabinet with the following rack mounted equipment:
   1. Mixer/Preamplifier
   2. Power Amplifier(s)
   3. Digital Signal Processor(s)
      a) RS-232 Interface for Configuration and Tuning
      b) Equalization Filters – graphic and/or parametric
      c) Compressor/Limiter
      d) Digital Delay for cluster alignment
      e) High and Low Pass and Shelving Filters
      f) Feedback Suppression (may be incorporated in DSP or a stand-alone unit)
      g) Crossover (if bi-amplified speaker system is utilized)
      h) Selectable scene presets
   4. AM/FM radio tuner
   5. Digital audio recording device.
   6. Assistive Listening Transmitter (provide with ADA-compliant quantity of receivers)
   7. Sequencing AC Power Control System
   8. Passive or Active thermal control

B. Mobile Equipment Cabinet shall contain the following equipment for mic level signal insertion into a wall or floor mounted microphone jack:
   1. Rack-mounted mixer with mic level output
   2. Wireless microphone receiver with handheld and/lor lavaliere microphone
   3. CD/CD-R/CD-RW/MP3 Player
   4. i-Pod Docking Station
   5. Input/output jack panel
   6. AC power distribution panel
   7. Note: In Middle and Elementary School Gymnasium systems, the mobile equipment cabinet may be eliminated with the associated components being located in the Stationary Equipment Cabinet.

C. Speaker cluster or distributed speakers suspended from structure.
   1. Middle School and Elementary School Gymnasium speaker systems shall provide even coverage of both the entire floor area and seating areas.
   2. High School Gymnasium speaker systems shall provide switchable speaker zones as follows: Home Bleachers, Visitors Bleachers, Floor, and Mezzanine (where applicable). The zone selection shall be performed via selector switches in the Stationary Equipment Cabinet.

D. Microphone input jack at scorer's table.

E. Distributed mic/aux level input jacks on end walls –OR- mic level input jacks only (provide with aux/line level-to-microphones level direct box(es).

1.6 INSTALLATION

A. Install and balance system. Adjust all sound levels for desired operation levels and evenness of coverage.

B. Adjust all wireless equipment and verify coverage areas.

C. Check polarity of all speakers and adjust all microphone and source input levels.

D. Connect FM Tuner to external, building mounted FM Antenna and Distribution System. Ground Antenna in accordance with NEC and TIA/EIA-607. –OR- Receive radio reception from Distributed Broadband RF system as specified in another spec section.

E. Ground equipment cabinet and associated equipment to cabinet-mounted telecommunications grounding buss bar in accordance with NEC and TIA/EIA-607.

F. Install in accordance with manufacturer's installation instructions and recommendations.

1.7 PERFORMANCE TESTING

A. Frequency response: 100Hz – 14kHz +/- 3 dB

B. Loudness: High School Varsity Gym: At least 100dB-SPL program level with an additional 6dB Crest factor; Middle, Elementary School and Auxiliary Gym: At least 90dB-SPL program level with an additional 6 dB Crest factor

C. Evenness of coverage: Variation of less than +/- 3 dB (400Hz to 4000Hz) at all seats.

1.8 TRAINING

A. Provide minimum eight (8) hours training for District's personnel on the operation and maintenance of the system.

B. Provide ***a digital video*** copy of all training.

(See diagrams on next page)

See additional resources for updates

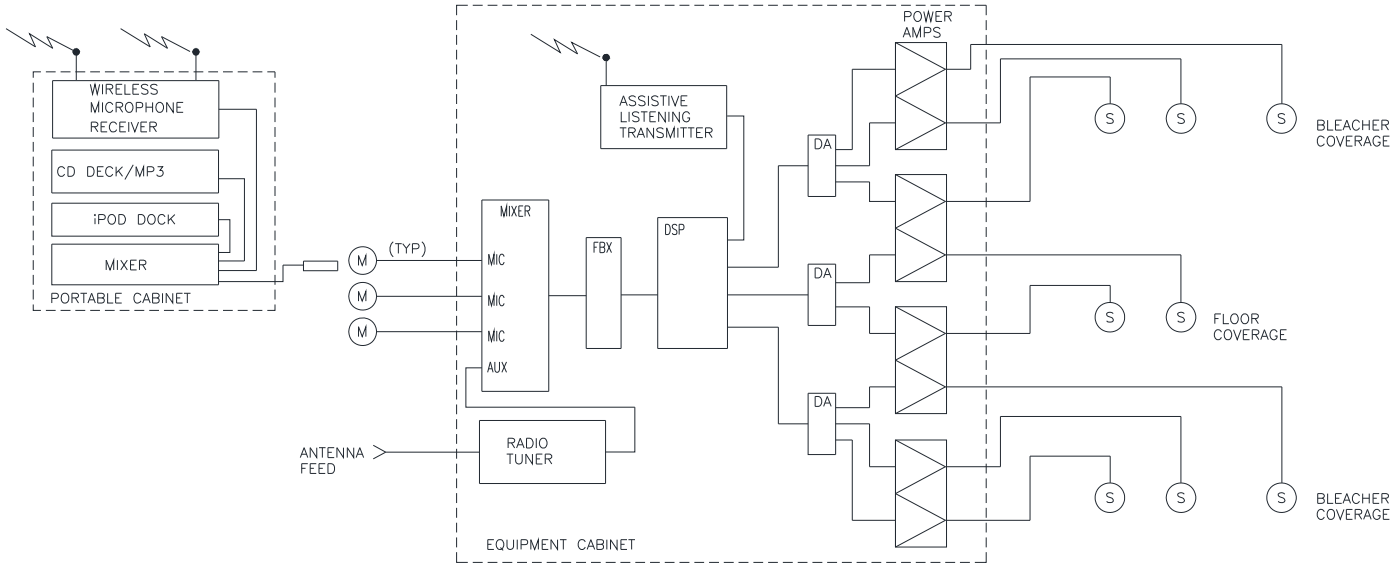

HS GYMNASIUM SOUND SYSTEM DIAGRAM

SCALE: NONE (RE: 27 51 24A)

NOTE: THIS DIAGRAM IS SCHEMATIC IN NATURE ONLY. IT IS INTENDED TO SHOW GENERAL CONFIGURATION OF THE SYSTEM. MODIFY TO ACCOMMODATE DESIGN PREFERENCES, OWNER NEEDS AND PROJECT CONDITIONS.

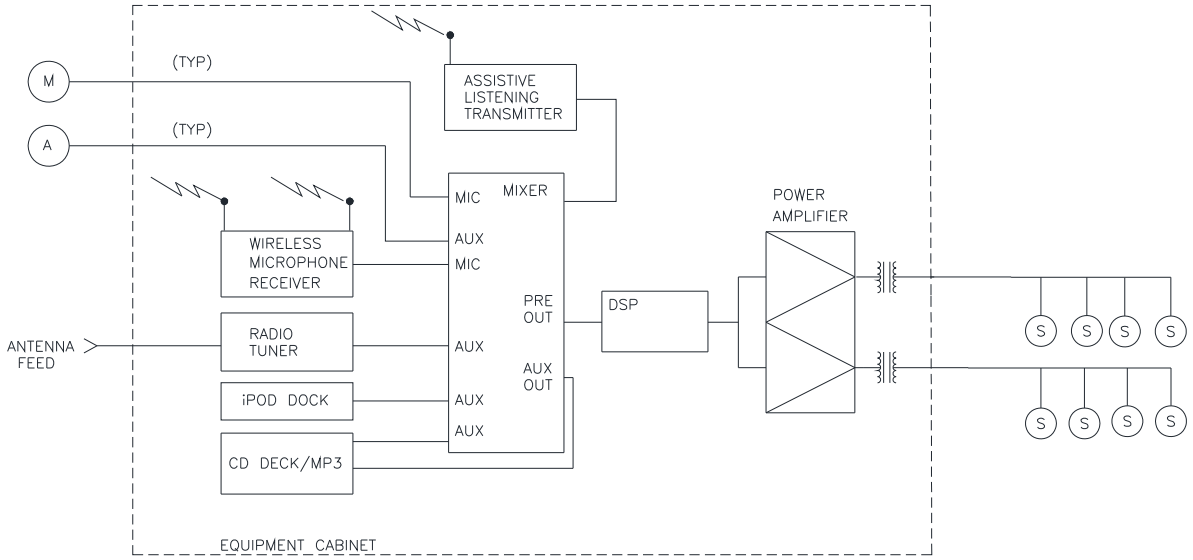

MS/AUX GYMNASIUM SOUND SYSTEM DIAGRAM

SCALE: NONE (RE: 27 51 24B)

NOTE: THIS DIAGRAM IS SCHEMATIC IN NATURE ONLY. IT IS INTENDED TO SHOW GENERAL CONFIGURATION OF THE SYSTEM. MODIFY TO ACCOMMODATE DESIGN PREFERENCES, OWNER NEEDS AND PROJECT CONDITIONS.

END OF SECTION

See additional resources for updates

SECTION 275125

MUSIC ROOM AUDIO PROGRAM PLAYBACK SYSTEM - MIDDLE SCHOOL

GENERAL GUIDELINES

1.1 GENERAL

A. Refer to Section 8500, Technology Systems, for additional information.

1.2 SECTION INCLUDES

A. Music room sound system and components for playback of audio program material.

1.3 QUALITY ASSURANCE

A. NFPA 70 - National Electrical Code.

B. Underwriter's Laboratory.

C. TIA/EIA-607 Telecommunications Grounding.

D. Eleventh Edition (or latest) BICSI Telecommunications Distribution Methods Manual (TDMM).

E. American with Disabilities Act.

F. Federal Communications Commission Part 15.

G. Sound System Engineering (Davis & Patronis) – 3rd Edition 2006.

H. Audio Systems Design and Installation (Giddings) 1990.

1.4 SYSTEM WARRANTY

A. The Sound System shall be warranted by the contractor for a period of ***three (3)*** years from date of substantial completion.

1.5 MATERIALS

A. Mobile or permanently mounted main equipment rack.
   1. Stereo Mixer or Source Selection Device – rack-mounted.
   2. Dual channel Amplifier.
   3. Dual channel octave band equalizer.
   4. CD/CD-R/CD-RW/MP3 Player.
   5. i-Pod Docking Station.
   6. Input Jack panel for insertion of external sources.

B. Wall mounted or tripod mounted speakers – stereo pair.

C. Wall-mounted speaker jack plate – for connection of amplifier in mobile rack to permanently-mounted speakers.

See additional resources for updates

1.6 INSTALLATION

A. Install and balance system volume levels.

B. Check polarity of all speakers.

C. Install in accordance with manufacturer's installation instructions and recommendations.

1.7 TRAINING

A. Provide four (4) hours training for District's personnel on the operation and maintenance of the system.

B. Provide ***a digital video*** copy of all training.

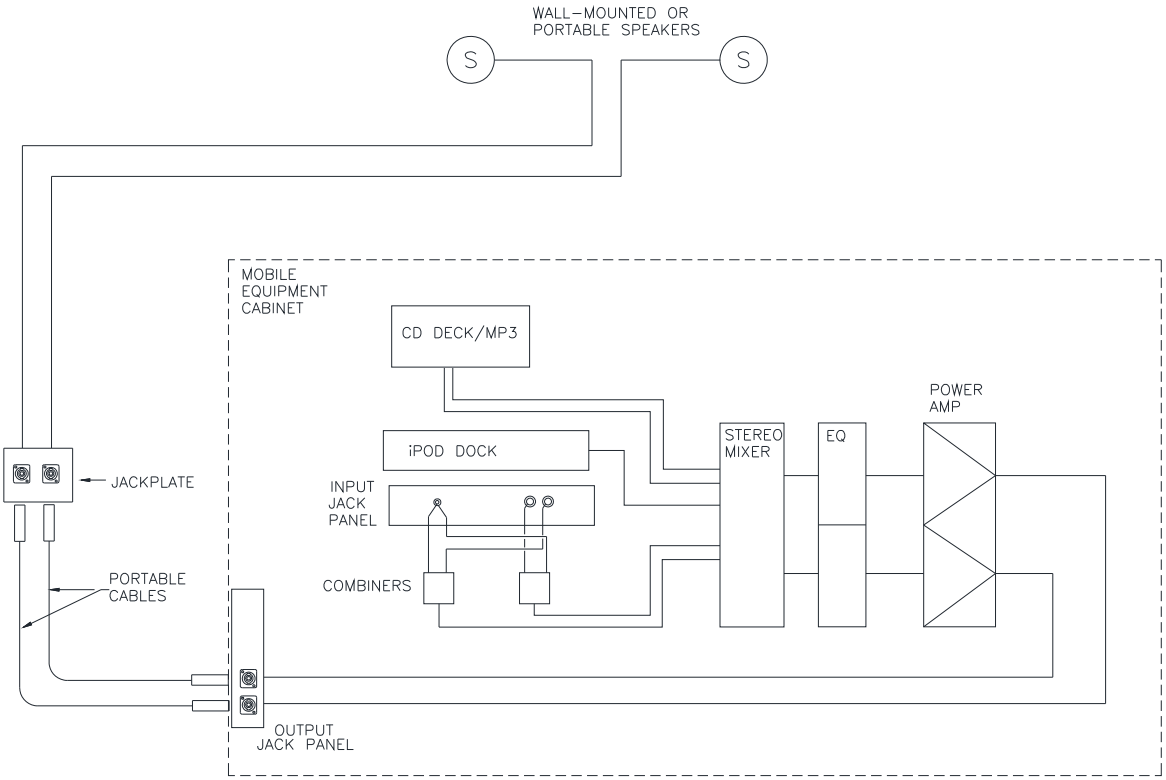

NOTE: SINGLE MOBILE EQUIPMENT CABINET SHARED BETWEEN VOCAL & INSTRUMENTAL ROOMS.

NOTE: THIS DIAGRAM IS SCHEMATIC IN NATURE ONLY. IT IS INTENDED TO SHOW GENERAL CONFIGURATION OF THE SYSTEM. MODIFY TO ACCOMMODATE DESIGN PREFERENCES, OWNER NEEDS AND PROJECT CONDITIONS.

MS MUSIC ROOM PLAYBACK SYSTEM DIAGRAM

SCALE: NONE (RE: 27 51 25)

END OF SECTION

SECTION 275126

MUSIC ROOM AUDIO RECORDING/PLAYBACK SYSTEM - HIGH SCHOOL

GENERAL GUIDELINES

1.1 GENERAL

A. Refer to Section 8500, Technology Systems, for additional information.

1.2 SECTION INCLUDES

A. Music room sound system and components for recording and playback of audio program material.

1.3 QUALITY ASSURANCE

A. NFPA 70 - National Electrical Code.

B. Underwriter's Laboratory.

C. TIA/EIA-607 Telecommunications Grounding.

D. Eleventh Edition (or latest) BICSI Telecommunications Distribution Methods Manual (TDMM).

E. American with Disabilities Act.

F. Federal Communications Commission Part 15.

G. Sound System Engineering (Davis & Patronis) – 3rd Edition 2006.

H. Audio Systems Design and Installation (Giddings) 1990.

1.4 SYSTEM WARRANTY

A. The Sound System shall be warranted by the contractor for a period of ***three (3)*** years from date of substantial completion.

1.5 MATERIALS

A. Mobile or permanently mounted main equipment rack.
   1. Stereo microphone mixer/pre-amplifier – rack-mounted.
   2. Recording Input patch panel for insertion of external microphones or mixing consoles.
   3. Stereo program playback mixer or source selection device – rack-mounted.
   4. Program source, playback patch panel for insertion of external playback devices.
   5. Dual channel amplifier.
   6. Dual channel, octave band equalizer.
   7. CD/CD-R/CD-RW/MP3 Player

See additional resources for updates

8. i-Pod Docking Station.
9. Digital audio recording device
10. Stereo hanging and/or floor stand microphones as required.

B. Wall mounted or tripod mounted speakers – stereo pair.

C. Wall mounted speaker jack plate – for connection of amplifier in mobile rack to permanently mounted speakers.

1.6 INSTALLATION

A. Install and balance system volume levels.

B. Check polarity of all speakers and microphones.

C. Install in accordance with manufacturer's installation instructions and recommendations.

1.7 TRAINING

A. Provide four (4) hours training for District's personnel on the operation and maintenance of the system.

B. Provide ***a digital video*** copy of all training.

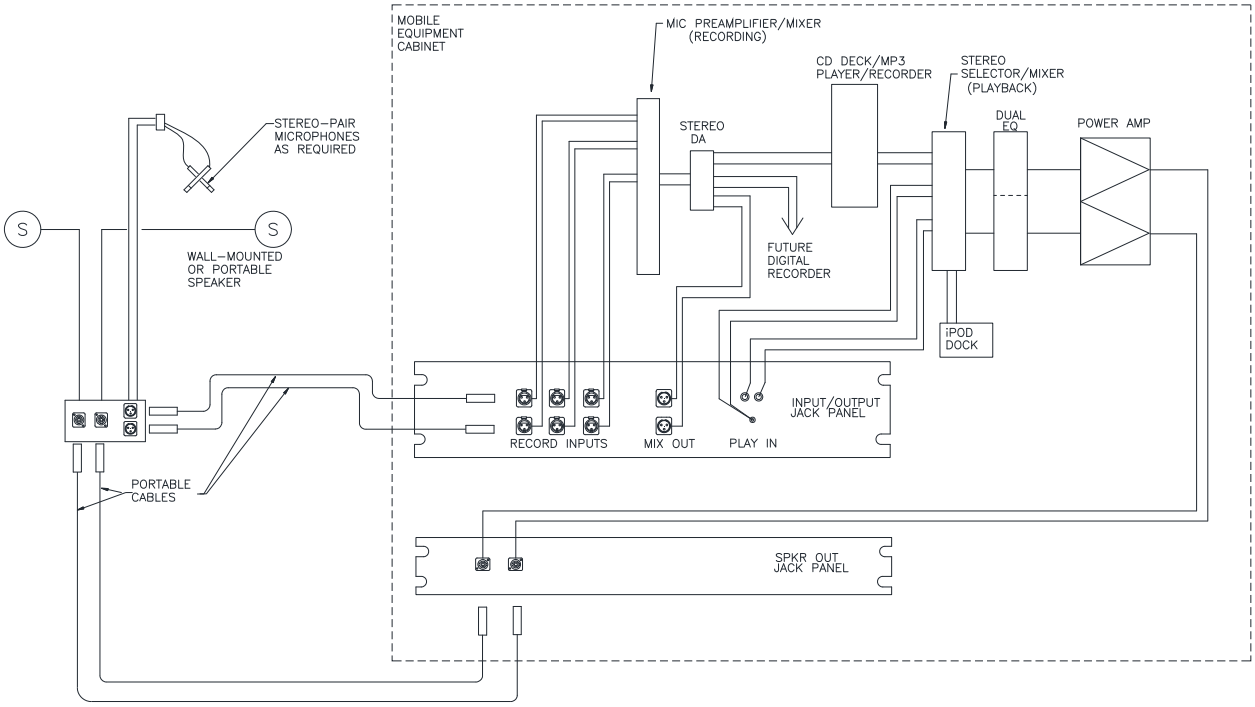

HS MUSIC ROOM RECORD/PLAYBACK SYSTEM DIAGRAM

SCALE: NONE (RE: 27 51 26)

NOTE: THIS DIAGRAM IS SCHEMATIC IN NATURE ONLY. IT IS INTENDED TO SHOW GENERAL CONFIGURATION OF THE SYSTEM. MODIFY TO ACCOMMODATE DESIGN PREFERENCES, OWNER NEEDS AND PROJECT CONDITIONS.

END OF SECTION

SECTION 275127

CLASSROOM SOUND REINFORCEMENT SYSTEM

GENERAL GUIDELINES

1.1 GENERAL

A. This Section defines the general design requirements for a uniform Classroom Sound Reinforcement System that shall be followed for all OSFC Technology construction projects.

B. Refer to Section 8500, Technology Systems for additional information.

1.2 SECTION INCLUDES

A. Classroom sound reinforcement system and components.

1.3 QUALITY ASSURANCE

A. NFPA 70 – National Electrical Code.

B. Underwriter's Laboratory.

C. Latest ANSI TIA/EIA-568, 569, 606, 607 Standards and Eleventh Edition (or later).

D. Eleventh Edition (or latest) BICSI Telecommunications Distribution Methods Manual (TDMM).

E. American with Disabilities Act.

F. Federal Communications Commission Part 15.

1.4 SYSTEM WARRANTY

A. The Sound System shall be warranted by the contractor for a period of ***three (3)*** years from date of substantial completion.

1.5 CLASSROOM SOUND REINFORCEMENT SYSTEM

A. IR or RF Receiver/Amplifier, equipped with:

1. Minimum of 30-Watts RMS Watts total output.
2. Minimum of 50-20 KHz frequency response.
3. Two (2) wireless microphone input channels with individual volume controls.
4. Tone Controls or Equalizer.
5. Minimum of three (3) auxiliary line inputs with individual volume controls.
6. Minimum of one (1) line output for optional ADA, wireless headphone system.
7. System Power Supply.
8. Power Switch.
9. Minimum of two (2) wireless microphone frequencies.
10. Minimum of one (1) ceiling-mounted, Infrared sensor or RF antenna with plenum rated cabling.

11. One (1) Lavaliere or collar microphone, with NiMH rechargeable batteries and charger.
12. One (1) Handheld microphone, with NiMH rechargeable batteries and charger.
13. Minimum of four (4) acoustical ceiling mounted, 360-degree dome speakers with all metal acoustical back enclosure and ceiling tile bridge, minimum 15-Watt capacity and minimum of 65-20KHz frequency response.
14. Receiver/Amplifier must be capable of being placed in Instructor's casework or cabinet mounted with no loss of infrared signal strength.
15. Unit must provide uniform pickup from the Instructor's microphone throughout the classroom.
16. Provide means for the central paging system to mute or override the classroom sound reinforcement system when a central page occurs.
17. Both IR or encrypted RF technologies are acceptable, providing transmission does not interfere with reception in other rooms. Multi-channel, encrypted RF systems shall provide auto frequency selection.

B. Optional – Provide quantity of two (2) FM/Bluetooth Assisted Listening Systems interfacing with Classroom Sound Reinforcement System per school building.

1.6 INSTALLATION

A. Install in accordance with manufacturer's installation instructions.

B. Per Speaker, provide minimum of 16 AWG, CMP rated speaker wire. Wire gauge based on cable lengths and power ratings.

C. Route speaker wires through associated faceplate Space speakers in classroom to provide uniform coverage.

D. For rooms using Overhead Mounted Projectors:
1. Provide a wall bracket/shelf for mounting Infrared Receiver/Amplifier or mounted in cabinet or casework.
2. Provide Line Level cabling from Instructor's PC, DVD/Blu-Ray Unit and MPEG Set-Top-Box Line Outputs to Auxiliary Line Inputs on Infrared Receiver/Amplifier.
3. Balance and adjust all volume levels.
4. Check uniform polarity of speakers.

E. Add additional speakers and infrared sensors in large classrooms, as required, to maintain complete coverage.

F. Classroom Sound Reinforcement system shall be installed in all classrooms/labs for K-12.

G. Classroom Sound Reinforcement system shall be integrated with the classroom A/V system.

1.7 TRAINING

A. Provide four (4) hours training for District's personnel on the operation and maintenance of the system.

B. Provide ***a digital video*** copy of all training.

END OF SECTION

SECTION 275313

CLOCK SYSTEMS

GENERAL GUIDELINES

1.1 GENERAL

A. This Section defines the general design requirements for a uniform Building-wide Synchronized Clock System that shall be followed for all OSFC Technology construction projects.

B. The options are defined in Parts 2 and 3 of this guideline.

C. Refer to Section 8500, Technology Systems, for additional information.

1.2 SECTION INCLUDES

A. Master Clocks, Secondary Clocks and accessory components.

1.3 QUALITY ASSURANCE

A. NFPA 70 – National Electrical Code

B. Underwriter's Laboratory

C. TIA/EIA-607 Telecommunications Grounding

D. *Eleventh* edition (or latest) BICSI Telecommunications Distribution Methods Manual (TDMM)

1.4 SYSTEM WARRANTY

A. The Clock System shall be warranted by the Contractor for a period of ***three (3)*** years from date of substantial completion.

1.5 RELATED SECTIONS

A. Specification Section 275123 - Central Sound and Paging System

1.6 GENERAL

A. Synchronized with the United States Atomic Clock via GPS receiver with external antenna, NTP Internet connection, or CDMA.

B. Self-correcting for Daylight Savings Time changes.

C. Analog Secondary Clocks:
1. 12" diameter minimum, surface-mounted.
2. Metal hour, minute, and second hands with impact resistant molded plastic case.

See additional resources for updates

3. Corridors: Double-faced, securely mounted perpendicular to wall or ceiling mounted.
4. Gymnasiums: 15” diameter minimum. Provide wire guards in gymnasiums, auxiliary gymnasiums, and locker rooms.

D. Digital Secondary Clocks:
1. 2.3” height minimum, 4-digit, 7-segment LED display with metal case.
2. Corridors: Double-faced with perpendicular wall or ceiling mount.
3. Gymnasiums: 4” height minimum, 4-digit, 7-segment LED display with metal case. Provide wire guards in gymnasiums, auxiliary gymnasiums, and locker rooms.
4. Optional Text Messaging capability.

E. Master Clock with software-programmable, integral building bell schedule and audible tone generator with selectable tones to provide class change tones to input of Central Sound System.
1. Minimum of four (4) selectable, pre-programmed class change schedules, easily selectable from the main school office.
2. Manual activation of audible tone from the main school office.
3. Permanent or periodic temporary RS-232 connection to PC for data download update of class change schedules.
4. NOTE: Where Central Sound Systems with built-in tone generator and programmable bell schedule function are utilized, the Master Clock need only to be able to synchronize time with the Central Sound System headend processor.

1.7 WIRELESS CLOCK SYSTEMS

A. Battery-operated - minimum 5-year battery life

B. Provide RF transmitters and antennas, as required to provide complete building-wide coverage.

1.8 WIRED CLOCK SYSTEMS

A. Low-voltage power – 24V or less

B. Central or distributed power supplies as required

C. Optional IEEE 802.3af, Power Over Ethernet (POE) connectivity

1.9 INSTALLATION

A. Securely mount the clocks flush on the walls in classrooms and office areas.

B. Connect tone generator output to input of Central Sound System if function is not provided by that system.

C. Synchronize time with the Central Sound System master clock if the tone generation and program schedule functions are provided by that system.

D. Program initial bell schedules as provided by the Owner.

See additional resources for updates

E. Located schedule selection and manual bell activation functions in main school office.

1.10 TRAINING

A. Provide four (4) hours training for School/District personnel on the operation, programming, and maintenance of the system.

B. Provide ***a digital video*** copy of all training.

END OF SECTION

See additional resources for updates

28 DIVISION

ELECTRONIC SAFETY AND SECURITY

See additional resources for updates

TABLE OF CONTENTS

DIVISION 28: ELECTRONIC SAFETY AND SECURITY

281300 ***Access Control System***
281600 ***Intrusion Detection System***
282300 ***Video Surveillance System***
282600 ***Area of Refuge Intercommunication System***
283111 Digital, Addressable Fire-Alarm System

See additional resources for updates

SECTION 281300

ACCESS CONTROL SYSTEM

GENERAL GUIDELINES

1.1 GENERAL

A. This Section defines the general design requirements for a uniform Access Control System that shall be followed for all OSFC Technology construction projects.
B. Refer to Sections 8500, Technology Systems, 28 16 00 Intrusion Detection System, and 28 23 00 Video Surveillance System for additional information.

1.2 SECTION INCLUDES

A. Integrated Security Management (ISM) System
B. Uninterruptible Power Supply (UPS).

1.3 QUALITY ASSURANCE

A. National Fire Protection Association.
B. NFPA 730 – Guide for Premises Security
C. NFPA 731 – Standard for the Installation of Electronic Premises Security Systems
D. National Electric Code.
E. American with Disabilities Act.
F. Underwriter's Laboratory.
G. Latest ANSI TIA/EIA-568, 569, 606, 607 Standards and Eleventh Edition (or later).
H. BICSI Telecommunications Distribution Methods Manual (TDMM).

1.4 SYSTEM WARRANTY

A. ***The Access Control System and software shall be fully warranted for three (3) years from date of substantial completion by the contractor and manufacturer. If any defects are found within this warranty period, the defective system component shall be replaced at no extra cost to the Owner for parts or labor. Provide a statement of this warranty with the O&M manuals and to the Director of IT. Make available a service contract offering continuing factory authorized service of this system after the initial warranty period***.

1.5 GENERAL

A. Furnish a new Integrated Security Management (ISM) system that provides a simple and easy-to-use graphical user interface.

B. The system shall provide local ***and remote*** operational control of all access points and alarm sensors.

C. The ISM System client and server software shall be used in conjunction with intelligent controllers to provide a distributed access control and alarms monitoring system.

D. In the event of a communications failure between the host server and the remote controllers, the controllers shall continue to make local access control decisions and save all transactions in memory until communications are restored. At that time the controller shall upload all stored transactions to the Central Server.

E. When a District has more than one building, the Central Server shall be located in one of the District's buildings and the other buildings shall be attached to the Central Server via the Wide Area Network. All buildings in the District shall interface to the Central Server and Control Consoles.

F. The ISM System shall seamlessly integrate the functions of Access Control, Alarm Monitoring and Response, Digital Video Imaging and Badge Design/Creation, and Visitor Management.

G. Access Readers supporting various technologies shall provide data from proximity card presentations via a door control unit that includes the electrical interface to the reader as well as inputs for door sensors and relays for outputs.

1.6 HARDWARE FEATURES

A. MODULAR SYSTEM DESIGN

1. Device Control Modules shall be located in the Telecommunications Rooms (TRs) and connected to the Building Controller via hardwired bus connections or via an Ethernet TCP/IP Network.

2. The Building Controller shall be located in the Main Equipment Room (ER) and connected to the Central Server via an Ethernet TCP/IP connection over the District's Wide Area Network (WAN). All WAN communication shall be AES encrypted.

3. ***Individual IP-based door control modules may be field located at the door.***

B. ELEVATOR CONTROL, AS APPLICABLE

1. The system shall have the ability to provide elevator access control by (1) using a card reader to activate the elevator call button, (2) using a card reader in the cab to activate the correct floor selection button, or (3) a combination of both of these functions.

2. Each cardholder shall then have floor permissions assigned as part of the normal access rights. The system shall provide outputs to the elevator controls to verify which floors are authorized for each cardholder. The system shall be capable of tracking which floor was enabled/selected by that person

C. AVAILABILITY AND DISASTER RECOVERY

1. The system shall automatically synchronize any distributed databases.

2. The system shall be capable of having a redundant or clustered Central Server.

4. In the event of loss of communications with the Central Server, the Building Control Units shall revert to a survivable remote operation and continue operation until communications is restored.

1.7 SOFTWARE FEATURES

A. PERMISSIONS

1. The system shall support multiple Operator permission levels.

B. VIDEO IMAGING AND ID BADGE PRINTING

1. The system shall incorporate video imaging as a fully integrated function to customize access control cards by printing an identity badge directly onto the card.

2. The badge design and image capture capabilities shall combine with the latest technology card printers to allow the production of an ID badge pass for each cardholder at the time of registration.

3. For each cardholder both a facial image and a signature shall be able to be captured, or imported, and stored as part of the card record.

5. A comprehensive integrated badge design and printing facility shall also be provided, allowing an unrestricted number of custom badge layouts to be defined then saved with a suitable description as a reference.

6. When creating a new card record a badge preview screen shall also be included that displays the specific card's details on the selected badge design to allow confirmation prior to requesting the badge to be printed.

7. Each new cardholder record shall have the option to be flagged for future printing. Cards flagged in this manner shall be easily recalled at a later stage and processed for output to the printer in a single action.

8. The ISM System shall support any manufacturer's ID badge printer with a ***current*** Microsoft ***platform*** (depending on the workstation configuration) compatible printer driver.

9. Provide one (1) Video Camera and Badging system per District.

C. VIDEO VERIFICATION

1. Depending on the District's needs, a Video Imaging option shall be available to provide a monitoring screen that will automatically display the stored image for a card when used at a reader.
2. This screen shall operate in conjunction with a live video input from a CCTV camera viewing the selected access point, allowing the operator to verify that each card offered is in fact being used by the person to whom it was issued.

3. ***Optional -*** This screen shall also be frozen and printed to provide a hard copy evidence of any abuse observed by the operator. For District's with high security access points, the system shall be configured to <u>not grant</u> access until the operator has verified the stored and live images are the same person, with the door release being controlled by the system operator.

D. REPORT GENERATION

1. Extensive history reporting shall be a standard integrated feature and shall include the ability to review all system alarms, access control activity, and operator actions. These reports shall be made available for review via the operator's display screen, a printer, or to another disk media. Extensive sort parameters shall include by any of the "Personal Details" fields or Titles, for example, by "Department", and only Names commencing with "Sm*".

2. The system shall also support generation of reports detailing the system operation such as:

   a. Cards on site.

   b. Hours on site.

   c. Cardholders with access to each door.

   d. Access rights of each cardholder.

   e. System Configuration.

   f. Scheduled and Conditional Commands defined.

   g. System operator transaction history.

3. It shall be possible to replay video clips associated with events by directly interacting with the report as published to the computer screen.

E. ADDITION OF CARDHOLDERS TO THE SYSTEM DATABASE

1. The system shall provide a means of assigning access control rights to each cardholder. Access control rights determine which access points are accessible to the cardholder based on date and time of day.

2. The software shall also provide an ALTERNATE set of Access rights to a cardholder on a temporary basis. The change may be initiated at any time by an authorized operator, or automatically between specified dates. This shall provide the ability of automatically changing a card's rights between a specified date range, after which the card will revert to its normal Doors and Times. Alternate access rights shall be able to be configured for multiple date ranges.

3. Each cardholder shall either be associated with standard door timings, for door release, door open and door pre-held or be given extended timings for disabled persons or someone who has to push a cart.

4. The system shall permit individual Access Rights or Group Access Rights to be assigned.

F. CARDHOLDER DETAILS

1. Cardholder information shall include first and last name, card number, PIN code and valid period to provide automatic expiration. Each cardholder record shall also incorporate at least 50 user-defined personal data fields, independent of user-defined fields for visitor management.

2. Data base synchronization utilities shall be provided to synchronize the Access Control Database with the District's HR database. Removing an individual from the District's HR database shall automatically be queued for removal from the Access Control Database.

G. LOCATOR

1. This feature shall provide a quick method of locating cardholders by displaying the last 10-25 valid history events along with the time, date and access point used. This information shall be available for an individual or group of persons by name, card number or by personal data.

H. CARD WATCH FEATURE

1. It shall be possible to easily track any individual as they move around a large site by selecting a card watch. As the person uses their access control card, the system shall have the ability to automatically notify the operator of the person's presence at each location.

I. MASTER CARD MODE

1. Master card mode authority shall be assigned to special cardholders, such as building maintenance, principals, etc. These features should be enabled on a per reader basis. This shall allow a person when vacating an area or building to change the reader's mode of operation from normal access control to Master Card Out operation.

2. When in this condition only persons with Master card privileges shall gain access through the door, all non-Master card users are rejected regardless of their card's current access rights.

3. This special feature shall be activated/deactivated by the Master cardholder, using a card presentation followed by a special code entered via the reader's keypad.

J. AUTOMATIC HOLIDAY OVERRIDE

1. The software shall be able to be programmed by the operator to recognize special or holiday dates, which in turn can be linked to operational changes in how the site is to be managed on these specific days.

2. This feature shall notify a system operator of individual holiday dates up to seven days prior ***to provide*** a useful check on the date's current validity.

3. Multiple types of holiday dates shall also be provided so that partial school days or early closing requirements on specific dates can be accommodated.

K. ALARM MANAGEMENT

1. The system shall provide flexible alarm management.

2. The system shall support the ability to selectively choose alarms to acknowledge and/or clear.

3. Each alarm shall be capable of linking video from the CCTV digital video recorders for incident playback – fully integrated system.

4. An alarm monitor display shall support the display of alarm statistics.

5. Alarms shall be capable of being routed to specific client machines by time of day or day of week.

6. Unacknowledged alarms shall be capable of being routed to alternate client or Email address based on age and priority of alarm.

7. The display of reader door alarms shall be automatically enabled or disabled by the use of timed commands, either by reader or by a group of readers.

L. GRAPHICAL SITE MAPS

1. To further enhance the presentation to the operator, the system shall have the ability to import and use graphical maps. Individual building Maps shall be linked together using a tiered tree structure. To speed the location of an incident, each map level shall contain a clearly visible indicator as to which sub map the operator should select next to find the device that is in alarm.

2. The status of readers, doors, monitor points and auxiliary outputs shall be requested from any map by simply selecting the icon representing the device and its current state will be displayed.

3. Maps shall be created using standard office tools such as Paint® or drawing packages such as AutoCAD®. It shall be possible to import drawings in the following formats: JPEG, Bitmap, Windows metafile or DXF. The maps shall be prepared by the Contractor for the District.

4. Icons representing access points, monitoring points, switching outputs, alarm inputs, CCTV cameras or intercom call stations shall be placed on any map at the required location in a drag and drop manner.

5. It shall be possible to define on the map the location of readers, access doors, alarm-monitored points, output switching relays, CCTV cameras, Digital Video Recorder Cameras, Intercom call stations and alarm panel devices.

6. The map display shall allow the operator to switch the video display of any defined CCTV camera to any defined CCTV monitor. The map display shall allow the display of stored and live Digital Video Clips – fully integrated system.

7. The map display shall include the option to group and display similar devices as a single icon. Once devices are grouped it shall be possible to change their status. For example, it shall be possible to unlock/lock all Building or District entrance doors by executing a single command from the map display.

M. MANUAL AND AUTOMATIC COMMANDS

1. The system shall provide for both manual and automated commands. For example it shall be possible to schedule a command to automatically lock/unlock all doors at a specified time.

N. USER CODE MODE

1. The System shall support the ability to put a keypad-equipped reader into User Code Mode. This feature shall allow a cardholder to gain access by entering a valid card's number at a reader keypad, therefore not requiring the holder to carry a card.

2. User code mode shall be enabled on a per reader basis.

O. VISITOR MANAGEMENT **-** OPTIONAL

1. Visitor Management shall be incorporated as an optional feature of software, as coordinated with the School District's requirements. Operators shall be able to pre-enroll visitors. Any operator with visitor permissions assigned ***has*** the ability to pre-enroll visitors.

2. Visitor time of arrival and time of departure shall be tracked by the system. This feature shall be available even if a visitor is not issued a card or card number in the system.

3. The System shall support an optional driver's license scanner including optical character recognition to ease data entry.

4. The System shall support capture of a business card image.

5. The system shall include the ability to monitor the occupancy of an area.

P. WINDOWS DAYLIGHT SAVING AUTO ADJUSTMENT

1. The system shall support automatic Daylight Savings Time Adjustment.

Q. HISTORY ARCHIVE AND SYSTEM BACK UP

1. The system shall allow on line archiving of history logs, along with database back up of system configuration and cardholder details. This function shall be able to be automated to occur without intervention at a pre-set time.

R. SMART CARD ENCODING

1. The system shall provide the ability to encode contactless smart cards with access control information.

2. On a timed or manual basis the system shall be configurable to allow entry using the smart card only, thereby raising or lowering the level of security as required.

S. DIGITAL VIDEO MONITORING AND CCTV MATRIX SWITCH CONTROL OPTION

1. For larger Districts, the system shall provide an option to interface to a CCTV matrix switcher. This component shall allow an operator with appropriate privileges to display any available video source on any available video monitor.

T. DATA IMPORT/EXPORT

1. The system shall support a data import/export ability to permit the District to bulk-load employee information at the beginning of a school year.

U. BUILDING CONTROL MODULE

1. The system shall provide a Building Control Module, to allow the definition of one or more building controls, each used to control a separate HVAC or other building system. Readers and/or motion detector inputs shall be able to be used to determine the occupancy of the area represented by the building control – a fully integrated solution.

2. The Building Control Module shall support standard BACnet communications to project the current status of building controls, monitor points, doors and the last alarm generated to third-party building systems.

3. The system shall allow manual commands to interface with (turn on or off) building controls through the BACnet protocol. It shall be possible to issue these commands from on-screen graphical maps or plans of the building.

4. The system shall allow scheduled commands to interface with (turn on or off) building controls through the BACnet protocol. It shall be possible to issue these commands automatically at any time of the day, any day of the week or holiday dates.

5. The system shall allow conditional commands to interface with (turn on or off) building controls through the BACnet protocol. It shall be possible to issue these commands automatically depending on another event occurring. For example, a cardholder could use a "card command" at an access control reader to switch an HVAC system on or off.

6. It shall be possible to view the current status of a building control from the View/Status screen in the System software.

7. The system shall allow the definition of groups of building controls, which enables, for example, a single command to switch on several building controls in one operation.

V. E-MAIL ALARMS

1. The System shall support the ability to automatically e-mail alarm condition messages.

W. INTERCOM INTEGRATION OPTION

1. The system shall support a serial or other high-level connection to an intercom system. The intercom system shall be accessed by users through a call station -- typically installed outside the building at doors, parking barriers, etc.

2. Visitors or other personnel generally ask permission to gain entry at the intercom call stations.

X. INTRUSION DETECTION SYSTEM INTEGRATION

1. The System shall support a high-level (serial interface) to an intrusion detection system (IDS). The IDS shall be UL 1076 listed. The System shall support events to be recorded and displayed from the IDS system on the alarm management screen and in the transaction history reports – fully integrated system.

1.8 CARD READERS

A. Furnish Card Readers at all Controlled Access Entrances, Elevators, Food Storage areas and Technology Rooms, as required by the District.

B. All Card Readers shall be Proximity Type (no Card swipe type readers) as required by the District.

C. Card readers ***may*** include a keypad for duress entry or PIN Number entry.

1.9 POWER SUPPLIES

A. All system Power supplies shall be centrally located in the Technology Rooms and connected to the Technology Room Generator Powered, UPS units.

1.10 INSTALLATION

A. The Administrator Terminal shall be connected to the remote terminals before connecting to any card reader processors.

B. The Contractor shall coordinate with the District's locksmith if converting from mechanical to electric locks.

C. The Contractor shall install the appropriate cable from the CPU to readers, door contacts, request-to-exit devices, and electric locks at each door and/or gate.

D. All communications cables shall be kept away from power circuits.

E. The Contractor shall install the power supply(s) for electric locks in locations where they will not interfere with other operations.

F. The Contractor shall do nothing to modify a UL. rated door or frame that would void the UL label or fire rating.

G. All cables shall be labeled with self-laminating, machine-printed, wrap-around labels.

H. Review and coordinate door hardware characteristics and integration requirements with the Design Professional.

1.11 INITIAL PROGRAMMING AND CONFIGURATION

A. Contractor shall provide initial programming and configuration of the Integrated Security Management (ISM). Programming shall include defining hardware, doors, monitor points, clearance codes, time codes, door groups, alarm groups, operating sequences, camera call-ups, and the like. Input of all program data shall be by Contractor. Contractor shall consult with Security Consultant and District to determine operating parameters.

B. The Contractor shall develop and input system graphics, such as maps and standby screens. The District shall provide floor plan ***record ("as-built")*** drawings as the basis for the creation of maps. Development of maps shall include the creation of icons for all doors, monitor points, and tamper circuits. Owner shall provide floor plan ***record ("as-built")*** drawings, in the form of AutoCAD .DWG or .DXF files, as the basis for the creation of maps.

C. The District, with the cooperation and assistance of Contractor, will input the cardholder data for each access card.

D. The system shall be configured with a minimum of 1 user license per building.

1.12 TRAINING

A. Provide a minimum of forty (40) hours of training to the District's personnel. Plan for multiple training trips to the site. Training session(s) shall cover the following topics at a minimum:

1. System Equipment Connectivity

2. Device Configurations

3. Operation, maintenance, and upgrade procedures.

B. Training to be arranged with District personnel. 40 hours should be spread out over the length of the warranty (Ex: 8 hours at project turnover/completion, 8 hours at 3 months, 8 hours at 6 months, 8 hours at 1 year, 4 hours at 2 years, 4 hours at 3year.)

C. Training to occur in maximum of 2 hour increments per personnel or groups or personnel.

D. Consider requiring Contractor to provide manufacturer training vouchers for a portion of the training, which are valid during the warranty period.

E. Training shall be by certified manufacturer instructor.

F. Training schedule shall be coordinated with District personnel and their needs.

G. Training plan, time line, and agenda shall be provided to District IT personnel and signed off by District and Contractor.

H. Warranty certificate and agreement shall be provided to District IT personnel at initial training session.

I. Provide a digital video copy of the training sessions.

1.13 SEQUENCING

A. The following figures provide recommendations for the sequencing and operation of the Access Control for the building's main doors. Suggested breakdown of tasks by trade are also provided. The Designer should consult with the District to determine final operating parameters.

(please see following diagrams)

See additional resources for updates

DOOR OPERATING SEQUENCE DIAGRAM

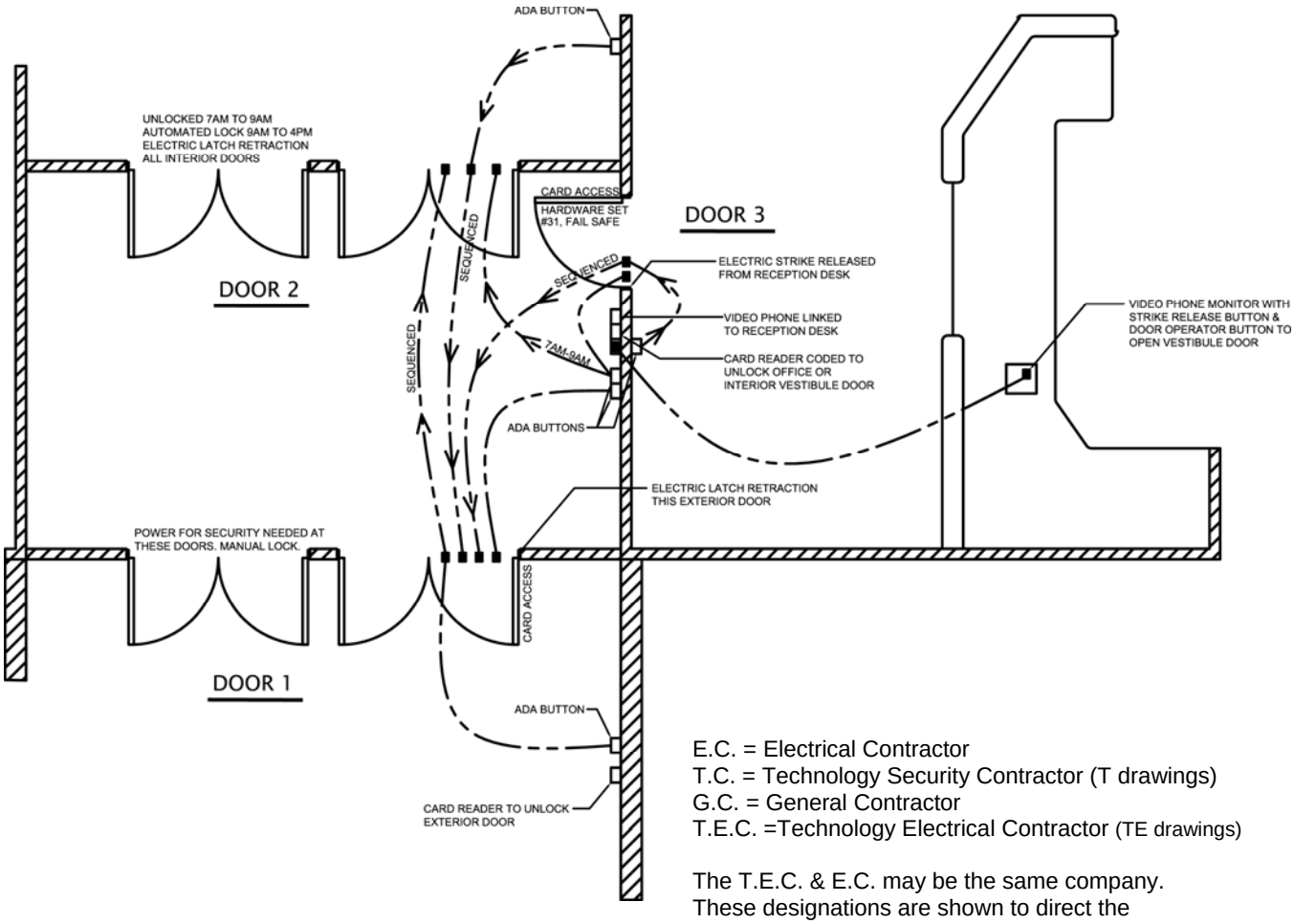

E.C. = Electrical Contractor
T.C. = Technology Security Contractor (T drawings)
G.C. = General Contractor
T.E.C. =Technology Electrical Contractor (TE drawings)

The T.E.C. & E.C. may be the same company. These designations are shown to direct the contractor(s) to the appropriate support documents.

NOTES:

1. Pathway by T.E.C; wire and termination by E.C.
2. Pathway, wire, and termination by T.E.C.
3. All by E.C.
4. Pathway by T.E.C.; wire and termination by T.C.
5. Card reader coded to unlock vestibule to office door 3.
   Pathway by T.E.C.; device, wire, and termination by T.C.
6. Device furnished and installed by T.C.
7. Device furnished and installed by G.C.
8. Device furnished and installed by G.C.; access interface by T.C.
9. Pathway by T.E.C.; device, wire, and terminaton by T.C.
10. Device furnished and installed by G.C.; access interface by T.C.
11. Video phone monitor with strike release button to open vestibule door 3.
12. Video phone linked to reception desk. Pathway by T.E.C.; device, wire, and termination by T.C.
13. Doors on the operating diagram are a typical standard schematic only. The number of doors and size of openings vary per project. Consult with door sheets of the architectural, electrical, and technology drawings.
14. Door power supply tied to emergency generator.
15. See door elevation diagrams for contractor responsibilities.

See additional resources for updates

TYPICAL DOOR 1

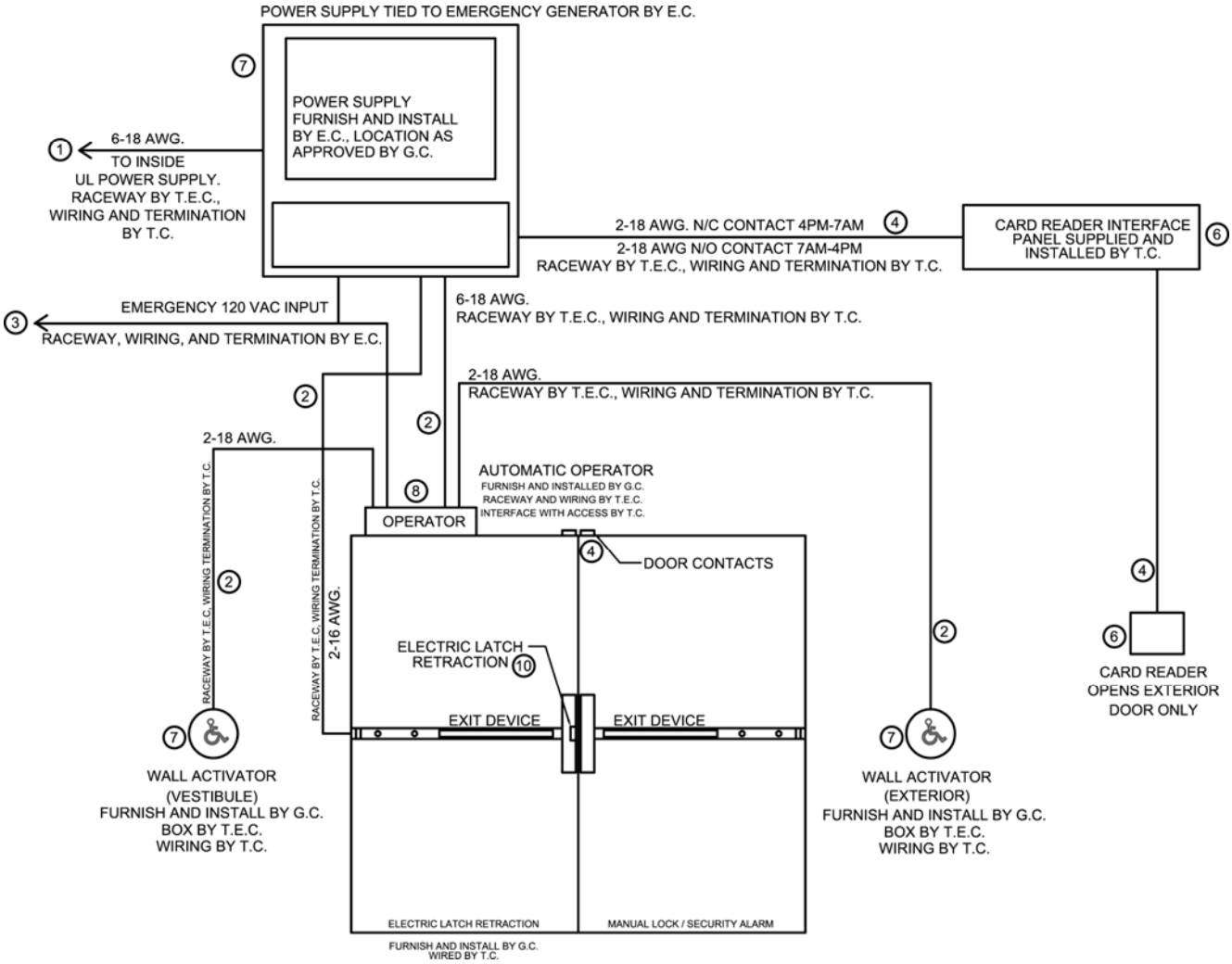

Door 1:

Push plates needed for assisted access to and from vestibule 7 a.m. – 4 p.m.

Card reader access to unlock door 4 p.m.-1 a.m. weekdays and weekends.

Only one door has power for card reader and push plates. All others need security power.

All other doors are manually locked 4 p.m.-7 a.m. They will open from inside vestibule via panic devices.

All exterior doors have security breach alarm hardware.

All components should be installed in one location as designated by G.C., 8" above ceiling (typical).

See additional resources for updates

TYPICAL DOOR 2

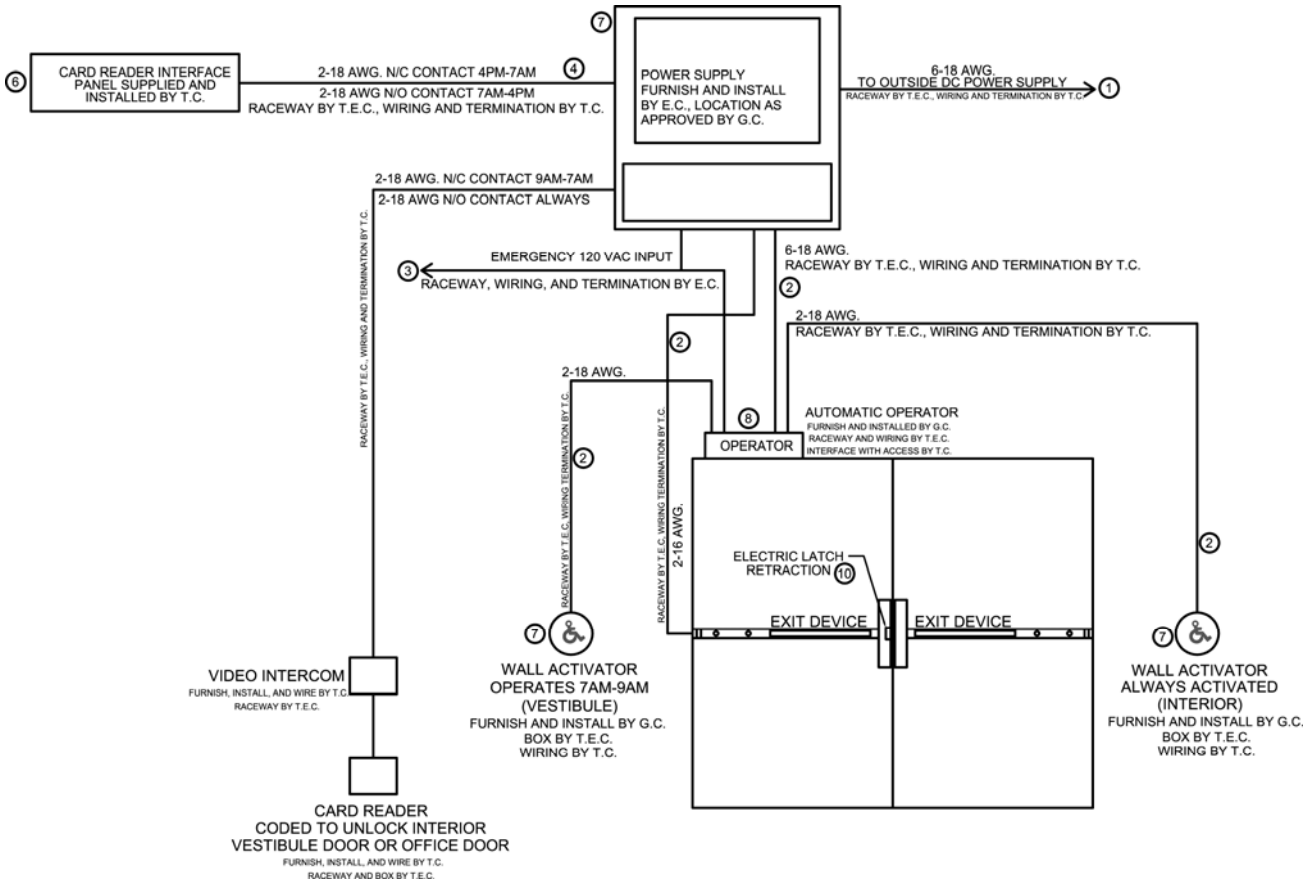

Door 2:

This door will be unlocked between 7 a.m.-9 a.m. and both push plates will work.

After 9 a.m. the door will be locked and the vestibule push plate will not work but the interior push plate will still unlock the panic bar and open the door.

There will need to be one set of contacts to the inside door to control the locking and unlocking of the panic bar between 7 a.m.-9 a.m.

This door can be opened by card reader at all times.

All interior vestibule doors have electric latch retraction and are connected to building security.

All interior vestibule doors lock from 9 a.m.-4 p.m.

All interior doors can be opened from inside the building at all hours via panic hardware.

Lock out of doors can be overridden during fire drills or other events.

All components shall be installed in one location as designated by G.C., 8” above ceiling (typical).

See additional resources for updates

TYPICAL DOOR 3

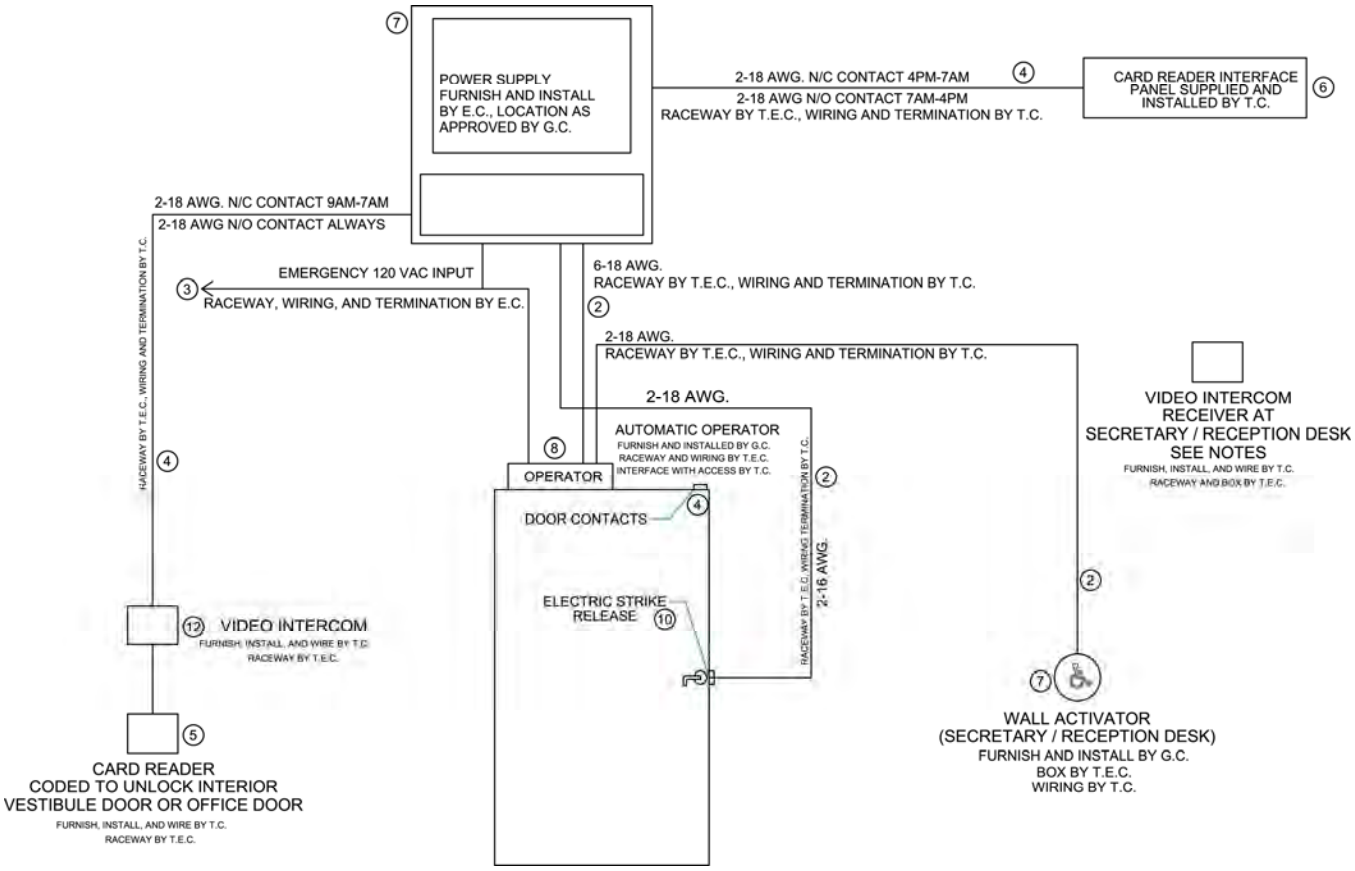

Door 3:

This door is locked at all times.

Entry is only allowed via card reader or by push plate located at the office personnel's desk.

Visitors must first be identified at the video intercom located in the vestibule by the office personnel through their video receiver.

There is a push plate inside the office to let visitors out when they are leaving.

There are no push plates inside the vestibule to let people into the office.

All visitors must be identified prior to gaining access to the rest of the building.

The security/receptionist has control over releasing the door strike to unlock the door or releasing the strike and activating automatic door operator, depending on which button is pressed on the intercom receiver.

All components should be installed in one location as designated by G.C., 8" above ceiling (typical).

END OF SECTION

See additional resources for updates

THIS PAGE HAS BEEN INTENTIONALLY LEFT BLANK.

SECTION 281600

INTRUSION DETECTION SYSTEM

GENERAL GUIDELINES

1.1 GENERAL

A. This Section defines the general design requirements for a uniform Intrusion Detection System that shall be followed for all OSFC Technology construction projects.

B. Refer to Sections 8500, Technology Systems, 28 13 00 Access Control ***System*** and 28 23 00 Video Surveillance ***System*** for additional information.

1.2 SECTION INCLUDES

A. Intrusion Detection System.

B. Uninterruptible Power Supply (UPS).

1.3 QUALITY ASSURANCE

A. National Fire Protection Association.

B. NFPA 730 – Guide for Premises Security

C. NFPA 731 – Standard for the Installation of Electronic Premises Security Systems

D. National Electric Code.

E. American with Disabilities Act.

F. Underwriter's Laboratory.

G. Latest ANSI TIA/EIA-568, 569, 606, 607 Standards and Eleventh Edition (or later).

H. BICSI Telecommunications Distribution Methods Manual (TDMM).

I. UL 1610 -- Central-Station Burglar-Alarm Units.

J. UL 1023 -- Standard for Safety Household Burglar-Alarm System Units.

K. UL 609 -- Standard for Safety Local Burglar Alarm Units and Systems.

L. UL 365 -- Standard for Safety Police Station Connected Burglar Alarm Units and Systems.

M. UL 985 -- Household Fire Warning System Units.

N. Products -- Factory Mutual approved.

1.4 SYSTEM WARRANTY

A. The Intrusion Detection System and software shall be fully warranted for three (3) years from date of substantial completion by the contractor and manufacturer. If any defects are found within this warranty period, the defective system component shall be replaced at no extra cost to the Owner for parts or labor. Provide a statement of this warranty with the O&M manuals and to the Director of IT. Make available a service contract offering continuing factory authorized service of this system after the initial warranty period.

1.5 SYSTEM OPERATION

A. Upon entering a valid access code via a system control keypad, the system shall disarm the applicable zones, disarm the alarm system, and log the transaction pertaining to time, date, and user.

B. The Intrusion Detection System shall provide the following functions:

1. A system control panel, control keypads, magnetic door contacts, motion sensors, and alert sirens.

2. Provide interconnection to the District provided dedicated telephone connection for monitored response to after-hours alarms. Consider cellular backup system.

3. Provide interconnection to the central control panel for monitoring all applicable doors with door contacts.

4. System shall be fully integrated with the building's Access Control and CCTV System.

5. The System shall be integrated with the building lighting system and shall activate the corridor lights and other selected areas in the event of alarm activation.

6. The System shall be supervised, i.e. power failure, line cuts and communication failures shall signal the monitoring station(s) of the problem.

7. The fire system flow and tamper points shall be attached to the system.

8. The System shall provide monthly reports, detailing as a minimum:

a. Alarm System usage.

b. Door Openings.

c. Door Closings.

d. Alarm Conditions.

C. The System shall be programmed to accept individual access codes from authorized employees. Codes shall not be shared.

1.6 EXTERIOR ENTRANCE / EXIT DOOR

A. KEYPAD

1. A keypad shall be mounted within six (6) feet of the entrance on the inside of the facility.

2. The keypad shall utilize a minimum of a two (2) line, 32-character LCD display and an integral multi-tone speaker.

3. The keypad shall contain an internal diagnostics program allowing for system troubleshooting without disabling the system.

4. The keypad shall allow for the use of three dedicated keys to function as panic keys.

5. Keypads shall have a keypad activated duress code feature.

6. All keypads shall be interfaced with the Control Panel.

B. DOOR CONTACT

1. A magnetic door contact switch shall be installed at each exterior door to provide door open/closed status to the system.

2. The contact switch shall be installed recessed into the doorframe where applicable.

C. CENTRAL CONTROL PANEL

1. Provide one Central Control Panel, which shall be equipped with a lock and transparent door panel.

2. The Central Control Panel shall provide the required input zones, operate on 24V D.C., indicate ground fault, and activate audio and visual devices.

3. The Central Control Panel shall have a battery charging system and battery(s).

4. Connect the Central Control Panel to the Main Equipment Room**,** generator powered, UPS Units.

5. Provide necessary auxiliary contacts (alarm and trouble), for sending signals to the digital communication system.

6. Provide necessary auxiliary contacts to power the exterior bell.

7. The Central Control Panel shall provide a telephone digital communication actuation and supervisory circuit.

8. Connect Central Control Panel to the District provided telephone line(s).

D. P.I.R. MOTION SENSOR ***- Optional***

1. The Technology Designer shall verify requirements of motion sensors with the school district.

2. The system ***type*** shall be passive infrared motion detectors.

3. The sensors shall be microprocessor controlled and contain a false alarm protection feature.

4. The sensors shall provide a minimal coverage pattern of 50 feet by 50 feet to 120 feet by 12 feet based on interchangeable lenses. Select lenses based on coverage area required.

5. Short, medium and long-range motion detectors shall be selected as required to suit the area to be covered.

6. The sensors shall be capable of mounting either on a ceiling, wall surface or in a corner.

7. Consider sensor installations on all floors of the facility, in corridors and all rooms with outside access.

8. Consider each entry point backed up by Motion Detectors.

9. Consider motion detectors in computer labs.

10. Locate motion detectors to provide full coverage and minimize false alarms.

11. Provide single or dual technology motion detectors based on application.

12. Dual Technology sensors shall employ both Microwave and Passive Infrared.

E. ALARM SIREN

1. The system shall be provided with an external alarm siren(s) (horn) and strobe light as required.

2. The alarm sirens and strobes shall be housed in a tamper proof, weather resistant metal enclosures.

1.7 INSTALLATION

A. The system wiring and installation shall comply with all applicable codes and drawings, and shall be installed in accordance with the manufacturer's recommendations.

B. All wiring shall be color-coded and labeled at each end with self-laminating, machine-printed labels.

C. All wiring shall be installed in metallic raceways and shall comply with the latest edition of the National Electric Code (NEC).

1.8 MOUNTING HEIGHTS

A. All mounting heights shall comply with the Americans with Disability Act (ADA).

B. Mount Motion Detectors to provide maximum coverage, and minimal false alarms. Do not obstruct viewing angle.

1.9 TRAINING

A. Provide a minimum of four (4) hours training on the operation of the system.

B. Provide ***a digital video*** copy of all training.

END OF SECTION

See additional resources for updates

THIS PAGE HAS BEEN INTENTIONALLY LEFT BLANK.

See additional resources for updates

SECTION 282300

VIDEO SURVEILLANCE SYSTEM

GENERAL GUIDELINES

1.1 GENERAL

A. This Section defines the general design requirements for a uniform Video Surveillance System that shall be followed for all OSFC Technology construction projects.

1. Figure ***1*** describes a Typical District-Wide ALL IP CCTV System.

2. Refer to Sections 8500, Technology Systems, 28 13 00 Access Control ***System*** and 28 16 00 Intrusion Detection ***System*** for additional information.

1.2 SECTION INCLUDES

A. Integrated Video Surveillance System

B. Uninterruptible Power Supply (UPS).

1.3 QUALITY ASSURANCE

A. National Fire Protection Association.

B. NFPA 730 – Guide for Premises Security

C. NFPA 731 – Standard for the Installation of Electronic Premises Security Systems

D. National Electric Code.

E. American with Disabilities Act.

F. Underwriter's Laboratory.

G. FCC Class B.

H. NEMA Type 4AX.

I. NEMA Type 1.

J. NTSC/EIA.

K. ISO/IEC 14496-2 MPEG-4.

L. H.264.

M. Latest ANSI TIA/EIA-568, 569, 606, 607 Standards and Eleventh Edition (or later).

N. BICSI Telecommunications Distribution Methods Manual (TDMM).

1.4 SYSTEM WARRANTY

A. The Video Surveillance System and software shall be fully warranted for three (3) years from date of substantial completion by the contractor and manufacturer. If any defects are found within this warranty period, the defective system component shall be replaced at no extra cost to the Owner for parts or labor. Provide a statement of this warranty with the O&M manuals and to the Director of IT. Make available a service contract offering continuing factory authorized service of this system after the initial warranty period.

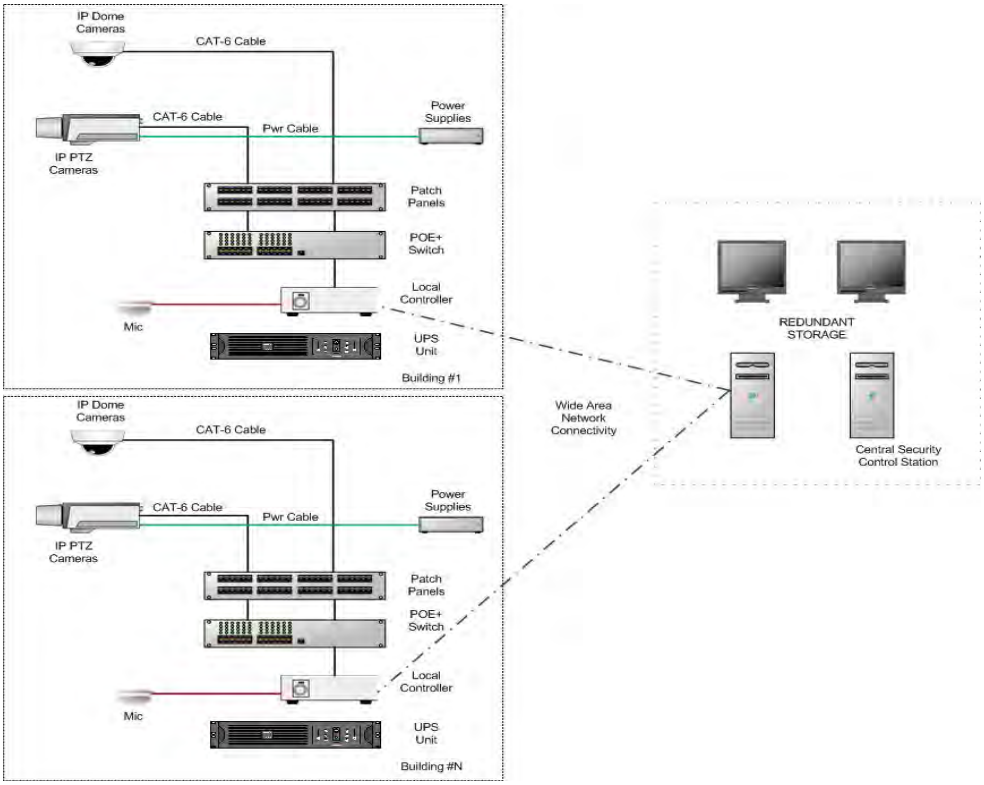

Figure ***1*** – Typical District-Wide ALL IP CCTV System

1.5 GENERAL

A. Furnish a new Integrated Video Surveillance System that provides a simple and easy-to-use graphical user interface.

B. The system shall provide local and central operational control and viewing of all cameras

C. Provide ALL IP System as shown in Figure 1 above.

D. All IP systems provide minimum ***2*** mega pixel technology that permits greater image resolution and detail, and enable advanced video analysis and recognition technologies.

E. ***All*** Designs shall use IP for new Cameras, POE+ Ethernet Switches and Local ***NVR*** units per building.

F. When a District has more than one building, the Video Management Server and Remote Viewing Station may be located in one of the District's buildings and the other buildings may be attached to the Central Server via the Wide Area Network. All buildings in the District shall have local recording NVR units and interface to the Central Server and Control Consoles and shall function as a single unified system.

G. The Video Surveillance System shall seamlessly integrate with the Access Control and Intrusion Detection Systems.

H. The Systems shall be located in the Main Equipment Room (ER) and connected to generator-powered UPS Units. Backup power shall be provided for both cameras and recording equipment.

I. Provide sufficient cameras to cover the entire school and surrounding lots.

J. As a minimum provide fixed focus camera coverage for:
1. All entrances/exit doors.
2. Hallways.
3. Restroom entrance/exit doors.
4. Loading docks.
5. Kitchen areas.
6. Lunch lines.
7. Cafeteria.
8. Auditoriums.
9. Playgrounds.
10. Bus pickup/delivery.
11. Parking lots.
12. Athletic Areas.

K. ***PTZ cameras, while optional, should be considered for the following areas:***
1. Outside building corners.
2. Parking lots.
3. Playgrounds.
4. Bus Drop-Off.
5. Building Services Areas.

L. Mount external cameras to the side of the building for most situations. Use pole mounting for special circumstances, as required.

M. Connect a minimum of one building mic to the CCTV Recording system. Locate the Mic in the Central Office area (typical). Connect the audio output from the building paging system to the CCTV recorder. Consider connecting the audio output from the PABX E911 calling system to the CCTV recorder.

N. Systems shall be monitored with an HDTV monitor in the Central Office area. Supply monitors based on system camera requirements. If required by the owner, post the appropriate signs advising the public that audio/video recording is taking place in the facility.

1.6 CAMERAS

A. ***Minimum HD resolution (1280 x 720), progressive scan***

B. All cameras shall be contained in smoked-dome, impact and vandal-resistant enclosures. Consider bulletproof enclosures for high crime areas.

C. Compatible lenses specific to each placement and required field of view will be used. In addition, MPIX cameras require specialized MPIX compatible lenses.

D. Typical ***interior*** lenses range from ***2.8-12mm; typical exterior lenses range from 5-50mm.***

E. Coordinate lens type with CCD sensor size.

F. Place multiple cameras in hallways and avoid single cameras covering a long hallway.

G. Limit camera spacing to 75 feet maximum.

H. Camera placement guidelines:

1. Avoid backlight (this problem can occur when attempting to capture an image from behind a window, etc.). Utilize wide dynamic range cameras in these applications.
2. Always use auto iris lenses for outdoor applications.
3. Avoid direct sunlight – try to position the camera the same direction as the sun.
4. Avoid viewing too much sky – it results in too much contrast.
5. Avoid reflections.

I. Cameras shall have integral motion detectors for changing the frame per second recording rate, depending on system set up.

J. Coordinate placement of all cameras with District and a Qualified Security Professional.

K. All cameras shall be equipped with an auto-iris, automatic gain control and automatic white balance.

L. All cameras shall be centrally powered from associated Telecommunication Room***,*** generator powered, UPS Unit.

M. All exterior PTZ cameras shall be contained in a pendant or recessed 180 degree style, vandal proof, exterior enclosure with integral heater module. Verify enclosure style with the Design Professional.

N. All PTZ cameras shall meet the following minimal features:

1. 22X Optical Zoom, 10X Digital Zoom.
2. Window Blanking.
3. 64 Presets.
4. 0.5° Preset Accuracy.

5. 140°/second Pan Speed.
   a) Rotating Discreet Liner.
   b) One Dynamic Window Blanking Area.
   c) Proportional Pan and Tilt.
   d) Programmable Zoom Speeds.
   e) 360 Degree scan.
   f) Day/Night Operation.
      1) 0.08 lux at ½ sec shutter (Color).
      2) 0.30 lux at 1/60 sec shutter (B/W).
      3) 0.013 lux at ½ sec shutter (B/W).
   g) 30 fps – NTSC.

O. Provide fiber-optic interfaces for all external, pole-mounted cameras.

P. All IP cameras shall meet the following minimal features:
1. Powered via 802.3af Power-Over Ethernet (POE+) using standard Category 6 cable.
2. Optional additional power for External PTZ cameras.
3. MPEG-4, MJPEG, and H.264 video compression. Minimum dual stream.
4. Audio capabilities with optional mic.
5. Optional DSP for video intelligence and recognition techniques.
6. Removable storage slot (Micro SD) with minimum 4GB memory.
7. Digital Pan/Zoom.
8. CCD sensor – 1/2-inch minimum.
9. Integrated PZT control over one Category-5e cable.
10. IR Cut Filter for low-light conditions.
11. SNMP support for management.
12. HTTPS for encrypted Communications.
    a) Built-in Web Server.
    b) Fixed IP address.
    c) 30 fps – at full resolution.

1.7 NETWORK VIDEO RECORDER (NVR)

A. New installations shall use Network Video Servers (NVS).

B. The NVR shall provide a high quality, recorder capable of storage and playback of images from all cameras at full resolution and frame rate. The NVR shall support new IP cameras with ONVIF compliance. ***NVR quantity and size guidelines are based upon bandwidth, not quantity of cameras.***

C. The NVR shall be able to record full-screen video images continuously, upon motion detection, or according to a time schedule to its internal hard drives.

D. The NVR shall have the capability to simultaneously record, archive background images, and allow multiple user network viewing and playback with no loss of performance.

E. Internal NVR hard drives shall provide for 30 days of storage at an average rate of 7.5 fps per camera, full HD resolution.

F. All recording to the hard drive shall have a digital signature applied to the disk file including time, date and camera info.

G. The ***NVR*** shall support simultaneous audio recording and playback on at least one channel in real time.

H. The ***NVR*** shall have video motion search to allow recorded searches on the hard disks, based on movement in a particular area of the image.

I. The ***NVR*** shall provide a list of the activity events that occurred within a defined area.

J. The ***NVR*** shall have a standard Ethernet connection and The Ethernet connection shall allow live and recorded viewing on a networked PC using a manufacturer's Network Viewer or via web pages over a standard Internet browser.

K. The ***NVR*** shall support file export of digitally signed images over the network.

L. The ***NVR*** shall provide a user-friendly, paged menu system that is controlled from the face of the ***NVR*** and viewable ***through a KVM switch. Each NVR shall be connected to a multi-port, IP enabled KVM with integrated flip up monitor/keyboard/mouse.***

M. The ***NVR*** central Viewing station shall be completely integrated with the Intrusion Detection and Access Control Systems.

1.8 REMOTE VIDEO SERVERS

A. Remote Video Servers shall have the following minimum features:

B. Store and Forward capability - Store data at the edge of the LAN/WAN and only forward over the network when required.

C. Event based recording for intrusion or access control activity.

D. Provide local storage of video streams in the event of WAN communication failure to the Central Storage Servers.

E. Complete control over frame rate, video resolution and other settings on a timed and trigger basis.

F. ***All current*** compression ***technologies.***

G. Integrated with Access Control and Intrusion Detection Systems.

H. PTZ support.

I. Motion detection support.

J. Integrated web server for configuration.

K. Video loss alarm capability.

1.10 IP VIDEO DECODERS

A. In all IP installations, any place where ***remote*** video is to be provided for local viewing, a multi-stream decoder (minimum 2x2 image per display) will be required.

B. A local PC, running the CCTV remote view software and connected to the local monitor, can also be utilized for this purpose.

1.11 INSTALLATION

A. The system wiring and installation shall comply with all applicable codes and drawings, and shall be installed in accordance with the manufacturer's recommendations.

B. All wiring shall be color-coded and labeled at each end with self-laminating, machine-printed labels.

C. All wiring and component installations shall comply with the latest edition of the National Electric Code (NEC).

1.12 TRAINING

A. Provide a minimum of forty (40) hours of training to the District's personnel. Plan for multiple training trips to the site. Training session(s) shall cover the following topics at a minimum:

1. System Equipment Connectivity

2. Device Configurations

3. Operation, maintenance, and upgrade procedures.

B. Training to be arranged with District personnel. 40 hours should be spread out over the length of the warranty (Ex: 8 hours at project turnover/completion, 8 hours at 3 months, 8 hours at 6 months, 8 hours at 1 year, 4 hours at 2 years, 4 hours at 3 year).

C. Training to occur in maximum of 2 hour increments per personnel or groups of personnel.

D. Consider requiring Contractor to provide manufacturer training vouchers for a portion of the training, which are valid during the warranty period.

E. Training shall be by certified manufacturer instructor.

F. Training schedule shall be coordinated with District personnel and their needs.

G. Training plan, time line, and agenda shall be provided to District IT personnel and signed off by District and Contractor.

H. Warranty certificate and agreement shall be provided to District IT personnel at initial training session.

I. Provide a digital video copy of the training sessions.

END OF SECTION

See additional resources for updates

THIS PAGE HAS BEEN INTENTIONALLY LEFT BLANK.

SECTION 282600

AREA OF REFUGE INTERCOMMUNICATION SYSTEM

1.1 General

A. This section defines the general design requirements for an ADAAG compliant Area of Refuge Assistance Intercommunications System that shall be followed for all OSFC Technology projects where applicable.

B. Coordinate requirements and device locations with the project architect.

1.2 Section Includes

A. Area of Refuge Intercommunication System

1.3 Quality Assurance

A. National Fire Protection Association

B. National Electric Code

C. American with Disabilities Act

D. Underwriter's Laboratory

E. Products – Factory Mutual approved

1.4 System Warranty

A. The Area of Refuge Intercommunication System shall be warranted by the contractor for a period of ***three (3) years*** from date of substantial completion.

1.5 System Operation

A. The Area of Refuge Intercommunication System is used to call for assistance from Areas of Refuge as defined in the Americans with Disabilities Act.

B. When a call is placed from a remote station, it is annunciated at the master station with both audible and visual signals and displayed on an alpha-numeric display. The alpha-numeric display shall indicate the name and location of the calling station. Once a call is acknowledged at the Master Station, the remote station provides visual and audible confirmation. The Master Console controls the direction of the talk circuit.

C. A call may only be canceled from the Master Console after it has been acknowledged. After the call has been canceled from the Master Console, the indicators extinguish and communication is terminated.

D. The Master Console may initiate audio communication with a Remote Call Station at any time by dialing the station number on its keypad or by pressing the button associated with the station. The Master Console may also page a group of Remote Call Stations to broadcast evacuation information. In the event of circuit trouble with any Remote Call Station, the Master Console will display the location and number of the station and "Trouble."

1.6 System Head-end

A. Provide a multi-station, ADAAG compliant Area of Refuge Assistance 2-way intercommunications system. System shall consist of a wall mounted master station and remote call in stations as indicated on the drawings. The System shall be micro-processor based and utilize multiplexing technology.

1.7 Call in Stations

A. The call in stations shall utilize common bus architecture with no home runs. Multiple stations and masters may be on one main.

B. The station has a flush mounting for standard electrical multi-gang wall box, weather/vandal resistant 11-gauge brushed stainless steel panel with tamperproof hardware, speaker/microphone for voice communication, a call button and two LED indicator. The panel resists damage from common cleaning agents. Supervision of the station is indicated at the Master Console.

1.8 Master Station

A. Ultra compact console with spill-proof keypad, backlit display panel, low-light readability, alpha-numeric display of station number and name, handset privacy or hands-free communication, auto-answer by lifting handset or scroll to any call, group voice page, digital volume keys, call tones with mute for calls in progress, programmable station name.

B. Master station may be either desk mounted or flush wall mounted with appropriate hardware.

1.9 Telephone Interface

A. Telephone Interface – the PBX telephone interface connects a call from a remote station to a PBX telephone system. The interface allows calls from remote stations to be forwarded to outside telephones. Interface is used in conjunction with the Master Station

1.10 Installation

A. The system wiring and installation shall comply with all applicable codes and drawings, and shall be installed in accordance with the manufacturer's recommendations.

B. All wiring shall be color coded and labeled at each end with self-laminating, machine printable labels.

C. All wiring shall be installed in metallic raceways from rough-in boxes to above accessible ceilings. Cabling installed open above accessible ceilings shall be supported with manufacturers and approved cable support systems and shall comply with the latest edition of the National Electric Code (N.E.C.).

D. All equipment shall follow manufacturer's guidelines for mounting heights and installation methods.

1.11 Testing

A. Verify proper operation of system

1.12 Training

A. Provide a minimum of ***four (4)*** hours training including system programming, trouble shooting and basic operation.

B. ***Provide a digital video copy of all training.***

END OF SECTION

SECTION 283111

DIGITAL, ADDRESSABLE FIRE-ALARM SYSTEM

GENERAL GUIDELINES

1.1 SECTION INCLUDES

A. Qualitative requirements for fire-alarm control unit, manual fire-alarm boxes, system smoke detectors, heat detectors, notification appliances, magnetic door holders, remote annunciator, addressable interface device, and digital alarm communicator transmitter.

1.2 QUALITY ASSURANCE

A. NFPA 70 - National Electrical Code

B. Underwriter's Laboratory

1.3 FIRE-ALARM CONTROL UNIT

A. Field-programmable, microprocessor-based, modular, power-limited design with electronic modules, complying with UL 864 and listed and labeled by an NRTL.

B. Addressable initation devices that communicate device identity and status.

C. Addressable control circuits for operation of mechanical equipment.

D. Alphanumeric Display and System Controls

E. Circuits:
1. Initiating device, notification appliance, and signaling line circuits: NFPA 72, Class B.

F. Elevator Recall:
1. Smoke detectors shall initiate automatic elevator recall.

G. Heat detectors in alarm installed in an elevator shaft and elevator machine room shall shut down elevators associated with the location without time delay.

H. Door hold-open devices that are controlled by smoke detectors at doors in smoke barrier walls shall be connected to fire-alarm system.

I. Automatically transmit alarm, supervisory, and trouble signals to a remote alarm station.

J. Primary Power: 24-V dc obtained from a 120-V emergency generator branch circuit and a power-supply module. Initiating devices, notification appliances, signaling lines, trouble signals, supervisory and digital alarm communicator transmitters shall be powered by 24-V dc source.

K. Secondary Power: 24-V dc supply system with batteries, automatic battery charger, and automatic transfer switch.
1. Batteries: Sealed lead calcium
2. Capacity: Comply with NFPA 72

See additional resources for updates

1.4 MANUAL FIRE-ALARM BOXES

A. Single-action mechanism, pull-lever type; with integral addressable module arranged to communicate manual-station status (normal, alarm, or trouble) to fire-alarm control unit.

1.5 SYSTEM SMOKE DETECTORS

A. General Requirements for System Smoke Detectors:
1. Comply with UL 268; operating at 24-V dc, nominal.
2. Detectors do not require resetting or readjustment after actuation to restore them to normal operation. Integral visual-indicating light: LED type indicating detector has operated and power-on status.

B. Photoelectric Smoke Detectors:
1. Detector address shall be accessible from fire-alarm control unit and shall be able to identify the detector's location within the system and its sensitivity setting.

C. Duct Smoke Detectors: Photoelectric type complying with UL 268A.
1. Detector address shall be accessible from fire-alarm control unit and shall be able identify the detector's location within the system and its sensitivity setting.

1.6 HEAT DETECTORS

A. Heat Detectors: Comply with UL 521.

B. Heat Detector, Combination Type: Actuated by either a fixed temperature of 135 degrees Fahrenheit or a rate of rise that exceeds 15 degrees Fahrenheit per minute unless otherwise indicated.

C. Heat Detector, Fixed-Temperature Type: Actuated by temperature that exceeds a fixed temperature of 190 degrees Fahrenheit.

1.7 NOTIFICATION APPLIANCES

A. Horns: Horns shall produce a sound-pressure level of 90 dBA, measured 10 feet from the horn, using the coded signal prescribed in UL 464 test protocol.

B. Visible Notification Appliances: Xenon strobe lights comply with UL 1971, with a clear polycarbonate lens.

C. Flashing shall be in a temporal pattern, synchronized with other units.

1.8 NOTIFICATION APPLIANCE CIRCUIT POWER SUPPLY UNITS

A. Power-limited design, complying with UL 864 and listed and labeled by an NRTL.

B. Primary Power: 24-V dc obtained from a 10-v emergency generator branch circuit and a power-supply module.

C. Secondary Power: 24-V dc supply system with batteries, automatic battery charger, and automatic transfer switch.
1. Batteries: Sealed lead calcium.
2. Capacity: Comply with NFPA 72

See additional resources for updates

1.9 MAGNETIC DOOR HOLDERS

A. Units equipped for wall mounting complete with matching doorplate.

B. Electromagnet: Requires no more than 3 W to develop 25-lbf holding force.

1.10 REMOTE ANNUNCIATOR

A. Annunciator functions shall match those of fire-alarm control unit for alarm, supervisory, and trouble indications. Manual switching functions shall match those of fire-alarm control unit, including acknowledging, silencing, resetting, and testing.

B. Alphanumeric display with LED indicating lights.

1.11 NON-ELECTRIC GRAPHIC ANNUNCIATOR

A. Framed plexiglass floor plan display with room numbers assigned by Owner.
   1. Color image printed on the reverse side of a polycarbonate Lexan laminated to a a rigid backing with a removable adhesive for future replacement.
   2. Graphics shall show location of fire-alarm control unit, “YOU ARE HERE”, detection devices and nomenclature.
   3. Mounting: Adjacent to remote annunciator.

1.12 ADDRESSABLE INTERFACE DEVICE

A. Microelectronic monitor module, NRTL listed for use in providing a system address for alarm-initiating devices for wired applications with normally open contacts.

B. Integral Relay: Capable of providing a direct signal to the following:
   1. Elevator controller to initiate elevator recall.
   2. Circuit-breaker shunt trip for power shutdown.
   3. Theatrical lighting controller for panic lighting.
   4. Heating, ventilating, and air-conditioning equipment controllers for power shutdown.
   5. Smoke dampers for closing.
   6. Magnetic door holders, electric locks, coiling doors and grilles for releasing.
   7. Building management system for equipment shutdown and alarm notification.

1.13 DIGITAL ALARM COMMUNICATOR TRANSMITTER

A. Digital alarm communicator transmitter shall be acceptable to the remote central station and shall comply with UL 632 and be listed and labeled by an NRTL.

1.14 DEVICE GUARDS

A. Welded wire mesh of size and shape for the manual station, smoke detector, gong, or other device requiring protection in gymnasiums and locker rooms.

1.15 EQUIPMENT INSTALLATION

A. Comply with NFPA 72 for installation of fire-alarm equipment.

See additional resources for updates

B. Remote Status and Alarm Indicators: Install near each smoke detector and each sprinkler water-flow switch and valve-tamper switch.

C. Mounting height of appliances shall comply with Americans with Disability Act.

D. Grounding: Ground fire-alarm control unit and associated circuits.

E. Wiring shall be installed in conduit in compliance with Allowable Conduit Schedule in section 260533.

END OF SECTION

See additional resources for updates

THIS PAGE HAS BEEN INTENTIONALLY LEFT BLANK.

31 DIVISION EARTHWORK

TABLE OF CONTENTS

DIVISION 31: EARTHWORK

311000 Site Clearing
312000 Earth Moving

SECTION 311000

SITE CLEARING

GENERAL GUIDELINES

1.1 SECTION INCLUDES

A. Qualitative requirements for removal of vegetation at the site, including stripping of sod and soil for site clearing.

1.2 SITE CLEARING

A. Clearing and grubbing obstructions, trees, shrubs, and other vegetation, including removal of stumps, roofs, and debris.

B. Provide temporary erosion- and sedimentation-control measures.

LEED SUGGESTIONS

2.1 As a prerequisite for LEED certification, an erosion- and sedimentation-control plan is required for the project. This plan must comply with the more stringent of either the “2003 EPA Construction General Permit” or local erosion- and sedimentation-control standards and codes. According to the EPA, the permit applies to construction sites greater than 1 acre except for smaller sites that are part of a larger common plan of development or sale. However, for LEED certification, the requirements are applied to all projects for this prerequisite.

END OF SECTION

SECTION 312000

EARTH MOVING

GENERAL ***GUIDELINES***

1.1 SECTION INCLUDES

A. Qualitative requirements for grading, excavation, embankments, and sedimentation and erosion control. Earth moving for foundations, structures, pavement, ditches, culverts, drains, and utilities.

1.2 MATERIALS

A. Satisfactory Soils: ASTM D 2487 soil classification groups ***and Geotechnical Engineer.***

B. Engineered Fill: Graded mixture of gravel, crushed stone, and sand with 90% passing a 1-1/2-inch sieve and not more than 12% passing a No. 200 sieve.

C. Subbase Material: Naturally or artificially graded mixture of natural or crushed gravel, crushed stone, and natural or crushed sand; ASTM D 2940; with at least 90 percent passing a 1-1/2-inch sieve and not more than 12 percent passing a No. 200 sieve.

D. Bedding Course: Naturally or artificially graded mixture of natural or crushed gravel, crushed stone, and natural or crushed sand; ASTM D 2940; except with 100 percent passing a 1-inch sieve and not more than 8 percent passing a No. 200 sieve.

1. Aggregates used for subsurface storage of storm water or for use with underdrains shall be washed limestone, washed gravel, or river rock. In all cases the aggregates shall be 100 percent crushed.

E. Topsoil: Shall be fertile, friable, natural loam, surface soil, reasonably free of subsoil, clay lumps, brush, weeds, and other litter or stones larger than 1/2 inch.

1. Provide 6 inches minimum topsoil.

F. Drainage Course: Narrowly graded mixture of washed crushed stone, or crushed or uncrushed gravel; AST D 448; coarse-aggregate grading size 57; with 100 percent passing a 1-1/2-inch sieve and 0 to 5 passing a No. 8 sieve.

G. Sand: ASTM C33; Clean, general purpose sand, free of organic and deleterious materials.

H. Geotextiles: Subsurface drainage geotextile and separation geotextile.

I. Geogrid.

J. Controlled Low-Strength Material.

1.3 EXCAVATION

A. Explosives: Not allowed.

1.4 FIELD QUALITY CONTROL

A. Special Inspector and Testing Agency: Owner engaged.

<u>LESSONS LEARNED</u>

2.1 During the design process, several professionals on the Design Team might need to revise this section to coordinate Specification Sections within the project manual. Besides input from the Architect and the Geotechnical Engineer, the Civil, Structural, Mechanical, Plumbing, and Electrical Engineers might share editing and review obligations. Each Design Professional's responsibilities and scope of service depends on the agreement with the Prime Consultant or the Owner.

A. Assigning specification-review responsibility can be overlooked during the design process. Review may be inferred or expected without expressly stating this in the various agreements, particularly where the agreement is directly with the Owner. Clearly delineate the responsibilities for editing and reviewing this Section in consultants' agreements.

2.2 A dewatering system should be designed to keep the excavation continuously stable and dry. For deep excavations, ground-water extraction must be carefully controlled. For this purpose, piezometers measuring hydrostatic pressure are installed at various depths in sufficient number to detect the important piezometric water level changes resulting from removing the ground water.

2.3 Adjacent Structures: Occasionally, settlement of adjacent structures might be attributed to dewatering. Existing structures founded on weak, compressible soils or on saturated, loose sand could settle. The condition of structures, type of foundation, and water table elevations immediately adjacent to the project should be determined before dewatering. If dewatering and excavation will lower the water table significantly at such structures, underpinning precautions may be necessary.

2.4 Typically, the type of damage produced by dewatering is caused by settlement, particularly differential settlement. Settlement under walls, foundations, and stone and concrete masonry can cause cracking in these structures and in finishes. Buildings with deep foundations will usually be less affected by dewatering than those with shallow foundations; older buildings are usually more affected than newer ones.

END OF SECTION

THIS PAGE HAS BEEN INTENTIONALLY LEFT BLANK.

32 DIVISION

EXTERIOR IMPROVEMENTS

TABLE OF CONTENTS

DIVISION 32: EXTERIOR IMPROVEMENTS

321216	Asphalt Paving
321313	Concrete Paving
321314	Pervious Concrete Pavement
321443	Porous Unit Paving
321816	Playground Surfacing
323113	Fences and Gates
329200	Turf and Grasses

SECTION 321216

ASPHALT PAVING

GENERAL ***GUIDELINES***

1.1 SECTION INCLUDES

A. Qualitative requirements for base course and pavements above base course including conventional pavements for walks, roads, parking lots, and recreation areas. Also includes bituminous base courses, bituminous binder courses, and bituminous surface courses; tack coats.

1.2 QUALITY ASSURANCE

A. Road and paving materials and methods shall be in accordance with the State of Ohio Department of Transportation (ODOT), "Construction and Material Specifications", latest edition.

B. Pavement markings within public right-of-ways shall be in accordance with US Manual on Uniform Traffic Control Devices.

1.3 COMPACTED AGGREGATE

A. Aggregate base shall consist of stone, gravel, or slags with composition and gradation described as "Item 304," and conforming to requirements of 703.04 of the State of Ohio Department of Transportation (ODOT), "Construction and Material Specifications."

1.4 PAVING MATERIALS

A. Bituminous Base Course: ODOT "Item 301".

B. Binder Course Asphalt Concrete: ODOT "Item 448".

C. Surface Course Asphalt Concrete: ODOT "Item 448".

D. Tack Coat: Emulsified asphalt.

1.5 AUXILIARY MATERIALS

A. Paving Geotextile: Non-woven polypropylene.

B. Pavement-Marking Paint.

C. Wheel Stops: Precast concrete or solid, recycled plastic with galvanized-steel dowels.

1.6 FIELD QUALITY CONTROL

A. Testing: By Owner-engaged agency.

END OF SECTION

SECTION 321313

CONCRETE PAVING

GENERAL GUIDELINES

1.1 SECTION INCLUDES

A. Qualitative requirements for rigid cement concrete pavements above base course including conventional and modified pavements for walks, roads, parking lots, and service areas.

1.2 QUALITY ASSURANCE

A. Quality Standard: ACI 301.

1.3 MATERIALS

A. Concrete: ASTM C 150.
1. Normal-weight aggregate.
2. Air-entraining admixture.
3. Color pigment (optional).
4. Finish: Broom finish.

B. Wire Mesh: Welded plain steel wire fabric.

C. Reinforcing Bars: Deformed steel bars.

D. Fabricated Bar Mats: Steel bar or rod mats.

E. Joint Dowel Bars: Plain steel bars.

F. Detectable Warnings.

G. Fiber Reinforcement: Synthetic fiber.

1.4 FIELD QUALITY CONTROL

A. Testing: By Owner-engaged agency.

END OF SECTION

SECTION 321314

PERVIOUS CONCRETE PAVEMENT

GENERAL GUIDELINES

1.1 SECTION INCLUDES

A. Qualitative requirements for pervious concrete paving.

1.2 QUALITY ASSURANCE

A. State of Ohio Department of Transportation (ODOT), "Construction and Material Specifications".

B. ACI 522R-06 Pervious Concrete

C. ACI 522.1-08 Specification for Pervious Concrete Pavements

1.3 PRODUCTS

A. Stormwater Detention Layer or Groundwater Recharge Bed
1. Test Subgrade
a. Field Method: ASTM D 3385.
2. Coarse Aggregate for Stormwater Detention Layer: ODOT Item 703.1, AASHTO size No. 2.
3. Choker Base Coarse Aggregate for Stormwater Detention Layer: ODOT Item 703.1, AASHTO size No. 57.
4. Impervious Liner.
5. Filter Fabric.
6. Isolation Joint Material.
7. Curing Materials.

B. Pervious Concrete Pavement
1. Cement: ASTM 150 or ASTM C 595.
2. Supplementary Cementitious Materials
a. Fly Ash
b. Ground Granulated Blast-Furnish Slag.
3. Admixtures
a. Air Entraining Admixture.
b. Chemical Admixtures
1) Mid-range water reducing admixtures or high range water-reducing admixtures.
2) Extended set control admixtures or water-reducing/retarding admixtures.
3) Viscosity modifying admixtures.
4. Aggregates for Pervious Concrete: ASTM C33 and ODOT Item 703.02, No. 67, 7, 8, and 89 or 9.
5. Water.
6. Mixture Proportions: Appendix 6 of ACI 211.3R.

1.4 FIELD QUALITY CONTROL
A. Owner engaged.

LEED SUGGESTIONS

2.1 Pervious Paving: Credit for Sustainable Sites, SS 6.1 for stormwater design awards one point for stormwater management practices that reduce runoff to meet certain criteria. Pervious paving can be used as part of a stormwater management design to obtain this point.

LESSONS LEARNED

3.1 Pervious paving, also called porous paving, gap-graded paving, permeable paving, or enhanced porosity paving, can be used as part of a stormwater management design to reduce stormwater runoff and replenish aquifers.

3.2 Most concrete paving is produced from dense mixes of well-graded aggregate sizes that interlock with each other, making a stable low-porosity mass. This paving is designed to shed rather than absorb water. Pervious paving uses an open-graded aggregate mix with a large percentage of one-sized coarse aggregate, also called gap-graded or uniformly graded aggregate. Fine aggregates are typically not used in the mixes. The course of porous paving is placed over a reservoir of uniformly graded clean aggregate. Stormwater flows through the pervious paving into the reservoir, which has about 40% voids to store runoff and allow it time to infiltrate through subgrade soils.

3.3 Because paving structures that absorb or allow passage of water are fairly sophisticated systems, care must be taken in their design, detailing, and construction. If subgrades do not drain quickly enough under cold conditions, trapped water may freeze and damage paving. Passage of water may also allow more dissolved salts to reach embedded reinforcing, thereby increasing the opportunity for salt damage.

END OF SECTION

SECTION 321443

POROUS UNIT PAVING

GENERAL GUIDELINES

1.1 SECTION INCLUDES

A. Qualitative requirements for porous paving consisting of concrete pavers set in aggregate setting beds.

1.2 MATERIALS

A. Concrete Grid Pavers.

B. Solid Interlocking Concrete Pavers of shapes that provide openings between units.

C. Edge Restraints: Plastic or aluminum.

D. Curbs: Precast concrete.

E. Graded Aggregate for Subbase: Open graded for stormwater storage.

F. Graded Aggregate for Base: Well graded.

G. Leveling Course: Sand or crushed stone.

H. Paver Fill: Crushed stone.

LEED SUGGESTIONS

2.1 Porous paving can reduced stormwater runoff, compared to nonporous paving, by increasing infiltration. The effectiveness of porous paving for providing stormwater infiltration can be further increased by providing a highly porous base course, and possibly subbase, to store stormwater until the underlying soil can absorb it. Stormwater runoff carries pollutants from paved surfaces directly into streams and scours exposed soil surfaces, causing silt buildup downstream and degrading water quality. Infiltrated stormwater is filtered by subsurface soil layers, removing pollutants. It also recharges aquifers, resulting in steadier stream flows; peak flows are absorbed and then released during times of low flow. Porous paving may also help reduce heat buildup resulting from the absorption of solar energy by pavement materials, thereby helping to reduce the urban heat island effect.

2.2 LEED Credit SS 6.1 provides one point for stormwater management practices that reduce runoff to meet certain criteria, and LEED Credit SS 6.2 provides one point for removing suspended solids and phosphorous from stormwater runoff. Porous paving can be used as part of a stormwater management design that can obtain both of these points. LEED Credit SS 7.1 also provides a point for using an open-grid paving system that is less than 50% impervious for at least 50% of the parking lot area. Although porous pavers are more than 50% impervious, using them for more than 50% of the parking lot area can provide an equivalent pervious area, which complies with the intent of the credit.

LESSONS LEARNED

3.1 Traffic loads are usually a primary design consideration. Where light loads are expected, such as in parking areas and possibly including access aisles, grid-type pavers that will allow maximum water infiltration may prove suitable. Where heavy vehicular loads are expected such as in drive aisles, especially those that will carry frequent truck traffic, solid paving or porous paving with minimal open area may be required.

3.2 Consider snow removal needs; critical areas that must be kept clear of snow at all times might better be paved with a smooth material such as concrete or asphalt.

3.3 Subgrade preparation is also important for a successful installation. Remove vegetation and organic materials from the area to be paved. Remove soft spots containing poor subgrade material, and refill them with suitable material properly compacted. Refer to the project's geotechnical report for specific compaction requirements.

3.4 Drainage: Surface and subsurface drainage is of major importance. Exterior paving is usually sloped at least 1/4 inch per foot (2%), but porous pavers may be sloped as little as 1/8 inch per foot (1%). Porous paving should typically have at least a minimal slope so that during heavy rains, when water cannot infiltrate the paving as fast as it falls, water will not build up on the surface. Paving should be sloped away from buildings, retaining walls, and other elements capable of collecting surface water. Localities with impervious soils may require subsurface drains to allow excess water to flow out of the subbase and base course.

END OF SECTION

SECTION 321816

PLAYGROUND SURFACING

GENERAL GUIDELINES

1.1 SECTION INCLUDES

A. Qualitative requirements for surfaces for exterior recreational activities.

1.2 QUALITY ASSURANCE

A. Impact Attenuation: According to ASTM F 1292.

B. Accessibility of Surface Systems: According to ASTM F 1951.

C. Minimum Characteristics for Organic Loose-Fill Surfaces: According to ASTM F 2075.

1.3 PLAYGROUND SURFACE SYSTEMS

A. ***Provide one or a combination of the following:***

1. Organic Loose-Fill Surface, Engineered Wood Fibers: Random-sized wood fibers, in manufacturer's standard fiber size, approximately 10 times larger than wide; containing no bar, leaves, twigs, or foreign or toxic materials according to ASTM F 2075; graded according to manufacturer's standard specification for material consistency for playground surfaces and for accessibility according to ASTM F 1951.

2. Unitary synthetic poured rubber seamless surface: Poured-in-place, two-layer system with wearing course over cushion course. Provide manufacturer's standard thickness for each layer as required for overall thickness indicated, tested for impact attenuation according to ASTM F 1292 and for accessibility according to ASTM F 1951.

a. Wearing Course: Formulation of EPDM rubber particles, with minimum of 20 percent and maximum of 26 percent of ethylene propylene-diene-saturated polymethylene main chain along with other organic and inorganic components.

b. Cushion Course: Manufacturer's standard formulation of SBR particles and polyurethane, site mixed and applied.

B. Accessories

1. Edgings.
2. Stabilizing Mats.
3. Drainage / Separation Geotextile.
4. Weed-Control Barrier.

LESSONS LEARNED

2.1 Organic loose-fill systems include wood chips, wood mulch, and engineered wood fibers and should be installed over graded soil or compacted drainage fill with an interlayer of geotextile fabric that may also include premolded drainage matrix. The perimeter curb of the playground surface usually contains the loose material within the equipment area. Engineered wood fibers should be tested according to ASTM F 2075, Specification for Engineered Wood Fiber for Use as a Playground Safety Surface under and around Playground Equipment, for the presence of contaminants such as toxic substances and for consistently sized wood particles. Wood-based, loose-fill materials are flammable and subject to compaction, decomposition, and pulverization. This surface is less abrasive than sand and not as likely to be fouled by animals.

2.2 Manufacturers test the resilience of their products according to ASTM F 1292. Loose-fill sand, gravel, wood chips, and wood mulch are not furnished by playground surface system manufacturers, so product testing is not done for specific CH design depths. Field testing according to ASTM F 1292 can also be done at the completion of installation or periodically during the service life of the installation to verify performance.

A. The International Play Equipment Manufacturers Association provides a third-party product certification service to validate a member manufacturer's certification of compliance with ASTM F 1292.

2.3 Testing for accessibility is done according to ASTM F 1951, Specification for Determination of Accessibility of Surface Systems under and around Playground Equipment. This standard is designed to measure the amount of effort required to propel a wheelchair across the surface for straight and turning movement. The test is primarily directed at loose-fill surfaces to show comparison with the same movements over a smooth, hard surface. Some loose-fill systems will require additional surface mats over the accessible route to play equipment required by the Americans with Disabilities Act (ADA) to meet this standard. Accessible routes are also discussed in 36 CFR 1191, Americans with Disabilities Act (ADA) Accessibility Guidelines; Play Areas. Sloping surfaces should be limited to 2%.

2.4 Testing loose-fill wood systems for the presence of toxic substances such as heavy metals, metal scraps such as nails, and correct particle size is done according to ASTM F 2075. This test is done by engineered wood fiber manufacturers but is not generally conducted for wood chips or wood mulch.

END OF SECTION

SECTION 323113

FENCES AND GATES

GENERAL ***GUIDELINES***

1.1 SECTION INCLUDES

A. Qualitative requirements for fences for protective, security, and right-of-way purposes; also pipe gates.

1.2 QUALITY ASSURANCE

A. Comply with Chain Link Fence Manufacturers Institute “Product Manual”.

1.3 MATERIALS

A. Fabric: ASTM A 392, CLFM 1 CLF 2445
1. Aluminum-coated steel, ASTM A 491, Type I, 0.40 ounce per square foot.
2. Size: 2 inch mesh, 9 gauge steel.

C. Framework: ASTM F 1043.

D. Gates: Swinging type.
1. Chain link pedestrian (single gate leaf) and vehicular (double gate leaf with gate keepers).
2. Pipe gate.
3. Mechanical yard gate.

E. Framing and Fittings: ASTM F 626.

END OF SECTION

SECTION 329200

TURF AND GRASSES

GENERAL GUIDELINES

1.1 SECTION INCLUDES

A. Qualitative requirements for application of seed, sod, or plants; fertilizer; lime and mulch; and maintenance until acceptance.

1.2 QUALITY ASSURANCE

A. Topsoil Analysis: Furnish a soil analysis made by a qualified independent soil testing agency stating percentages or organic matter, inorganic matter (silt, clay, and sand), deleterious material, pH, and mineral and plant nutrient content of topsoil.

1.3 MAINTENANCE

A. Begin maintenance of lawns immediately after each area is planted and continue until acceptable lawn is established, but not for less than the following periods:
1. Seeded Lawns: 60 days after date of Contract Completion.
a. When full maintenance period has not elapsed before end of planting season, or if lawn is not fully established at that time, continue maintenance during next planting season.
2. Sodded Lawns: 30 days after date of Contract Completion.

1.4 MATERIALS

A. Seed or Turfgrass Sod

B. Planting Soils

C. Mulch

D. Erosion-Control Materials

E. Grass-Paving Materials

LEED SUGGESTIONS

2.1 Grass paving is cellular, three-dimensional "eggcrate" matting specifically designed for locations load-bearing strength for occasional vehicular or heavy pedestrian traffic on turfgrass is anticipated. It will protect vegetation root systems from soil compaction that can restrict growth or kill plants. To obtain higher load-bearing capability, these units are often installed over a specially prepared base course as determined by the manufacturer. Load-bearing capacity can exceed 5000 psi (34.5 MPa).

2.2 Seldom-used "green-space" areas for overflow parking or fire lines are good use for grass paving. Where anticipated loads are significant or greater traction is needed, the use of concrete grid-type pavers should be considered.

END OF SECTION

33 DIVISION UTILITIES

TABLE OF CONTENTS

DIVISION 33: UTILITIES

330513	Manholes and Structures
331000	Water Utilities
333000	Sanitary Sewerage Utilities
334000	Storm Drainage Utilities
334600	Subdrainage

SECTION 330513

MANHOLES AND STRUCTURES

GENERAL ***GUIDELINES***

1.1 SECTION INCLUDES

A. Qualitative requirements for manufactured units and components for utility services including hydrants, manholes, meters, utility boxes, and valves.

1.2 HYDRANTS

A. Yard Hydrants: As approved by Local Fire Department.

1. Hydrants within 20 feet of playgrounds shall be protected.

1.3 MANHOLES

A. Precast Concrete Manholes: ASTM C 478.

B. Manhole Steps: Ductile iron, cast aluminum, or steel reinforced plastic.

C. Drainage castings: Gray iron, ASTM A 48, Class 35 B to meet or exceed AASHTO axle loading specifications for specific site location, with lettering. Lettering shall be “STORM” or “SANITARY” as applicable.

1.4 METERS

A. Water Meter: AWWA C700 or utility company water meter.

B. Meter Box: Cast iron body and cover with lettering.

1.5 UTILITY BOXES

A. Valve Pits and Meter Pits: Reinforced concrete with ladder and cast iron manhole frame and cover.

1.6 VALVES

A. Nonrising stem gate valves 3 inches and larger, AWWA C500.

B. Rising stem gate valves 3 inches and larger, AWWA C500 or AWWA C509.

C. Nonrising stem gate valves 2 inches and smaller, MSS SP-80.

D. Valve Accessories: Cast iron valve boxes, curb stops, and service boxes for curb stops.

E. Tapping sleeve and tapping valve for new connections larger than 2 inches.

F. Service clamps and corporation stops for new connections 2 inches and smaller.

END OF SECTION

SECTION 331000

WATER UTILITIES

GENERAL ***GUIDELINES***

1.1 SECTION INCLUDES

A. Qualitatitve requirements for site water distribution systems for domestic consumption, fire fighting, and irrigation.

1.2 SYSTEM PERFORMANCE REQUIREMENTS

A. Minimum Working Pressures: The following are minimum pressure requirements for piping and specialties, unless otherwise indicated:
   1. Potable Water Service: 160 psig (1100 kPa).
   2. Fire Protection Water Service: 150 psig (1035 kPa).
   3. Fire Protection Water Service, Downstream from Fire Department Connections: 250 psig (1725 kPa).

1.3 QUALITY CONTROL

A. Comply with NSF 61, “Drinking Water System Components - Health Effects,” for materials for potable water.

B. Comply with NFPA 24, “Installation of Private Fire Service Mains and Their Appurtenances,” for materials, installation, tests, flushing, and valve and hydrant supervision.

C. Water main testing shall be performed in accordance with local agency jurisdiction. Pressure testing – comply with AWWA (American Water Works Association) guidelines.

D. Utility Compliance: Comply with regulations pertaining to water distribution systems.

1.4 MATERIALS

A. Ductile Iron Pipe 4 to 12 Inches: AWWA C151, Class 52 minimum.
   1. Lining: AWWA C104, cement mortar, seal coated.
   2. Gaskets: AWWA C111.
   3. Ductile iron and cast iron fittings, AWWA C110 or AWWA C153, 250 psi minimum pressure rating; AWWA C104 cement mortar lining; AWWA C111 rubber gaskets.

B. Ductile Iron Pipe Greater Than 12 Inches: AWWA C151, Class 51 minimum.
   1. Lining: AWWA C104, cement mortar, seal coated.
   2. Gaskets: AWWA C111.
   3. Ductile iron and cast iron fittings, AWWA C110 or AWWA C153, 250 psi minimum pressure rating; AWWA C104 cement mortar lining; AWWA C111 rubber gaskets.

C. Couplings: ASTM A 126, gray iron sleeve assembly with followers, rubber gaskets, bolts, nuts, and enamel paint finish.

D. Valves
1. Nonrising stem gate valves 3 inches and larger, AWWA C500.
2. Rising stem gate valves 3 inches and larger, AWWA C500 or AWWA C509.
3. Nonrising stem gate valves 2 inches and smaller, MSS SP-80.
4. Valve Accessories: Cast iron valve boxes, curb stops, and service boxes for curb stops.
5. Tapping sleeve and tapping valve for new connections larger than 2 inches.
6. Service clamps and corporation stops for new connections 2 inches and smaller.

E. Anchorages
1. Clamps, Straps, and Washers: ASTM A 506, steel.
2. Rods: ASTM A 575, steel.
3. Rod Couplings: ASTM A 197, malleable iron.
4. Bolts: ASTM A 307, steel.
5. Cast Iron Washers: ASTM A 126, gray iron.
6. Concrete Reaction Backing: ASTM C 150, Type I Portland cement for 3000 psi, 28-day minimum compressive strength.

F. Fire Service Main Accessories
1. Hose House: 16 gauge steel with red baked enamel finish, hoses, and nozzles.
2. Alarm Devices: UL 753 and FM approved including water flow indicators, supervisory switches, and pressure switches.

END OF SECTION

SECTION 333000

SANITARY SEWERAGE UTILITIES

GENERAL ***GUIDELINES***

1.1 SECTION INCLUDES

A. Qualitative requirements for site sanitary sewerage construction to buildings and municipal sanitary mains.

1.2 PERFORMANCE REQUIREMENTS

A. Gravity Flow, Nonpressure Piping Pressure Ratings: At least equal to system test pressure.

B. Force Main Pressure Ratings: At least equal to system operating pressure, but not less than 150 psig (1035 kPa).

1.3 PIPE AND FITTINGS

A. Provide one of the following for Gravity Systems:
   1. PVC Sewer Pipe and Fittings: ASTM D 3034, SDR 35 for solvent cement or elastomeric gasket joints.
   2. Reinforced Concrete Sewer Pipe and Fittings: ASTM C 76, Class III, Wall B, for rubber gasket joints.
   3. ABS Sewer Pipe and Fittings: ASTM D 2751, for solvent cement or elastomeric gasket joints (4 and 6 inch only).
   4. Gaskets: Compatible with pipe materials joined.

B. Provide the following for Forced Main Systems:
   1. Piping shall be PVC D18, Class 150, C-900 AWWA piping with push-on joints. Piping and fittings shall meet ASTM D 1784 and ASTM 3139.

1.4 MANHOLES

A. Precast Concrete Manholes: ASTM C 478.

B. Manhole Steps: Ductile iron, cast aluminum, or steel reinforced plastic.

C. Manhole Frames and Covers: ASTM A 536, Grade 60-40-18, heavy duty-ductile iron with lettering.

1.5 CLEANOUTS

A. PVC with cast iron adapter.

END OF SECTION

SECTION 334000

STORM DRAINAGE UTILITIES

GENERAL GUIDELINES

1.1 SECTION INCLUDES

A. Qualitative Requirements for:
1. Site storm drain construction to buildings and municipal storm drainage.
2. Storm drainage piping for surface, or a combination of surface and subsurface water.
3. Structures for access to underground pipe.
4. Conduit, chambers, and units for drain pipe, catch basins, inlets, and underground water detention chambers.

1.2 PIPE AND FITTINGS

A. Provide one of the following:
1. Ductile Iron Pressure Pipe: AWWA C151, Class 52 for push-on joints.
2. Reinforced Concrete Sewer Pipe and Fittings: ASTM C 76, Class III, Wall B, for rubber gasket joints.
3. Polyvinyl Chloride (PVC): ASTM D 3034, SDR 35, or ASTM F 949 for solvent cemented or gasketed joints.
4. Aluminized Steel: Type 2 per AASHTO M36 or ASTM A 760 with gasketed joints or bell and spigot joints.
5. Polyethylene Pipe: AASHTO M252 or M294; Type S or Type SP ***or ASTM F 2648; solid or perforated.***
6. Polypropylene (PP) Corrugated Wall Stormwater Collection Chambers: ASTM F 2418.

B. For diameter greater than 24 inches, pipe shall be concrete, aluminized steel, or HDPE.

1.3 CLEANOUTS

A. Cast iron.

1.4 CATCH BASINS FOR STORM SEWERAGE SYSTEM

A. Precast Concrete Catch Basins: ASTM C 478 or ASTM C 858.

B. Catch Basin Steps: Ductile iron, cast aluminum, or steel reinforced plastic.

C. Catch Basin Frames and Grates: ASTM A 536, Grade 60-40-18, heavy-duty ductile iron.

D. PVC plastic body catch basins: H-20 DOT rated for roadway applications with a minimum 6" concrete collar and ductile iron frame and grate and meet all applicable ASTM standards and environmental regulations.

1.5 DRAINAGE STRUCTURES

A. Curb Inlets: Precast concrete, stone, or brick conforming to utility standards.

B. Outfalls for Storm Sewerage System: Cast-in-place reinforced concrete pipe, head wall apron, tapered sides, and rip rap.

C. Dry Wells for Storm Sewerage System: ASTM C 858, precast reinforced perforated concrete rings with cast-in-place concrete floor and lift-off concrete cover.

D. Slot Drain: Interlocking precast polymer concrete modular units with grates, channel caps, and related accessories.

E. Stormwater Collection Chambers: Polypropylene (PP) chambers with open bottom, buried chambers of corrugated wall construction used for collection, detention, and retention of stormwater runoff per ASTM F2418.

F. Curb inlets: PVC plastic body catch basins: H-20 DOT rated for roadway applications with a minimum 6" concrete collar and ductile iron frame and grate and meet all applicable ASTM standards and environmental regulations.

END OF SECTION

SECTION 334600

SUBDRAINAGE

GENERAL GUIDELINES

1.1 SECTION INCLUDES

A. Qualitative requirements for subdrains for interception and removal of water from pavements and structures.

1.2 SUBDRAINAGE

A. Drainage Pipe - ***Provide one of the following:***

1. Perforated PVC pipe, ASTM D 2729.
2. ***Perforated PE pipe, AASHTO M 252, Type SP or AASHTO M 294, Type CP.***
3. ***Solid Wall PVC pipe, ASTM D 3034.***
4. ***Solid Wall PE pipe, AAHSHTO M 252 or AASHTO M 294, Type S.***

B. Drainage Panels: Molded-sheet, mesh fabric or net fabric drainage panels.

C. Geotextile filter fabrics.

END OF SECTION

THIS PAGE HAS BEEN INTENTIONALLY LEFT BLANK.